Telehandler Service Manual

©2026 AXCS Equipment all rights reserved.

REVISION HISTORY

DATE	REVISION	SECTION	DESCRIPTION
June 2024	A	-	Original Issue
August 2026	B	ALL	• TH-1056 and TH-1256 models added • Deutz engine service manual added • Dana axle service manuals added • Maintenance, test and adjustment, and removal and installation procedures added for many components

READ FIRST

This manual provides detailed scheduled maintenance information for the machine owner and user. It also provides troubleshooting fault codes and repair procedures for qualified service professionals.

Basic mechanical, hydraulic and electrical skills are required to perform most procedures. However, several procedures require specialized skills, tools, lifting equipment and a suitable workshop. In these instances, we strongly recommend that maintenance and repair be performed at an authorized dealer service center.

Modification

Modifications to this machine may affect compliance with Industry Standards and/or Governmental Regulations. Any modification must be approved by AXCS.

CONTENT

1. SAFETY PRINCIPLE 6

1.1.Introduction 6
1.2.Safety Information 6
1.3.Operation Safety 7
1.4.Personel Safety 16
1.5.Workplace Safety 16
1.6.Maintenance Safety 16

2. SPECIFICATIONS & GENERAL INFORMATION 17

2.1.Serial Number Location 17
2.2.Orientation 18
2.3.Specification 18
2.4.Hydraulic Circuit 42
2.5.Fluid and Lubricant Capacities 42
2.6.Torque Charts and Specifications 44
2.7.Hydraulic Fittings 56

3. MAINTENANCE & INSPECTION SCHEDULES 57

3.1.Scheduled Maintenance 57
3.2.Filters, Belts & Parts to be Replaced 68
3.3.Boom Safety Prop 69
3.4.Maintenance Procedures 71
3.5.Transmission Maintenance and Oil Change 88
3.6. Pins and Composite Bearing Repair Guidelines 96
3.7.Tires and Wheels 97
3.8.Hydraulic Filter Replacement 98
3.9.Hidden Screen 100

4. TEST & ADJUSTMENT 104

4.1.Limit Values for Temperature and Pressure 104
4.2.Standart Specifications 110
4.3.Testing Procedure 123
4.4. Boom Chain Tension Adjustment 126
4.5. Implement Pump Pressure Checks and Adjustment 127
4.7.Hydraulic Tank Oil Draining 129
4.8.Hydraulic Tank Oil Filling 131

5. ELECTRICALS 132

5.1.Electrical Component Terminology 132
5.2.Harness Layout 133
5.3.Cabin Harnesses Layout 134

6. CONVERSION TABLE 145
7. STRUCTURE AND FUNCTION 153

7.1.Engine and Transmission Coupling 153
7.2. Power Train 155
7.3.Transmission 156
7.4.Hydraulic Pump 179
7.5.Valves 184
7.7.Hydraulic Tank 209
7.8.Air Conditioner 214

8. HYDRAULICS 229

8.1.Hydraulic Component Terminology....229
8.2.Pressure Specification....230

9.TROUBLESHOOTING....231

9.1.Engine Error Codes....231
9.2.Boom Troubleshooting....258
9.3.Axle Assembly and Drive Shaft Troubleshooting....260
9.4.Transmission Troubleshooting....268
9.5.Air Conditioner Troubleshooting....288

10.REMOVAL AND INSTALLATION....289

10.1.Wheels....289
10.2.Drive Shaft Assembly....291
10.3.Engine....300
10.4.Air Filter Assembly....312
10.5.Expansion Tank Replacement....315
10.6.Radiator Assembly Replacement....317
10.7.DEF Tank Replacement....323
10.8.Fuel Filters Replacement....328
10.9.Engine Exhaust System....333
10.10.Thermostat Replacement....335
10.11.Fuel Tank Replacement....337
10.12.Starter Replacement....341
10.13.Alternator Replacement....343
10.14.Water Pump Replacement....346
10.15.Hydraulic Tank Replacement....348
10.16.Implement Pump Replacement....351
10.17.Transmission....354
10.18.Hydraulic Valves....362
10.19.Hydraulic Cylinders....399
10.20.Boom....400
10.21.Rearview Camera (If Equipped)....412
10.22.Cab....414
10.23.Electrical Components....421
10.24.Stabilizer Assembly — Removal and Installation....423
10.25.Brake Accumulator And Pilot Supply Block....427
10.26.Counterweight....434

11.DISASSEMBLY AND ASSEMBLY....435

11.1.Axle Assembly....435
11.2.Transmission Assembly....855
11.3.Engine Assembly....998
11.4.Boom Assembly....1245

12.SCHEMATICS....1259

12.1.Electrical Schemas....1259
12.2.Hydraulic Schemas....1259

1. SAFETY PRINCIPLE

1.1.Introduction

This Service Manual contains general information on service and repair procedures. The procedures in this manual must be followed for personel safety and equipment safety. General safety rules to be followed when servicing the machine are included in this section. These instructions must be strictly followed and adhered to in their entirety to prevent damage to both the maintenance personel and the equipment. A maintenance program must be established and followed to ensure that the machine funtions safely. Read, understand and apply the information in this manual. Follow all safety procedures, practices, instructions, rules and laws.

1.2.Safety Information

The specific precautions to be observed during maintenance are inserted at the appropriate point in the manual. These precautions are generally those that apply when servicing electric, hydraulic, and larger machine component parts. To avoid possible death or injury, carefully read, understand and comply with all safety messages on the machine and in the Service Manual.

DANGER!

Indicates an imminent risk situation that, if not avoided, could result in death or serious injury.

WARNING!

Indıcates a potentially hazardous situation which, if not avoided, could result in death or serious injury.

NOTICE

Indicates a potentially hazardous situation which, if not avoid, could result in minor or moderate injury.

1.3.Operation Safety

General Safety

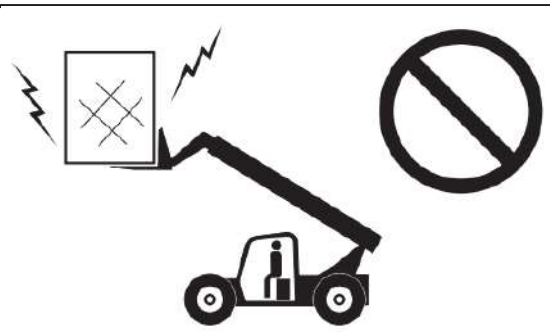	Always refer to the load capacity chart before lifting a load. Confirm that the load is within the rated capacity of the vehicle. Do not exceed the rated load.
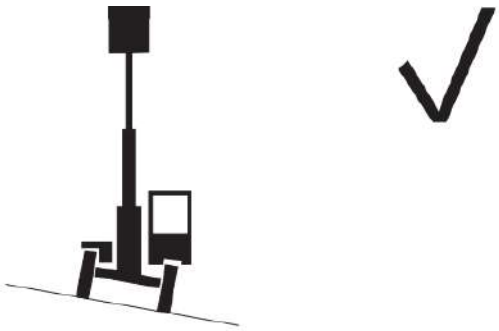	Be sure that the ground conditions are able to support the vehicle. The ground must have adequate strength to support the weight of the vehicle and the load it is carrying.
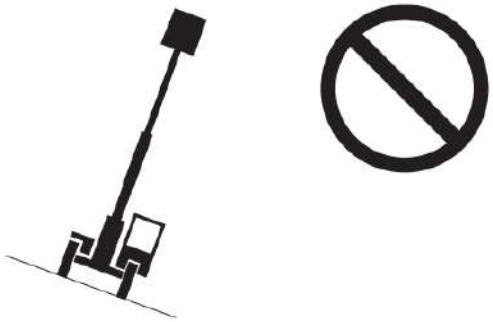	Do not raise the boom unless frame is levelled (0 degrees), unless otherwise noted on load capacity chart.
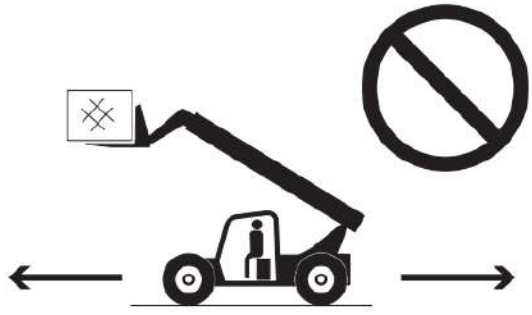	Do not drive the vehicle with the boom raised. Telescopic forklifts must always be driven with the boom lowered to ensure that the center of gravity of the vehicle and the load is as low as possible.

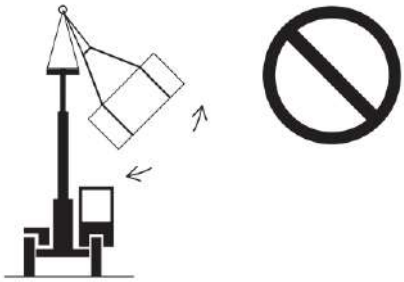	Do not lift a suspended load without the proper and legible load capacity chart for the attachment / telehandler combination you are using. Hence the load capacity charts are designed for only stationary loads, load capacity chart shown in the manual is not valid for suspended loads. Driving across grades, sudden starts, stops and turns can cause the load to swing and create a hazard if not externally stabilized.
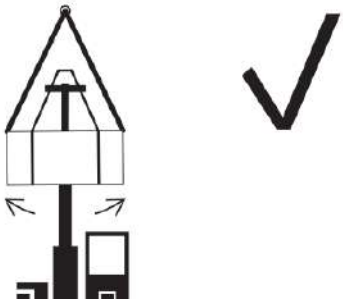	Do not permit the load to swing freely. Always use tag lines to restrict loads from swinging, to avoid overturn. Do not attempt to use frame - leveling to compensate for load swing.
	Do not lift personnel with this vehicle unless it is equipped with an approved work platform.
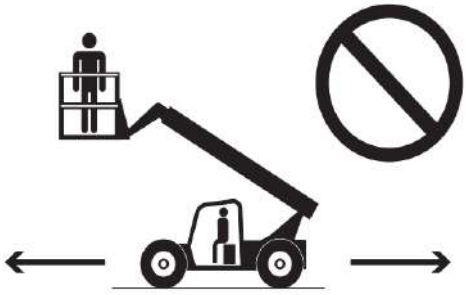	Even if you have an approved work platform, DO NOT drive vehicle while a personnel lifted.
	To maintain sufficient traction and braking capabilities, drive with forks pointed downhill when the vehicle is unloaded.

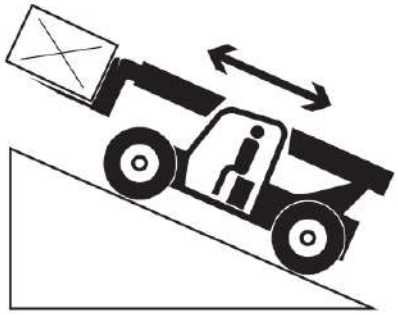	To maintain sufficient traction and braking capabilities, drive with the forks pointed uphill when the vehicle is loaded.
	To avoid over speeding, down shift to a lower gear and use the service brake as necessary to maintain a slow speed when driving down slopes. DO NOT shift into neutral when driving down slopes.
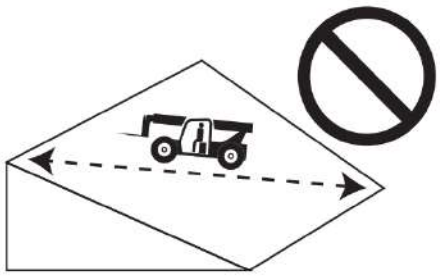	On steep terrain, drive only up and down a hill, and always keep the vehicle in gear. Do not turn across the slope when the vehicle is traveling up or down a slope.
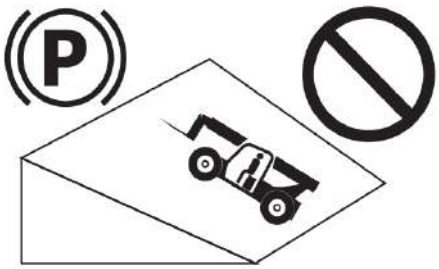	Do not park on a slope. A safe parking location - firm level surface, clear of obstruction and traffic must be selected.
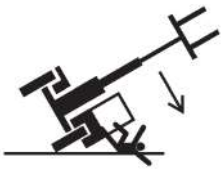	If the vehicle starts to rollover; - Do not jump out - Brace yourself and stay in the seat - Keep seat belt fastened - Hold on firmly - Lean away from the Point of impact

	Always wear a seat belt when operating the vehicle.
	Enter using the proper hand holds and steps provided. Always maintain 3-point contact getting on and off. Never grab control levers or steering wheel when mounting or dismounting the vehicle.
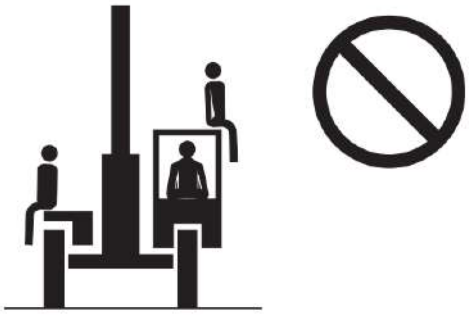	Do not carry riders. Riders could fall off vehicle causing death or serious injury.
	Maintain proper tire pressure at all times. If proper tire pressures are not maintained vehicle could rollover.
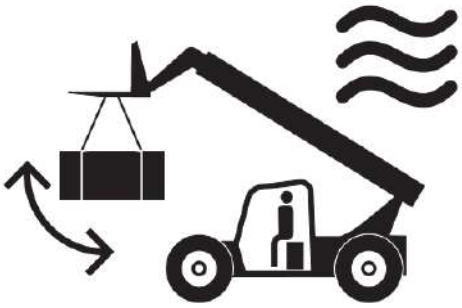	Do not operate the vehicle in strong or gusty winds. Also do not lift suspended loads when wind speeds can cause an unsafe situation.

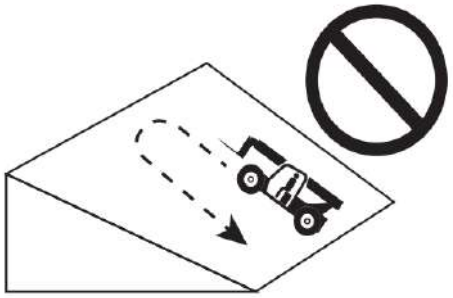	Avoid turning if possible and use extreme caution on grades, ramps and inclines. Normally travel straight up and down the slope.
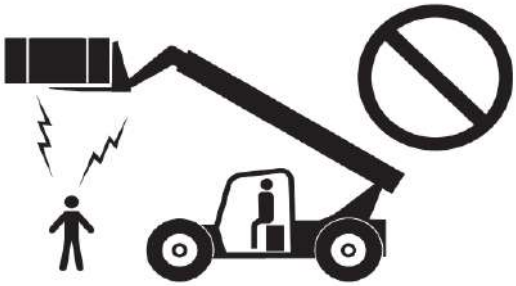	Keep people, equipment and material out of the work area. Do not operate the vehicle while people are under or near an elevated boom, whether it is loaded or unloaded.
	Do not smoke or allow any open flames in the area while checking or servicing hydraulic, battery or fuel systems; all contain highly flammable liquids or explosive gases, which can cause an explosion or fire if ignited.
	Do not remove the radiator cap when the engine is running hot or overheated. Coolant is extremely hot and under pressure and it can burn your skin.
	Some parts of the vehicle get hot during operation. Some parts can stay hot even after they are stopped. Check the surface temperatures before contacting. Always use protective gloves.

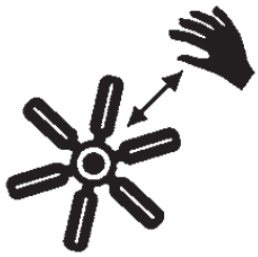	Do not open the engine hatch while the vehicle running. Some parts may continue to rotate even if the vehicle is stopped. Do not touch rotating parts on the vehicle.
	During loading and unloading measures such as exclusion zones or barriers, should be put in place to ensure that personnel are kept clear of falling loads.
	Keep the boom and load as low as practical while maintaining visibility in the direction of travel. Ask a signal person to assist with lifting the load if visibility will be obstructed at the point of operation.
	Always clean your footwear before operating the vehicle. Mud, oil, grease and other slippery substances on the footwear cause you to lose control of the vehicle.
	Do not operate the vehicle in hazardous environments unless approved for that purpose by AXCS and site owner. Sparks from the electrical system and the engine exhaust can cause an explosion.

	Do not fill the fuel tank or service the fuel system near an open flame, sparks or smoking materials. Engine fuel is flammable and can cause a fire and/ or explosion.
	Do not attempt to repair or tighten any hydraulic hoses or fittings while the engine is running or when the hydraulic system is under pressure.
	Do not use your hand to check for leaks. Use a piece of cardboard or paper to search for leaks. Wear gloves to protect hands from spraying fluid.
	Use the control levers and joystick only when you are sitting in the cab and in the correct position. Using the control levers outside the cabin may result in death or injury to you or others.
	Lack of communication could cause accidents. If two or more people are working at the same time on the vehicle, each one needs to be aware of what the other is doing. Before starting the engine, make sure that other users are not in dangerous areas.
	Always have an approved fire extinguisher within easy reach.

Electrical Hazards

This vehicle is not insulated and does not provide protection from contact or being near electrical current. Always check for power lines before raising the boom. Do not operate the vehicle during lightning or storms.

- If it is mandatory to use the vehicle near the power lines, call local authorities to de-energize power lines or take other suitable precautions.

- Keep away from the vehicle if it contacts energized power lines. Personnel on the ground or in the cab must not touch or operate the vehicle until energized power lines are shut off.

Line Voltage	Distance
0 to 50 kV	10 feet
>50 to 200 kV	17 feet
>200 to 350 kV	20 feet
>350 to 500 kV	27 feet
>500 to 750 kV	27 feet
>750 to 1000 kV	37 feet

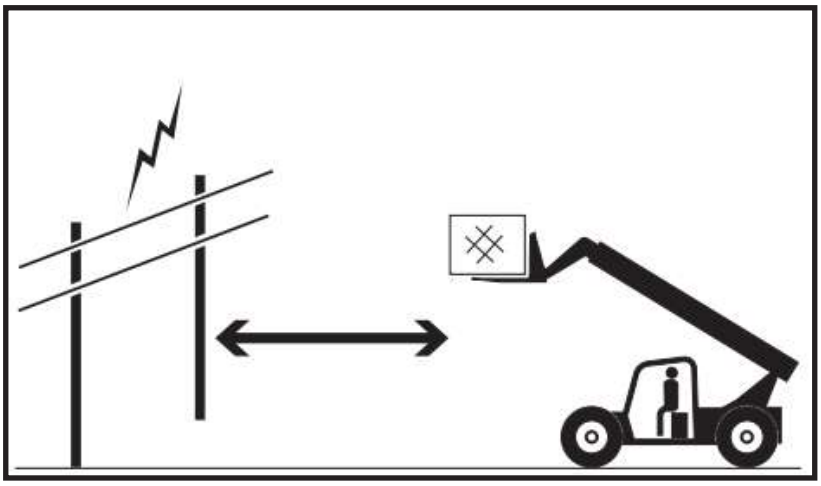

For power lines over 1000 kV, the minimum clearance distance must be established by the utility owner or operator or by a registered professional engineer who is a qualified person with respect to electrical power transmission and distribution.

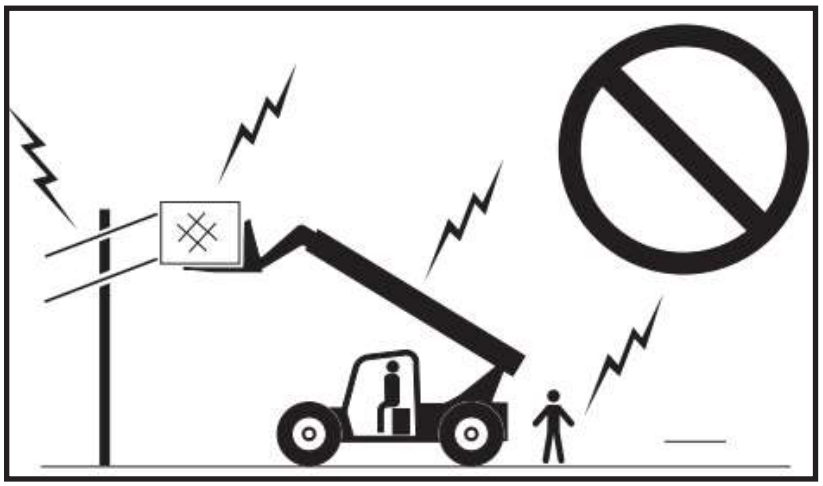

The minimum approach distance may be reduced if insulating barriers are installed to prevent contact, and the barriers are rated for the voltage of the line being guarded.

These barriers shall not be part of (or attached to) the vehicle. The minimum approach distance shall be reduced to a distance within the designed working dimensions of the insulating barrier. This determination shall be made by a qualified person in accordance with the employer, local, or governmental requirements for work practices near energized equipment.

DECALS

There are safety labels mounted on the machine. If you do not follow the instructions on these labels, you could be seriously injured or killed. Keep the labels clean. Replace worn, deformed labels.

CLOTHING

You may be injured if you do not wear appropriate clothing. Wear appropriate clothing and protective equipment fort he work being done. Hard hats, safety glasses, ear protection, industrial gloves and overalls must be used and worn appropriately.

LIFTING EQUIPMENT

Using incorrect lifting equipment can cause accidents resulting in serious injury or death. Make sure that all lifting equipment is suitable fort he job, in good condition and complies with all applicable requlations. Do not work under any elevated equipment.

DUTY and CARE

Be careful and alert at work You have a duty of care to yourself and your collagues to work safely.

CONTROLLER

If the vehicle on which the transmission is mounted is not checked before starting work, serious injury and death can result.

CONDITION

Do not use equipment with defective or missing parts.

ENGINE

Never open the engine cover while the engine running.

1.4.Personel Safety

Any person working on or around the machine must be aware of all known safety hazards associated with the machi

ne. Your top priority must be personal safety and the contiued safe operation of the machine.

- Wear and use all necessary protective equipment to complete the work safely.
- Always wear protective goggles when performing maintenance procedures.
- The caregiver wears all jewerly, rings, watches, etc. Must be remowed.
- Avoid loose hair and loose clothing that can get caught in the equipment.
- Never smoke during machine maintenance. Never refuel during electrical storms.

1.5.Workplace Safety

Flames, sparks and burning tobacco should be kept away from combustible materials such as battery gases and motor fuels. Alays keep an approved and working fire extinguisher within easy reach.

Ensure that all equipment, tools and work areas are properly maintained and ready for use. Keep work areas clean. Keep machine components free of debris that could cause damage.

Make sure that capacity of any overhead crane, forklift or any other lifting or supporting device is suitable fort he weight to be lifted. Use only chains or belts of sufficient capacity in good condition.

Old oils and other used liquids must be disposed of properly. Use an approved container for the disposal process. Please be environmentally safe in this regards. Ensure that your work area is properly ventilated and properly lit fort he working conditions.

1.6.Maintenance Safety

To avoid injury and damage, the work must be carried out by a qualified engineer. Perform maintenance only in areas in which you are competent.

Always use appropriate equipment to check for hydraulic leaks. Never work with bare hands. Remember that hydraulic fluid under pressure penetrates the skin. If hydraulic fluid penetrates your skin, seek medical attention immediately.

Oil is poisonous. If you swallow oil, do not vomit, seek medical advice as soon as possible. Some oils can cause cancer. Do not touch oil more than necessary. If your skin thats dirty, wash it immediately with warm soapy water or special cleansers.

Always use protective goggles, espacially when disassembling parts the may be subjected to spring pressure.

Clean parts with recommended solvents to avoid corrosion. Damaged, deformed or improperly installed O-Rings, gaskets and bolts can cause damage or possible accident. Unless otherwise specified, replace these parts when they fail.

2. SPECIFICATIONS & GENERAL INFORMATION

2.1.Serial Number Location

The serial number nameplate, located at the front left side of telescopic handler lists the following;

- Model Number
- Serial Number
- Engine Power
- Weight of the Vehicle
- Production Date

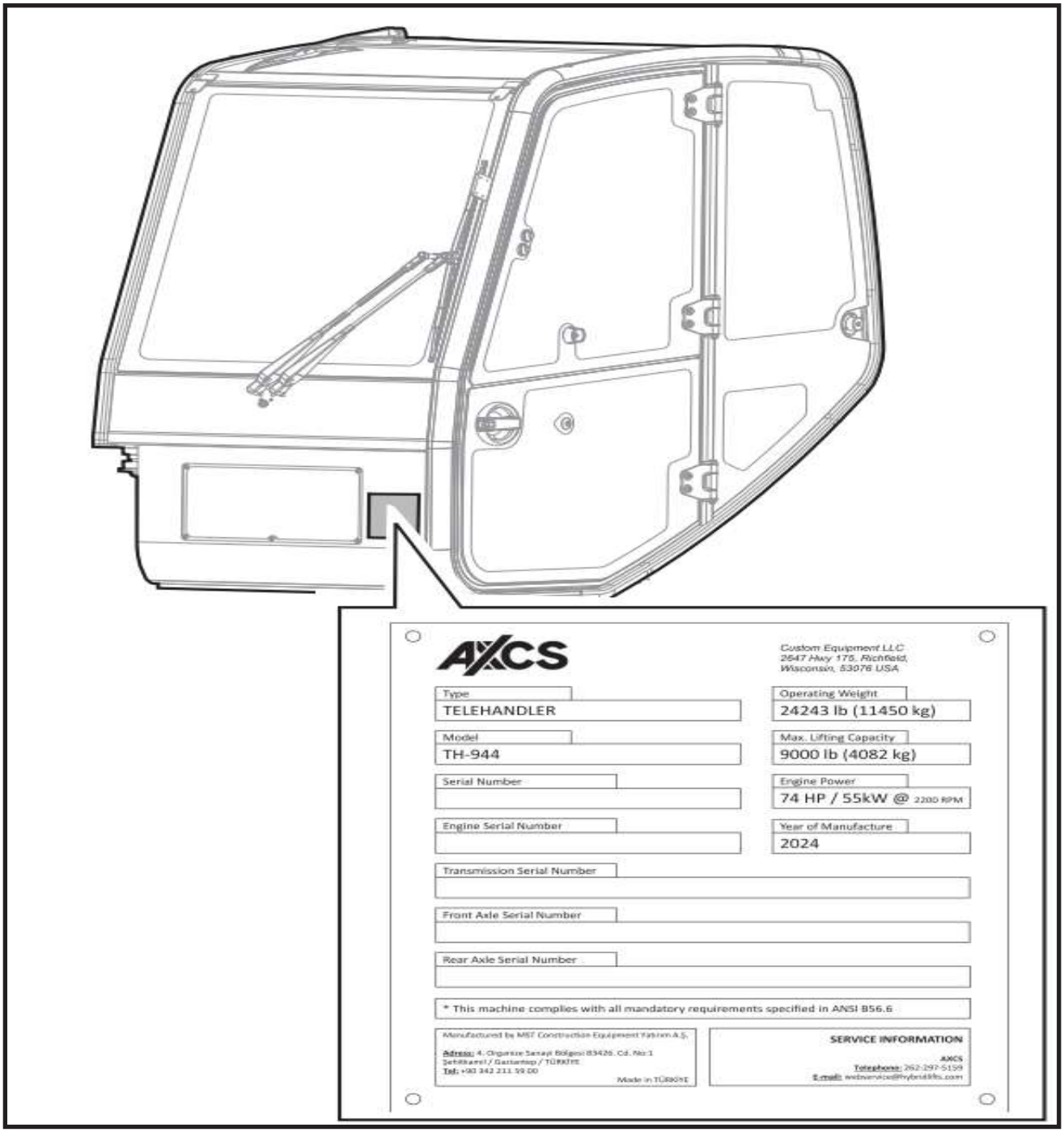

All after sales procedures are carried out with serial number of the vehicle.

2.2.Orientation

Right side, left side, front and rear are directional referances given from the operator's seat while facing in a forward direction.

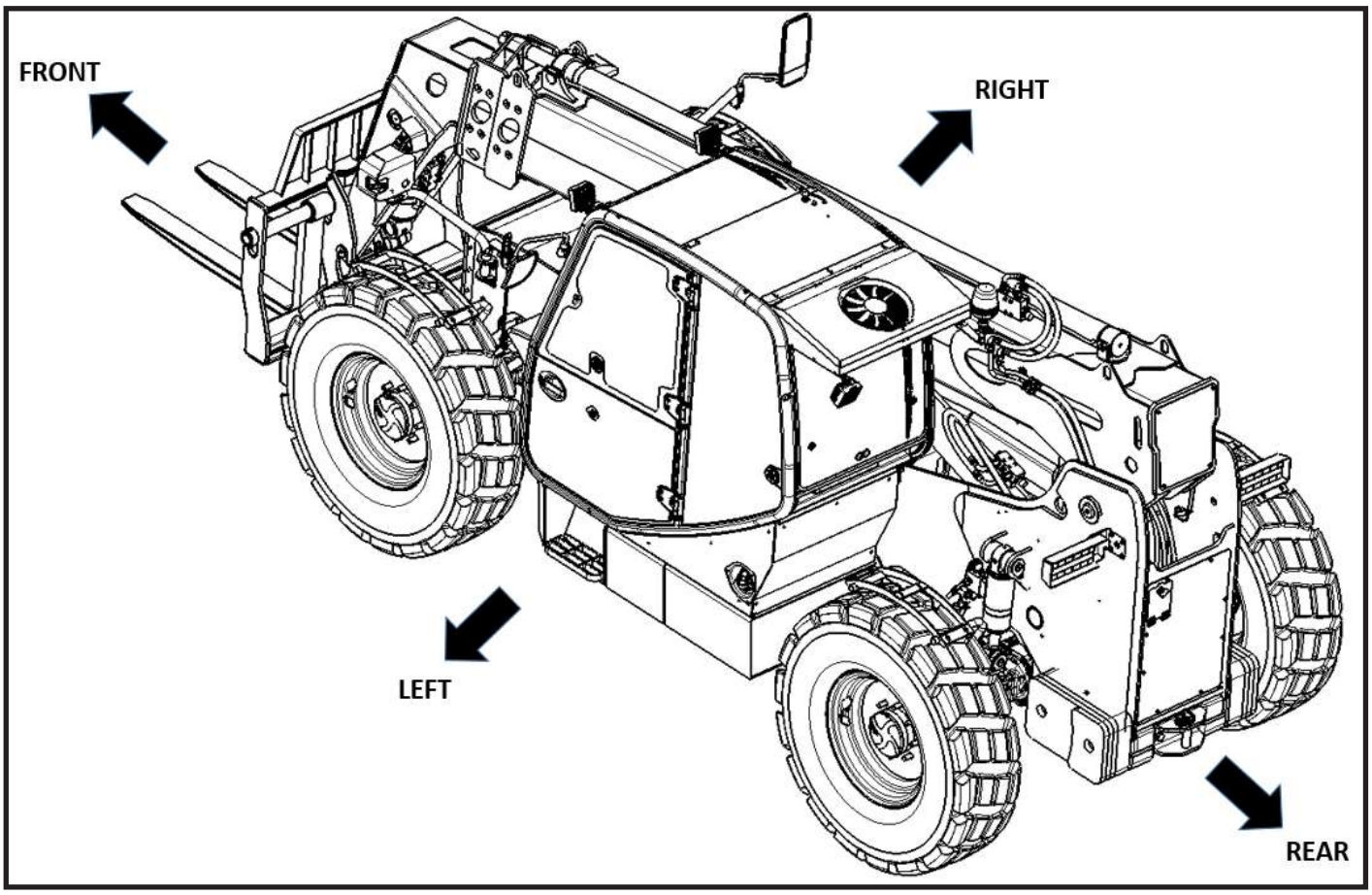

2.3.Specification

Technical Information

COMPONENTS	
PERFORMANCE	**TH-842**
Max. Lifting Capacity (lb) (kg)	8,000 lb (3.629 kg)
Max. Lifting Capacity at Full Height (lb) (kg)	6.000 lb (2.722 kg) (w/o stab)
Capacity at Max. Reach (lb) (kg)	1.200 lb (544 kg) (w/o stab)
Max. Lifting Height (ft) (mm)	42 ft (12.800mm)
Max. Horizontal Boom Extension (ft) (mm)	28 ft 9 in (8.756mm)
Boom Lifting Angle (º)	69º
Towable Trailer Weight (with / without Brake) (kg)	6614-30865 / (3000-14000 kg)
Frame Levelling (º)	±10º
Stabilizer	NO

BOOM CYCLE TIMES	
LIFTING	9.44 s
LOWERING	8.90 s
EXTENSION	13.81 s
RETRACTION	11.77 s
CROWD	3.05 s
DUMP	3.59 s
POWER TRAIN	
ENGINE	DEUTZ
MODEL	TCD 3.6 L4
EMISSION LEVEL	TIER 4F w/o DPF
NUMBER OF CYLINDERS	4
CUBIC CAPACITY	221 cu in (3621 ccm)
ENGINE POWER	75 hp / 55,4kW@2300rpm
ENGINE TORQUE	288 lb-ft (390Nm) @1300rpm
COMBUSTION SYSTEM	Commonrail-Direct Injection
COOLING SYSTEM	Water Cooled
TRANSMISSION	**Torque Converter**
HYDRODYNAMIC TRANSMISSION	CARRARO TCH90 PS
FRONT-REAR AXLE	DANA 212
GEARBOX SPEED	4F / 3R
MAX TRAVELLING SPEED	20 mph (32 km/h)
COMPONENTS	
STEERING MODES	2WS, 4WS, 4WS-CRAB
PARKING EMERGENCY BRAKE	Negative Parking Brake (SAHR)
BRAKE SYSTEM	FRONT/REAR MULTI DISC w/ OIL BATH
TIRE	14.00-24
HYDRAULIC SYSTEM	
MAIN CONTROL VALVE	“REXROTH SX14 S (ELECTRO-HY-DRAULIC CONTROL)”
PUMP	“REXROTH A10VO63LA, VARIABLE DISPLACEMENT (63 ccm)”
SYTEM PRESSURE	3481 psi (240 bar)
MAX FLOW	37 gal (140 l/min)

JOYSTICK CONTROL	DANFOSS 4 in 1 /w FNR, Up-Down-Shift
CAPACITIES	
HYDRAULIC TANK	40 gal (150 L)
FUEL TANK	40 gal (150 L)
OPERATING WEIGHT (WITHOUT LOAD, WITH FORKS)	23.920 lb (10.850 kg)
DIMENSIONS	
A. WHEELBASE	136 in (3450 mm)
B. OVERALL LENGTH TO FRONT FACE OF TIRE	200 in (5060 mm)
C. OVERALL LENGTH TO CARRIAGE	234 in (5955 mm)
D. GROUND CLEARANCE	17 in (430 mm)
E. INSIDE TIRE WIDTH	82 in (2080 mm)
F. OVERALL WIDTH	97 in (2465 mm)
G. OVERALL CAB WIDTH	38 in (971 mm)
H. OVERALL HEIGHT	100 in (2546 mm)
I. TOW BAR	3,5 in (90 mm)
J. TURNING RADIUS	57 in (1450 mm)
K. TURNING RADIUS	146 in (3697 mm)
STANDARD FORKS (mm)	4”X2”X48 (120x50x1200)
TILT ANGLE	122°
FRAME LEVELLING	± 0.4 in (± 10 mm)
NOISE LEVEL	
NOISE AT DRIWING POSITION	80 db(A)
NOISE TO ENVIRONMENT	102 db(A)

COMPONENTS

PERFORMANCE	**TH-944**	**TH-1044**
Max. Lifting Capacity (lb) (kg)	9,000 lb (4.082 kg)	10,000 lb (4.536 kg)
Max. Lifting Capacity at Full Height (lb) (kg)	7,000 lb (3.175 kg) (w/o stab)	7,000 lb (3.175 kg) (w/ stab)
Capacity at Max. Reach (lb) (kg)	1,100 lb (498 kg) (w/o stab)	2,700 lb (1.224 kg) (w/ stab)
Max. Lifting Height (ft) (mm)	44 ft (13.417mm)	44 ft 9 in (13.643mm)
Max. Horizontal Boom Extension (ft) (mm)	30 ft 10 in (9.415mm)	30 ft 10 in (9.415mm)
Boom Lifting Angle (º)	69º	69º

Towable Trailer Weight (with / without Brake) (lb/kg)	6600-30000 / (3000-14000)	
Frame Levelling (º)	±10°	
Stabilizer	NO	YES
BOOM CYCLE TIMES		
LIFTING	10.35 s	
LOWERING	10.27 s	
EXTENSION	17.61 s	
RETRACTION	16.21 s	
CROWD	3.61 s	
DUMP	4.08 s	
POWER TRAIN		
ENGINE	DEUTZ	
MODEL	TCD 3.6 L4	
EMISSION LEVEL	TIER 4F w/o DPF	
NUMBER OF CYL-INDERS	4	
ENGINE POWER	100 hp / 74.4kW@2300rpm (STD) 75 hp / 55.4kW@2300rpm (OPT)	
ENGINE TORQUE	302 lb-ft (410Nm) @1600rpm (STD) 288 lb-ft (390Nm) @1300rpm (OPT)	
COMBUSTION SYS-TEM	Commonrail-Direct Injection	
COOLING SYSTEM	Water Cooled	
TRANSMISSION		
HYDRODYNAMIC TRANSMISSION	CARRARO TCH90 PS	
FRONT-REAR AXLE	DANA 212	DANA 212HY
GEARBOX SPEED	4F / 3R	
COMPONENTS		
MAX TRAVELLING SPEED	20 mph (32 km/h)	
STEERING MODES	2WS, 4WS, 4WS-CRAB	
PARKING EMERGENCY BRAKE	Negative Parking Brake (SAHR)	
BRAKE SYSTEM	FRONT/REAR MULTI DISC w/ OIL BATH	
TIRE	14.00-24	
HYDRAULIC SYSTEM		
MAIN CONTROL VALVE	“REXROTH SX14 S (ELECTRO-HYDRAULIC CONTROL)”	
PUMP	“REXROTH A10VO63LA, VARIABLE DISPLACEMENT (63 ccm)”	
SYTEM PRESSURE	3481 psi (240 bar)	

MAX FLOW	37 gal (140 l/min)	
JOYSTICK CONTROL	DANFOSS 4 in 1 /w FNR, Up-Down-Shift	
CAPACITIES		
HYDRAULIC TANK	40 gal (150 L)	
FUEL TANK	40 gal (150 L)	
OPERATING WEIGHT (WITHOUT LOAD, WITH FORKS)	25,242 lb (11.450 kg)	27,117 lb (12.300 kg)
DIMENSIONS		
A. WHEELBASE (in) (mm)	136 (3450)	
B. OVERALL LENGTH TO FRONT FACE OF TIRE (in) (mm)	200 (5060)	
C. OVERALL LENGTH TO CARRIAGE (in) (mm)	243 (6174)	
D. GROUND CLEARANCE (in) (mm)	17 (430)	
E. INSIDE TIRE WIDTH (in) (mm)	82 (2080)	
F. OVERALL WIDTH (in) (mm)	97 (2465)	
G. OVERALL CAB WIDTH (in) (mm)	38 (971)	
H. OVERALL HEIGHT (in) (mm)	100 (2546)	
I. TOW BAR (in) (mm)	3,5 (90)	
J. TURNING RADIUS (in) (mm)	57 (1450)	
K. TURNING RADIUS (in) (mm)	146 (3697)	
STANDARD FORKS (mm)	4”X2”X48 (120x50x1200)	
TILT ANGLE	122°	
FRAME LEVELLING (in) (mm)	±0.4 (±10)	
NOISE LEVEL		
NOISE AT DRIWING POSITION	80 db(A)	
NOISE TO ENVIRONMENT	102 db(A)	

COMPONENTS		
PERFORMANCE	**TH-1056**	**TH-1256**
Max. Lifting Capacity (lb) (kg)	10.000 lb (4.536 kg)	12.000 lb (5.443 kg)
Max. Lifting Capacity at Full Height (lb) (kg)	5.000 lb (2.267 kg) (w/ stab)	5.000 lb (2.267 kg) (w/ stab)
Capacity at Max. Reach (lb) (kg)	3.000 lb (1.361 kg) (w/ stab)	3.000 lb (1.361 kg) (w/ stab)
Max. Lifting Height (ft) (mm)	56 ft (17.100mm)	56 ft (17.100mm)
Max. Horizontal Boom Extension (ft) (mm)	42 ft 3 in (12.889mm)	42 ft 3 in (12.889mm)
Boom Lifting Angle (º)	72º (w/ stab)	72º (w/ stab)

Towable Trailer Weight (with / without Brake) (lb/kg)	6600-30000 / (3000-14000)	
Frame Levelling (º)	±10°	
Stabilizer	YES	YES
BOOM CYCLE TIMES		
LIFTING	14,92 s	
LOWERING	15,13 s	
EXTENSION	22,01 s	
RETRACTION	20,14 s	
CROWD	3,72 s	
DUMP	5,16 s	
POWER TRAIN		
ENGINE	DEUTZ	
MODEL	TCD 3.6 L4	
EMISSION LEVEL	TIER 4F w/o DPF	
NUMBER OF CYL-INDERS	4	
ENGINE POWER	100 hp / 74.4kW@2300rpm (STD) 75 hp / 55.4kW@2300rpm (OPT)	
ENGINE TORQUE	302 lb-ft (410Nm) @1600rpm (STD) 288 lb-ft (390Nm) @1300rpm (OPT)	
COMBUSTION SYS-TEM	Commonrail-Direct Injection	
COOLING SYSTEM	Water Cooled	

TRANSMISSION		
HYDRODYNAMIC TRANSMISSION	CARRARO TCH90 PS	
FRONT-REAR AXLE	DANA 223	DANA 213
GEARBOX SPEED	4F / 3R	

COMPONENTS	
MAX TRAVELLING SPEED	20 mph (32 km/h)
STEERING MODES	2WS, 4WS, 4WS-CRAB
PARKING EMERGENCY BRAKE	Negative Parking Brake (SAHR)
BRAKE SYSTEM	FRONT/REAR MULTI DISC w/ OIL BATH
TIRE	17,5-25
HYDRAULIC SYSTEM	
MAIN CONTROL VALVE	“REXROTH SX14 S (ELECTRO-HYDRAULIC CONTROL)”
PUMP	“REXROTH A10VO63LA, VARIABLE DISPLACEMENT (63 ccm)”
SYTEM PRESSURE	3481 psi (240 bar)

MAX FLOW	37 gal (140 l/min)	
JOYSTICK CONTROL	DANFOSS 4 in 1 /w FNR, Up-Down-Shift	
CAPACITIES		
HYDRAULIC TANK	40 gal (150 L)	
FUEL TANK	40 gal (150 L)	
OPERATING WEIGHT (WITHOUT LOAD, WITH FORKS)	33.775 lb (15.320 kg)	34.789 lb (15.780 kg)

DIMENSIONS	
A. WHEELBASE (in) (mm)	138 (3500)
B. OVERALL LENGTH TO FRONT FACE OF TIRE (in) (mm)	201 (5115)
C. OVERALL LENGTH TO CARRIAGE (in) (mm)	252 (6402)
D. GROUND CLEARANCE (in) (mm)	17 (420)
E. INSIDE TIRE WIDTH (in) (mm)	83 (2105)
F. OVERALL WIDTH (in) (mm)	102 (2593)
G. OVERALL CAB WIDTH (in) (mm)	38 (971)
H. OVERALL HEIGHT (in) (mm)	100 (2546)
I. TOW BAR (in) (mm)	3,5 (90)
J. TURNING RADIUS (in) (mm)	57 (1450)
K. TURNING RADIUS (in) (mm)	146 (3697)
STANDARD FORKS (mm)	4”X2”X48 (120x50x1200)
TILT ANGLE	122°
FRAME LEVELLING (in) (mm)	±0.4 (±10)
NOISE LEVEL	
NOISE AT DRIWING POSITION	80 db(A)
NOISE TO ENVIRONMENT	102 db(A)

Dimensions

TH - 842 / TH - 944 / TH - 1044 / TH - 1056 / TH - 1256

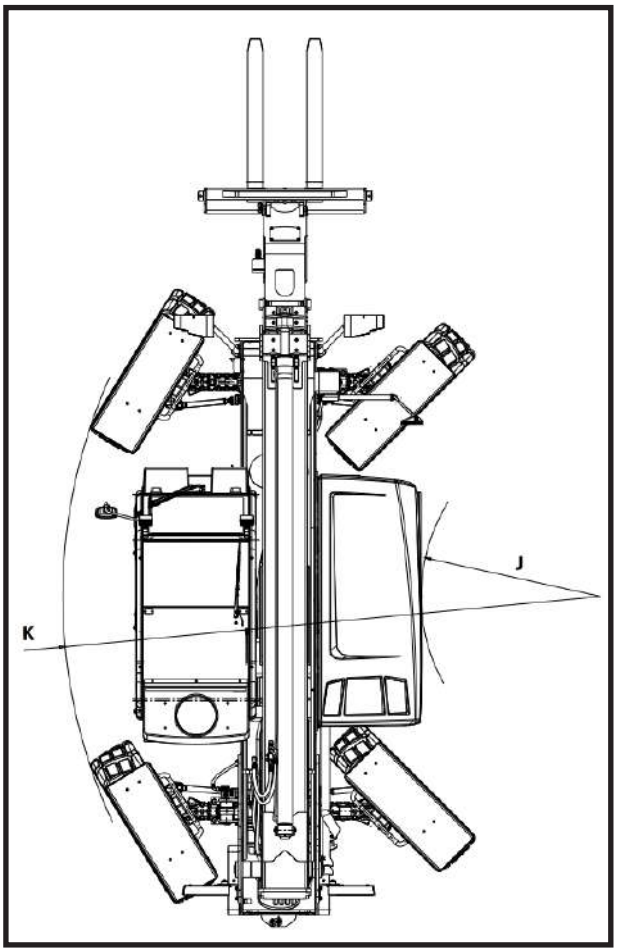

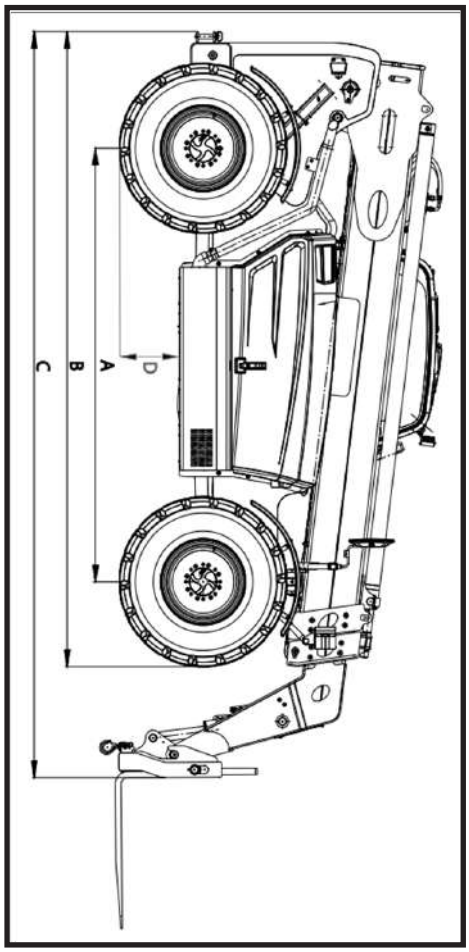

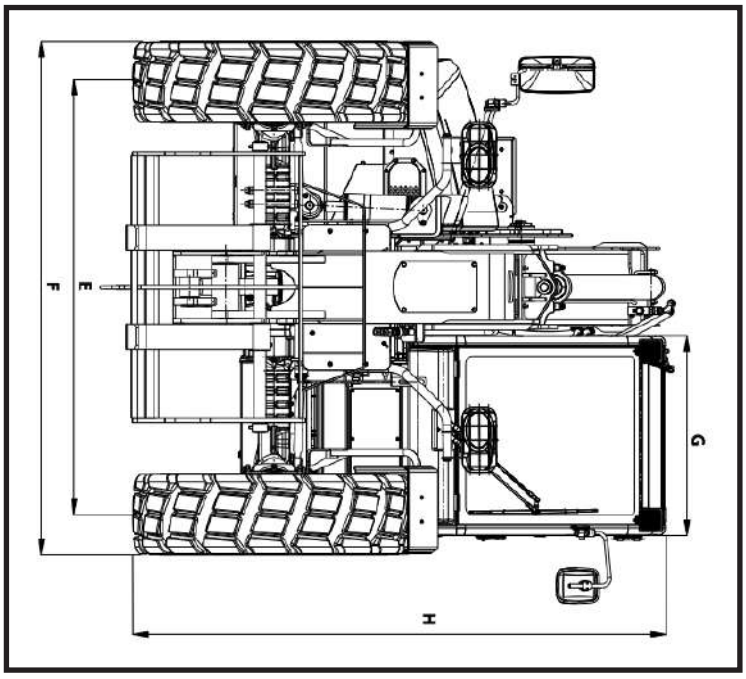

Load Capacity Charts

TH - 842

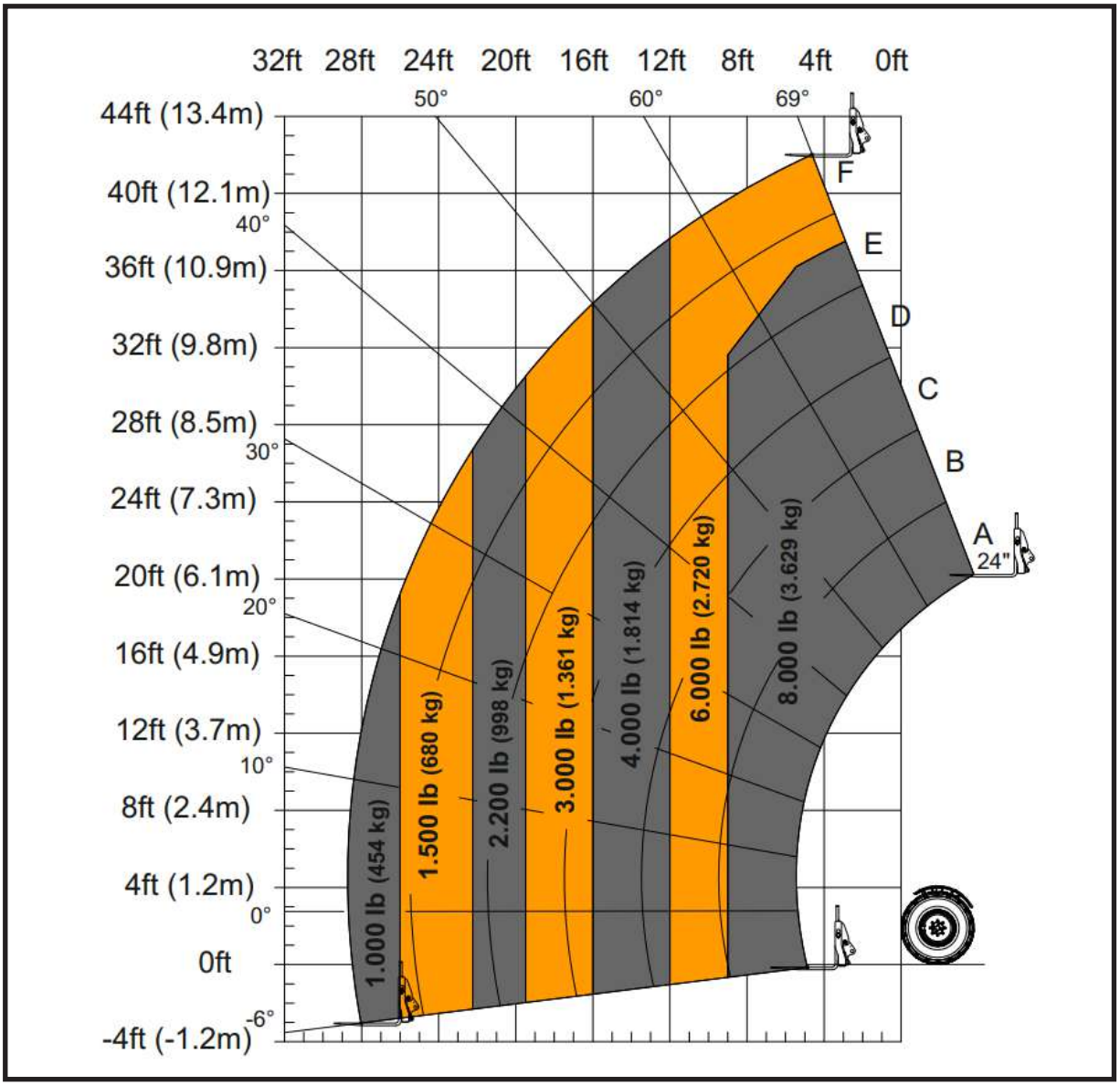

WARNING – Rollover Risk

All loads shown on rated capacity chart are based on vehicle being on firm ground with frame level; the forks being positioned evenly on carriage; the load being centered on forks; proper size tires being properly inflated; and the telehandler being in good operating condition.

TH - 944

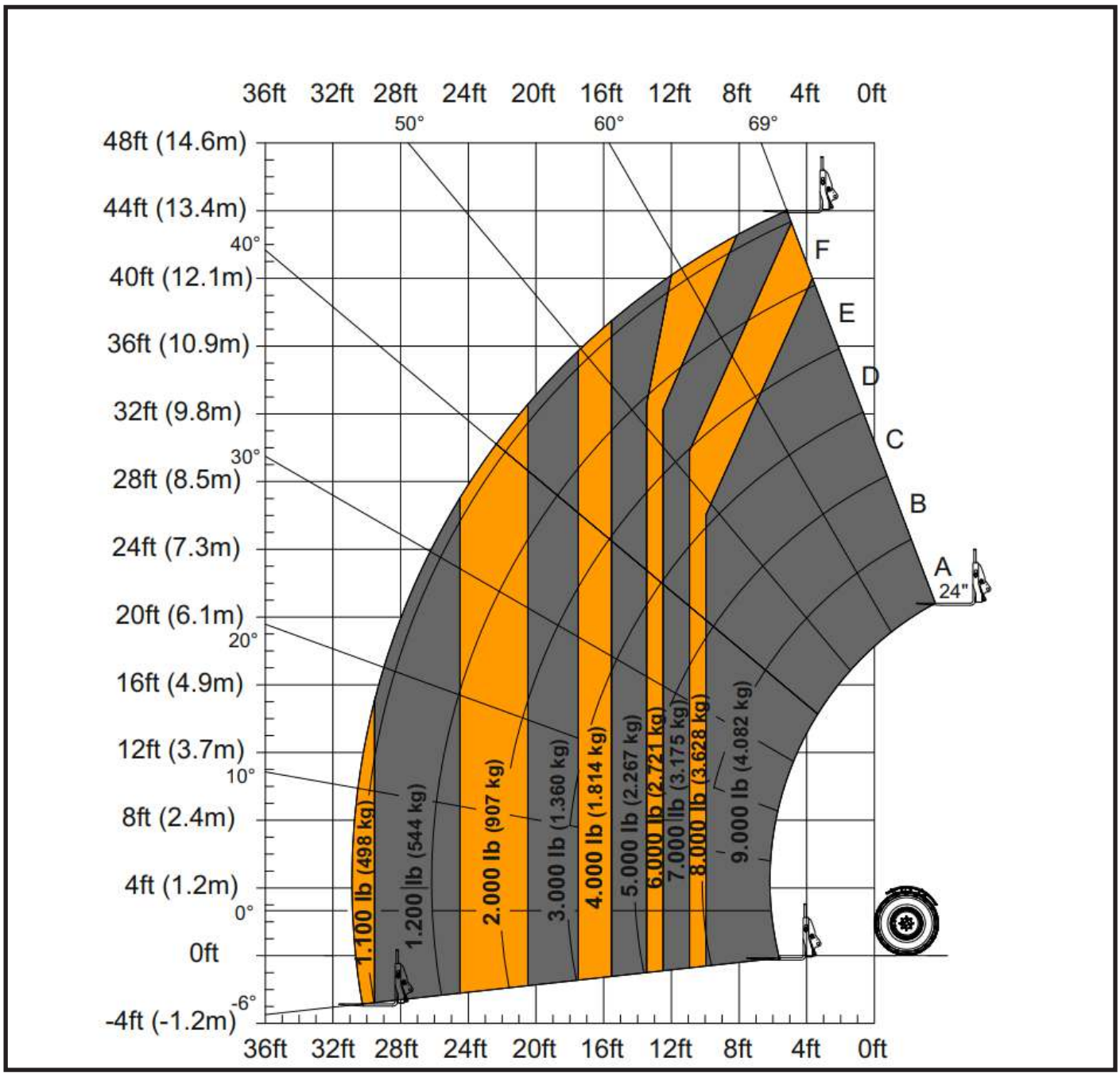
36ft 32ft 28ft 24ft 20ft 16ft 12ft 8ft 4ft 0ft
50°
60°
69°
48ft (14.6m)
44ft (13.4m)
40°
40ft (12.1m)
36ft (10.9m)
32ft (9.8m)
30°
28ft (8.5m)
24ft (7.3m)
20ft (6.1m)
20°
16ft (4.9m)
12ft (3.7m)
10°
8ft (2.4m)
4ft (1.2m)
0°
0ft
-6°
-4ft (-1.2m)
F
E
D
C
B
A
24"
1.100 lb (498 kg)
1.200 lb (544 kg)
2.000 lb (907 kg)
3.000 lb (1.360 kg)
4.000 lb (1.814 kg)
5.000 lb (2.267 kg)
6.000 lb (2.721 kg)
7.000 lb (3.175 kg)
8.000 lb (3.628 kg)
9.000 lb (4.082 kg)

TH - 1044

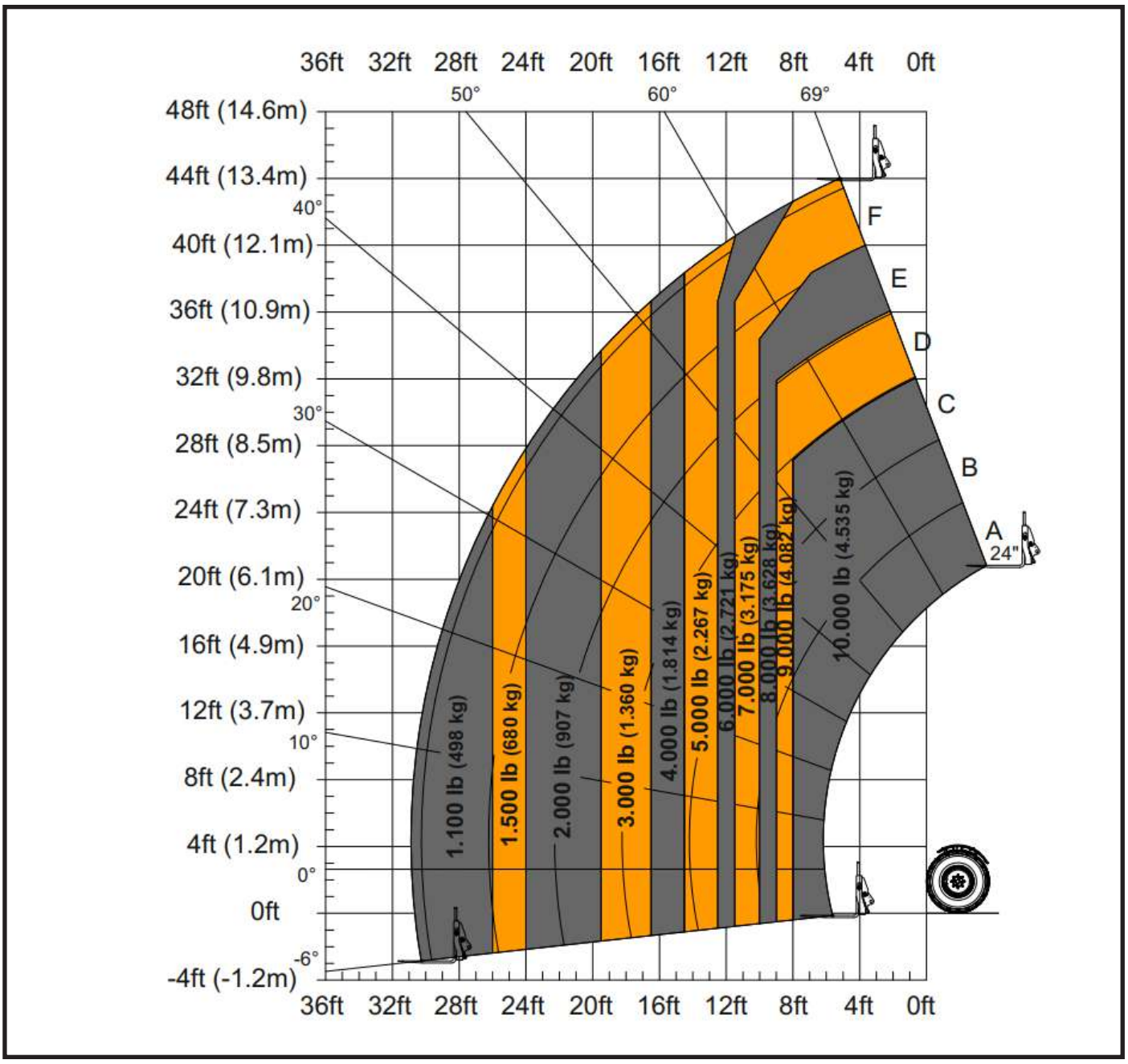
36ft 32ft 28ft 24ft 20ft 16ft 12ft 8ft 4ft 0ft
50° 60° 69°
48ft (14.6m)
44ft (13.4m)
40°
40ft (12.1m)
36ft (10.9m)
32ft (9.8m)
30°
28ft (8.5m)
24ft (7.3m)
20ft (6.1m)
20°
16ft (4.9m)
12ft (3.7m)
10°
8ft (2.4m)
4ft (1.2m)
0°
0ft
-6°
-4ft (-1.2m)
F
E
D
C
B
A
24"
1.100 lb (498 kg)
1.500 lb (680 kg)
2.000 lb (907 kg)
3.000 lb (1.360 kg)
4.000 lb (1.814 kg)
5.000 lb (2.267 kg)
6.000 lb (2.721 kg)
7.000 lb (3.175 kg)
8.000 lb (3.628 kg)
9.000 lb (4.082 kg)
10.000 lb (4.535 kg)
36ft 32ft 28ft 24ft 20ft 16ft 12ft 8ft 4ft 0ft

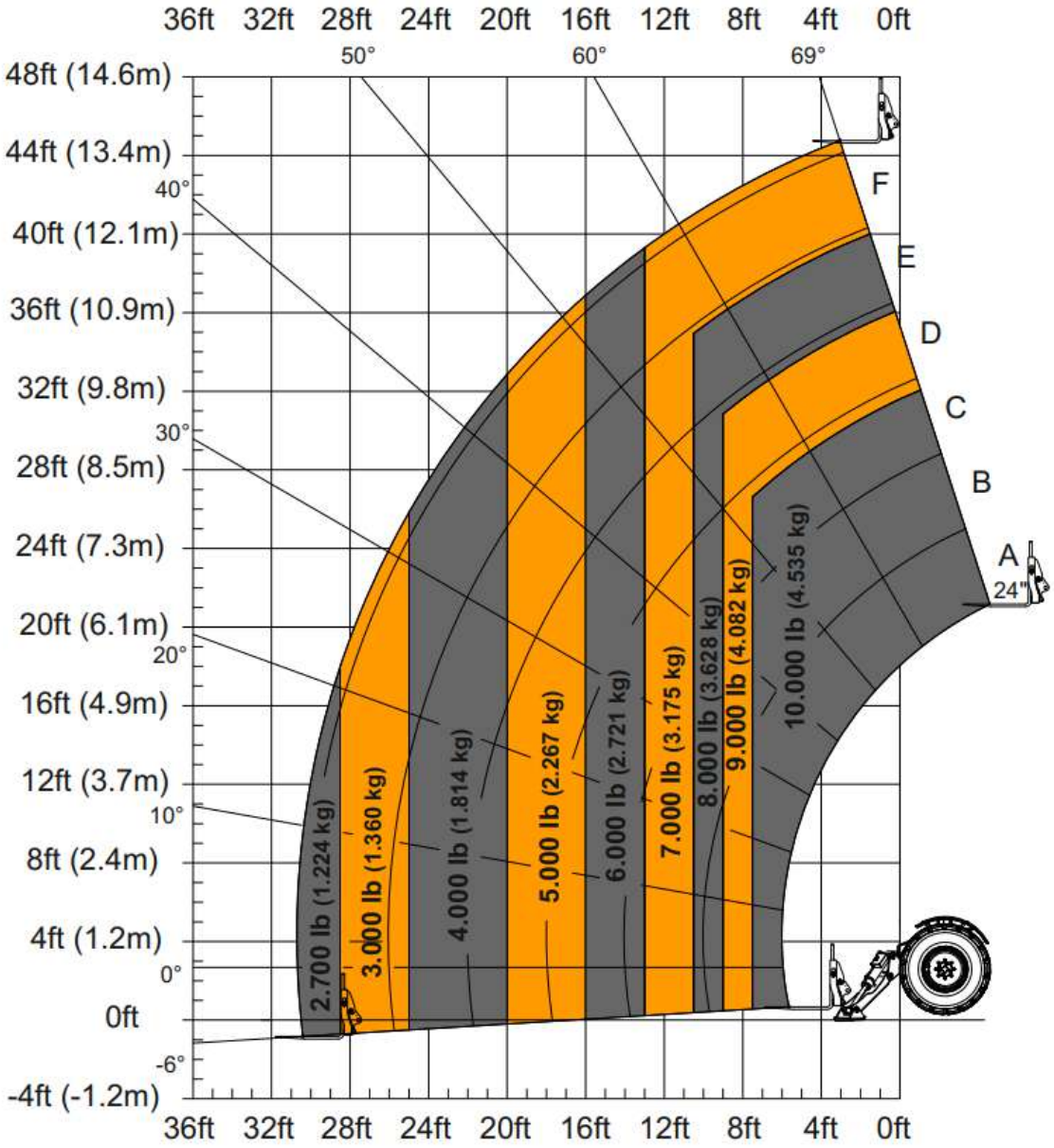
36ft 32ft 28ft 24ft 20ft 16ft 12ft 8ft 4ft 0ft
50°
60°
69°
48ft (14.6m)
44ft (13.4m)
40°
40ft (12.1m)
36ft (10.9m)
32ft (9.8m)
30°
28ft (8.5m)
24ft (7.3m)
20ft (6.1m)
20°
16ft (4.9m)
12ft (3.7m)
10°
8ft (2.4m)
4ft (1.2m)
0°
0ft
-6°
-4ft (-1.2m)
F
E
D
C
B
A
24"
2.700 lb (1.224 kg)
3.000 lb (1.360 kg)
4.000 lb (1.814 kg)
5.000 lb (2.267 kg)
6.000 lb (2.721 kg)
7.000 lb (3.175 kg)
8.000 lb (3.628 kg)
9.000 lb (4.082 kg)
10.000 lb (4.535 kg)

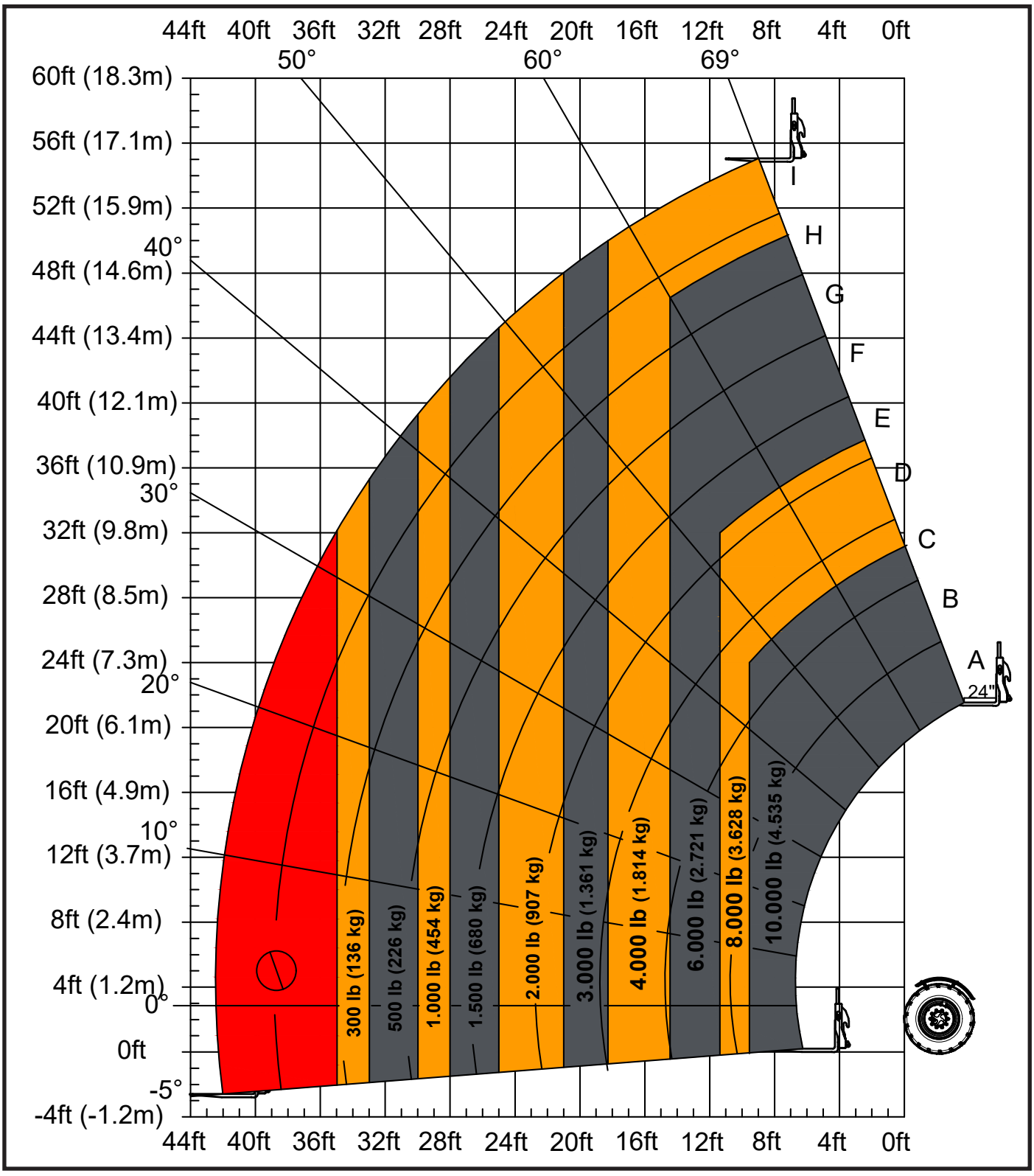
44ft 40ft 36ft 32ft 28ft 24ft 20ft 16ft 12ft 8ft 4ft 0ft
50°
60°
69°
60ft (18.3m)
56ft (17.1m)
52ft (15.9m)
40°
48ft (14.6m)
44ft (13.4m)
40ft (12.1m)
36ft (10.9m)
30°
32ft (9.8m)
28ft (8.5m)
24ft (7.3m)
20°
20ft (6.1m)
16ft (4.9m)
10°
12ft (3.7m)
8ft (2.4m)
4ft (1.2m)
0°
0ft
-5°
-4ft (-1.2m)
I
H
G
F
E
D
C
B
A
24"
300 lb (136 kg)
500 lb (226 kg)
1.000 lb (454 kg)
1.500 lb (680 kg)
2.000 lb (907 kg)
3.000 lb (1.361 kg)
4.000 lb (1.814 kg)
6.000 lb (2.721 kg)
8.000 lb (3.628 kg)
10.000 lb (4.535 kg)

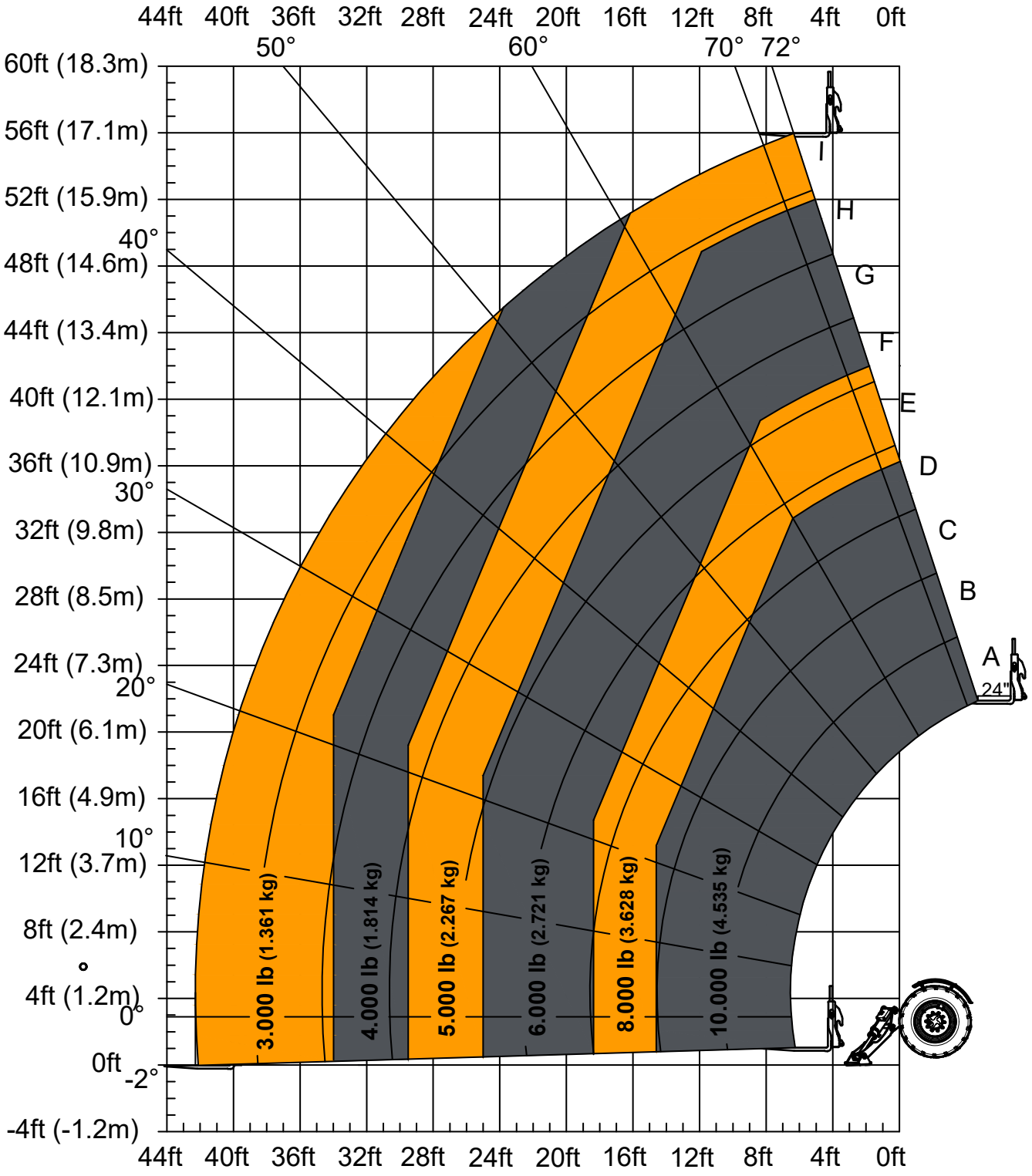
44ft 40ft 36ft 32ft 28ft 24ft 20ft 16ft 12ft 8ft 4ft 0ft
50°
60°
70°
72°
60ft (18.3m)
56ft (17.1m)
52ft (15.9m)
40°
48ft (14.6m)
44ft (13.4m)
40ft (12.1m)
36ft (10.9m)
30°
32ft (9.8m)
28ft (8.5m)
24ft (7.3m)
20°
20ft (6.1m)
16ft (4.9m)
10°
12ft (3.7m)
8ft (2.4m)
4ft (1.2m)
0°
0ft
-2°
-4ft (-1.2m)
I
H
G
F
E
D
C
B
A
24"
3.000 lb (1.361 kg)
4.000 lb (1.814 kg)
5.000 lb (2.267 kg)
6.000 lb (2.721 kg)
8.000 lb (3.628 kg)
10.000 lb (4.535 kg)

TH - 1256

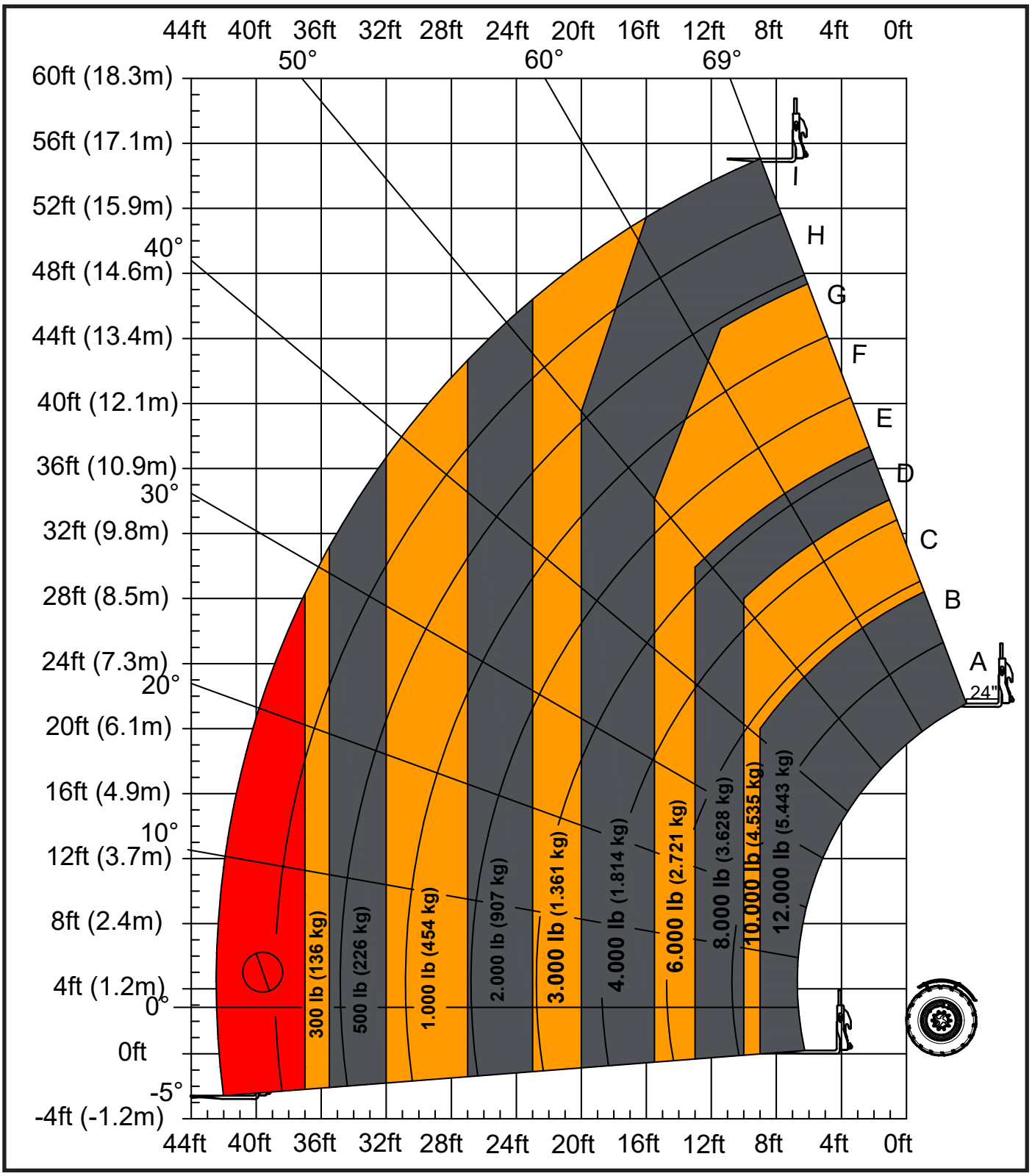
44ft 40ft 36ft 32ft 28ft 24ft 20ft 16ft 12ft 8ft 4ft 0ft
50°
60°
69°
60ft (18.3m)
56ft (17.1m)
52ft (15.9m)
40°
48ft (14.6m)
44ft (13.4m)
40ft (12.1m)
36ft (10.9m)
30°
32ft (9.8m)
28ft (8.5m)
24ft (7.3m)
20°
20ft (6.1m)
16ft (4.9m)
10°
12ft (3.7m)
8ft (2.4m)
4ft (1.2m)
0°
0ft
-5°
-4ft (-1.2m)
I
H
G
F
E
D
C
B
A
24"
300 lb (136 kg)
500 lb (226 kg)
1.000 lb (454 kg)
2.000 lb (907 kg)
3.000 lb (1.361 kg)
4.000 lb (1.814 kg)
6.000 lb (2.721 kg)
8.000 lb (3.628 kg)
10.000 lb (4.535 kg)
12.000 lb (5.443 kg)

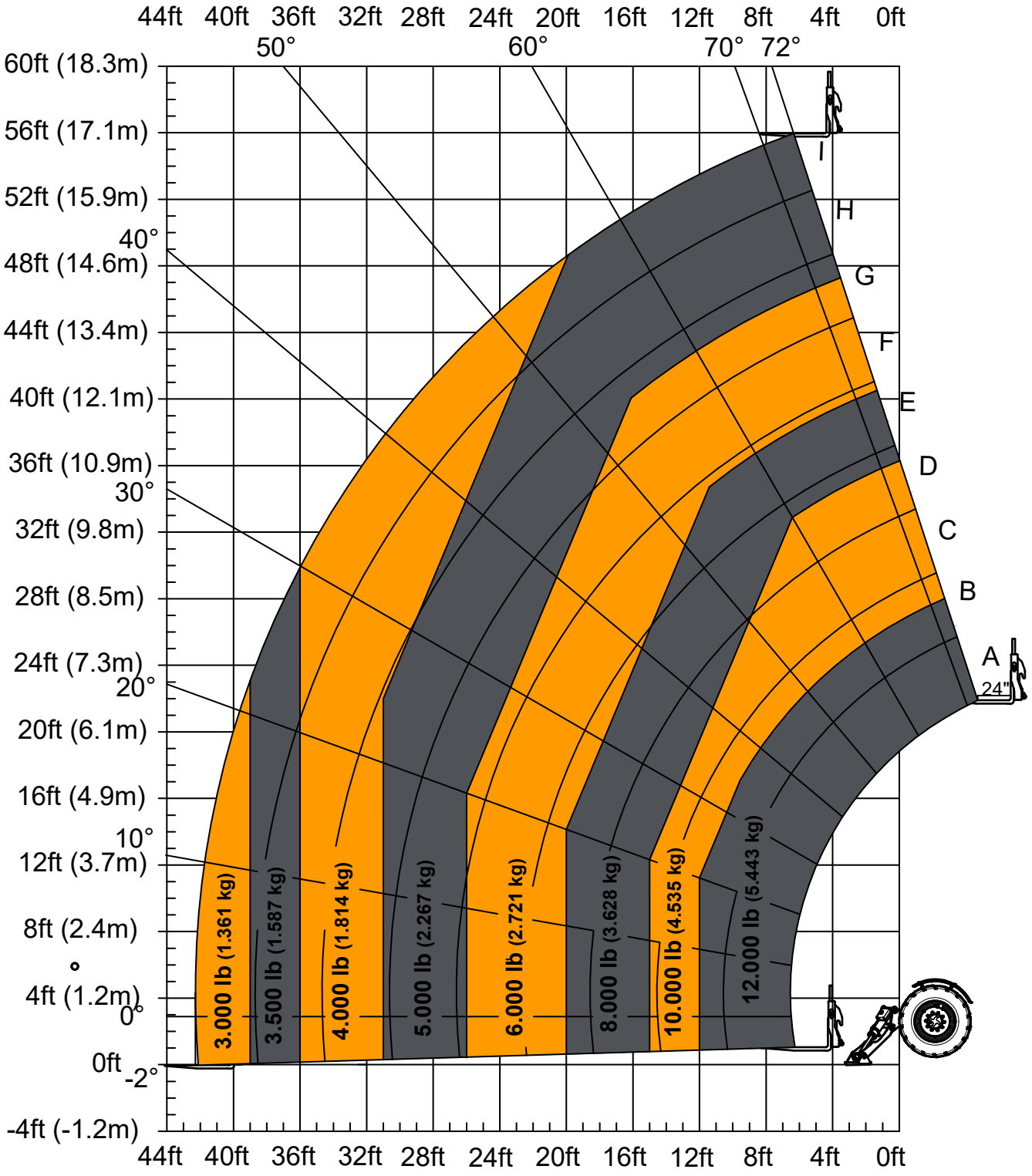
44ft 40ft 36ft 32ft 28ft 24ft 20ft 16ft 12ft 8ft 4ft 0ft
50° 60° 70° 72°
60ft (18.3m)
56ft (17.1m)
52ft (15.9m)
40°
48ft (14.6m)
44ft (13.4m)
40ft (12.1m)
36ft (10.9m)
30°
32ft (9.8m)
28ft (8.5m)
24ft (7.3m)
20°
20ft (6.1m)
16ft (4.9m)
10°
12ft (3.7m)
8ft (2.4m)
4ft (1.2m)
0°
0ft
-2°
-4ft (-1.2m)
I
H
G
F
E
D
C
B
A
24"
3.000 lb (1.361 kg)
3.500 lb (1.587 kg)
4.000 lb (1.814 kg)
5.000 lb (2.267 kg)
6.000 lb (2.721 kg)
8.000 lb (3.628 kg)
10.000 lb (4.535 kg)
12.000 lb (5.443 kg)

Component Weights

All weights are in lb (kg). Weights are approximate and are given for the selection of lifting equipment.

Component / Assembly	TH-842	TH-944	TH-1044	TH-1056	TH-1256
MACHINE					
Operating weight, closed cab, unladen with standard forks	23,920 (10,850)	25,243 (11,450)	27,117 (12,300)	33,775 (15,320)	34,789 (15,780)
CHASSIS AND CAB					
Bare chassis / frame	5,071 (2,300)	5,071 (2,300)	5,842 (2,650)	6,504 (2,950)	6,504 (2,950)
Counterweight	2,116 (960)	2,116 (960)	2,976 (1,350)	2,425 (1,100)	3,417 (1,550)
Cab assembly, closed (ROPS/FOPS)	1,543 (700)	1,543 (700)	1,543 (700)	1,543 (700)	1,543 (700)
Cab assembly, open (ROPS/FOPS)	1,323 (600)	1,323 (600)	1,323 (600)	1,323 (600)	1,323 (600)
Engine hood	154 (70)	154 (70)	154 (70)	154 (70)	154 (70)
BOOM					
Boom assembly, complete with cylinders and carriage	6,834 (3,100)	8,818 (4,000)	8,818 (4,000)	11,464 (5,200)	11,464 (5,200)
Outer boom section	1,653 (750)	1,852 (840)	1,852 (840)	2,579 (1,170)	2,579 (1,170)
Intermediate boom section(s)	1,146 (520)	1,213 (550)	1,213 (550)	1,653 (750) / 1,389 (630)	1,653 (750) / 1,389 (630)
Inner boom section	1,433 (650)	1,543 (700)	1,543 (700)	1,609 (730)	1,609 (730)
Standard fork, each	176 (80)	176 (80)	176 (80)	198 (90)	198 (90)
HYDRAULIC CYLINDERS					
Lift cylinder	353 (160)	375 (170)	375 (170)	397 (180)	397 (180)
Extension cylinder	595 (270)	772 (350)	772 (350)	794 (360)	794 (360)
Tilt cylinder	154 (70)	176 (80)	176 (80)	187 (85)	187 (85)
Compensation cylinder	154 (70)	176 (80)	176 (80)	198 (90)	198 (90)
Frame leveling (sway) cylinder	88 (40)	88 (40)	88 (40)	99 (45)	99 (45)
Stabilizer cylinder	n/a	n/a	154 (70)	176 (80)	176 (80)
STABILIZERS					
Stabilizer assembly, each side, with cylinder	n/a	n/a	364 (165)	441 (200)	441 (200)
POWERTRAIN					
Engine, complete	772 (350)	772 (350)	772 (350)	772 (350)	772 (350)
Transmission with torque converter	882 (400)	882 (400)	882 (400)	882 (400)	882 (400)
Engine and transmission unit, removed together	1,653 (750)	1,653 (750)	1,653 (750)	1,653 (750)	1,653 (750)
Front driveshaft	29 (13)	29 (13)	29 (13)	26 (12)	26 (12)
Rear driveshaft	40 (18)	40 (18)	40 (18)	37 (17)	37 (17)
Cooling package, complete	165 (75)	165 (75)	165 (75)	165 (75)	165 (75)
TANKS AND OTHER COMPONENTS					
Hydraulic tank, empty	231 (105)	231 (105)	231 (105)	243 (110)	243 (110)
Fuel tank, empty	165 (75)	165 (75)	165 (75)	187 (85)	187 (85)
Wheel and rim assembly, each	386 (175)	386 (175)	386 (175)	419 (190)	419 (190)
Battery	95 (43)	95 (43)	95 (43)	95 (43)	95 (43)

WARNING — Use lifting equipment with a rated capacity of at least 1.5 times (150%) the weight of the component being lifted.

Transporting the Vehicle

The weight of the vehicle is listed on the serial number plate located at the front of the frame. Actual vehicle weight and center of gravity will vary depending on attachment, fluid levels and vehicle options. Actual weight and center of gravity should be verified prior to lifting.

TH - 842

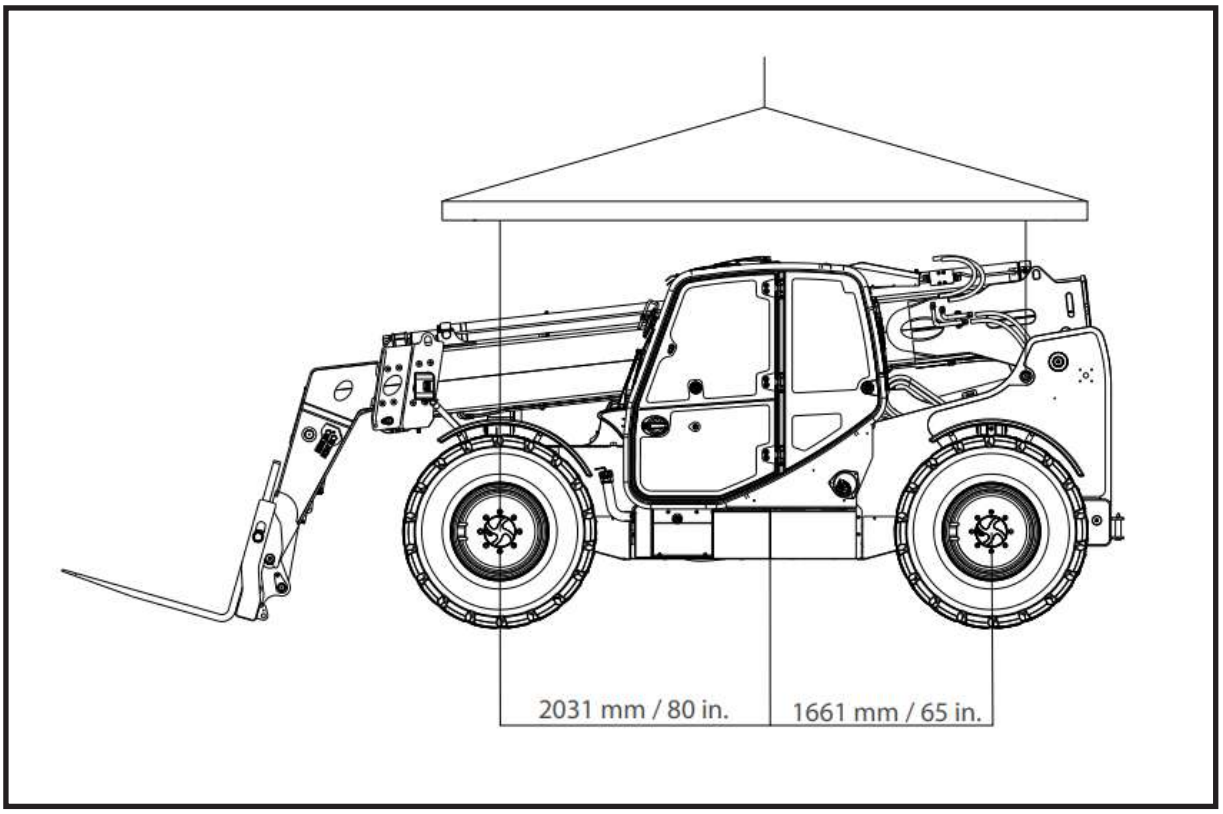

TH - 944

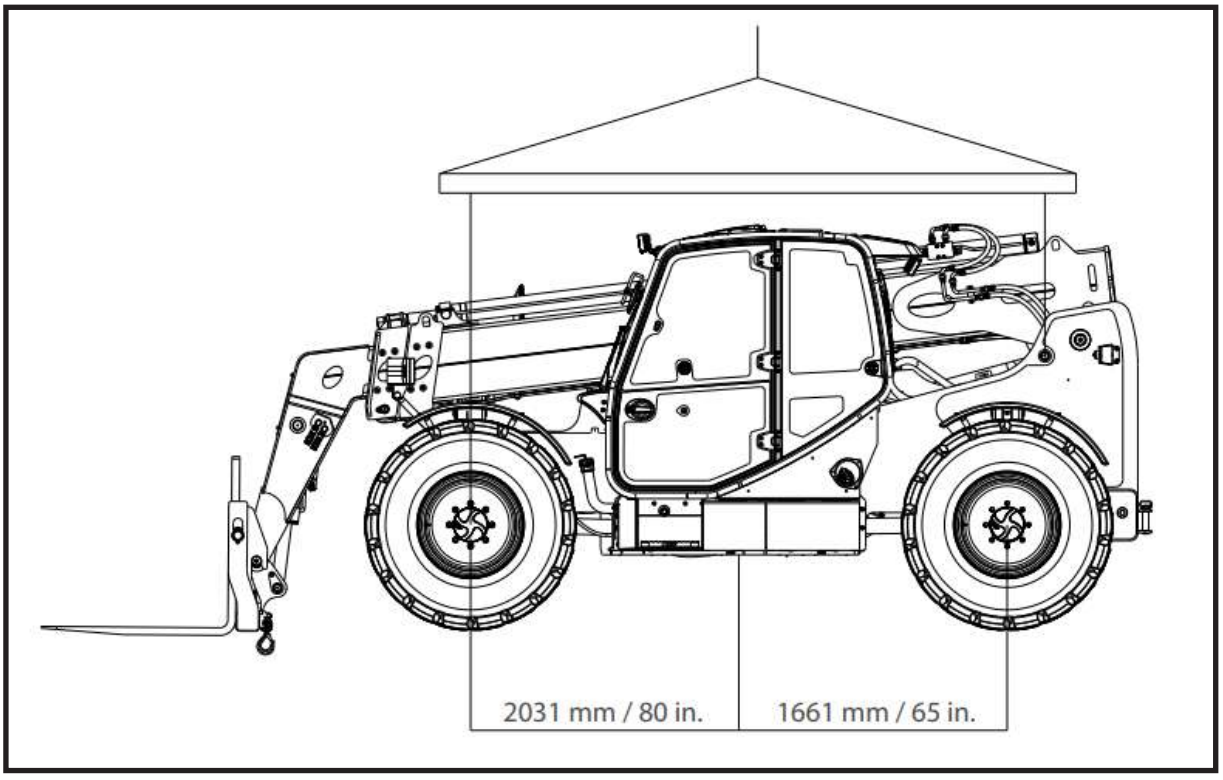

TH - 1044

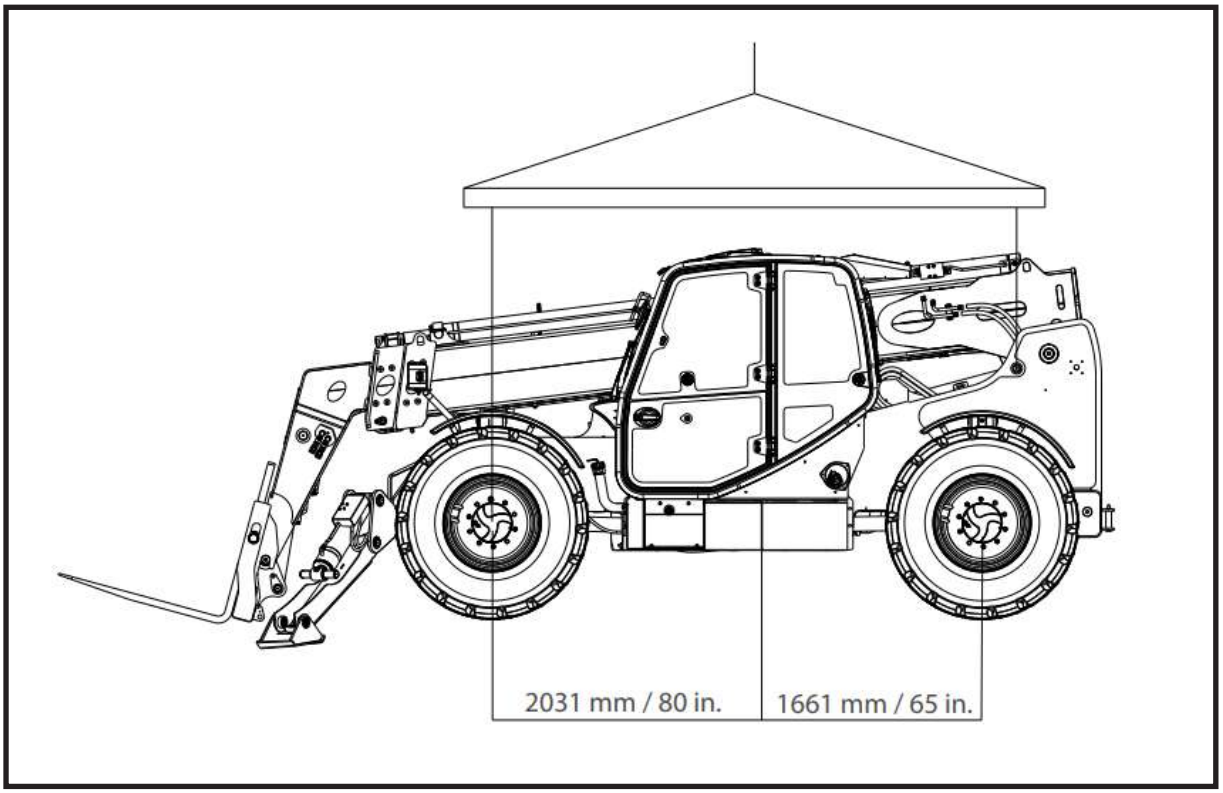

TH - 1056

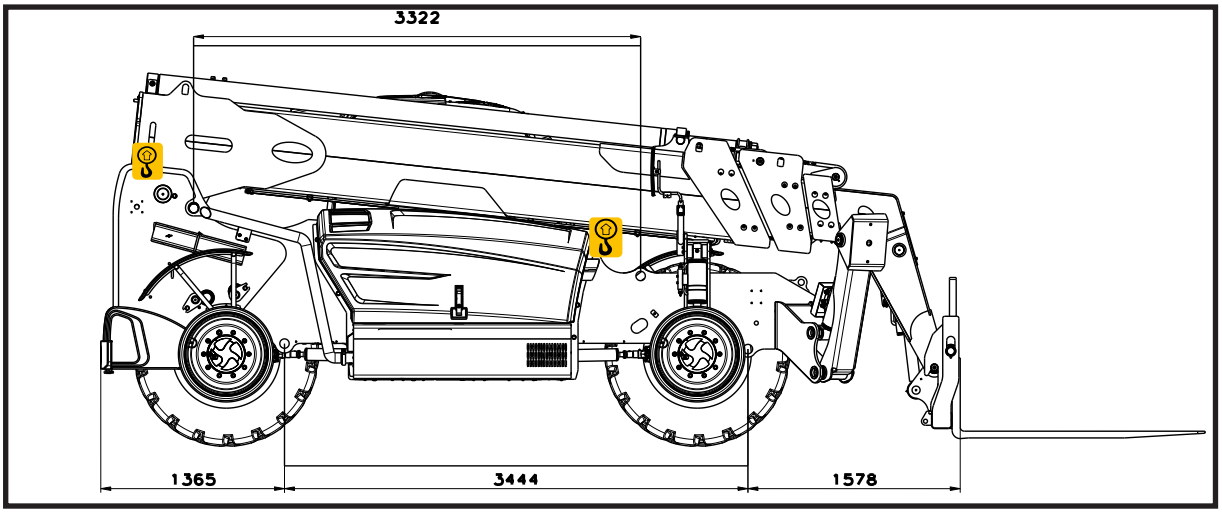

TH - 1256

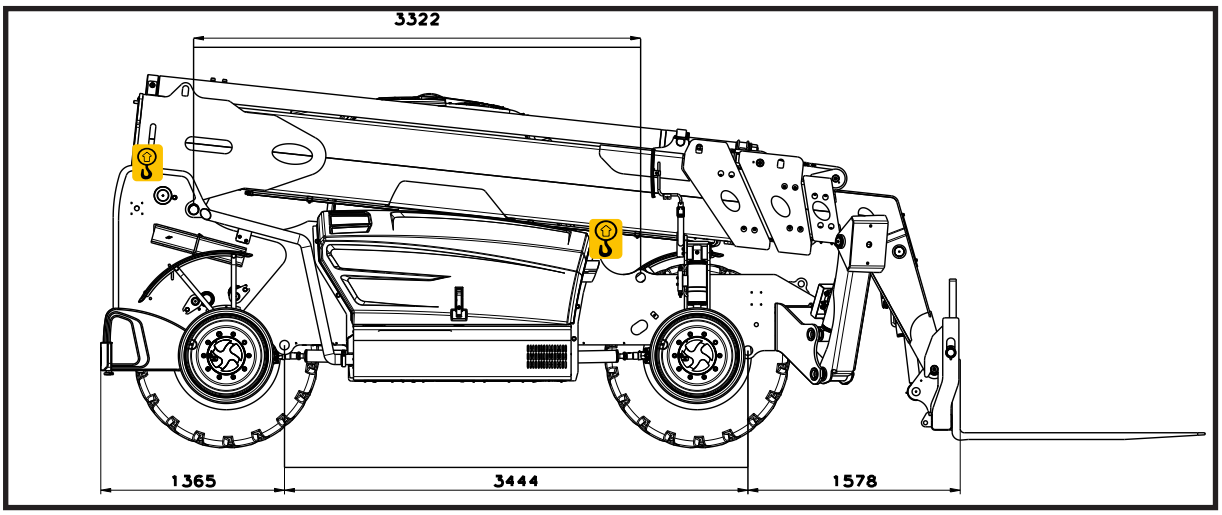

The following precautions must be taken when transporting the vehicle with a mobile crane:

- Make adjustments to the lifting device and equipment to ensure that the vehicle will be level when elevated. The vehicle must remain level at all times while being lifted.
- Vehicle must never be lifted by any point on the boom.
- Take care not to let cables, chains, slings, etc. contact any part of the vehicle during lift.
- All lifting points are designated with a safety label. The appropriate lifting locations are the axle beams, inboard of the kingpins. Take care as not to damage the tie-rod assemblies.
- Ensure that the boom is retracted and lowered.
- Ensure that the lifting device and equipment is adequately rated and suitable for the intended purpose.
- Remove all loose items from vehicle prior to lifting of the vehicle.

Lifting the Vehicle

Securing the Vehicle to Truck / Trailer

1. Turn the key switch to the off position and remove the key before transporting.
2. Inspect the entire vehicle for loose or unsecured items.
3. Ensure that doors and windows are latched and secured.
4. Level the telehandler and retract the boom before start to lifting procedure.
5. Always use a spotter for loading, unloading and towing procedures.
6. Keep the boom as low as possible when loading and unloading.
7. Apply the parking brake.
8. Use lifting chains that meets the load capacity.
9. There are 4 tie down points on the chassis, two in the front and one in the rear of the vehicle.
10. Fully lower the forks or attachment onto the truck bed.
11. Secure the forks or attachment with a suitable strap or chain to prevent movement.
12. Adjust the rigging to prevent damage to the chains.
13. Block the wheels of the platform.

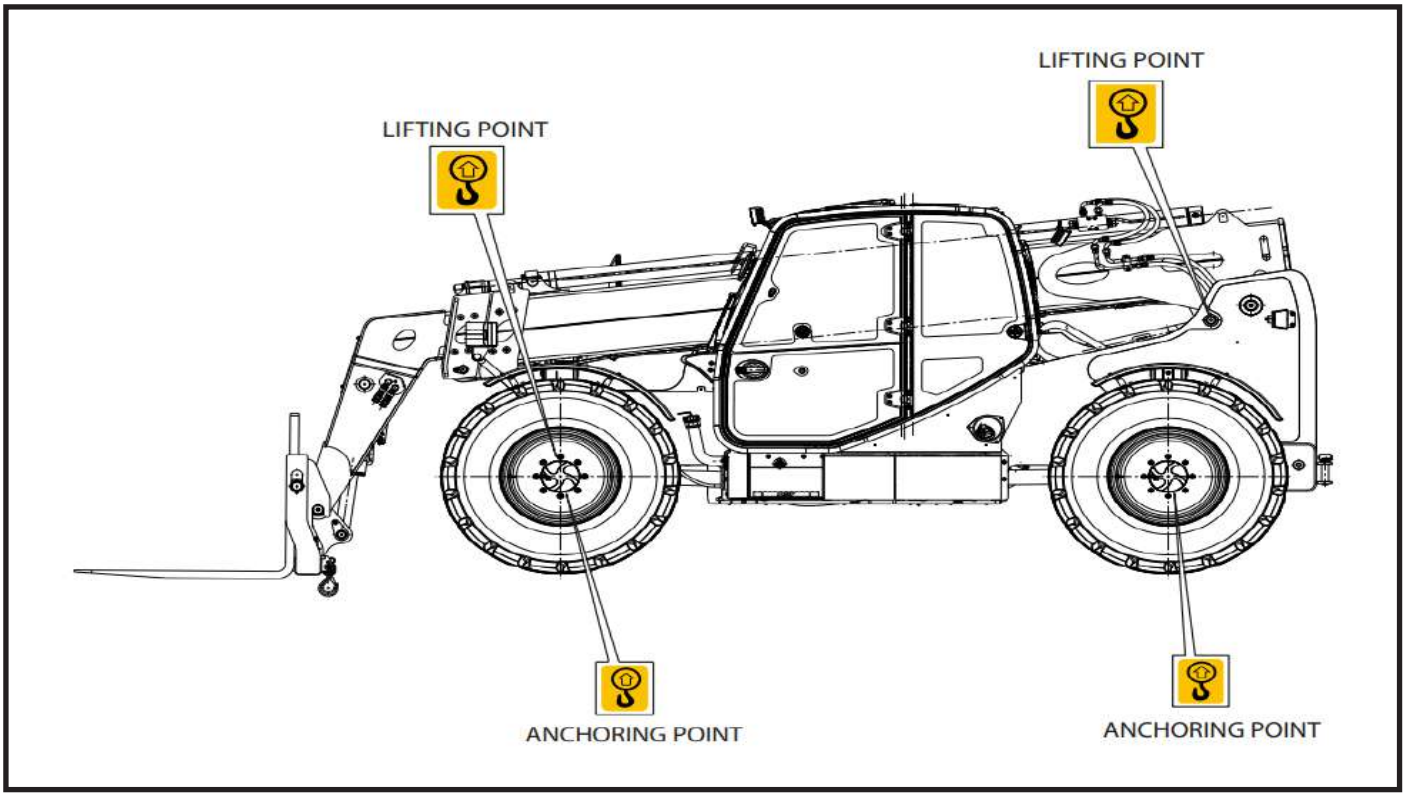

14. Attach the loading ramps to the platform in such a way as to give the shallowest possible ramp angle for the vehicle.
15. Load the vehicle parallel to the platform.
16. Fix the chocks to the platform at the front and at the rear of each tire.
17. Also fix the chocks to the platform on the inside of each tire.
18. Secure the vehicle to the platform at the anchoring points provided with sufficiently strong ropes.
19. Tighten the ropes.

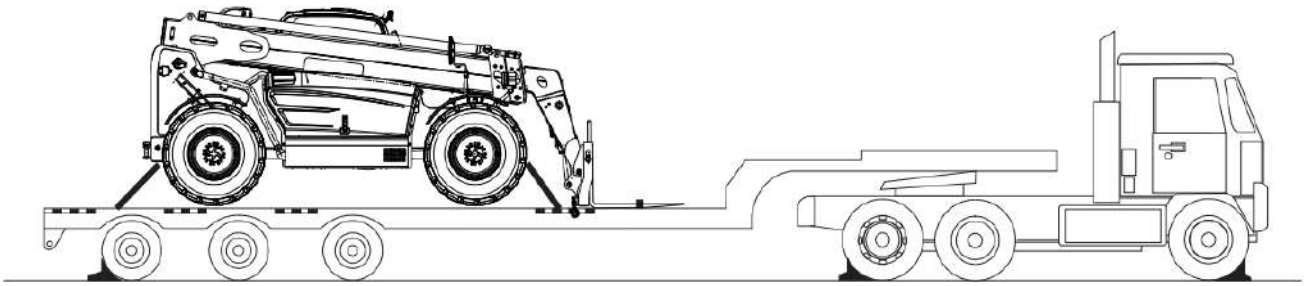

WARNING – Risk of Accident

Before lifting, check the lifting equipment for proper installation.

- Never allow riders in the operator's station while the telehandler is lifted.
- Keep everyone a safe distance away from the telehandler while it is lifted.
- The telehandler may only be lifted without a load on the forks, or without an attachment. Never lift the telehandler with attachment other than those stated.

2.4.Hydraulic Circuit

This chapter covers hydraulic circuits and includes lists of all hydraulic function pressures, where and how to control these pressures, and a hydraulic diagram.

Electrical and hydraulic functions are often related. Verify that the electrical components of the circuit are functioning properly whenever troubleshooting the hydraulic circuit.

Always check the following before beginning to troubleshoot a circuit that is not functioning correctly.

1. Check the hydraulic oil level in the reservoir.
2. Check hoses, tubes, fittings and other hydraulic components for leaks, bends, kinks, interference, etc.
3. Check for air in the hydraulic system.

If air in the hydraulic system is suspected, you will hear air leakage when hydraulic fittings are loosened and see air bubbles in the hydraulic fluid.

Loose fittings, faulty O-rings or seals, trapped oil, leaks, system opened for service, etc. can cause air in the system. Determine what is causing air to enter the system and correct it. Bleed air from the system.

2.5.Fluid and Lubricant Capacities

NOTICE

Fuel costs represent a major portion of machine operating costs and therefore must be used efficiently. ALWAYS use e Premium brand of high quality, clean diesel fuel. Low cost, inferior fuel can lead to poor performance and expensive engine repair.

2.5.1. Introduction

Pollution is the most dangerous factor for hydraulic systems. Contaminants can enter the system in various ways. The main ones of these ways are; Use of insufficient hydraulic oil, grease, sawdust, moisture, sealing components, sand, etc. entering the system during maintenance. System overheating or leaks in the pump feed. Even the smallest amount of foreign matter or dirt entering the system can cause wear or damage to components. Such cases usually result in malfunction. Every precaution must be taken to keep hydraulic oils clean. Never mix different brands or types of oils. Because these oils may not contain the same additives and may not have similar viscosities. The oils recommended for use are good quality mineral oils with a viscosity suitable for the ambient temperature where the machine operates. Note: Metal particles may appear in the filters or oil of new machines. The reason for this is the wear of the interlocking parts.

2.5.2. Fuel, Oil and Other Fluids Capacities

Fluid	Quantity		Specification	Fluid Standart
Diesel Engine Oil 10.6L		11.2 quarts	CASTROL VECTON 15W-40 CK-4/E9, 208L TU, 15C243	API CJ-4/API CK-4
Engine Coolant	25L	17.96 quarts	Antifreeze Mixture (50% Glycol)	ASTM D6210/ASTM D4985
Fuel Tank	150L	39.6 quarts	Ultra Low Sulfur (S ≤ 15 mg/kg)	EN590ASTM D 975 Grade 1-D ASTM D 975 Grade 2-D
Hydraulic Oil Tank	150L	39.6 quarts	CASTROL HYSPIN AWH-M 46, 208L TU, 1501FD	-
Windshield Wiper Fluid	1.5L	1.58 quarts	Distilled Water	-
Front Differential (212-212HY) Model: TH-842-TH-944-TH-1044	7.5L	7.92 quarts	CASTROL TRANSMAX Limited Slip Z 85W-90	API GL-4
Front Final Drive (212) Model: TH-842-TH-944	0.8L	0.84 quarts	CASTROL Axle EPX 80W-90	API GL-4
Rear Differential (212-212HY) Model: TH-842-TH-944	7.5L	7.92 quarts	CASTROL TRANSMAX Limited Slip Z 85W-90	API GL-4
Rear Final Drive (212) Model: TH-842- TH-944	0.8L	0.84 quarts	CASTROL Axle EPX 80W-90	API GL-4
Front Final Drive (212HY) Model: TH-1044	1.4L	1.48 quarts	CASTROL Axle EPX 80W-90	API GL-4
Rear Final Drive (212HY) Model: TH-1044	1.4L	1.48 quarts	CASTROL Axle EPX 80W-90	API GL-4
Transmission Oil	21L	5.55 quarts	CASTROL TRANSMAX AGRI TRANS PLUS 80W, 17L TU, 15E740	API GL-4
Transmission Tranfer Box	1.75L	1.85 quarts		API GL-4
DEF Tank	20L	5.28 quarts	DEF Fluid 32.5% Urea	ISO 22241-1

2.6.Torque Charts and Specifications

SAE

Size	TPI	Bolt Dia	Tensile Stress Area	Clamp Load	Torque (Dry)		Torque Lubricated		Torque (Loctite® 242™ or 271™ or Vibra-TITE™ 111 or 140)		Torque (Loctite® 262™ or Vibra-TITE™131	
		In	**Sq In**	**LB**	**IN-LB**	**[N.m]**	**IN-LB**	**[N.m]**	**IN-LB**	**[N.m]**	**IN-LB**	**[N.m]**
4	40	0.1120	0.00604	380	8	0.9	6	0.7				
	48	0.1120	0.00661	420	9	1.0	7	0.8				
6	32	0.1380	0.00909	580	16	1.8	12	1.4				
	40	0.1380	0.01015	610	18	2.0	13	4.5				
8	32	0.1640	0.01400	900	30	3.4	22	2.5				
	36	0.1640	0.01474	940	31	3.5	23	2.6				
10	24	0.1900	0.01750	1120	43	4.8	32	3.5				
	32	0.1900	0.02000	1285	49	5.5	36	4				
1/4	20	0.2500	0.0318	2020	96	10.8	75	9	105	12		
	28	0.2500	0.0364	2320	120	13.5	86	10	135	15		

Size	TPI	Bolt Dia	Tensile Stress Area	Clamp Load	Torque (Dry)		Torque Lubricated		Torque (Loctite® 242™ or 271™ or Vibra-TITE™ 111 or 140)		Torque (Loctite® 262™ or Vibra-TITE™131	
		In	**Sq In**	**LB**	**FT-LB**	**[N.m]**	**FT-LB**	**[N.m]**	**FT-LB**	**[N.m]**	**FT-LB**	**[N.m]**
5/16	18	0.3125	0.0524	17	23	23	13	18	19	26	16	22
	24	0.3125	0.0580	19	26	26	14	19	21	29	17	23
3/8	16	0.3750	0.0775	30	41	41	23	31	35	48	28	38
	24	0.3750	0.0878	35	47	47	25	34	40	54	32	43
7/16	14	0.4375	0.1063	50	68	68	35	47	55	75	45	61
	20	0.4375	0.1187	55	75	75	40	54	60	82	50	68
1/2	13	0.5000	0.1419	75	102	102	55	75	85	116	68	92
	20	0.5000	0.1599	90	122	122	65	88	100	136	80	108
9/16	12	0.5625	0.1820	110	149	149	80	108	120	163	98	133
	18	0.5625	0.2030	120	163	163	90	122	135	184	109	148
5/8	11	0.6250	0.2260	150	203	203	110	149	165	224	135	183
	18	0.6250	0.2560	170	230	230	130	176	190	258	153	207

Size	TPI	Bolt Dia	Tensile Stress Area	Clamp Load	Torque (Dry)		Torque Lubri-cated		Torque (Loctite® 242™ or 271™ or Vibra-TITE™ 111 or 140)		Torque (Loctite® 262™ or Vibra-TITE™ 131)	
		In	**Sq In**	**LB**	**FT-LB**	**[N.m]**	**FT-LB**	**[N.m]**	**FT-LB**	**[N.m]**	**FT-LB**	**[N.m]**
3/4	10	0.7500	0.3340	21300	260	353	200	271	285	388	240	325
	16	0.7500	0.3730	23800	300	407	220	298	330	449	268	363
7/8	9	0.8750	0.4620	29400	430	583	320	434	475	646	386	523
	14	0.8750	0.5090	32400	470	637	350	475	520	707	425	576
1	8	1.0000	0.6060	38600	640	868	480	651	675	918	579	785
	12	1.0000	0.6630	42200	700	949	530	719	735	1000	633	858
1 1/8	7	1.1250	0.7630	42300	800	1085	600	813	840	1142	714	968
	12	1.1250	0.8560	47500	880	1193	660	895	925	1258	802	1087
1 1/4	7	1.2500	0.9690	53800	1120	1518	840	1139	1175	1598	1009	1368
	12	1.2500	1.0730	59600	1240	1681	920	1247	1300	1768	1118	1516
1 3/8	6	1.3750	1.1550	64100	1460	1979	1100	1491	1525	2074	1322	1792
	12	1.3750	1.3150	73000	1680	2278	1260	1708	1750	2380	1506	2041
1 1/2	6	1.5000	1.4050	78000	1940	2630	1460	1979	2025	2754	1755	2379
	12	1.5000	1.5800	87700	2200	2983	1640	2224	2300	3128	1974	2676

Size	TPI	Bolt Dia	Tensile Stress Area	Clamp Load	Torque (Dry or Loctite® 263) K=0.20		Torque (Loctite® 242™ or 271™ or Vi-bra-TITE™ 111 or 140) K= 0.18		Torque (Loctite® 262™ or Vibra TITE™ 131) K=0.15	
		In	**Sq In**	**LB**	**IN-LB**	**[N.m]**	**IN-LB**	**[N.m]**	**IN-LB**	**[N.m]**
4	40	0.1120	0.00604							
	48	0.1120	0.00661							
6	32	0.1380	0.00909							
	40	0.1380	0.01015							
8	32	0.1640	0.01400							
	36	0.1640	0.01474	1320	43	5				
10	24	0.1900	0.01750	1580	60	7				
	32	0.1900	0.02000	1800	68	8				
1/4	20	0.2500	0.0318	2860	143	16	129	15		
	28	0.2500	0.0364	3280	164	19	148	17		

Size	TPI	Bolt Dia	Tensile Stress Area	Clamp Load	Torque (Dry)		Torque Lubri-cated		Torque (Loctite® 242™ or 271™ or Vi-bra-TITE™ 111 or 140)		Torque (Loctite® 262™ or Vibra-TITE™ 131)	
		In	**Sq In**	**LB**	**FT-LB**	**[N.m]**	**FT-LB**	**[N.m]**	**FT-LB**	**[N.m]**	**FT-LB**	**[N.m]**
5/16	18	0,3125	0,0524	4720	25	35	20	25	20	25		
	24	0,3125	0,0580	5220	25	35	25	35	20	25		
3/8	16	0,3750	0,0775	7000	45	60	40	55	35	50		
	24	0,3750	0,0878	7900	50	70	45	60	35	50		
7/16	14	0,4375	0,1063	9550	70	95	65	90	50	70		
	20	0,4375	0,1187	10700	80	110	70	95	60	80		
1/2	13	0,5000	0,1419	12750	105	145	95	130	80	110		
	20	0,5000	0,1599	14400	120	165	110	150	90	120		
9/16	12	0,5625	0,1820	16400	155	210	140	190	115	155		
	18	0,5625	0,2030	18250	170	230	155	210	130	175		
5/8	11	0,6250	0,2260	20350	210	285	190	260	160	220		
	18	0,6250	0,2560	23000	240	325	215	290	180	245		
3/4	10	0,7500	0,3340	30100	375	510	340	460	280	380		
	16	0,7500	0,3730	33600	420	570	380	515	315	430		

Size	TPI	Bolt Dia	Tensile Stress Area	Clamp Load	Torque (Dry)		Torque Lubri-cated		Torque (Loctite® 242™ or 271™ or Vi-bra-TITE™ 111 or 140)		Torque (Loctite® 262™ or Vibra-TITE™ 131)	
		In	**Sq In**	**LB**	**FT-LB**	**[N.m]**	**FT-LB**	**[N.m]**	**FT-LB**	**[N.m]**	**FT-LB**	**[N.m]**
7/8	9	0.8750	0.4620	41600	605	825	545	740	455	620		
	14	0.8750	0.5090	45800	670	910	600	815	500	680		
1	8	1.0000	0.6060	51500	860	1170	770	1045	645	875		
	12	1.0000	0.6630	59700	995	1355	895	1215	745	1015		
1 1/8	7	1.1250	0.7630	68700	1290	1755	1160	1580	965	1310		
	12	1.1250	0.8560	77000	1445	1965	1300	1770	1085	1475		
1 1/4	7	1.2500	0.9690	87200	1815	2470	1635	2225	1365	1855		
	12	1.2500	1.0730	96600	2015	2740	1810	2460	1510	2055		
1 3/8	6	1.3750	1.1550	104000	2385	3245	2145	2915	1785	2430		
	12	1.3750	1.3150	118100	2705	3680	2435	3310	2030	2760		
1 1/2	6	1.5000	1.4050	126500	3165	4305	2845	3870	2370	3225		
	12	1.5000	1.5800	142200	3555	4835	3200	4350	2665	3625		

Size	TPI	Bolt Dia	Tensile Stress Area	Clamp Load	Torque (Dry) K=0.17		Torque (Loctite® 242™ or 271™ or Vibra-TITE™ 111 or 140) K= 0.16		Torque (Loctite® 242™ or 271™ or Vibra-TITE™ 111 or 140)		Torque (Loctite® 262™ or VibraTITE™ 131) K=0.15	
		In	**Sq In**	**LB**	**FT-LB**	**[N.m]**	**FT-LB**	**[N.m]**	**FT-LB**	**[N.m]**	**FT-LB**	**[N.m]**
4	40	0.1120	0.00604	380	7	0.8						
	48	0.1120	0.00661	420	8	0.9						
6	32	0.1380	0.00909	580	14	1.5						
	40	0.1380	0.01015	610	14	1.6						
8	32	0.1640	0.01400	900	25	2.8						
	36	0.1640	0.01474	940	26	2.9						
10	24	0.1900	0.01750	1120	36	4.1						
	32	0.1900	0.02000	1285	42	4.7						
1/4	20	0.2500	0.0318	2020	86	9.7	80	9				
	28	0.2500	0.0364	2320	99	11.1	95	11				

Size	TPI	Bolt Dia	Tensile Stress Area	Clamp Load	Torque (Dry) K=0.17		Torque (Loctite® 242™ or 271™ or Vibra-TITE™ 111 or 140) K= 0.16		Torque (Loctite® 262™ or VibraTITE™ 131) K=0.15	
		In	**Sq In**	**LB**	**FT-LB**	**[N.m]**	**FT-LB**	**[N.m]**	**FT-LB**	**[N.m]**
5/16	18	0.3125	0.0524	3340	15	20	14	19	15	20
	24	0.3125	0.0580	3700	15	20	15	21	15	20
3/8	16	0.3750	0.0775	4940	25	35	25	34	25	34
	24	0.3750	0.0878	5600	30	40	28	38	25	34
7/16	14	0.4375	0.1063	6800	40	55	40	54	35	48
	20	0.4375	0.1187	7550	45	60	44	60	40	54
1/2	13	0.5000	0.1419	9050	65	90	60	82	55	75
	20	0.5000	0.1599	10700	75	100	71	97	65	88
9/16	12	0.5625	0.1820	11600	90	120	87	118	80	109
	18	0.5625	0.2030	12950	105	145	97	132	90	122
5/8	11	0.6250	0.2260	14400	130	175	120	163	115	156
	18	0.6250	0.2560	16300	145	195	136	185	125	170
3/4	10	0.7500	0.3340	21300	225	305	213	290	200	272
	16	0.7500	0.3730	23800	255	345	238	324	225	306

Size	TPI	Bolt Dia	Tensile Stress Area	Clamp Load	Torque (Dry) K=0.17		Torque (Loctite® 242™ or 271™ or Vibra-TITE™ 111 or 140) K= 0.16		Torque (Loctite® 262™ or VibraTITE™ 131) K=0.15	
		In	**Sq In**	**LB**	**FT-LB**	**[N.m]**	**FT-LB**	**[N.m]**	**FT-LB**	**[N.m]**
7/8	9	0.8750	0.4620	29400	365	495	343	466	320	435
	14	0.8750	0.5090	32400	400	545	378	514	355	483
1	8	1.0000	0.6060	38600	545	740	515	700	480	653
	12	1.0000	0.6630	42200	600	815	563	765	530	721
1 1/8	7	1.1250	0.7630	42300	675	920	635	863	595	809
	12	1.1250	0.8560	47500	755	1025	713	969	670	911
1 1/4	7	1.2500	0.9690	52800	955	1300	897	1219	840	1142
	12	1.2500	1.0730	59600	1055	1435	993	1351	930	1265
1 3/8	6	1.3750	1.1550	64100	1250	1700	1175	1598	1100	1496
	12	1.3750	1.3150	73000	1420	1930	1338	1820	1255	1707
1 1/2	6	1.5000	1.4050	78000	1660	2260	1560	2122	1465	1992
	12	1.5000	1.5800	87700	1865	2535	1754	2385	1645	2237

Size	TPI	Bolt Dia	Tensile Stress Area	Clamp Load	Torque (Dry or Loctite® 263) K=0.17		Torque (Loctite® 242™ or 271™ or Vibra-TITE™ 111 or 140) K= 0.16		Torque (Loctite® 262™ or VibraTITE™ 131) K=0,15	
		In	**Sq In**	**LB**	**FT-LB**	**[N.m]**	**FT-LB**	**[N.m]**	**FT-LB**	**[N.m]**
4	40	0.1120	0.00604							
	48	0.1120	0.00661							
6	32	0.1380	0.00909							
	40	0.1380	0.01015							
8	32	0.1640	0.01400							
	36	0.1640	0.01474	1320	37	4				
10	24	0.1900	0.01750	1580	51	6				
	32	0.1900	0.02000	1800	58	7				
1/4	20	0.2500	0.0318	2860	122	14	114	13		
	28	0.2500	0.0364	3280	139	16	131	15		

Size	TPI	Bolt Dia	Tensile Stress Area	Clamp Load	Torque (Dry or Loctite® 263) K=0.17		Torque (Loctite® 242™ or 271™ or Vibra-TITE™ 111 or 140) K= 0.16		Torque (Loctite® 262™ or VibraTITE™ 131) K=0,15	
		In	**Sq In**	**LB**	**FT-LB**	**[N.m]**	**FT-LB**	**[N.m]**	**FT-LB**	**[N.m]**
5/16	18	0.3125	0.0524	4720	20	25	20	25	20	25
	24	0.3125	0.0580	5220	25	35	20	25	20	25
3/8	16	0.3750	0.0775	7000	35	50	35	50	35	50
	24	0.3750	0.0878	7900	40	55	40	55	35	50
7/16	14	0.4375	0.1063	9550	60	80	55	75	50	70
	20	0.4375	0.1187	10700	65	90	60	80	60	80
1/2	13	0.5000	0.1419	12750	90	120	85	115	80	110
	20	0.5000	0.1599	14400	100	135	95	130	90	120
9/16	12	0.5625	0.1820	16400	130	175	125	170	115	155
	18	0.5625	0.2030	18250	145	195	135	185	130	175
5/8	11	0.6250	0.2260	20350	180	245	170	230	160	220
	18	0.6250	0.2560	23000	205	280	190	260	180	245
3/4	10	0.7500	0.3340	30100	320	435	300	410	280	380
	16	0.7500	0.3730	33600	355	785	335	455	315	430

Size	TPI	Bolt Dia	Tensile Stress Area	Clamp Load	Torque (Dry or Loctite® 263) K=0.17		Torque (Loctite® 242™ or 271™ or Vibra-TITE™ 111 or 140) K= 0.16		Torque (Loctite® 262™ or VibraTITE™ 131) K=0,15	
		In	**Sq In**	**LB**	**FT-LB**	**[N.m]**	**FT-LB**	**[N.m]**	**FT-LB**	**[N.m]**
7/8	9	0.8750	0.4620	41600	515	700	485	660	455	620
	14	0.8750	0.5090	45800	570	775	535	730	500	680
1	8	1.0000	0.6060	51500	730	995	685	930	645	875
	12	1.0000	0.6630	59700	845	1150	795	1080	745	1015
1 1/8	7	1.1250	0.7630	68700	1095	1490	1030	1400	965	1310
	12	1.1250	0.8560	77000	1225	1665	1155	1570	1085	1475
1 1/4	7	1.2500	0.9690	87200	1545	2100	1455	1980	1365	1855
	12	1.2500	1.0730	96600	1710	2325	1610	2190	1510	2055
1 3/8	6	1.3750	1.1550	104000	2025	2755	1905	2590	1785	2430
	12	1.3750	1.3150	118100	2300	3130	2165	2945	2030	2760
1 1/2	6	1.5000	1.4050	126500	2690	3660	2530	3440	2370	3225
	12	1.5000	1.5800	142200	3020	4105	2845	3870	2665	3625

Size	TPI	Bolt Dia	Tensile Stress Area	Clamp Load Note 4	Torque (Dry) K=0.17		Torque (Loctite® 242™ or 271™ or Vibra-TITE™ 111 or 140) or Precoat® 85 K=0.16		Torque (Loctite® 262™ or Vibra-TITE™ 131) K=0.15	
		In	Sq In	LB	FT-LB	[N.m]	FT-LB	[N.m]	FT-LB	[N.m]
4	40	0.1120	0.00604							
	48	0.1120	0.00661							
6	32	0.1380	0.00909							
	40	0.1380	0.01015							
8	32	0.1640	0.01400							
	36	0.1640	0.01474							
10	24	0.1900	0.01750							
	32	0.1900	0.02000							
1/4	20	0.2500	0.0318	2860	122	14	114	13		
	28	0.2500	0.0364	3280	139	16	131	15		

Size	TPI	Bolt Dia	Tensile Stress Area	Clamp Load Note 4	Torque (Dry) K=0.17		Torque (Loctite® 242™ or 271™ or Vibra-TITE™ 111 or 140) or Precoat® 85 K=0.16		Torque (Loctite® 262™ or Vibra-TITE™ 131) K=0.15	
		In	Sq In	LB	FT-LB	[N.m]	FT-LB	[N.m]	FT-LB	[N.m]
5/16	18	0.3125	0.0524	4720	20	25	20	25	20	25
	24	0.3125	0.0580	5220	25	35	20	25	20	25
3/8	16	0.350	0.0775	7000	35	50	35	50	35	50
	24	0.3750	0.0878	7900	40	55	40	55	35	50
7/16	14	0.4375	0.1063	9550	60	80	55	75	50	70
	20	0.4375	0.1187	10700	65	90	60	80	60	80
1/2	13	0.5000	0.1419	12750	90	120	85	115	80	110
	20	0.5000	0.1599	14400	100	135	95	130	90	120
9/16	12	0.5625	0.1820	16400	130	175	125	170	115	155
	18	0.5625	0.2030	18250	145	195	135	185	130	175
5/8	11	0.6250	0.2260	20350	180	245	170	230	160	220
	18	0.6250	0.2560	23000	205	280	190	260	180	245
3/4	10	0.7500	0.3340	30100	320	435	300	415	280	380
	16	0.7500	0.3730	33600	355	485	335	455	315	430

Size	TPI	Bolt Dia	Tensile Stress Area	Clamp Load See Note 4	Torque (Dry) K=0.17		Torque (Loctite® 242™ or 271™ or Vibra-TITE™ 111 or 140) or Precoat® 85 K=0.16		Torque (Loctite® 262™ or VibraTITE™ 131) K=0,15	
		In	Sq In	LB	FT-LB	[N.m]	FT-LB	[N.m]	FT-LB	[N.m]
7/8	9	0.8750	0.4620	41600	515	700	485	660	455	620
	14	0.8750	0.5090	45800	570	775	535	730	500	680
1	8	1.0000	0.6060	54500	730	995	685	930	645	875
	12	1.0000	0.6630	59700	845	1150	795	1080	745	1015
1 1/8	7	1.1250	0.7630	68700	1095	1490	1030	1400	965	1310
	12	1.1250	0.8560	77000	1225	1665	1155	1570	1085	1475
1 1/4	7	1.2500	0.9690	87200	1545	2100	1455	1980	1365	1855
	12	1.2500	1.0730	96600	1710	2325	1610	2190	1510	2055
1 3/8	6	1.3750	1.1550	104000	2025	2755	1905	2590	1785	2430
	12	1.3750	1.3150	118100	2300	3130	2165	2945	2030	2760
1 1/2	6	1.5000	1.4050	126500	2690	3660	2530	3440	2370	3225
	12	1.5000	1.5800	142200	3020	4105	2845	3870	2665	3625

NOTES:

1. These torque values do not apply to cadmium plated fasteners

2. All torque values are static torque measured per standard audit methods tolerance = ±10%

3. * assembly uses hardened washer

4. Clamp load listed for SHCS is same as grade 8 or class 10.9 and does not represent full strength capability of shcs. If higher load is required, additional testing is required.

Metric

Size	Pitch	Tensile Stress Area	Clamp Load See Note 4	Torque (Dry or Loctite® 263™)	Torque (Lube)	Torque (Loctite® 262™ or 271™or Vibra-TITE™131)	Torque (Loctite® 242™ or 271™or Vibra-TITE™111 or 141)
		Sq mm	**KN**	**[N.m]**		**[N.m]**	
3	0.5	5.03	2.19	1.3	1.0	1.2	1.4
3.5	0.6	6.78	2.95	2.1	1.6	1.9	2.3
4	0.7	8.78	3.82	3.1	2.3	2.8	3.4
5	0.8	14.20	6.18	6.2	4.6	5.6	6.8
6	1	20.10	8.74	11	7.9	9.4	12
7	1	28.90	12.6	18	13	16	19
8	1.25	36.60	15.9	26	19	23	28
10	1.5	58.00	25.2	50	38	45	55
12	1.75	84.30	36.7	88	66	79	97
14	2	115	50.0	140	105	126	154
16	2	157	68.3	219	164	197	241
18	2.5	192	83.5	301	226	271	331
20	2.5	245	106.5	426	320	383	469
22	2.5	303	132.0	581	436	523	639
24	3	353	153.5	737	553	663	811
27	3	459	199.5	1080	810	970	1130
30	3.5	561	244.0	1460	1100	1320	1530
33	3.5	694	302.0	1990	1490	1790	2090
36	4	817	355.5	2560	1920	2300	2690
42	4.5	1120	487.0	4090	3070	3680	4290

NOTES:

1. These torque values do not apply to cadmium plated fasteners

2. All torque values are static torque measured per standard audit methods tolerance = ±10%

3. * assembly uses hardened washer

4. Clamp load listed for SHCS is same as grade 8 or class 10.9 and does not represent full strength capability of shcs. If higher load is required, additional testing is required.

Size	Pitch	Tensile Stress Area	Clamp Load See Note 4	Torque (Dry or Loctite® 263™) K_0,20	Torque (Loctite® 242™ or 271™ or Vibra-TITE™111 or 140) K=0,18	Torque (Loctite® 262™ or Vibra-TITE™131) K=0,15
		Sq mm	**KN**	**[N.m]**	**[N.m]**	**[N.m]**
3	0.5	5.03	3.13			
3,5	0.6	6.78	4.22			
4	0.7	8.78	5.47			
5	0.8	14.20	8.85			
6	1	20.10	12.5			
7	1	28.90	18.0	25	23	19
8	1.25	36.60	22.8	37	33	27
10	1.5	58.00	36.1	70	65	55
12	1.75	84.30	52.5	125	115	95
14	2	115	71.6	200	180	150
16	2	157	97.8	315	280	235
18	2.5	192	119.5	430	385	325
20	2.5	245	152.5	610	550	460
22	2.5	303	189.0	830	750	625
24	3	353	222.0	1065	960	800
27	3	459	286.0	1545	1390	1160
30	3.5	561	349.5	2095	1885	1575
33	3.5	694	432.5	2855	2570	2140
36	4	817	509.0	3665	3300	2750
42	4.5	1120	698.0	5865	5275	4395

NOTES:

1. These torque values do not apply to cadmium plated fasteners

2. All torque values are static torque measured per standard audit methods tolerance = ±10%

3. * assembly uses hardened washer

4. Clamp load listed for SHCS is same as grade 8 or class 10.9 and does not represent full strength capability of shcs. If higher load is required, additional testing is required

Size	Pitch	Tensile Stress Area	Clamp Load See Note 4	Torque (Dry or Loctite® 263™) K_0,17	Torque (Loctite® 242™ or 271™ or Vibra-TITE™111 or 140) K=0,16	Torque (Loctite® 262™ or Vibra-TITE™131) K=0,15
		Sq mm	**KN**	**[N.m]**	**[N.m]**	**[N.m]**
3	0.5	5.03	2.19	1.1	1.1	1.0
3.5	0.6	6.78	2.95	1.8	1.7	1.5
4	0.7	8.78	3.82	2.6	2.4	2.3
5	0.8	14.20	6.18	5.3	4.9	4.6
6	1	20.10	8.74	9	8.4	7.9
7	1	28.90	12.6	15	14	13
8	1.25	36.60	15.9	22	20	19
10	1.5	58.00	25.2	43	40	38
12	1.75	84.30	36.7	75	70	66
14	2	115	50.0	119	110	105
16	2	157	68.3	186	175	165
18	2.5	192	83.5	256	240	225
20	2.5	245	106.5	362	340	320
22	2.5	303	132.0	494	465	435
24	3	353	153.5	627	590	555
27	3	459	199.5	916	860	810
30	3.5	561	244.0	1245	1170	1100
33	3.5	694	302.0	1694	1595	1495
36	4	817	355.5	2176	2050	1920
42	4.5	1120	487.0	3477	3275	3070

NOTES:

1. These torque values do not apply to cadmium plated fasteners

2. All torque values are static torque measured per standard audit methods tolerance = ±10%

3. * assembly uses hardened washer

4. Clamp load listed for SHCS is same as grade 8 or class 10.9 and does not represent full strength capability of shcs. If higher load is required, additional testing is required

Size	Pitch	Tensile Stress Area	Clamp Load See Note 4	Torque (Dry or Loctite® 263™) K_0.17	Torque (Loctite® 242™ or 271™ or Vibra-TITE™111 or 140) K=0.18	Torque (Loctite® 262™ or Vibra-TITE™131) K=0.15
		Sq mm	**KN**	**[N.m]**	**[N.m]**	**[N.m]**
3	0.5	5.03	3.13			
3.5	0.6	6.78	4.22			
4	0.7	8.78	5.47			
5	0.8	14.20	8.85			
6	1	20.10	12.5	13	12	11
7	1	28.90	18.0	21	20	19
8	1.25	36.60	22.8	31	29	27
10	1.5	58.00	36.1	61	58	55
12	1.75	84.30	52.5	105	100	95
14	2	115	71.6	170	160	150
16	2	157	97.8	265	250	235
18	2.5	192	119.5	365	345	325
20	2.5	245	152.5	520	490	460
22	2.5	303	189.0	705	665	625
24	3	353	222.0	905	850	800
27	3	459	286.0	1315	1235	1160
30	3.5	561	349.5	1780	1680	1575
33	3.5	694	432.5	2425	2285	2140
36	4	817	509.0	3115	2930	2750
42	4.5	1120	698.0	4985	4690	4395

NOTES:

1. These torque values do not apply to cadmium plated fasteners

2. All torque values are static torque measured per standard audit methods tolerance = ±10%

3. * assembly uses hardened washer

4. Clamp load listed for SHCS is same as grade 8 or class 10.9 and does not represent full strength capability of shcs.

If higher load is required, additional testing is required

2.7.Hydraulic Fittings

Torque Specifications for Hydraulic Couplings & Hoses

Hydraulic Coupling Torque Chart O-Ring Port Connectors				
SAE Size	Steel Ports		Non-ferrous Ports	
	ft-lb	Nm	ft-lb	Nm
4	14-16	20-22	9-10	12-13
6	24-26	33-35	15-16	20-21
8	50-60	68-78	30-36	41-47
10	72-80	98-110	43-48	60-66
12	125-135	170-183	75-81	102-110
16	200-220	270-300	120-132	162-180
20	210-280	285-380	126-168	171-228
24	270-360	370-490	162-216	222-294
32	-	-	-	-

Hose End Torque Chart for JIC									
Size		Steel				Brass			
Dash	Frac.	ft-lb		Nm		ft-lb		Nm	
		Min.	Max.	Min.	Max.	Min.	Max.	Min.	Max.
-4	1/4”	10	11	13	15	5	6	6,75	9
-6	3/8”	17	19	23	26	12	15	17	20
-8	1/2”	34	38	47	52	20	24	27,66	33
-10	5/8”	50	56	69	76	34	40	46,33	55
-12	3/4”	70	78	96	106	53	60	72,33	82
-16	1”	94	104	127	141	74	82	100,5	111
-20	1 1/4”	124	138	169	188	75	83	101,5	113
-24	1 1/2”	156	173	212	235	79	87	107	118
-32	2”	219	243	296	329	158	175	214	237

Hose End Torque Chart for Flat-Face O-Ring Seal (Steel)					
Size		Torque Specification			
Dash	Frac.	ft-lb		Nm	
		Min.	Max.	Min.	Max.
-4	1/4”	10	12	14	16
-6	3/8”	18	20	24	27
-8	1/2”	32	40	43	54
-10	5/8”	46	56	60	75
-12	3/4”	65	80	90	110
-14	1”	65	80	90	110
-16	1 1/4”	92	105	125	240
-20	1 1/2”	125	140	170	190
-24	2”	150	180	200	245

3. MAINTENANCE & INSPECTION SCHEDULES

3.1.Scheduled Maintenance

Introduction

Before performing any service or maintenance on the vehicle, follow the shut-down procedure unless otherwise instructed. Ensure telehandler is level, for proper fluid readings.

- Clean lubrication fittings before lubricating.
- After greasing telehandler, cycle all functions several times to distribute lubricants.
- Perform this maintenance procedure without attachment installed.
- Apply a light coating of engine oil to all linkage pivot points.
- Intervals shown are for normal usage and conditions. Adjust intervals for abnormal usage and conditions.
- Check all lubricant levels when lubricant is cool, with the exception of the transmission fluid. For ease of filling hydraulic reservoir, use a funnel with a hose or flexible tube for best results.

WARNING – Maintenance Safety

- After service has been performed, be sure to restore all guards, shields and covers to their original positions before resuming vehicle operation.
- Do not perform any maintenance or repair without the owner's prior authorization. Allow only trained personnel to service the vehicle.
- Warranty repairs can only be carried by an authorized AXCS service.
- All maintenance & service works must be performed by trained and competent personnel who are familiar with mechanical and electrical procedures.

WARNING – Waranty Void

Do not service or repair major components, unless authorized to do so by your AXCS dealer. Any unauthorized repair will void the warranty.

WARNING – Hydraulic Damage Risk

Intermixing different types of hydraulic oils or using oil types other than those originally supplied with this equipment can severely damage all hydraulic components. Before adding a new type of hydraulic oil, hydraulic system must be flushed fully.

Viscosity of Engine Oil

The ambient temperature at the installation site or in the area of application of the engine is decisive for selecting the right viscosity class. Too high a viscosity can lead to starting difficulties, too low a viscosity can endanger the lubricating effect and result in high lubricating oil consumption. At ambient temperatures below -40 °F (-40 °C), the lubricating oil must be pre-heated.

The viscosity is classified according to SAE. Oils suitable for multiple ranges must always be used. Depending on the ambient temperature recommend viscosity classes are shown below;

Depending on the ambient temperature we recommend the following common viscosity classes.

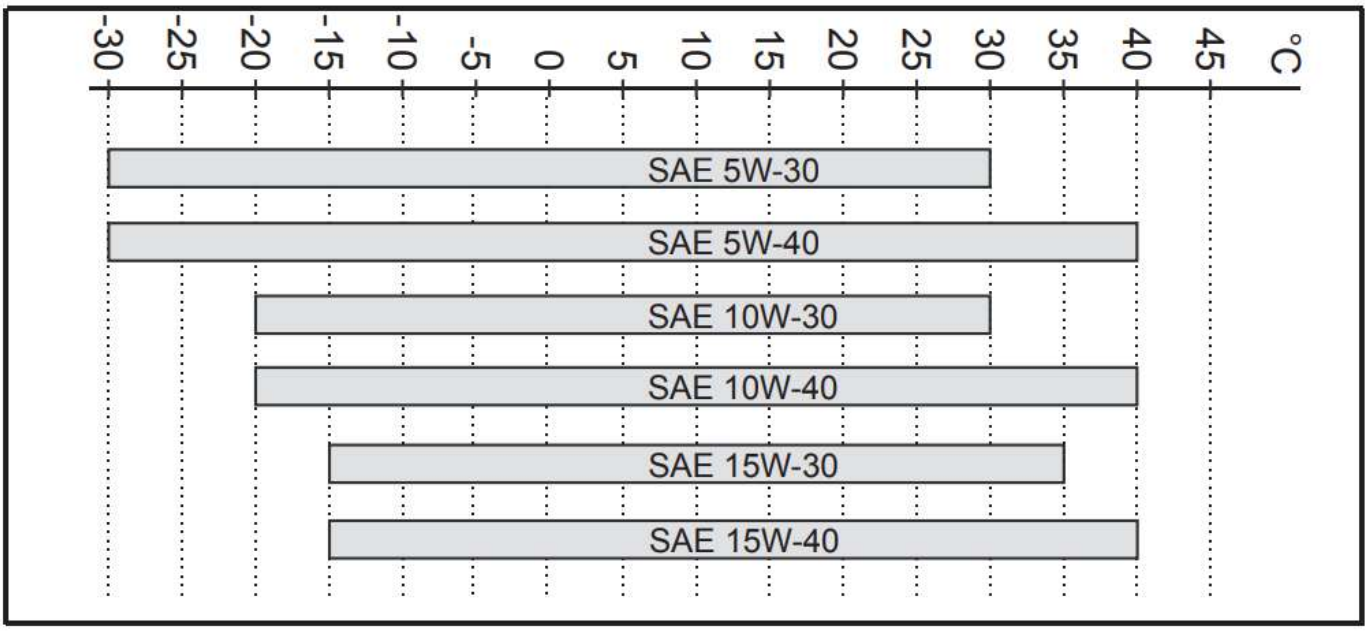

Engine Coolant

In liquid-cooled engines, the coolant must be conditioned and monitored, otherwise the engine could be damaged by:

- corrosion
- cavitation
- freezing
- overheating

Water Quality

The right water quality is important for conditioning the coolant. Clear, clean water within the following analysis
values should always be used:

Analysis Values		**min.**	**max.**	ASTM
ph value		**6.5**	**8.5**	D 1293
Chlorine (Cl)	[mg/l]	**-**	100	D 512 D 4327
Sulphate (SO4)	[mg/l]	**-**	100	D 516
Total hardness (CaCO3)	[mmol/l] [mg/l]	**-**	3,56 356	D 1126
	°dGH]	**-**	20,0	**-**
	[°e]	**-**	25,0	**-**
	[°fH]	**-**	35,6	**-**

The cooling system must be monitored regularly. This also includes checking the coolant system corrosion protection
agent concentration in addition to checking the coolant level.

The coolin g system corrosion protection agent concentration can be checked with conventional test instruments
(e.g. refractometer).

Cooling System Corrosion Protection Agent	Water %	Cold Protection up to
min. 35 %	65 %	-7.6 **°F (**-22 °C)
40 %	60 %	-18.4 **°F (**-28 °C)
45 %	55 %	-31 **°F (**-35 °C)
max. 50 %	50 %	-41.8 **°F (**-41 °C)

Equivalent Table

Maintenance and routine check periods are denoted with operating hours. Time equivalent table is shown below;

Operating Hour	Time Equivalent
10 Hours	Daily
50 Hours	Weekly
250 Hours	3 Months
500 Hours	6 Months
1000 Hours	12 Months
2000 Hours	24 Months

Maintenance Periods

Group	Action	Every 10 Hours or Daily	Every 50 Hours or Weekly	Every 250 Hours or Monthly	Every 500 Hours or 6 Months	Every 1000 Hours or Yearly	Every 2000 Hours	Every 3000 Hours	Every 4000 Hours	In Necessary Cases
DIESEL ENGINE										
Diesel Engine Oil Level	Check	CH								
Coolant Level	Check	CH								
Fuel-Water Separator Filter Filling	Check	CH								
Radiator Core	Clean		C							C
A/C Radiator Core	Clean		C							C
A/C Tension Belt	Check/ Adjust/ Replace			CH	A		R			
Engine Oil	Drain-Replace				D***					
Engine Oil Filter	Replace				D***					
Fuel-Water Separator Filter	Replace				D***					
Fuel Filter	Replace				D***					
Air Filter Outer Element	Replace				D***					CH
Internal Air Filter	Replace				D***					
Diesel Engine DEF Filter	Replace							R		
Fuel Tank	Clean					C				
Diesel Engine Vibration Damper Mounts	Check					CH				
Valve Cavities	Check					CH				
Diesel Engine Water Pump and Thermostat	Check					CH				
Coolant	Drain-Replace						D			
Radiator	Check						CH			
Alternator and Starter Motor	Check						CH			
Turbo Compressor	Check						CH	CH		
Alternator Belt	Check/ Adjust/ Replace				A		R			CH/R
Fuel Line	Check									CH

Group	Action	Every 10 Hours or Daily	Every 50 Hours or Weekly	Every 250 Hours or Monthly	Every 500 Hours or 6 Months	Every 1000 Hours or Yearly	Every 2000 Hours	Every 3000 Hours	Every 4000 Hours	In Neces-sary Cases
TRANSMISSION										
Transmission Oil Level	Check		CH							CH
Transmission Oil	Drain-Re-place					D				
Transmission Oil Filter	Re-place				R***					
Transmission Intake Strain-er	Clean/ Re-place				C	R				
Transmis-sion Transfer Gearbox Oil	Drain-Re-place				D					
Transmission Electrical Controls	Check					CH				
Transmission Pressures	Check						CH			

A = ADJUST	**CH = CHECK**	**V = VENTING**	**D = DRAIN-REPLACE**
R = REPLACE	**C = CLEAN**	**G = GREASE**	**N = NECESSARY CAS-ES**

Group	Action	Every 10 Hours or Daily	Every 50 Hours or Weekly	Every 250 Hours or Monthly	Every 500 Hours or 6 Months	Every 1000 Hours or Yearly	Every 2000 Hours	Every 3000 Hours	Every 4000 Hours	In Neces-sary Cases
FRONT AXLE										
Front Axle Axles and Linkages	Grease			G					G	
Front Axle Oscilla-tion Sleeve	Grease/ Check			G				G		
Front Axle Oil Leve	Check				CH	CH				
Front Final Drive Oil Level	Check				CH	CH				
Front Axle Oil	Drain-Re-place						D			
Front Final Drive Oil**	Drain-Re-place						D			D**
Front Axle Brake Discs Wear	Check								CH	
Front Final Drive Swivel Joint	Check								CH	
Front Final Drive Clearance	Check								CH	
Front Steering Joints	Check								CH	
REAR AXLE										
Rear Axle Axles and Linkages	Grease			G					G	
Rear Axle Oscilla-tion Sleeve	Grease/ Check			G				G		
Rear Axle Oil Level	Check				CH	CH				
Rear Final Drive Oil Level	Check				CH	CH				
Rear Axle Oil	Drain-Re-place						D			
Rear Final Drive Oil**	Drain-Re-place						D			D***
Rear Axle Brake Discs Wear	Check								CH	
Rear Final Drive Swivel Joint	Check			G					CH	
Rear Final Drive Clearance	Check								CH	
Rear Steering Joints	Check								CH	

Group	Action	Every 10 Hours or Daily	Every 50 Hours or Weekly	Every 250 Hours or Monthly	Every 500 Hours or 6 Months	Every 1000 Hours or Yearly	Every 2000 Hours	Every 3000 Hours	Every 4000 Hours	In Necessary Cases
HYDRAULIC										
Hydraulic Oil Level	Check		CH							
Hydraulic Oil	Drain-Replace						D			
Hydraulic Return Filter	Replace					R				
Hydraulic Tank Vent Cover	Replace						R			
Hydraulic Suction Filter	Replace						R			
Brake Accumulator	Replace						R			
Condition of Hydraulic Pipes and Hoses	Check						CH			
Condition of Hydraulic Cylinders	Check						CH			

A = ADJUST	**CH = CHECK**	**V = VENTING**	**D = DRAIN-REPLACE**
R = REPLACE	**C = CLEAN**	**G = GREASE**	**N = NECESSARY CASES**

Group	Action	Every 10 Hours or Daily	Every 50 Hours or Weekly	Every 250 Hours or Monthly	Every 500 Hours or 6 Months	Every 1000 Hours or Yearly	Every 2000 Hours	Every 3000 Hours	Every 4000 Hours	In Necessary Cases
HYDRAULIC										
Hydraulic Oil Level	Check		CH							
Hydraulic Oil	Drain-Replace						D			
Hydraulic Return Filter	Replace					R				
Hydraulic Tank Vent Cover	Replace						R			
Hydraulic Suction Filter	Replace						R			
Brake Accumulator	Replace						R			
Condition of Hydraulic Pipes and Hoses	Check						CH			
Condition of Hydraulic Cylinders	Check						CH			

Group	Action	Every 10 Hours or Daily	Every 50 Hours or Weekly	Every 250 Hours or Monthly	Every 500 Hours or 6 Months	Every 1000 Hours or Yearly	Every 2000 Hours	Every 3000 Hours	Every 4000 Hours	In Necessary Cases
HYDRAULIC										
BRAKE										
Brake System	Venting					V				
Brake System Pres-sure	Check					CH				
Parking Brake	Check					CH				
TELESCOPIC BOOM										
Boom Wear Pads	Grease/ Check	G*		G		CH				
Boom Bearing, Bush-ing and Surface Greas-ing	Grease		G							

Group	Action	Every 10 Hours or Daily	Every 50 Hours or Weekly	Every 250 Hours or Monthly	Every 500 Hours or 6 Months	Every 1000 Hours or Yearly	Every 2000 Hours	Every 3000 Hours	Every 4000 Hours	In Necessary Cases
CABIN										
Windshield Wiper Fluid Level	Check		CH							
Cabin Air Filters	Clean/ Replace		C		R					
Cabin Condenser Cleaning	Check/Clean		C							
Safety Belt	Check					CH				
Mirrors	Check					CH				
Cabin ROPS-FOPS Structure	Check					CH				
A/C Gas	Check/Drain/ Replace					CH		D		
Calibration of Overload	Adjust			A						
ELECTRICITY										
Warning and Boom Limiting System	Check	CH								CH
Condition of Cables and Sockets	Check					CH				
Lighting and Signaling System	Check					CH				
Horn	Check					CH				
Headlights	Adjust									A
Battery	Replace									R

A = ADJUST	**CH = CHECK**	**V = VENTING**	**D = DRAIN-REPLACE**
R = REPLACE	**C = CLEAN**	**G = GREASE**	**N = NECESSARY CASES**

Group	Action	Every 10 Hours or Daily	Every 50 Hours or Weekly	Every 250 Hours or Monthly	Every 500 Hours or 6 Months	Every 1000 Hours or Yearly	Every 2000 Hours	Every 3000 Hours	Every 4000 Hours	In Necessary Cases
CHASSIS										
Chassis Structure	Check					CH				
Joint Bearings and Bushings	Check						CH			
TIRE										
Tire Pressures	Check		CH							
Tire Wheel Torque	Check		CH							
Tire-Rim Condition	Check						CH			

A = ADJUST	**CH = CHECK**	**V = VENTING**	**D = DRAIN-REPLACE**
R = REPLACE	**C = CLEAN**	**G = GREASE**	**N = NECESSARY CASES**

- First maintenance will be done by authorized service in 500 hours.
- It is recommended to change the hydraulic oil and pump filter every 1000 hours in hydrostatic machines,
- (*) Every 10 hours fort he first 50 hours, after every 250 hours,
- (**) If the machine is waited too much, the front-rear axle drive oils must be drained and change every 500 hours,
- (***) It shows mandatory maintenance activity after every 500 hours of operation,

☐You can use the checkboxes in the tablet o make maintenance tracking of your machine,

3.2.Filters, Belts & Parts to be Replaced

This section contains information on replacement times for filters, belts and some parts.

It is critical for the performance and safety of the machine that the information given in the table below is adhered to.

Group	Element	Period
Diesel Engine	Engine Oil Filter	500 Hours
Diesel Engine	Engine Air Filter	500 Hours
Diesel Engine	Engine Primary Fuel Filter	500 Hours
Diesel Engine	Engine Secondary Fuel Filter (Only Tier III Engines)	500 Hours
Diesel Engine	A/C Belt	2000 Hours
Diesel Engine	Alternator Belt	2000 Hours
Diesel Engine	DEF Filter	3000 Hours
A/C Unit	A/C Air Filter	500 Hours
Hydraulic Sys.	Hydraulic Oil Return Line Filter	1000 Hours
Hydraulic Sys.	Hydraulic Tank Suction Filter	2000 Hours
Hydraulic Sys.	Hydraulic Tank Breather Filter	2000 Hours

3.3.Boom Safety Prop

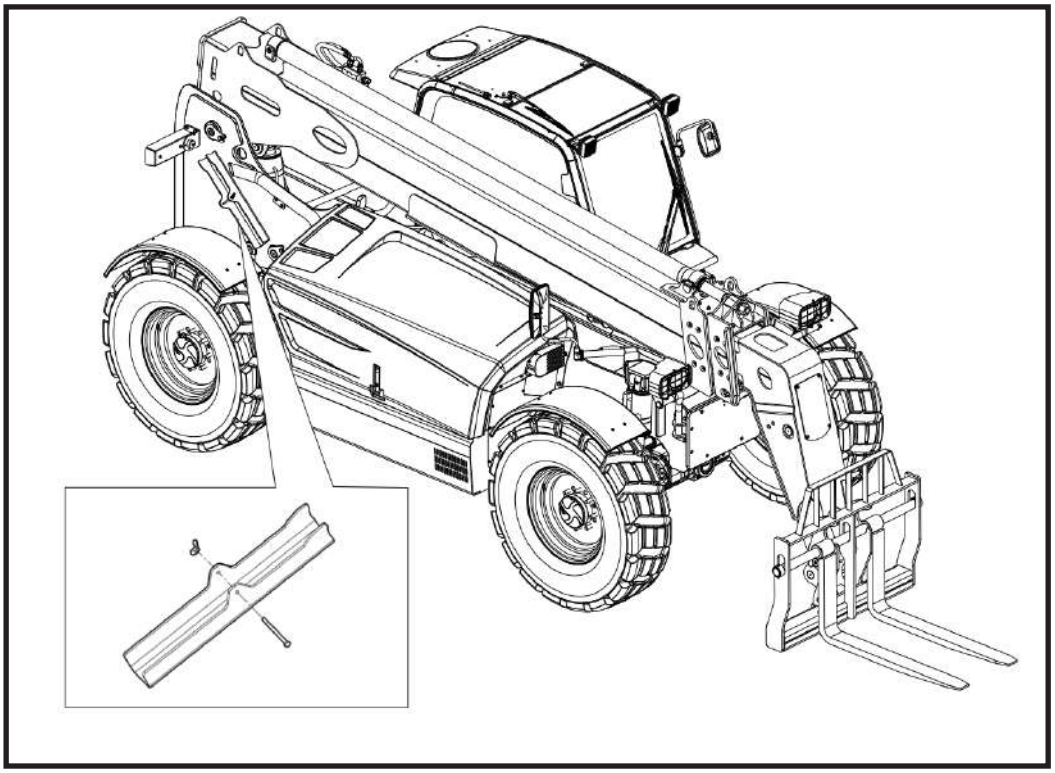

The boom safety prop mechanically supports the raised boom. It is stored on the chassis and is fitted to the boom lift cylinder rod when in use.

DANGER — Crushing hazard. A raised boom can fall if a hydraulic line, hose, cylinder or lock valve fails, or if a control is operated unintentionally. Fit the boom safety prop before working on or under a raised boom. Never rely on the hydraulic system alone to hold the boom.

Note: The safety prop supports the weight of the boom only. Remove the attachment or the load before fitting the prop. Use only the prop supplied with the machine; do not substitute any other object.

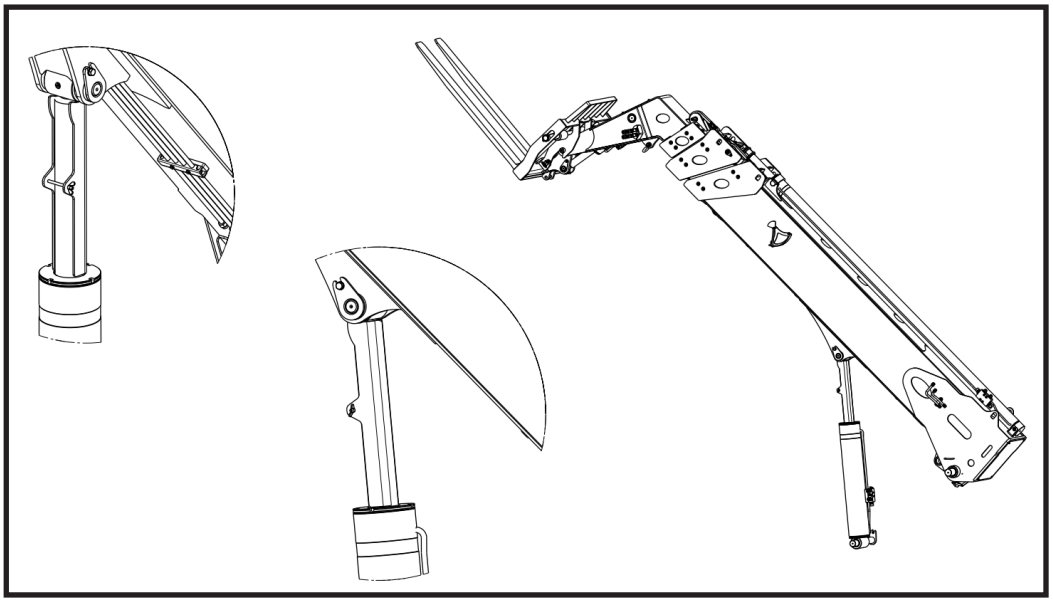

Fitting the Safety Prop

Park the machine on a firm, level surface. Remove the attachment or the load from the carriage. Place the transmission in (N) NEUTRAL, engage the park brake switch and chock the wheels.

1. Fully retract the boom.
2. Release the safety prop from its stowage on the chassis: loosen the wing nuts and remove the prop. Use both hands; the prop is heavy.
3. Raise the boom to its maximum height.
4. Fit the prop over the boom lift cylinder rod and secure it with the safety pin. Verify the pin is fully engaged.
5. Lower the boom slowly until it rests on the prop, then stop lowering. Do not continue to lower against the prop.
6. Turn the engine off, remove the key and place a Do Not Operate tag on the ignition key switch and the steering wheel.

Removing the Safety Prop

1. Verify no personnel or tools remain under or on the boom.
2. Start the engine and raise the boom to its maximum height so the prop is unloaded.
3. Release the safety pin and remove the prop from the cylinder rod. Use both hands.
4. Refit the prop to its stowage on the chassis and tighten the wing nuts by hand. Verify the prop is secure and cannot fall out during operation.
5. Lower the boom.

WARNING — Bodily injury hazard. Do not remove the safety pin while the boom rests on the prop. Raise the boom to unload the prop before releasing the pin.

Engine Oil Level

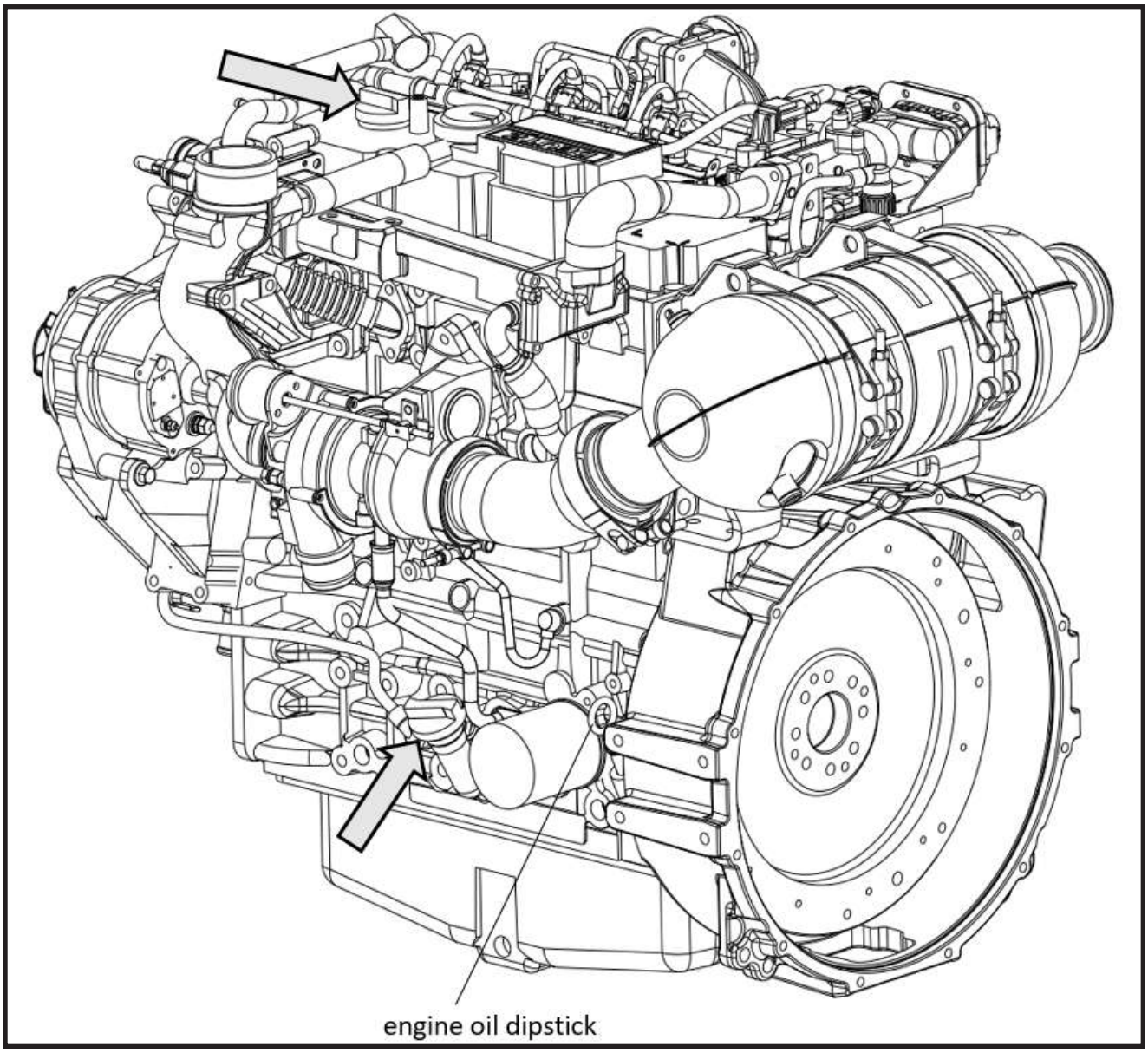

Park the vehicle and stop the engine on a level ground. Wait minimum 15 minutes to let the engine oil drain back into the oil pan.

1. Park the vehicle and stop the engine on a level ground. Wait minimum 15 minutes to let the engine oil to drain back into the oil pan.
2. Remove dipstick, wipe it with a clean cloth, re-insert it and remove to obtain a reading.
3. If the oil level is down, or below the ADD mark, fill with the required amount of oil to bring the level to the FULL mark. (Use either upper or lower fill cap.)

Engine Coolant Level

The cooling system must be monitored regularly. This also includes checking the coolant system corrosion protection agent concentration in addition to checking the coolant level.

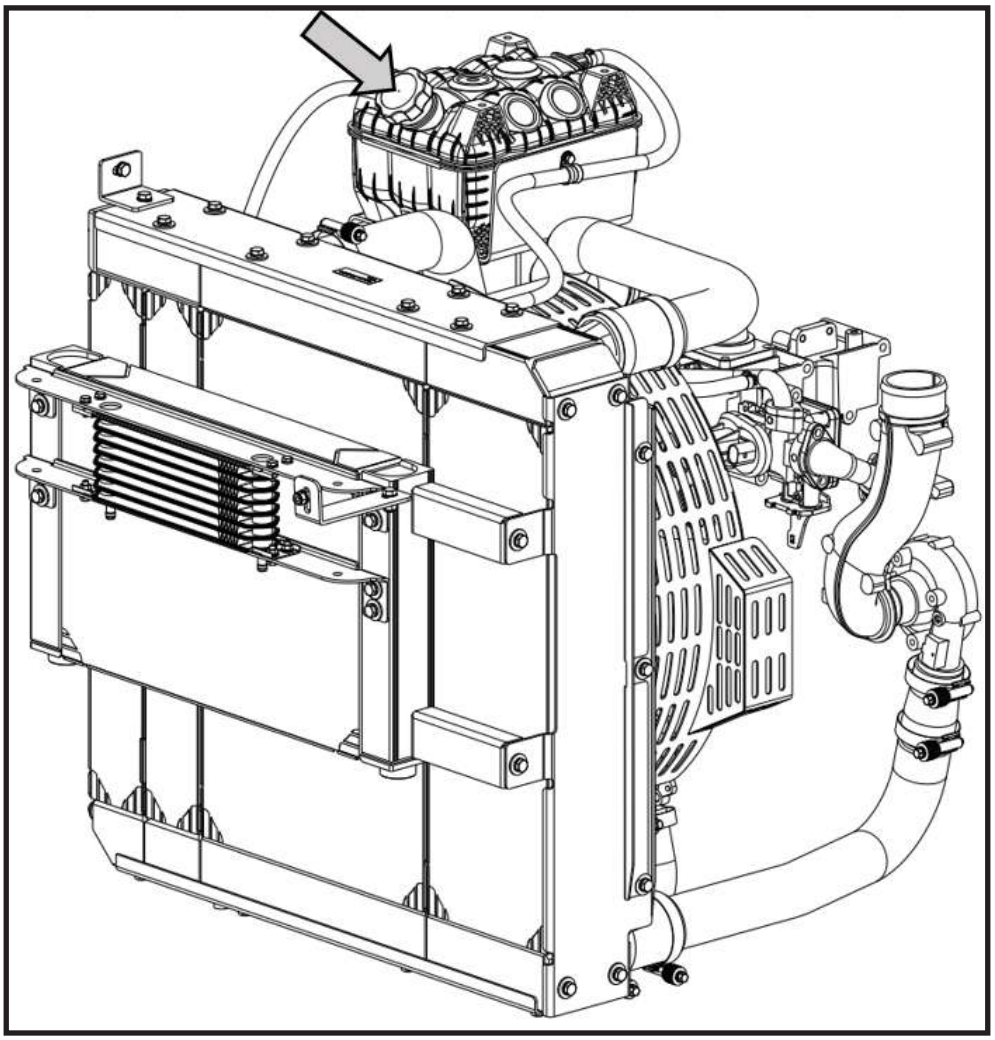

Park the vehicle and stop the engine on a level ground. Wait minimum 15 minutes to let the engine cool down.

1. The coolant must have a prescribed concentration of cooling system corrosion protection agent.
2. Never operate the engine without coolant, even for a short time.
3. The coolant system is designed for coolant top-off only through the expansion tank. Do not add coolant directly to the radiator.

WARNING – Danger of scalding from hot coolant

Cooling system under pressure! Only open the cap when cool! Observe safety regulations and national specifications when handling cooling media.

Fuel Level

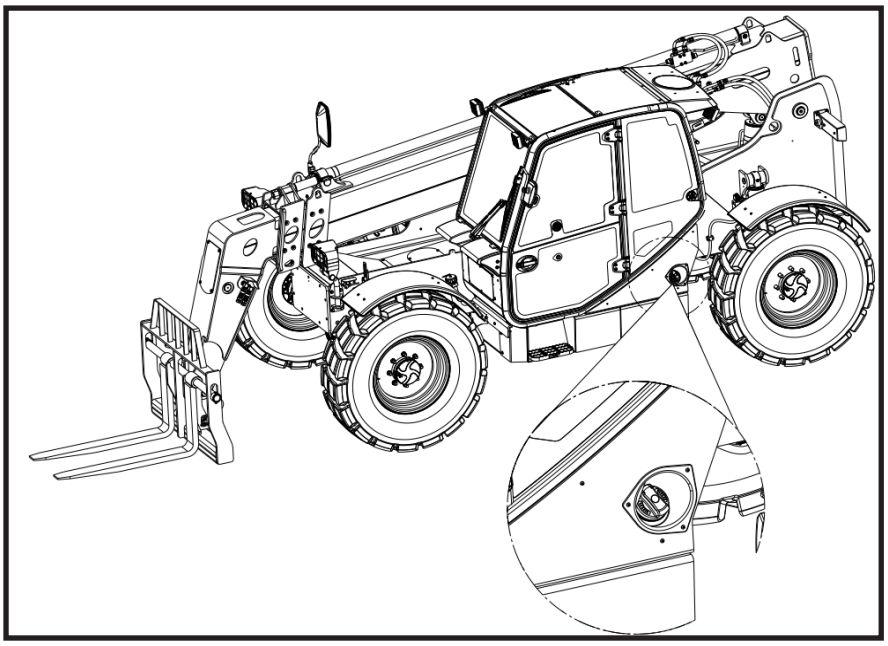

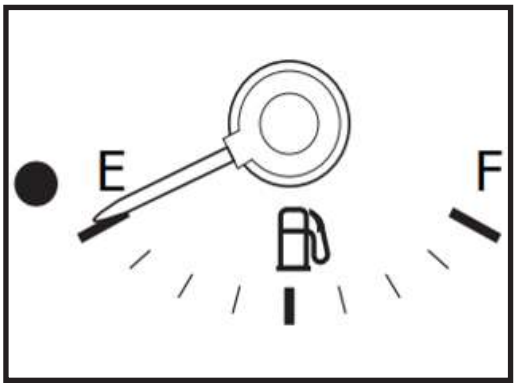

1. Check fuel gauge located in instrument panel in cab.
2. If fuel is low, proceed to fuel source and perform Shut-Down Procedure.
3. Turn and remove fuel tank cap.
4. Add fuel as needed.
5. Replace fuel tank cap.

WARNING – Explosion Risk

- Do not refuel the vehicle with the engine running.
- Refuel the vehicle and charge the battery only in an open, wellventilated area away from sparks, flames and lighted tobacco.
- Do not allow vehicle to run out of fuel during operation.
- To minimize possible static electricity fires, ensure filler nozzle touches rim of filler opening to aid the dissipation of static electricity.

Priming the Fuel System

If the engine runs out of fuel or maintenance on the fuel system has been performed, the fuel system will need to be primed. Refer to the following fuel priming procedure. Refer to the engine manual for additional fuel priming procedures.

WARNING – Risk of Injury

Escaping diesel fuel under pressure can have sufficient force to penetrate the skin. Before applying pressure to the fuel system, be sure all connections are tight and lines and hoses are not damaged. Use a piece of wood or cardboard to search for suspected leaks.

The fuel system is vented via the electric fuel supply pump. In order to ensure that no error messages are generated, no attempt should be made to start the system up whilst venting.

<u>This process is carried out as follows:</u>

Ignition “ON”

The electronic fuel supply pump switches on for 20 seconds in order to vent the fuel system and build up the required fuel pressure. Wait until the electric fuel supply pump is disconnected from the control unit.

Ignition “OFF”

Repeat the process at least 2 times until the fuel system is vented.

WARNING – Risk of Injury

Never use the starter motor to crank the engine in order to prime the fuel system. This may cause the starter motor to overheat and damage the coils, pinion and / or ring gear.

Telescopic Boom Wear Pads

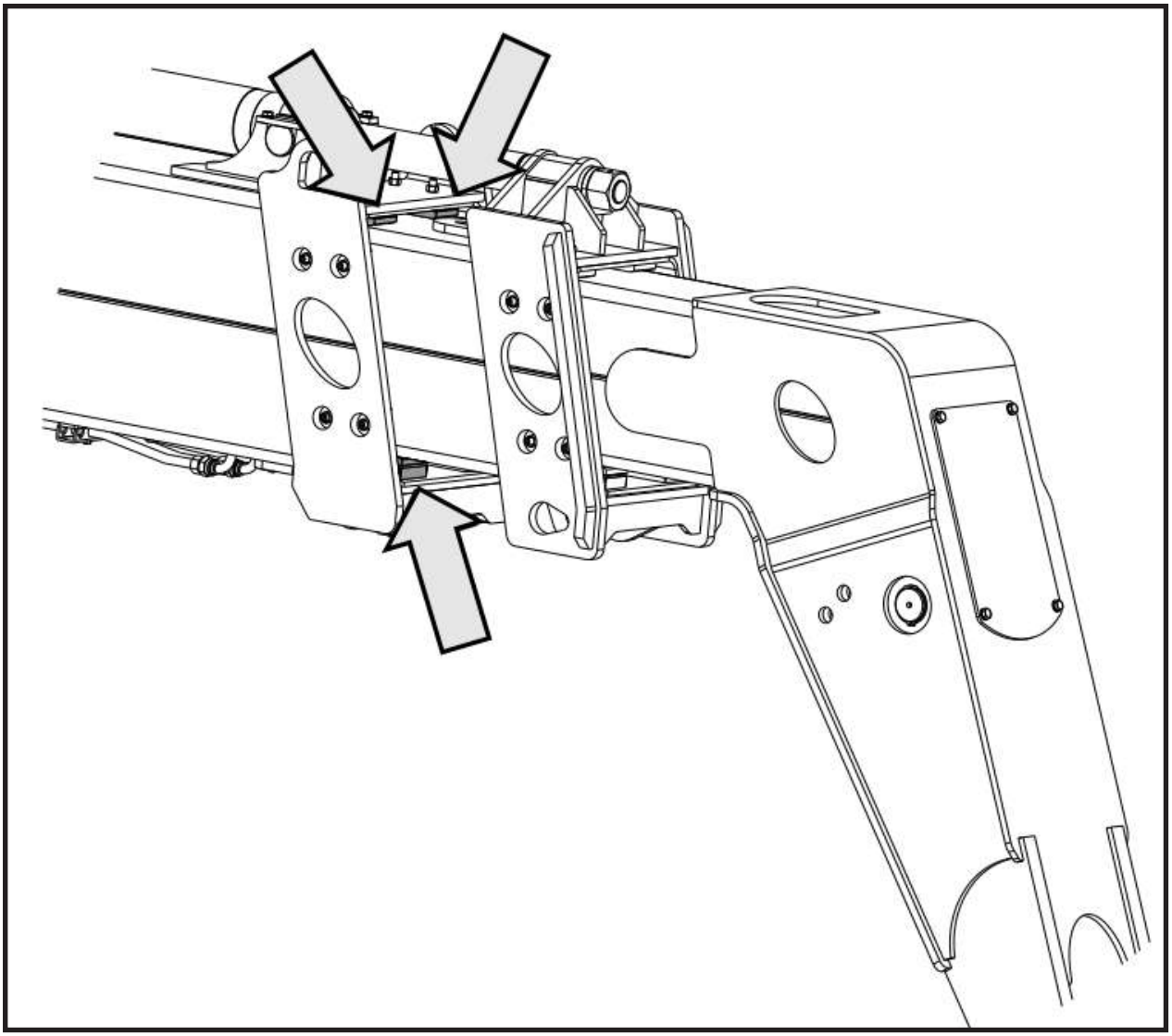

i	INFORMATION

Grease the wear pads on;

• Every 10 hours (for the first 100 operating hours of)

• Every 500 hours (after 100 operating hours)

- Extract the boom to maximum level.
- Apply grease on to the wear pads.
- Retract and extract the boom several times to distribute the grease on the pads evenly.
- Remove excess grease using spatula.

Wear Pads Inspection

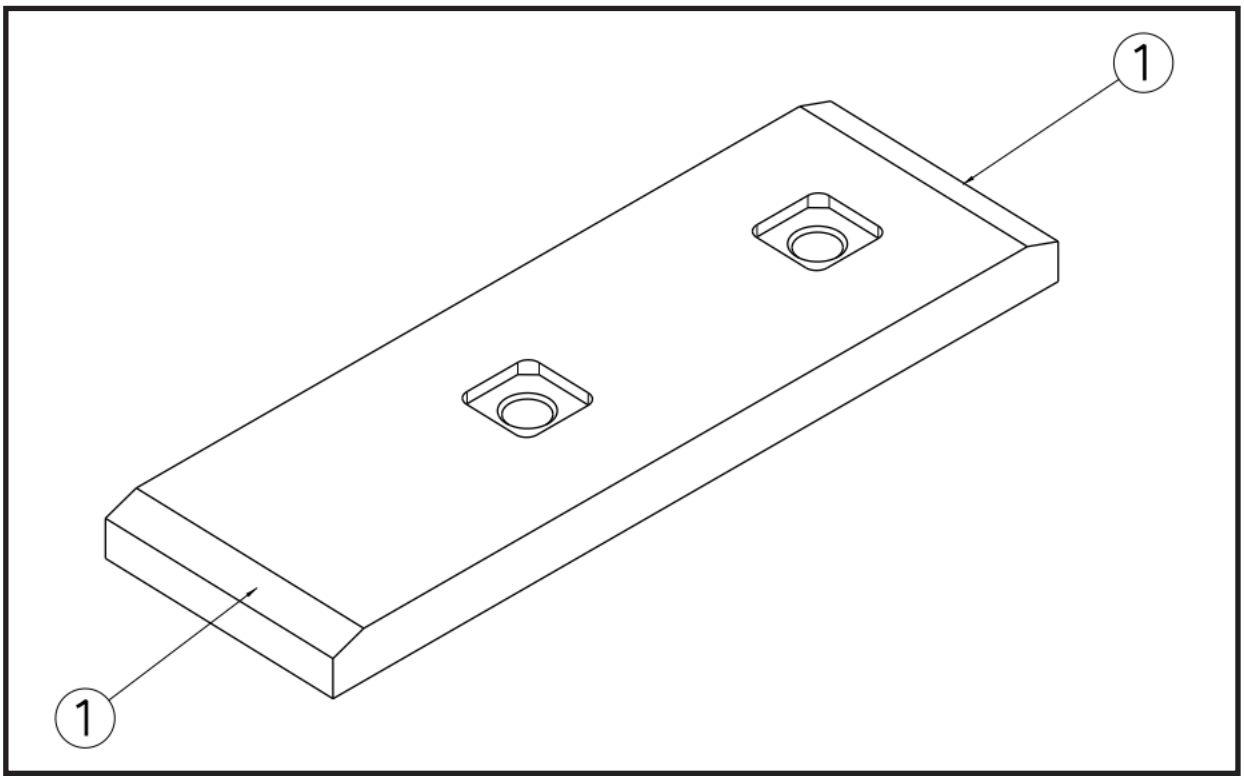

1. Park the machine on a firm, level surface. Place the transmission in (N) NEUTRAL, engage the park brake switch, retract and level the boom.
2. Inspect all wear pads for wear. If the angle indicators (**1**) on the ends of the wear pads are not visible, or show uneven wear, they should be replaced. Always replace pads as a set.

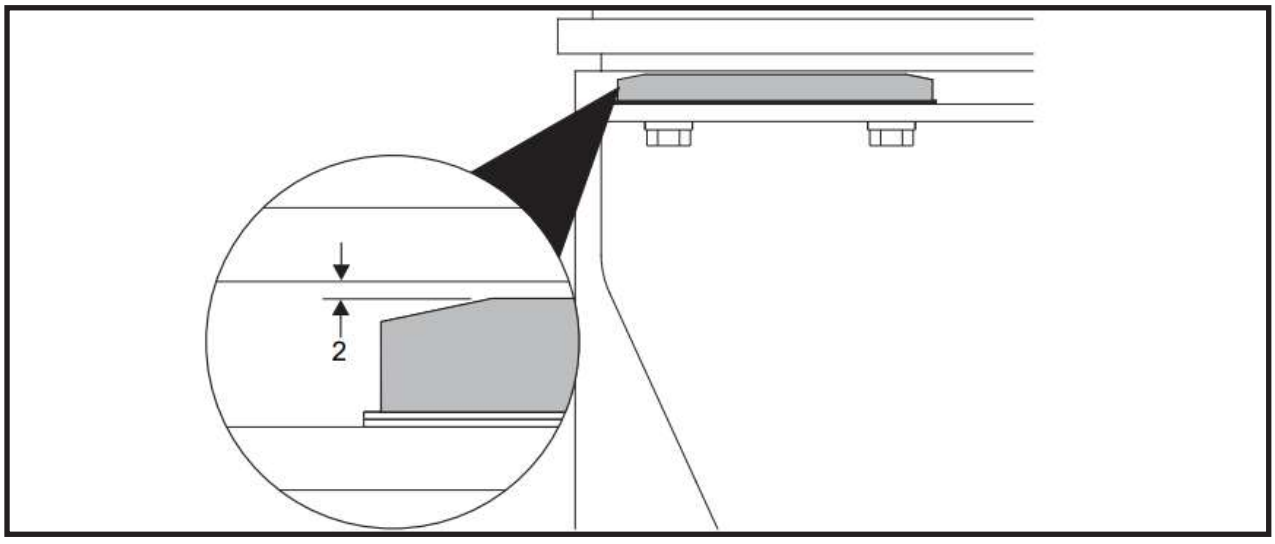

3. Measure all side and top wear pads for proper clearance. Acceptable total gap between the side/top wear pad(s) and the next boom section (**2**) is 0.019 - 0.059 in (0.5 - 1.5 mm).
4. Shim each wear pad to within the above measurement if required.

Wear Pad Arrangement

The boom sections run on replaceable wear pads. Each pad is carried on a pad support plate and is held by threaded studs and nuts; shims behind the pads set the running clearance. Pads are fitted to the top, bottom and both sides of each boom section. Side pads are shimmed between the pad and the support plate, with the stud and nut installed from the inside of the section.

Item	Specification	Retainer	Torque
Pad mounting studs	DIN 916, class 12.9, M12 (lengths vary by position: 40, 50, 60 and 80 mm)	Loctite 270	—
Pad mounting nuts	DIN 934, class 8, M12	—	64 ft-lb (86.9 Nm)
Wear pads	Sizes vary by position and boom section (e.g. 13 x 65 x 200 mm, 13 x 76 x 250 mm, 32 x 50 x 294 mm)	—	—
Shims	Behind the pads, to set clearance	—	—

Note: The values above are confirmed for the TH-1044 boom. Values for the other models are [TBD].

Wear Pad Inspection and Clearance Check

For the inspection and clearance specification, refer to Section 3.4. The total gap between the side/top wear pad(s) and the next boom section must be 0.019 to 0.059 in (0.5 to 1.5 mm).

1. Park the machine on a firm, level surface. Place the transmission in (N) NEUTRAL, engage the park brake switch, retract and level the boom. Turn the engine off.
2. Inspect all wear pads for wear. If the wear indicators on the ends of the pads are not visible, or the pads show uneven wear, replace the pads. Always replace pads as a set.
3. Inspect the pad support plates for cracks and distortion, and verify the mounting studs and nuts are tight.
4. Measure the total gap between the pads and the next boom section at the top, bottom and both sides.
5. Shim the pads as required to bring the gap within specification. Refer to Wear Pad Replacement and Shim Adjustment.

Boom Chain and Sheave Inspection

The boom extend and retract chains are safety-critical components. Chain condition cannot be predicted from opThe boom extend and retract chains are safety-critical components. Chain condition cannot be predicted from operating hours alone; regular inspection is mandatory. Perform this inspection and lubrication after every 30 days of operation, more often when the machine works in wet, dusty, abrasive or corrosive conditions, and after any overload, shock load or suspected damage.

1. Park the machine on a firm, level surface. Place the transmission in (N) NEUTRAL, engage the park brake switch and level the boom.
2. Raise the boom to the horizontal position and fully extend the boom. Turn the engine off.
3. Clean the chains: brush the chain plates with a wire brush to clear the spaces between the plates so the lubricant can penetrate the chain joints. Do not use solvents or grease on the chains.
4. Measure chain elongation in the area where the chain articulates most frequently over the sheaves. Measure over a length of 14 to 16 in (350 to 400 mm); a shorter measurement does not cover a full rotation of the sheave and can miss localized wear. Measuring over an excessive length underestimates the wear.
5. The chain must be under a light load while it is measured, approximately 1% of its tensile strength. A chain measured under full load can read up to 0.25% less wear than its actual condition.
6. Calculate the percentage of elongation: X = ((L - (P x N)) x 100) / L, where P is the chain pitch, N is the number of pitches measured, L is the measured length and X is the percentage of elongation. Compare the result with the limits below.
7. Inspect the link plate edges for worn contours caused by running over the sheaves or by rubbing against guides. Replace the chain when the plate edge is worn by 5% of the plate height. Worn contours also indicate chain misalignment: check the alignment and the clearance.
8. Inspect the link plates for cracks. Cracked plates indicate the chain has been loaded above its fatigue endurance limit. Arc-like cracks between the pin and the plate hole indicate stress corrosion. Fractured plates and enlarged plate holes indicate overload. A chain with any cracked, fractured or distorted plate must be replaced and the cause of the overload corrected.
9. Inspect the outer plates and pin heads for worn surfaces. Wear on these faces indicates misalignment or rubbing against the side flanges: check the alignment and correct the clearance.
10. Check for tight joints. Each joint must articulate freely. Tight joints are caused by rust, corrosion, bent pins or foreign material packed into the joints. Clean and re-lubricate the chain, or replace it if the joints do not free up.
11. Check that no chain components are missing.
12. Inspect the chain for corrosion and pitting. Chains operating in corrosive atmospheres have a reduced wear life.
13. Inspect the pins for abnormal protrusion or turned pins. Pin heads must not have rotated: the riveting marks must remain parallel with the top and bottom edges of the plates. Turned pins are caused by high loading or inadequate lubrication; improve the lubrication, eliminate the overload condition and replace the chain if necessary.
14. Inspect the chain anchorages at both connection levels. Pinned joints: all connection pins must be in place and every cotter pin must be present and correctly spread; a missing cotter pin is cause for immediate removal from service until corrected. Threaded chain connections: threads must be undamaged, the adjusting nuts must be tight and locked against each other, the disc springs must be intact and correctly stacked, and the stud must have adequate remaining thread engagement for future adjustment.
15. Inspect the chain sheaves: the running surfaces must be free of grooving, flat spots and cracks, and each sheave must rotate freely on its pin without excessive radial play. Verify the sheave pin retaining bolts are tight.

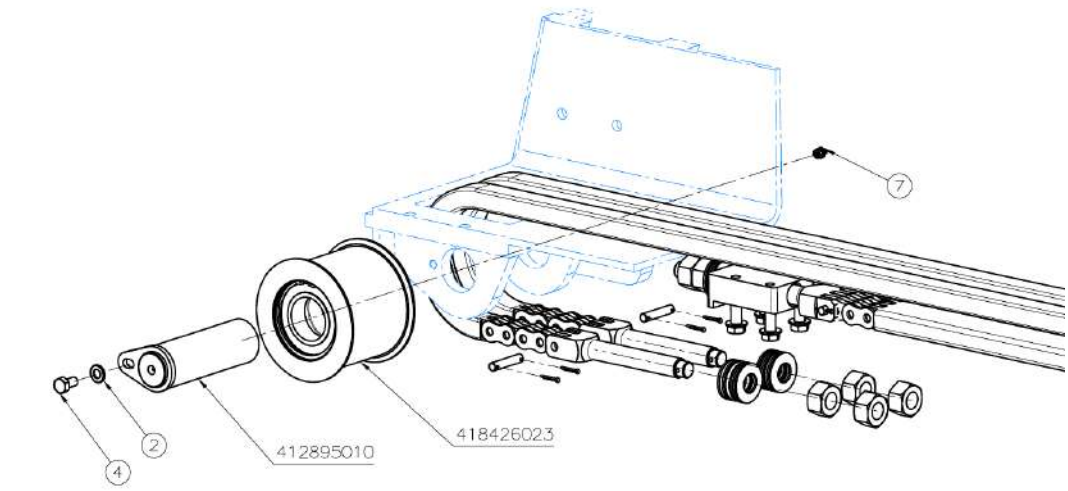

Chain sheave, sheave pin, retaining bolt and grease fitting.

16. Grease the sheave pins through the grease fittings with [TBD] grease every [TBD]. Note: grease is used only on the sheave pin bearings — never on the chains themselves.
17. Apply the limits below. If any limit is exceeded, remove the machine from service until the affected parts are replaced. Always replace chains as a complete set, even when only one component is faulty. When a chain is replaced due to wear, inspect the mating sheaves and replace them if worn.
18. Position the boom so the chains are slack. Lubricant cannot enter the joints of a chain that is under tension.
19. Lubricate the chains by brushing the lubricant into the pin and plate area. The lubricant must penetrate the chain joints: lubricant applied only to the external surfaces prevents rust but does not prevent wear. If a spray is used, it must have a focused beam and a viscosity low enough to reach the internal surfaces. Molykote MKL-N and Kluber Structovis BHD 75 S are suitable for leaf chain.
20. Move the chains through several full cycles so the lubricant works into the joints, then wipe the excess lubricant from the external surfaces.

Note: Do not lubricate chains with grease. Grease does not penetrate the chain joints and traps abrasive particles. Inadequate lubrication is the largest single cause of chain defects, and even temporary dry running shortens chain life considerably.

Cleaning the Chains

External soiling prevents the lubricant from penetrating the chain joints. Brush the chains with a wire brush during routine inspection. If a chain is heavily soiled and steam cleaning is unavoidable, observe the following:

1. Clean the chain with steam or hot water only. Do not use any cleaning additive. Aggressive, caustic or chlorine-bearing agents damage the chain.
2. Immediately after cleaning, blow the water off the chain surfaces and out of the joints with compressed air, moving the chain several times while doing so. Residual water in the joints causes corrosion, stiffness and pitting.
3. Lubricate the chain immediately after cleaning, with the chain in a slack condition. A steam-cleaned chain has lost its lubrication and must be re-lubricated before the machine is returned to service.

Chain Wear Limits

Condition	Limit	Action
Chain elongation	2% of nominal pitch length	Plan the chain replacement. Determine a safe time limit for replacement based on the condition of the chain, the rate of wear since the last inspection, the loads carried, the working environment and the interval to the next inspection.
Chain elongation	3% of nominal pitch length	Replace the chain immediately. The machine must not be operated until the chain is replaced.
Plate edge wear (worn contours)	5% of plate height	Replace the chain and correct the alignment.
Cracked, fractured or distorted plates	Any	Replace the chain and correct the cause of the overload.
Turned or protruding pins	Any	Replace the chain, improve the lubrication and eliminate the overload condition.
Tight joints that do not free up after cleaning and lubrication	Any	Replace the chain.
Missing components	Any	Replace the chain.

Note: Elongation must not be assessed on its own. A chain within the elongation limit must still be replaced if it shows worn surfaces, turned pins, cracked or broken plates, or corrosion.

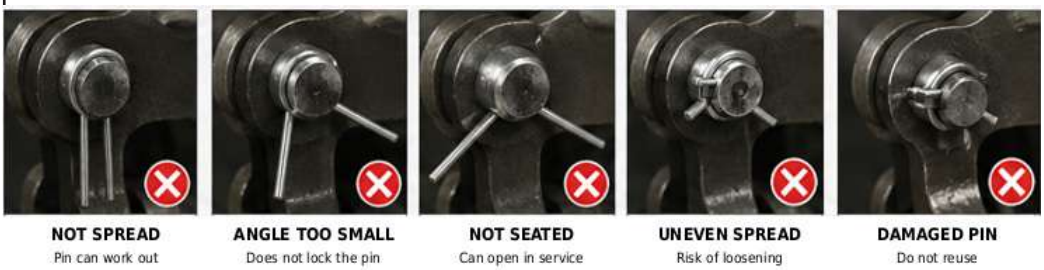

Incorrect cotter pin installation. Any of these conditions is cause for rejection.

Chain Data

Model	Chain type	Pitch (P)	Measurement length
TH-842	BL-844 (4x4) and BL-866 (6x6)	1 in (25.4 mm)	14 to 16 in (350 to 400 mm)
TH-944	BL-844 (4x4) and BL-866 (6x6)	1 in (25.4 mm)	14 to 16 in (350 to 400 mm)
TH-1044	BL-844 (4x4) and BL-866 (6x6)	1 in (25.4 mm)	14 to 16 in (350 to 400 mm)
TH-1056	[TBD]	[TBD]	14 to 16 in (350 to 400 mm)
TH-1256	[TBD]	[TBD]	14 to 16 in (350 to 400 mm)

Air Filter

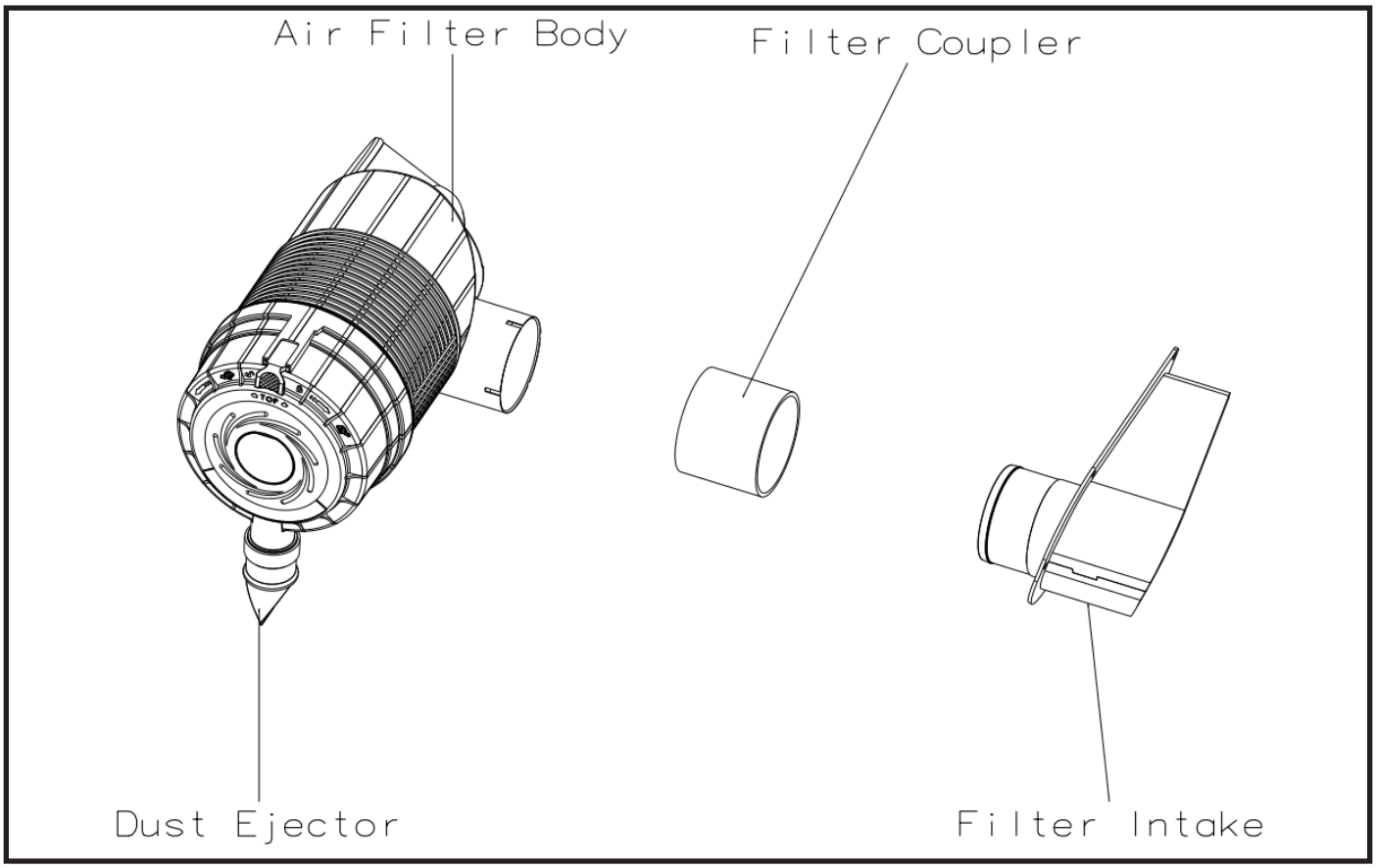

The air filter assembly consists of an outer (primary) filter element and an inner (secondary) filter element. The air filter restriction indicator on the multi-function display is lit whenever the air cleaner is restricted.

The outer element should be replaced anytime the restriction indicator stays lit. The inner element should be replaced every fifth time the outer element is replaced, unless the outer element is damaged or the inner element is visibly dirty.

Along with a daily check of the dust indicator, check that the air cleaner intake hose and clamps, and the mounting bracket hardware are properly secure.

Replace the filter following the procedure below:

1. In order to gain access to the latches and clearance to remove the filter elements, remove the wing nut retaining the air cleaner in its mounting position.
2. Unlatch the three latches on the air cleaner and remove the cover. Clean out any dirt in the cover assembly.
3. Carefully pull the outer element out of the housing. Never remove the inner element unless it is to be replaced.
4. Clean out any dirt in the housing. Leave the inner element installed during this step to prevent debris from entering the engine intake manifold.
5. Use a trouble light inside the new outer element to inspect for bad spots, pinholes and ruptures.

WARNING – Risk of Damage

- Never use an element that is damaged. Severe engine wear and eventual failure can result if dirt gets through a hole in the element.
- Replace the inner element only if it is visibly dirty or if the outer element has been replaced five times. Cleaning the outer element is not recommended.

Before removing the inner element from the housing, clean out any dirt build up in the housing. Leave the inner element installed during this step to prevent debris from entering the engine intake manifold. Remove the inner element.

1. Check the inside of the housing for any damage that may interfere with the elements.
2. Be sure that the element sealing surfaces are clean.
3. Insert the element(s), making sure that they are seated properly.
4. Secure the cover to the housing with the three clamps.
5. Check the hose connections and make sure they are all clamped and tightened properly.
6. Re-position the air cleaner in its mounting position and re-install the wing nut.

Radiator

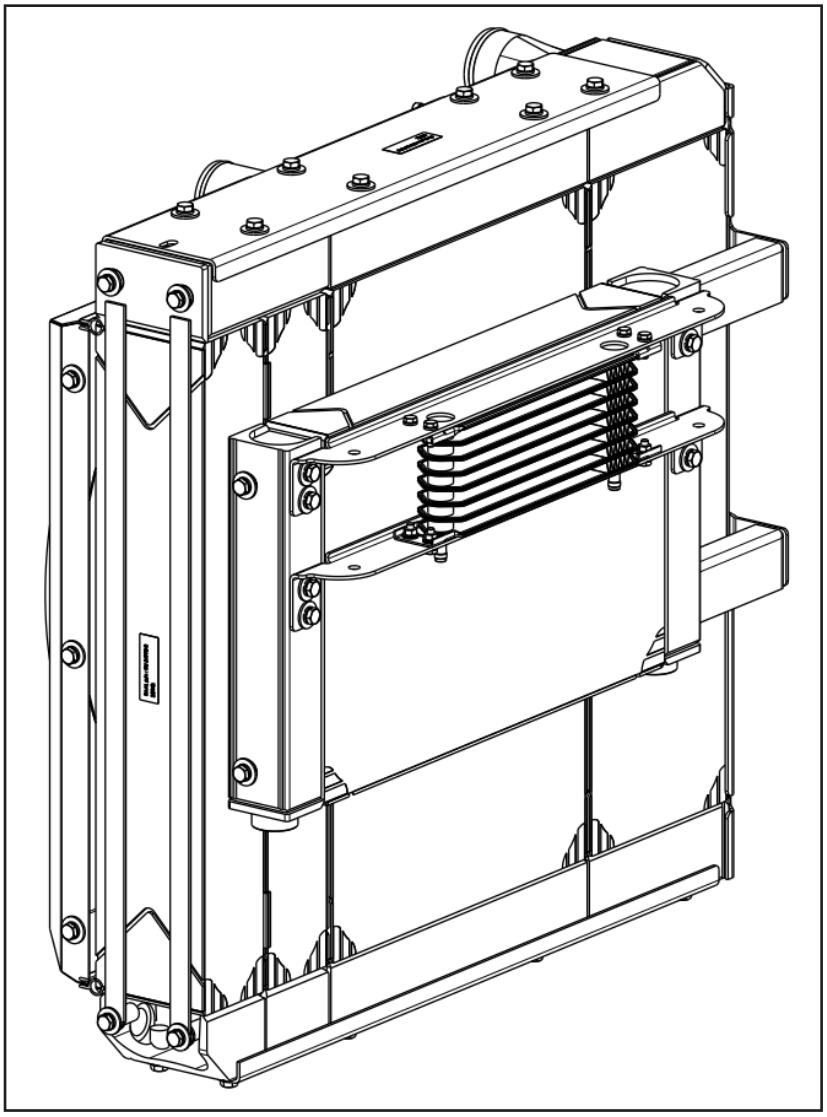

Radiator cleaning is an essential part of vehicle maintenance that will yield positive results in terms of performance and service life. Engine overheat is a problem mostly associated with used vehicles, and regular radiator service will prevent such a hassle.

1. Open engine hatch located on the right side of the vehicle.
2. Before cleaning radiator, clean the grille on the engine hatch.
3. Clean the radiator fins with a soft brush. Remove all debris on it.
4. Use pressurized air to clean the inner sides of radiator fins.
5. To increase the cleaning performance, run the engine while cleaning.

WARNING – Risk of Injury

DO NOT remove the radiator cap after the engine has reached operating temperature or if it is overheated. At operating temperatures, the engine coolant will be extremely hot and under pressure. ALWAYS wait for the engine to cool before attempting to relieve pressure and remove the radiator cap. Failure to heed this warning could result in severe burns.

Oil Filter

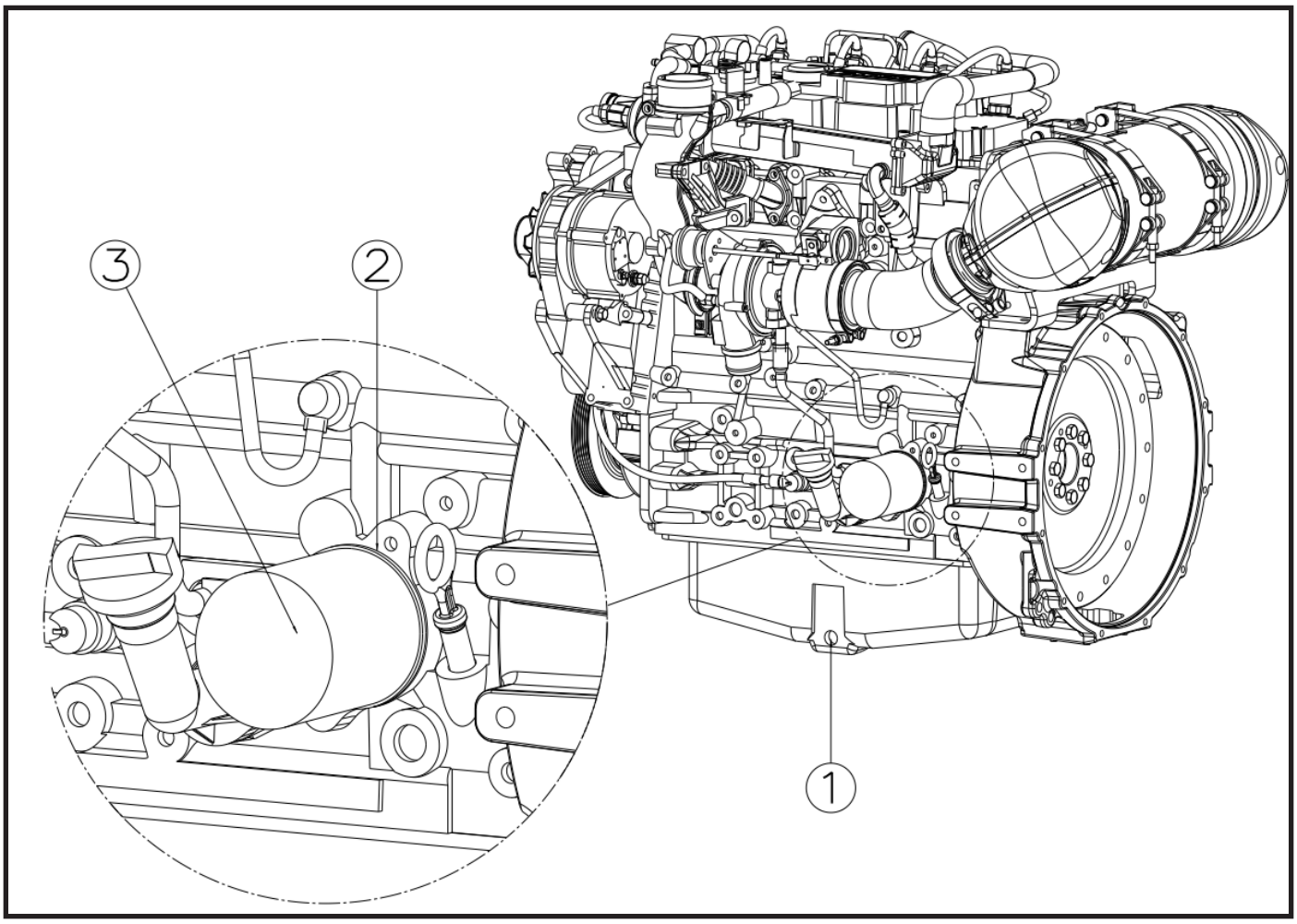

The engine oil filter should be changed at every oil change interval. Remove and discard the disposable filter. Wipe the gasket sealing area of the filter head mounting surface with a clean cloth.

1. Loosen and unscrew the drain plug (**1**) with tool.
2. Collect draining lubricating oil.
3. Clean the sealing surface of the filter support with a lint-free, clean cloth.
4. Ensure that drain plug (**1**) and filter body (**3**) are clean and free from dirt or damage.
5. Oil the gasket (**2**) of the new AXCS original filter cartridge lightly and install the gasket.
6. Install the new filter and filter drain plug (**1**) to the filter body (**3**).
7. Tighten the filter cap to a torque of 18 ft-lb (24 Nm).

⚠	**WARNING** – Risk of Injury
The filter cartridge should never be prefilled. There is a danger of dirt contamination.	

Hydraulic Oil Level

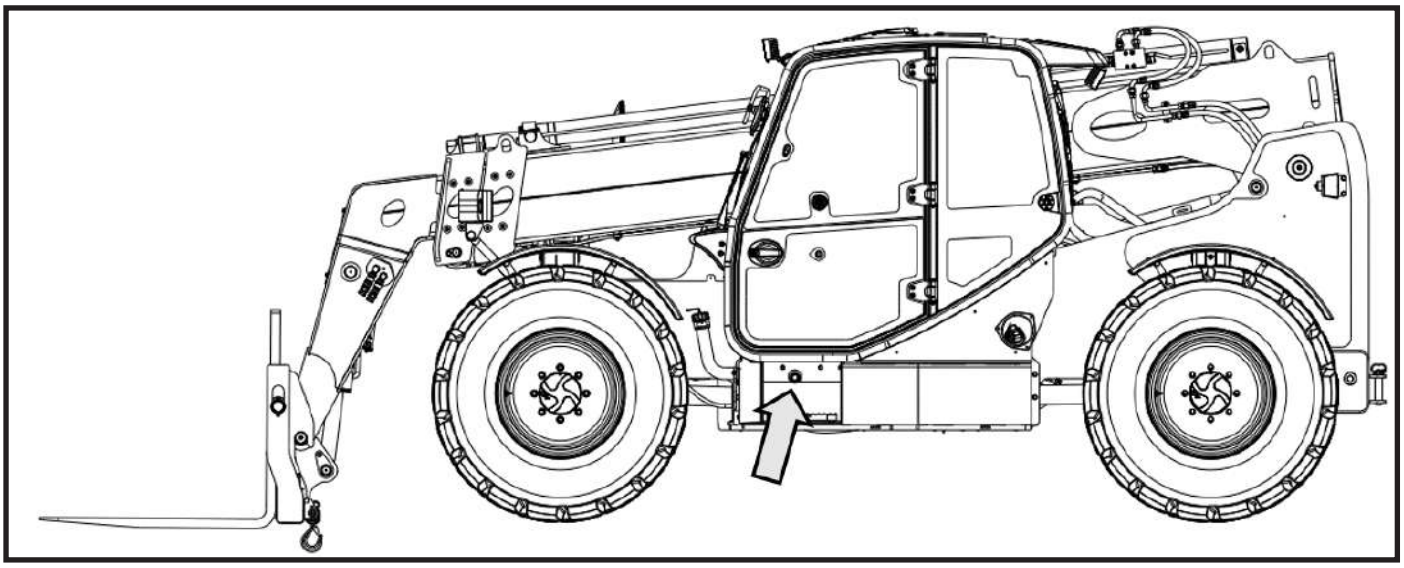

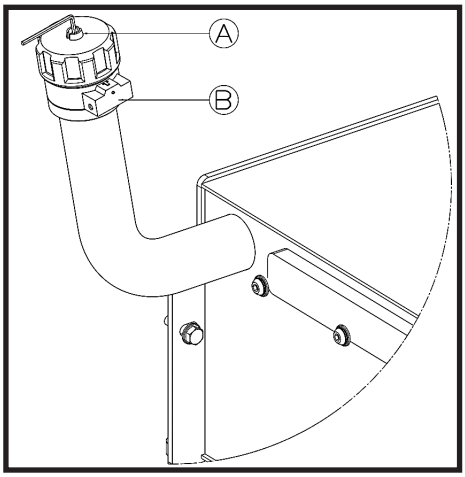

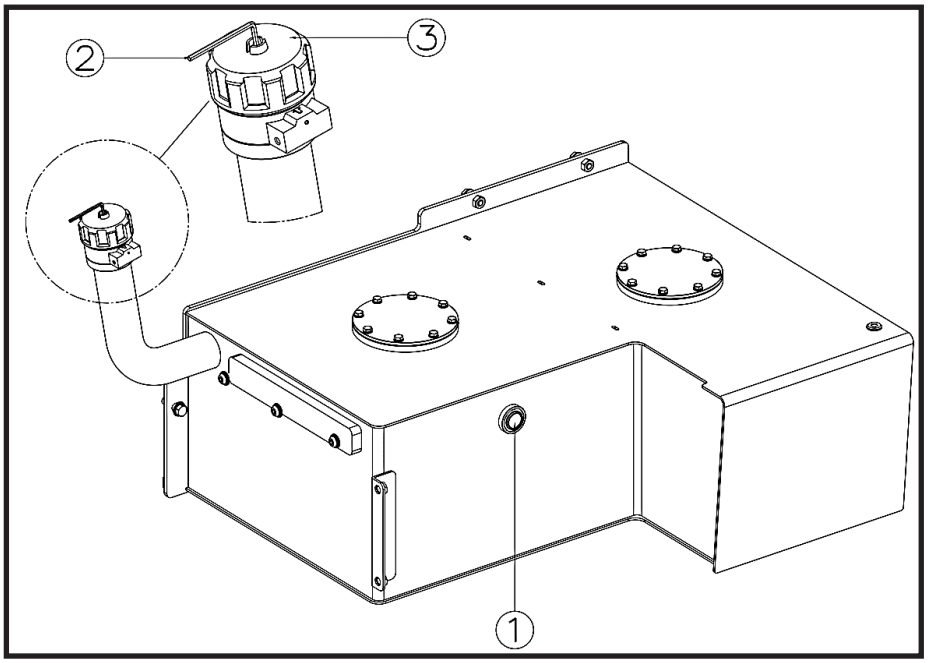

To reach the oil breather filter untighten the screw at the top (A) of the oil tank cap.

To remove the oil tank cap unlock the screw (B) with allen key.

Park the vehicle and stop the engine on a level ground. Wait minimum 15 minutes to let the oil contaminates in the tank.

Check the level of hydraulic level from the indicator (**1**)

1. Level indicator
2. Hydraulic Oil Cap Tank Breather
3. Hydraulic Oil Tank Cap

Belts
Alternator Belt

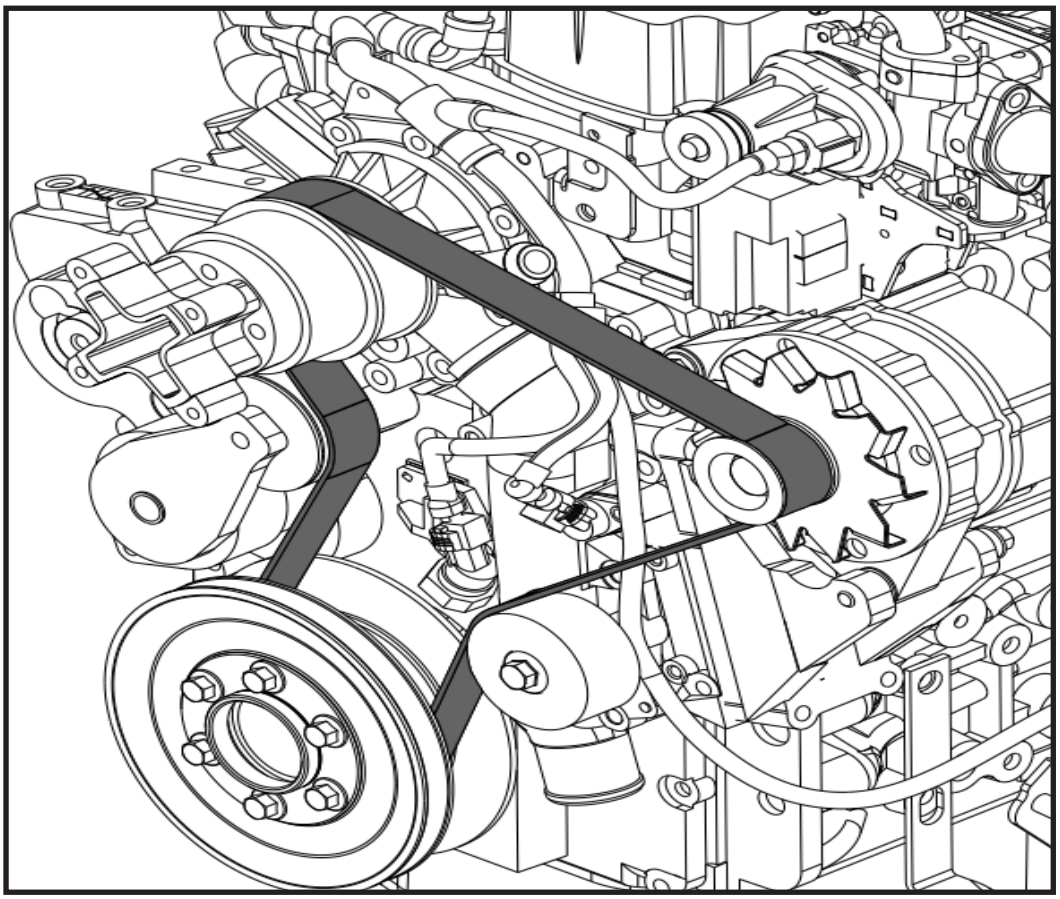

Only carry out work on the belt drive with the engine at a standstill.

After repair work: Check that all guards have been replaced and that all tools have been removed from the engine.

Fuel Filter and Fuel Water Seperator

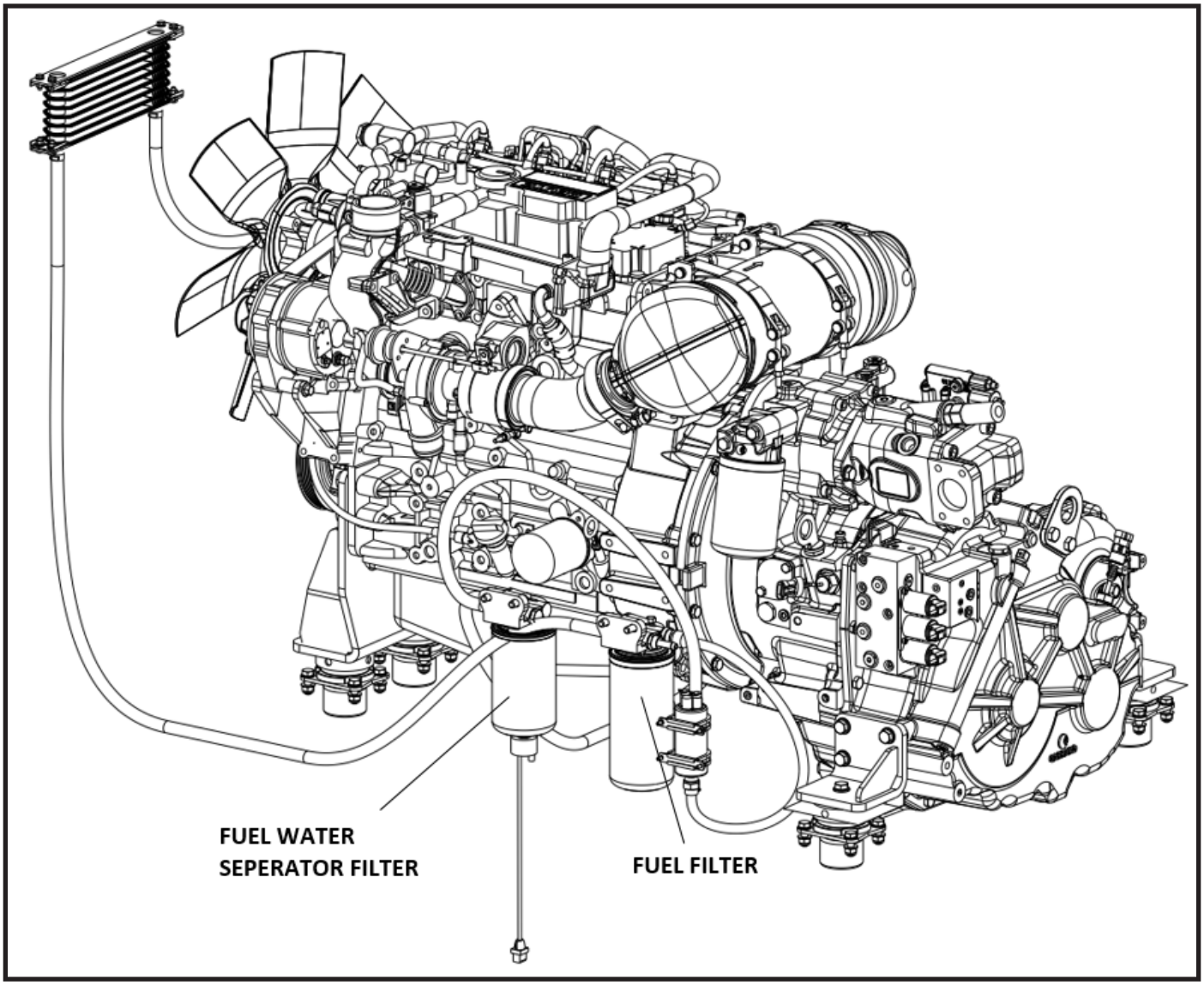

Change the Fuel Pre-Filter Insert

1. Switch off the engine.
2. Shut off the fuel supply to the engine (with high-level tank).
3. Place suitable collecting containers underneath.
4. Electrical connection – Disconnect cable connections.
5. Loosen and remove the drain plug and drain liquid.
6. Disassemble filter insert.
7. Clean any dirt off the sealing surfaces of the new filter cartridge and opposite side of filter head.
8. Wet the sealing surfaces of the filter cartridge slightly with fuel and screw back on to the filter head, clockwise 12-13 ft-lb (17-18 Nm).
9. Replace and tighten the drain plug. – Tightening torque 1.2 ± 0.2 ft-lb (1.6 ±0.3 Nm).
10. Electrical connection – Connect cable connections.
11. Open the fuel shutoff tap and vent the system, see venting the fuel system.

3.5.Transmission Maintenance and Oil Change

Transmission assembly is divided into two modules:

- Powershift (PS), for shifting and reversing.
- Transfer Box (TB), for torque movement to driveline center.

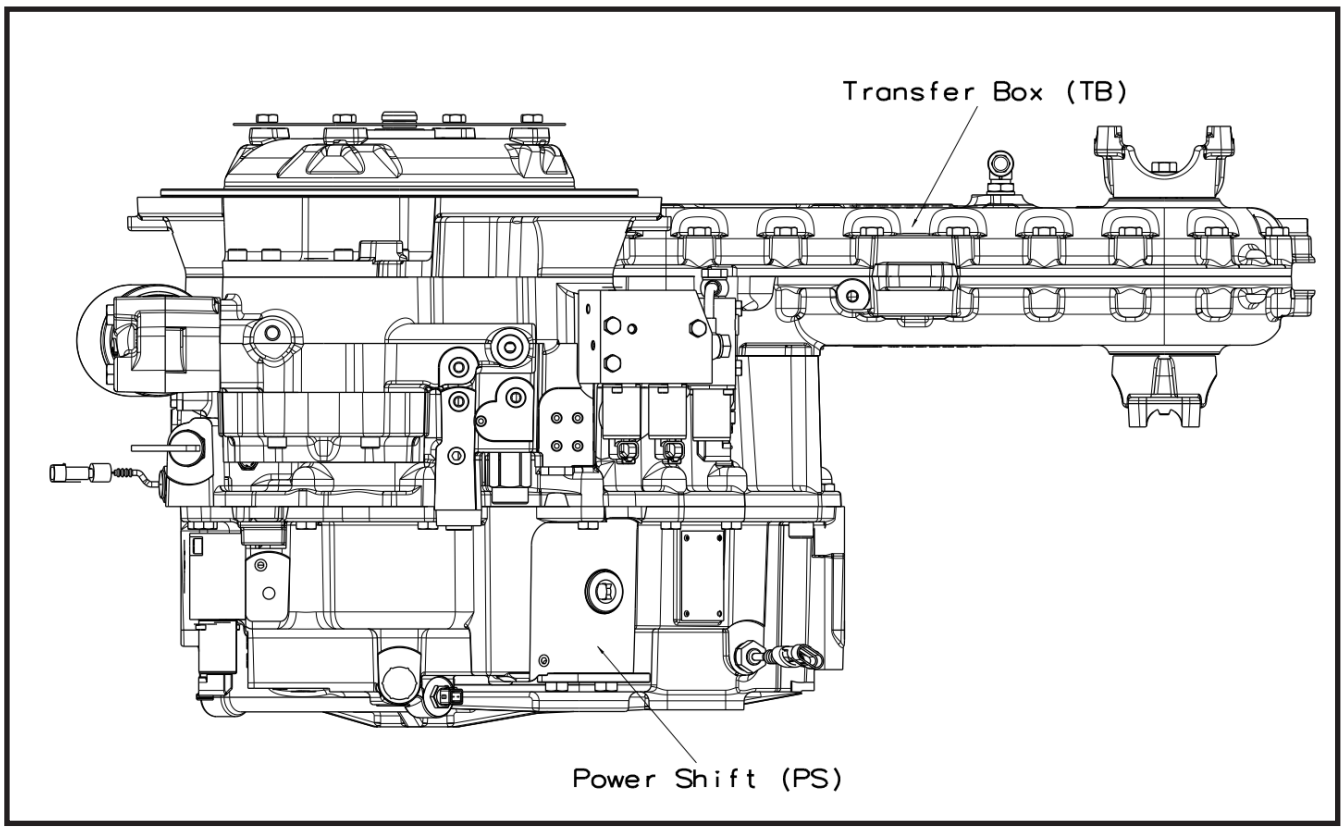

Both PS and TB modules must be filled with automatic transmission fluid for the following operations:

- Clutches actuation
- Torque Converter power transmission
- Gears and bearings lubrication
- Clutches cooling

Respect the following maintenance procedure in order to guarantee correct transmission functionality and performances.

Oil Specifications

Recommended oil

Carraro recommends the use of oil for transmissions Carraro Oil Power Life Lub™ Universal 80W This line of lubricants provides optimal lubrication for transmissions and offers the following advantages:

- **Guaranteed product quality**
  Because it is tested and approved by Carraro
- **Long life for your machine**
  Guaranteed by optimal lubrication of all transmission, clutch and brake units and high protection against wear.
- **High performance**
  Regardless of the oil temperature.
- **Extended maintenance intervals**
  Due to the optimal component formulation.

Powershift Transmission (PS) Maintenance Points

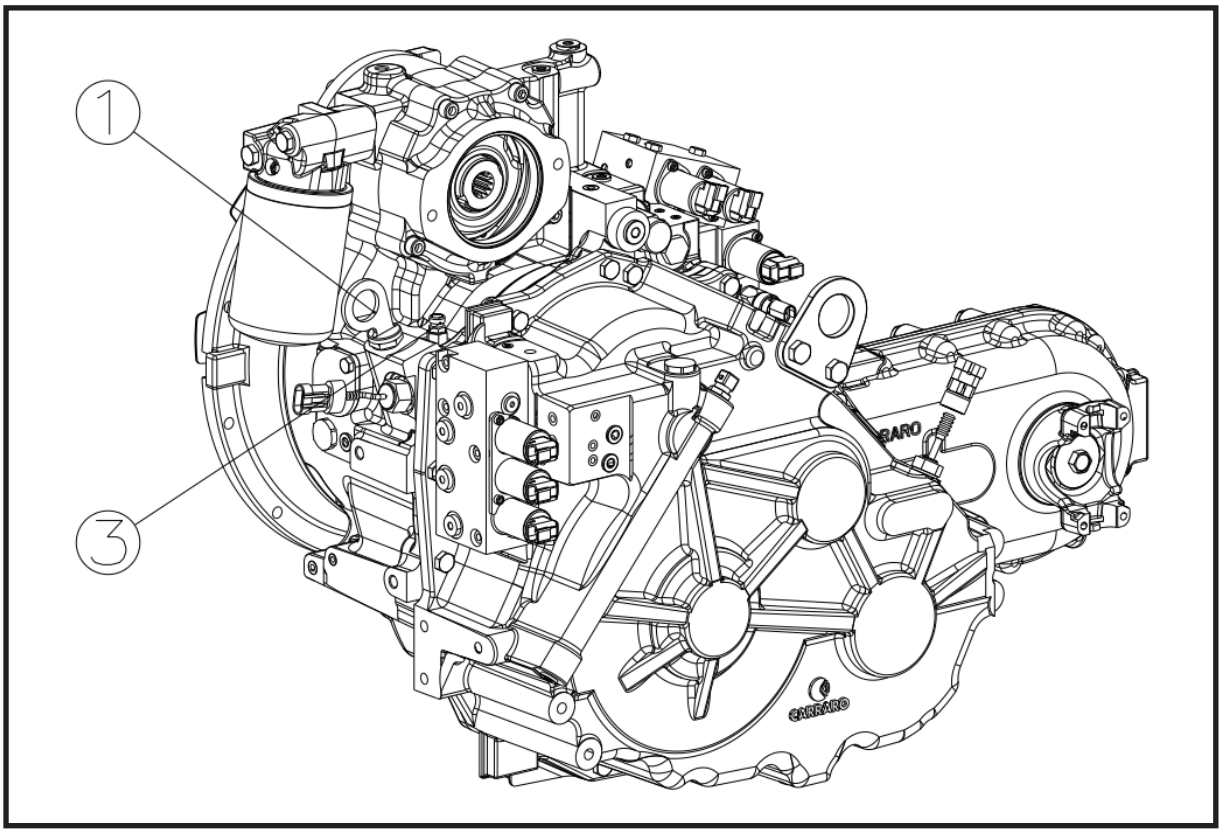

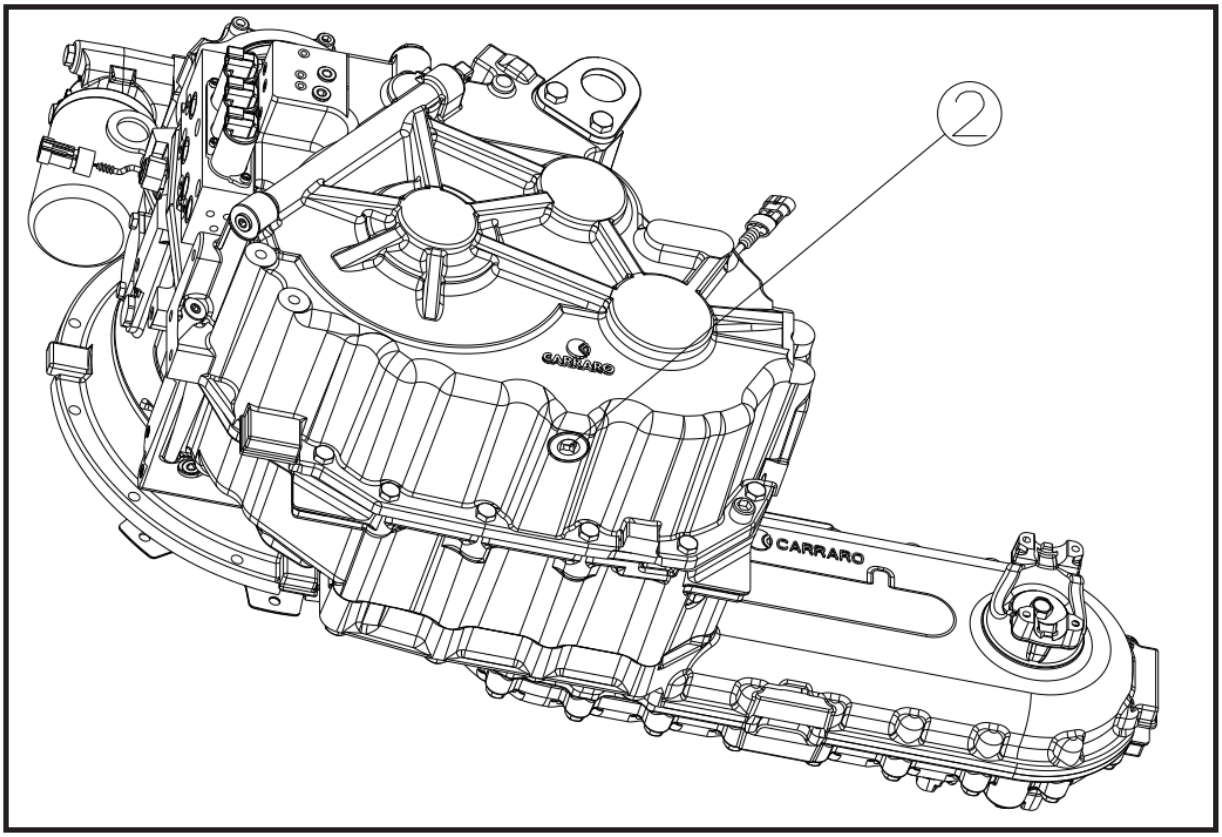

Number	Description
1	Oil inlet port/level dipstick
2	Oil outlet port/plug
3	Breather

Powershift (PS) Module Oil Filling

WARNING!

To drain and fill the oil and to check the oil level the transmission must be horizontal.

WARNING!

The vehicle must be locked in a safe position, the engine must be stopped and the transmission in neutral.

First Installation Filling

1. Fill the PS module with 5 gal. (20 liter) of prescribed oil, through the “Oil Inlet Port” (**1**).
2. Start the Engine and heat the oil up to 158-176 °F (70-80 °C) (temperature measured in the cooling system returning line to transmission)
3. Set the PS module in NEUTRAL position (NEUTRAL condition is intended when no Master clutch is engaged)
4. Set the engine at idle rpm.
5. Check that oil level stays within Min and Max limits marked in the level Dipstick (HOT range)
   • If the level is within the limits the transmission is operative.
   • If the level is under Min limit, add oil through the “Oil Inlet Port” (**1**) then replace the Dipstick and restart the procedure from point 2.
   • If the level is above Max limit, drain oil through the “Oil Outlet Port” (**2**) then assemble the removed plug at prescribed torque and restart the procedure from point 2.
6. When oil level is within the indicated range, stop the engine.

Powershift Oil Change

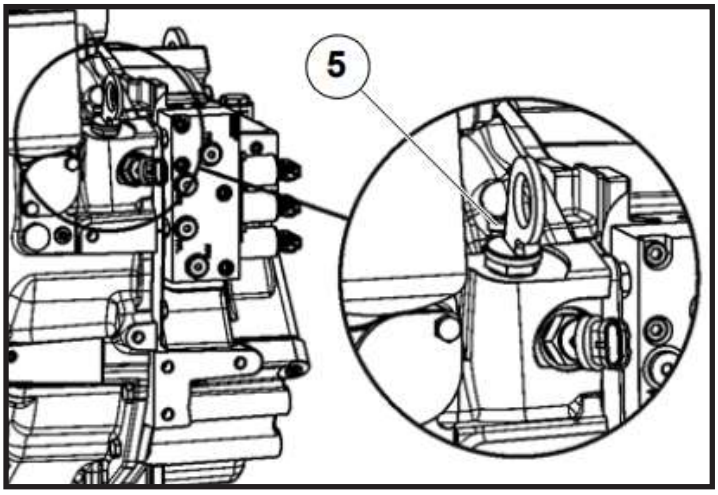

Clean with care the dipstick (**5**) and the surrounding area.

WARNING!

Risk of violent oil ejection, follow carefully all the safety procedures indicated in this manual and in the vehicle manual.

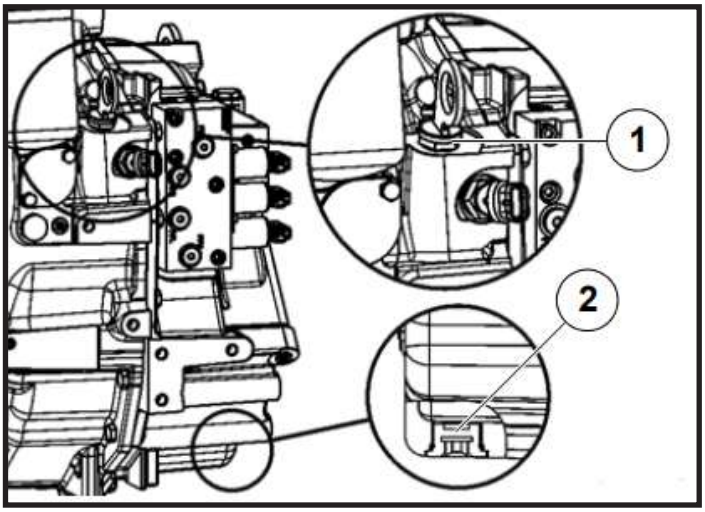

To drain the oil remove first the fill dipstick (**1**) then unscrew the drain plug (**2**). Drain all oil. Clean with care and assemble the plug (**2**).

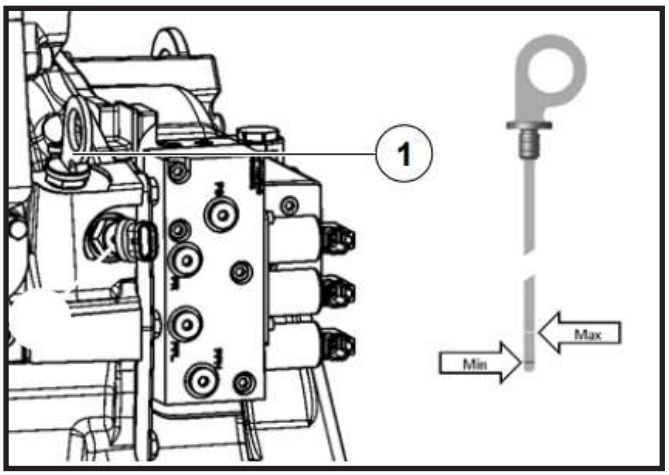

Fill to the reference (Min- Max) of the dipstick (**1**) with the specified oil.

Important: Comply with the HOT or COLD reference range depending on transmission oil temperature.

Wait to allow the oil to flow through the transmission. Check oil level and fill to the specified level if necessary. Clean with care and assemble the level dipstick (**1**).

Transfer Box TB427 Maintenance Points

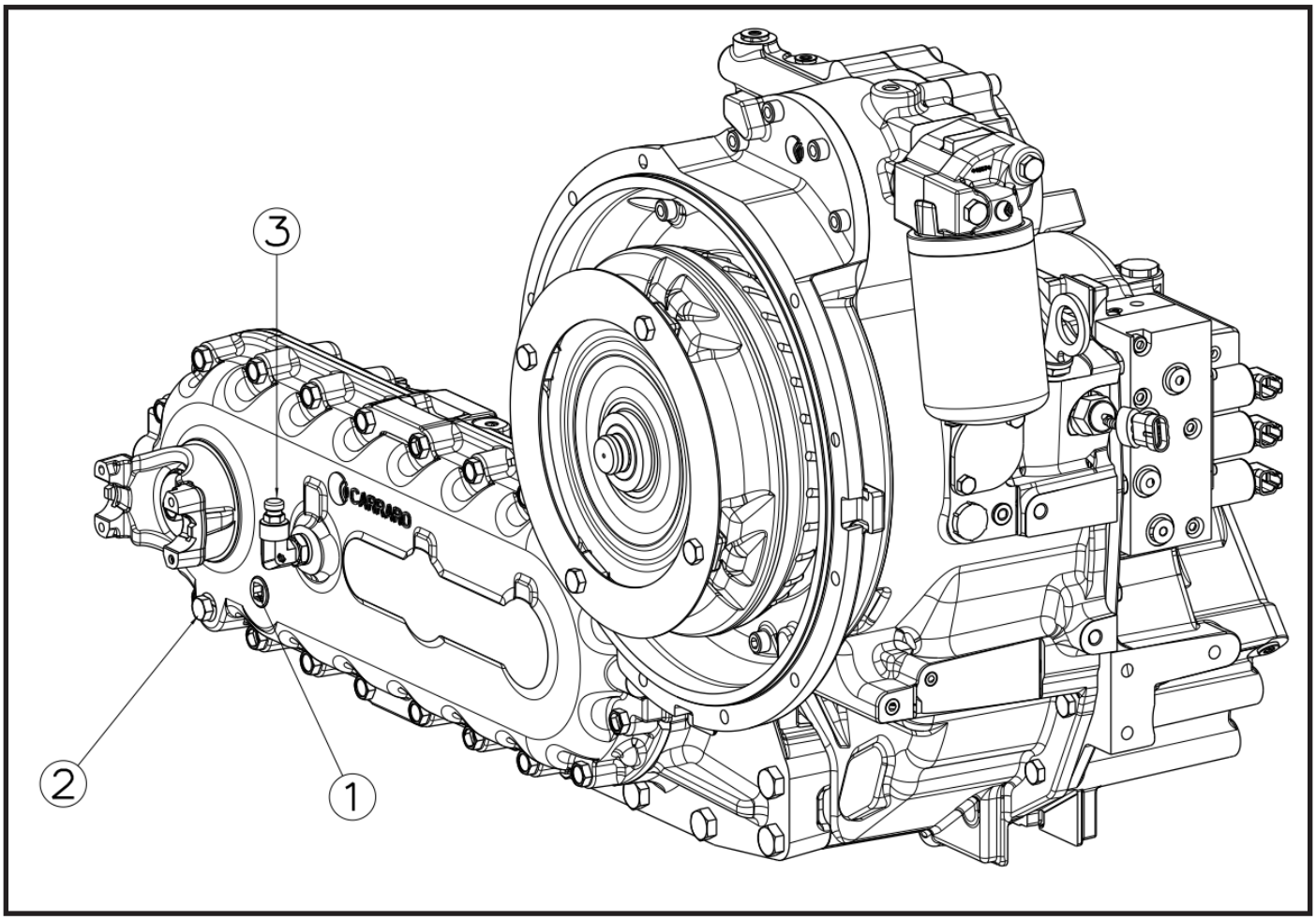

Number	Description
1	Oil inlet port/level dipstick
2	Oil outlet port/plug
3	Breather

Transfer Box (TB) Oil Filling

WARNING!

To drain and fill the oil and to check the oil level the transmission must be horizontal and installed on the vehicle.

WARNING!

The vehicle must be locked in a safe position, the engine must be stopped and the transmission in neutral.

First Installation Filling

Remove the inlet plug (**1**) and fill the Transfer Box module with specified transmission oil through the oil inlet port (**1**) until surplus oil exit from the same. Note: oil quantity is estimated **0,33 Gal. (1.75 liters)** (CASTROL TRANSMAX AGRI TRANS PLUS 80W, 17L TU, 15E740).

TB Oil Change

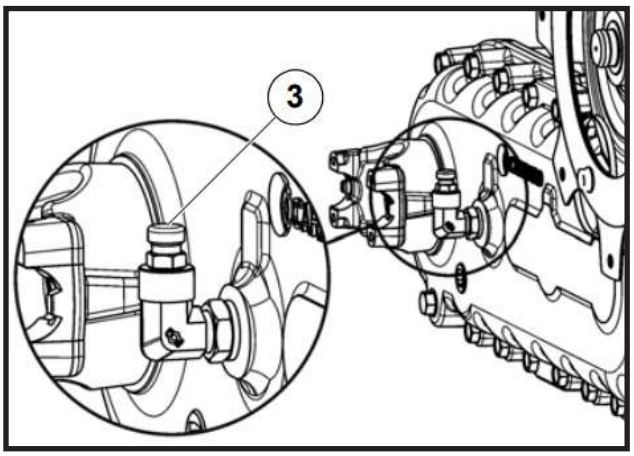

Clean with care the breather (**3**) and the surrounding area.

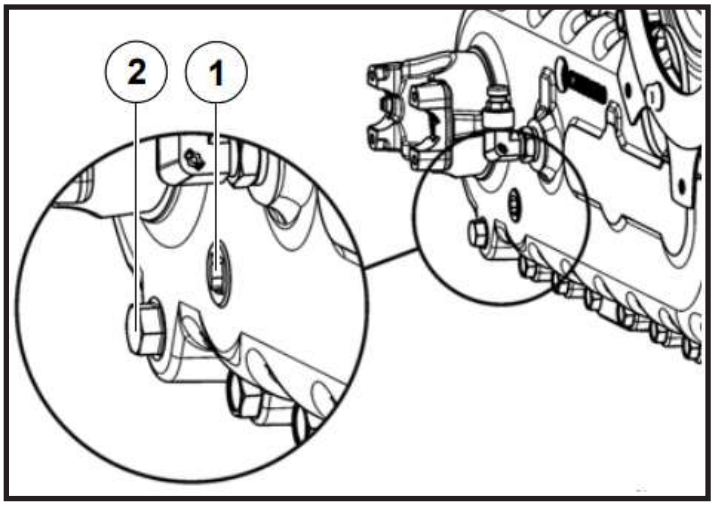

To drain the oil remove the inlet and level plug (**1**) and outlet plug (**2**).

See: the previous step.

Drain all oil.

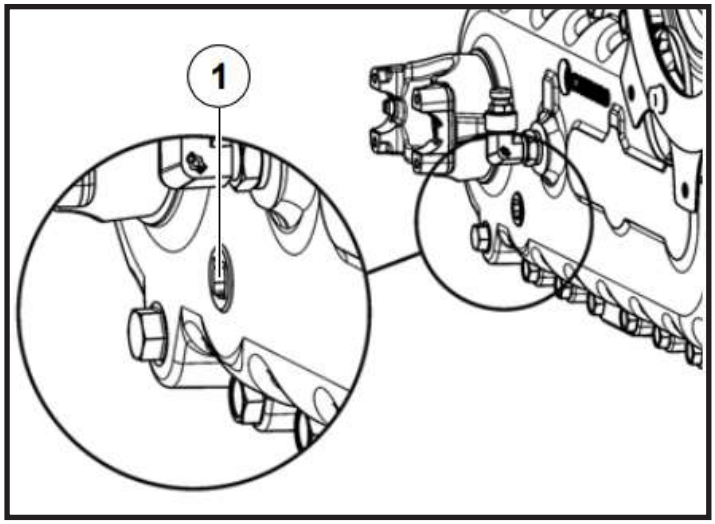

Fill to the bottom of the inlet and level port (1) with the recommended oil.

Wait to allow the oil to flow through the transmission.

Note: oil quantity is estimated **0,38 Gal (1.45 liters).**

Check oil level and fill to the specified level if necessary.

Grease in Assembly

IMPORTANT

Lubricate all brake pistons seals and O-rings with specific grease.

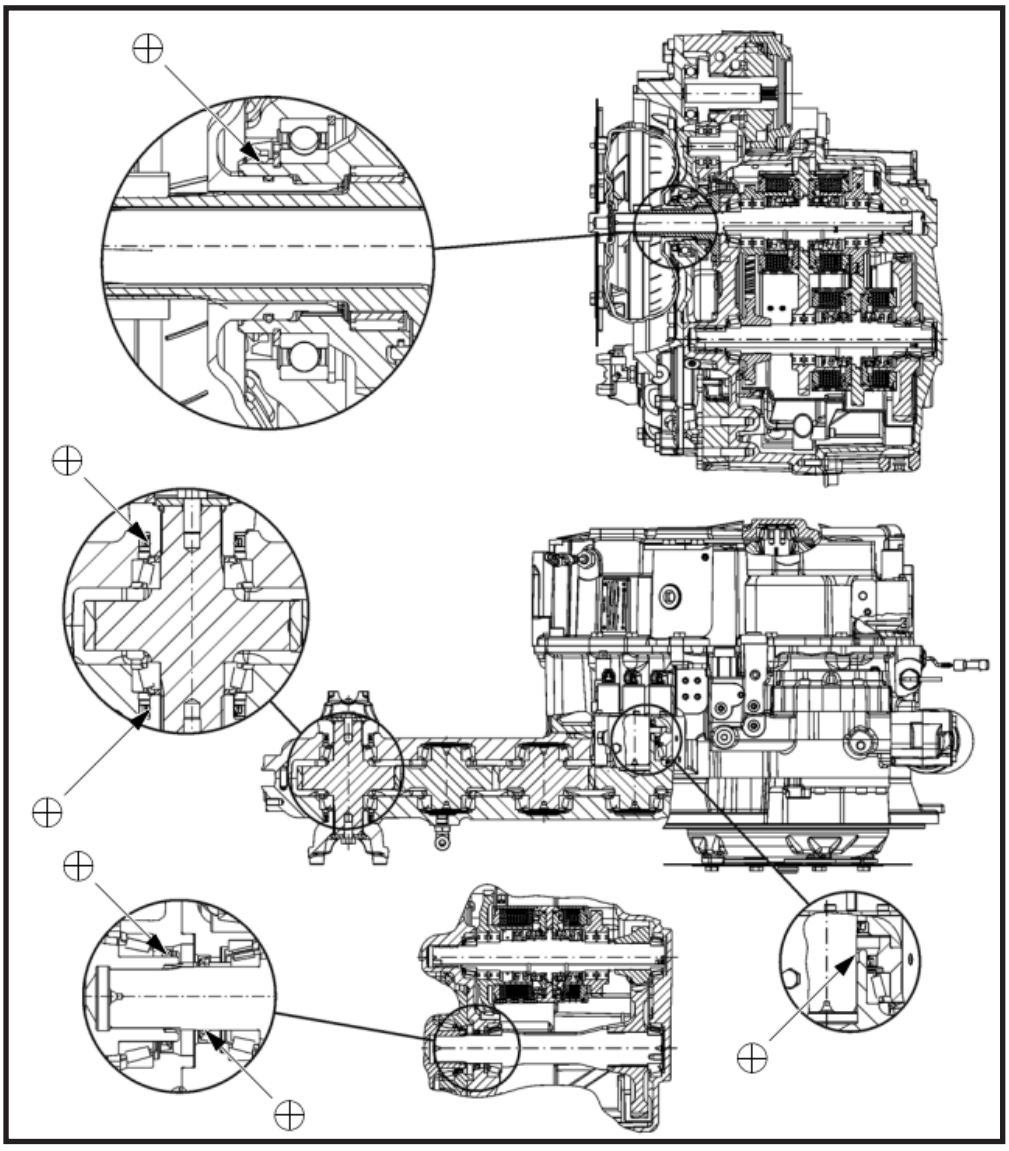

Apply on the indicated surfaces

3.6. Pins and Composite Bearing Repair Guidelines

Filament Wound Bearings

Pinned joints should be disassembled and inspected if the following occurs:

- Excessive sloppiness in joints.
- Noise originating from the joint during operation.

Filament wound bearings should be replaced if any of the following is observed:

- Frayed or separated fibers on the liner surface.
- Cracked or damaged liner backing.
- Bearings that have moved or spun in their housing.
- Debris embedded in liner surface.

Pins should be replaced if any of the following is observed (pin should be properly cleaned prior to inspection):

- Detectable wear in the bearing area.
- Flaking, pealing, scoring, or scratches on the pin surface.
- Rusting of the pin in the bearing area.

Re-assembly of pinned joints using filament wound bearings:

- Housing should be blown out to remove all dirt and debris. Bearings and bearing housings must be free of all contamination.
- Bearing/pins should be cleaned with a solvent to remove all grease and oil. Filament wound bearing are a dry joint and should not be lubricated unless otherwise instructed (i.e. sheave pins).
- Pins should be inspected to ensure it is free of burrs, nicks, and scratches which would damage the bearing during installation and operation.

Tire Replacement

It is recommended that a replacement tire to be the same size, ply and brand as originally installed. If not using an approved replacement tire, It is recommended that replacement tires have the following characteristics:

- Equal or greater ply/load rating and size of original.
- Tire tread contact width equal or greater than original.
- Wheel diameter, width and offset dimensions equal to the original.
- Approved for the application by the tire manufacturer (including inflation pressure and maximum tire load).

The rims installed have been designed for stability requirements which consist of track width, tire pressure and load capacity. Size changes such as rim width, center piece location, larger or smaller diameter, etc. without written factory recommendations, may result in unsafe condition regarding stability.

Foam filled tires have a positive effect on the weight, stability and handling characteristics of the machine, especially under load. The use of hydrofill as a tire-fill substance is not recommended because of possible environmental impact.

Tire Damage

For pneumatic tires, AXCS recommends that when any cut, rip, or tear is discovered that exposes sidewall or tread area cords in the tire, measures must be taken to remove the tire from service immediately. Arrangements must be made for replacement of the tire or tire assembly.

3.8.Hydraulic Filter Replacement

Hydraulic Filter Removal

1. Park the machine on a firm, level surface, level the machine, fully retract the boom, lower the boom, place the transmission in (N) NEUTRAL, engage the park brake and shut the engine OFF.
2. Place a Do Not Operate Tag on both the ignition key switch and the steering wheel.
3. Open the tank filler cap (**1**)

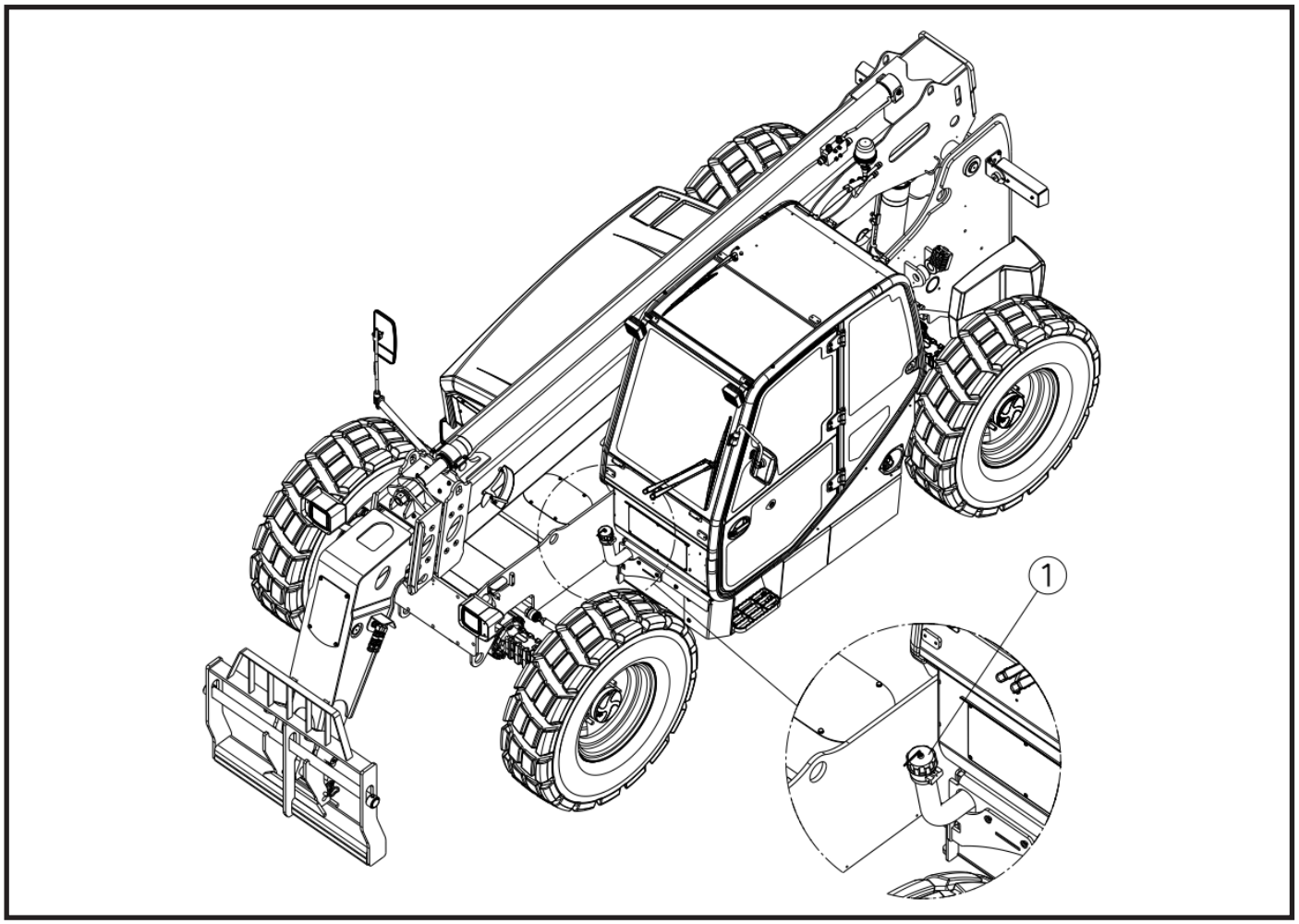

4. Allow the system fluids to cool.
5. Properly disconnect the battery. *Refer to Section — Battery*, for procedure.
6. Place a suitable receptacle under Hydraulic Tank. Drain the hydraulic fluid by removing the plug at the bottom of the tank.
7. Remove the lower cover plate (**2**).

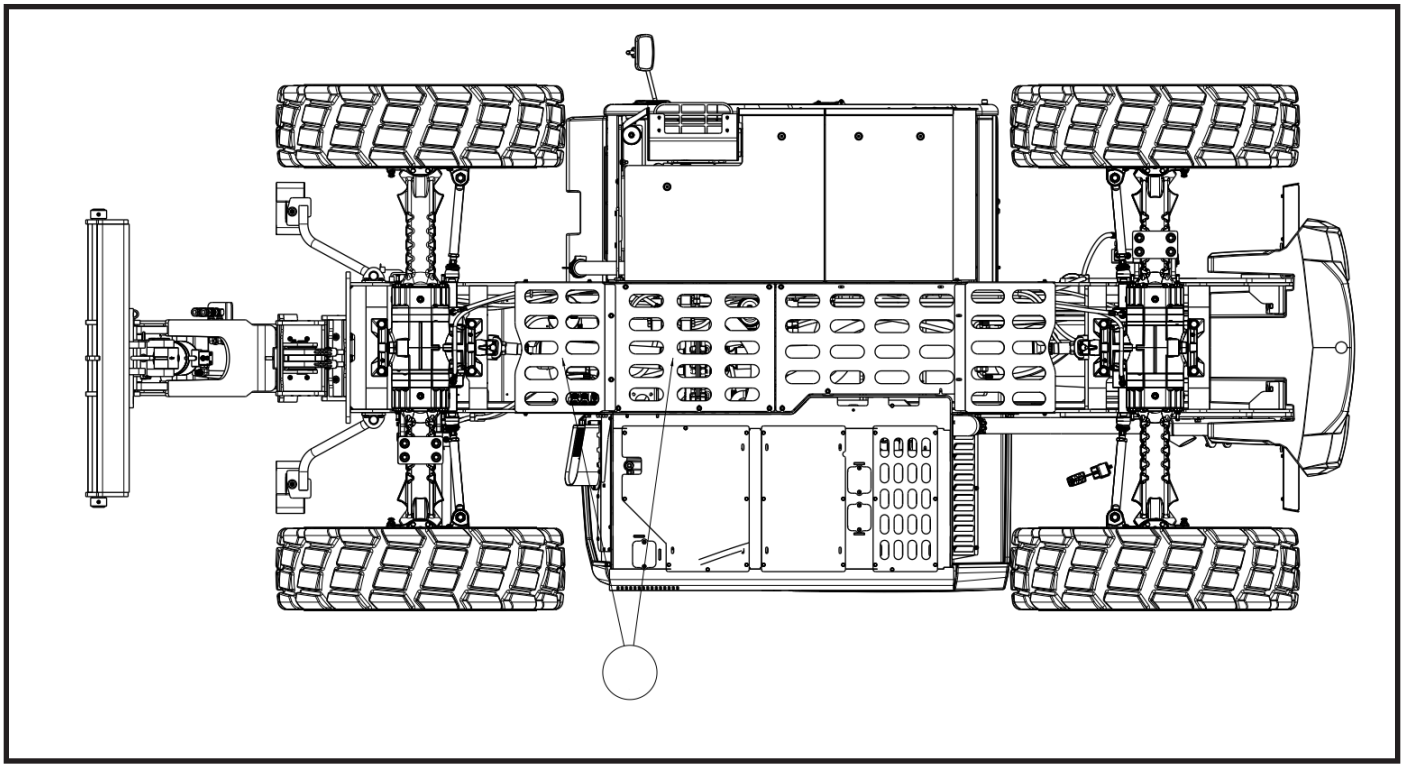

8. Remove the Service Pump Suction Line (**2**).

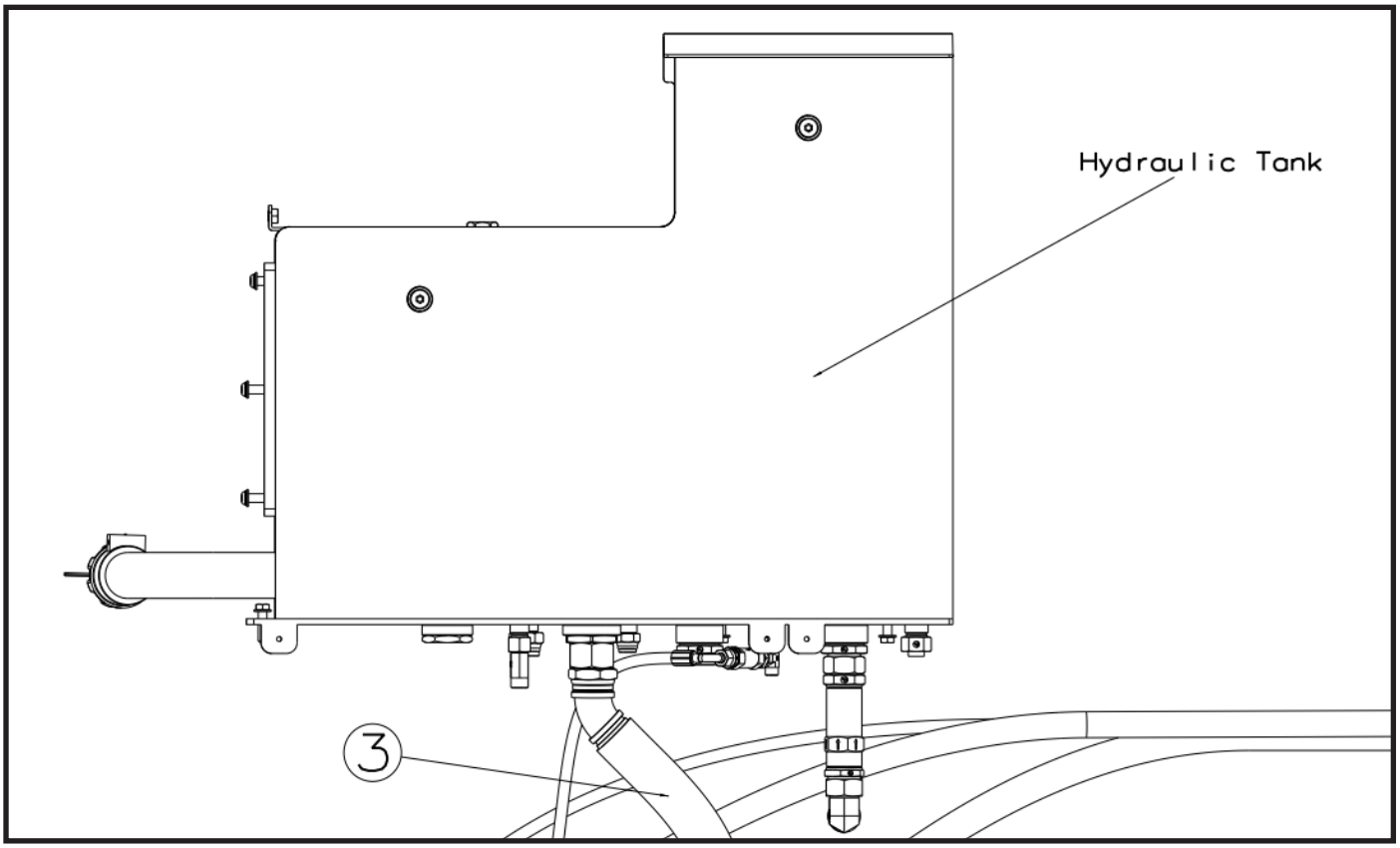

9. Remove the Hydraulic Filter (**3**).

Installation

1. Remove cover from hydrolic tank filter opening and install filter. Verify filter is seated in reservoir.
2. Install hydraulic filter cap and tighten by hand.
3. Properly connect the battery. *Refer to Section — Battery*, for procedure.
4. Close and secure the engine cover.
5. Start machine and check all hydraulic functions for proper operation. Check for any hydraulic oil leaks. Shut machine OFF and check hydraulic oil level. If oil is warm, oil level should be visible in the gauge window. Add hydraulic oil if necessary. *Refer to Section — Fluid and Lubricant Capacities*.
6. Close and secure the lower cover plate (**1**).
7. Remove the Do Not Operate Tag from the ignition key switch and the steering wheel.

3.9.Hidden Screen

REVO TFT Dashboard Screens & Features

Access The Hidden Screen

To Access the secret screen, you need to press and hold buttons 1 and 2 at te same time for 5 seconds.

Hidden Screen 1 Configuration

Maintenance Reset

If you hold the enter button for 5 seconds, you reset the maintenances times.

Rear View Camera

Rear camera is an option, you can open/close after than assembling/disassembling. To activate the rear camera, open the hidden screen and select the rear view camera option.

Overspeed Warning

When you do overspeed (higher than 25 mph), buzzer is active and mph showing in red.

Hidden Screen 2 Configuration

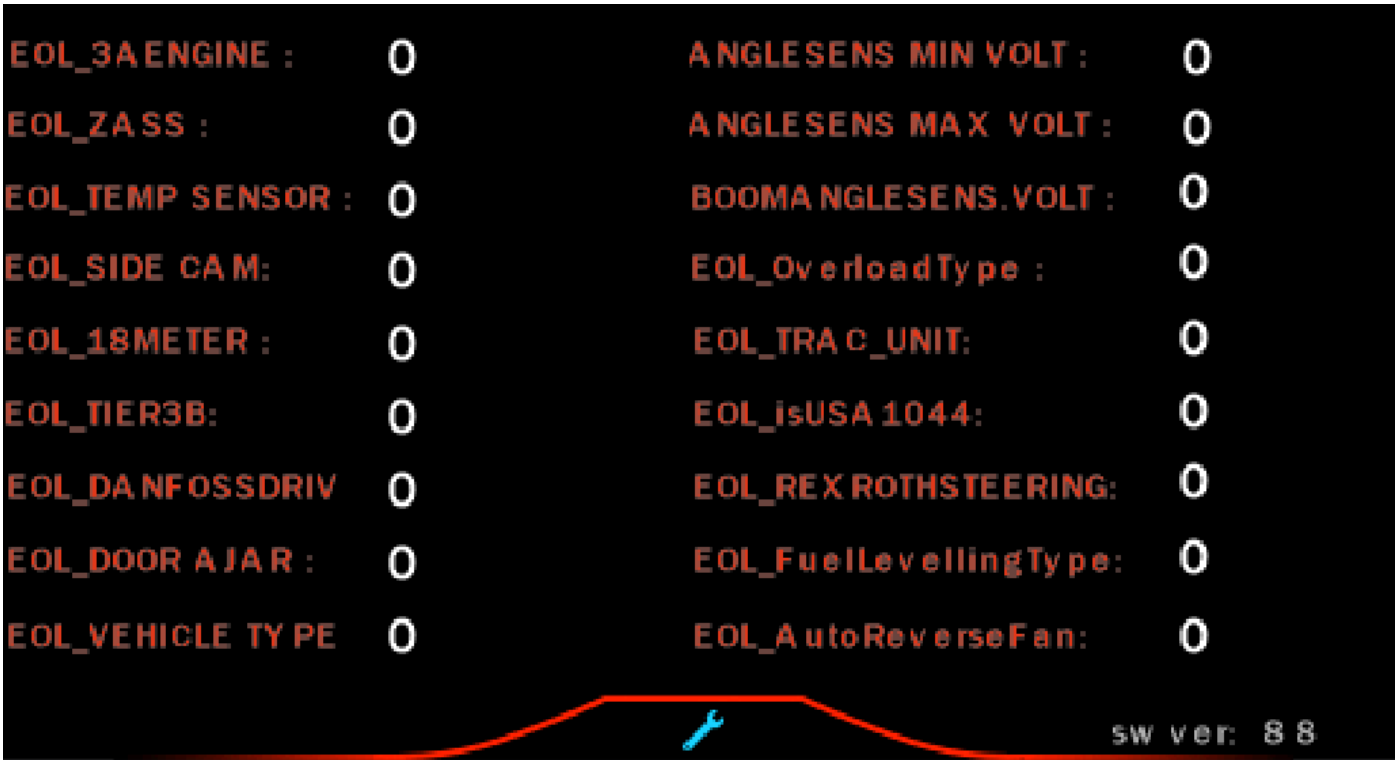

1- If the machine has Stage V, this option will be 0.
2- If the machine is US TLH, it is will be 0.
3- If the machine is equipped with an outside heat sensor, this will be option 1.
4- If the car has a side camera, this option 1 will.
5- If the machine is US TLH, it is will be 0.
6- If the machines engine is tier 3b, this option will be 1.
7- If the vehicle has danfossdrive capability, this option will be 1.
8- If the machine is US TLH, it is will be 0.
9- Our vehicle type option allows us to separate vehicles. It can take values between 0-6. US TLH is 2.

Hidden Screen 2 Configuration

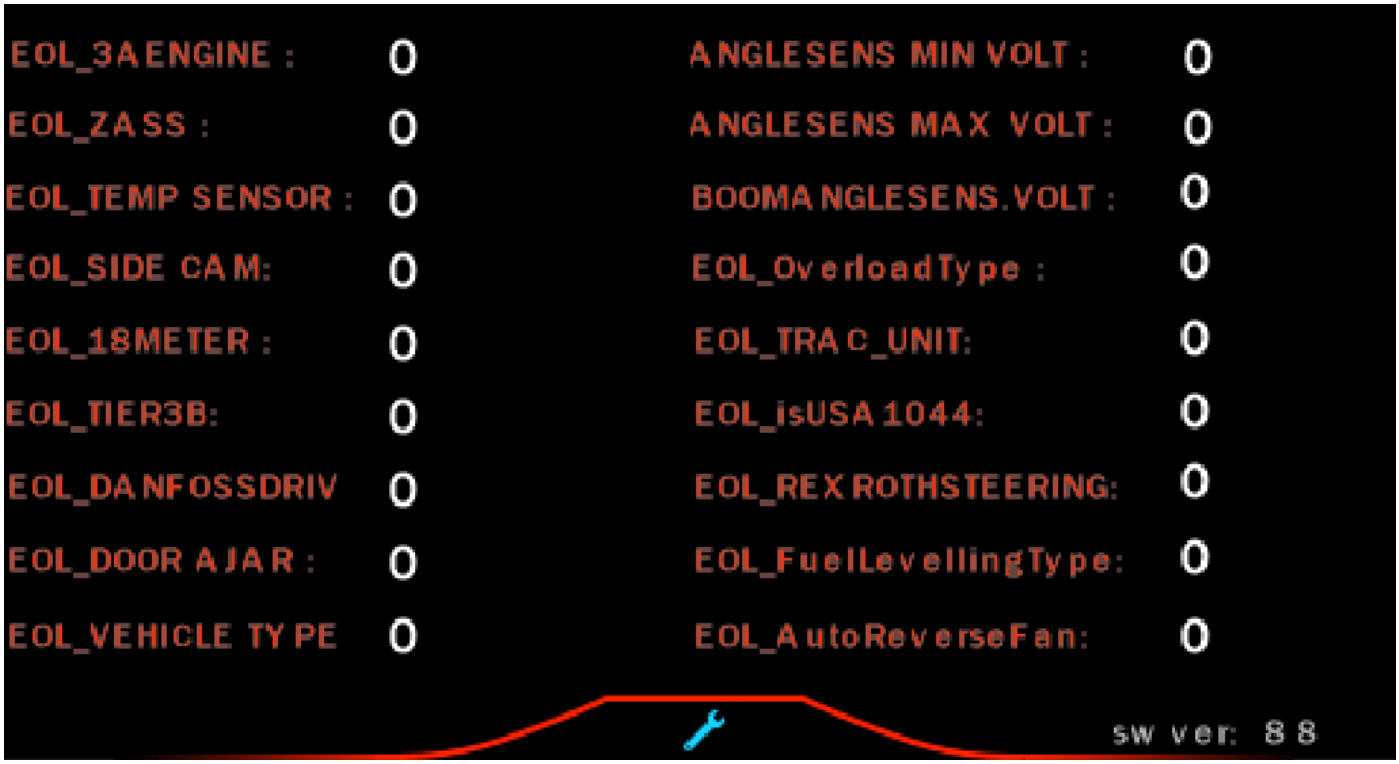

10, 11, 12 work together. The 12 value changes automatically as the boom angle changes. The boom is brought to the minimum level and the value written in 12 is written to 10. the boom is brought to the maximum level and the value written in 12 is written to 11.

13- If there is no overload in the system, set this value to 0, if there is and road brand set to 1, if there is and linkas brand set to 2.
14- If the machine has Track Unit, this option will be 1
15- If the machine is US TLH, it is will be 1.
16- If the machine has rexroth hydrostatic pump, it is will be 0.
17- If the machine is US TLH, it is will be 0.
18- If the machine is reverse fan, it is will be 1.
19- Software Version information.

4. TEST & ADJUSTMENT

4.1.Limit Values for Temperature and Pressure

The diverse engine components are usually suitable for minus operating temperatures of -22 °F (–30 °C), and storage temperatures of -40 °F (-40 °C).

Engine Cooling System

The following limit values apply for the temperatures and pressures of the engine cooling system.

Temperature in the Engine Cooling System

Component / Medium	Measuring Site	Max. perm. temp. / °C	Remark
Cooling Air Before charge air cooler	Before charge air cooler	Ambient temp. +5	For suction fan
Cooling Air	Between fan and engine in fan range	Ambient temp. +15	For suction fan
Coolant	Before engine inlet	230 °F (110 °C)	

Pressures in the Engine Cooling System

Component / Medium	Measuring Site	Limit Value	Remark
Coolant	Before inlet into water pump	Min. 4.3 psi (0,3 bar) over pressure	At 203 °F (95 °C) coolant temperature and min. coolant level in compensation tank, measurement with openly blocked thermostats. CE, RPP
Coolant	Behind engine outlet	25-27 kPa @55kW 21-27 kPa @74.4kW 21-27 kPa @80kW 21-27 kPa @90kW 21-27 kPa @1000kW	System resistance derived from difference p1 – p2 (see Fig. 11-7) CE, RPP

Temperatures in the Combustion Air System

Component / Medium	Measuring Site	Max. perm. temp. / °C	Remark
Combustion Air	Before turbocharger inlet	Ambient temp. +10	
Charge Air	At engine inlet	122°F (50 °C)	For rated load, rated speed and max. torque, in relation to 77°F (25°C) ambient temperature VE

Pressures in the Combustion Air System

Component / Medium	Measuring Site	Limit Value	Remark
Combustion air negative pressure	Before TC Inlet	0.22-0.44 psi (15 mbar-30 mbar)	When filter cartridge is new
Charge air	Behind turbocharger	300 kPa	Measurement always at engine full load VE
Charge air	Before engine inlet	6-11 kPa	Measurement always at engine full load VE

Fuel System

The following limit values apply for the temperatures and pressures of the fuel system. In the event of a fault in the fuel system, the maximum fuel temperature in the return can be reached short term. The inlet range into the fuel tank must also bear this temperature. The fuel temperature in the supply line may not exceed 194 °F (90 °C).

Temperatures in the Fuel System

Component / Medium	Measuring Site	Max. perm. temp.	Max. shortterm temp.
Fuel	In tank	176 °F (80 °C)	194 °F (90 °C)
Fuel	Before supply pump	176 °F (80 °C)	194 °F (90 °C)
Fuel	In return		266 °F (130 °C) **
Fuel	Lines	-40/212 °F (-40/100 °C)	266 °F (130 °C)
Fuel pressure sensor		284 °F (140 °C)	
Fuel supply pump	Environment	248 °F (120 °C)	284 °F (140 °C)
Fuel main filter	Environment	212 °F (100 °C)	248 °F (120 °C)
Fuel pre-filter (DEUTZ)	Environment	212 °F (100 °C)	
Fuel measuring unit ambient temperature		248 °F (120 °C)	284 °F (140 °C) without engine operation
Rail, pressure sensor		266 °F (130 °C)	
Rail, injection system	Environment	248 °F (120 °C)	284 °F (140 °C)

Pressures in the Fuel System

Component / Medium	Measuring Site	Limit Value	Remark
Fuel	Upstream inlet of supply pump	2.9 psi (0,2 bar) rel. to 1.45 psi (0.1 bar) rel.	Measuring at high idle speed and clean filters CE, RPP
Fuel	Return line	8.7 psi (0,6 bar) abs. to 26.1 psi (1,8 bar) abs.	Measuring at low idle speed and clean filters CE, RPP

Engine Components

The following limit values apply for the temperatures of the engine components.

Component / Medium	Measuring Site	Max. perm. temp.	Max. shortterm temp.*
Alternator	Cooling air	230 °F (110 °C)	266 °F (130 °C)
Cable to sensors		248 °F (120 °C)	
Cable harness corrugated tube		275 °F (135 °C)	
Camshaft speed sensor		266 °F (130 °C)	
Charge pressure / temperature sensor		266 °F (130 °C)	
Compressor (water cooled)	Environment	185 °F (85 °C)	203 °F (95 °C)
Connector, central connector, cable harness		266 °F (130 °C)	
Coolant sensor		266 °F (130 °C)	
Crankcase venting valve	Environment	275 °F (135 °C)	
Crankshaft speed sensor		266 °F (130 °C)	
Engine control unit (ECU)		185 °F (85 °C)	
Lines		302 °F (150 °C)	
V-ribbed belt	Environment	248 °F (120 °C)	284 °F (140 °C)

Further Measured Values

The following limit values apply for the further measured values.

Temperatures of Further Measured Values

Component / Medium	Measuring Site	Max. perm. temp. / °F (°C)
Ambient temperature	Free environment (in shade)	
Battery	Environment	122…140 °F (50...60 °C)
Brake flap actuating cylinder	Environment	293 °F (145 °C)
Engine oil in sump		257 °F (125 °C)
Exhaust gas temperature	Behind exhaust turbocharger	
Ignition starter switch	Environment	194 °F (90 °C)
Oil pressure sensor		257 °F (125 °C)

Pressures of Further Measured Values

Component / Medium	Measuring Site	Limit Value	Remark
Exhaust gas back pressure	Behind exhaust turbocharger	≤29,4 kPa	Min. and Max. Values VE

4.2.Standart Specifications

Machine model				TH-842 (55kW)	
Classification	**Check Item**	**Test Conditions**	**Unit**	**Standard Value**	**Permissible Value**
Engine speed (load condition)	With stalled converter	• Max. engine speed • Hydraulic oil temperature: 113-131 °F (45–55 °C) • Converter oil temperature: 176 °F (80 °C) • Machine in 2nd gear • Service brakes: applied	rpm	1700	1700-1900
	With stalled converter and hydraulic system in load condition	• Max. engine speed • Hydraulic oil temperature: 113-131 °F (45–55 °C) • Converter oil temperature: 176°F (80°C) • Machine in 2nd gear • Service brakes: applied • Equipment crate curl at end of travel and steering at end of travel		1400	1400-1600
	With hydraulic system in load condition	• Max. engine speed • Hydraulic oil temperature: 113-131 °F (45–55 °C) • Converter oil temperature: 176°F (80 °C) • Parking brakes: applied • Equipment crate curl at end of travel and steering at end of travel		2100	2100-2300

Machine model				TH-1044 (75kW)	
Classification	**Check Item**	**Test Conditions**	**Unit**	**Standard Value**	**Permissible Value**
Engine speed (load condition)	With stalled converter	• Max. engine speed • Hydraulic oil temperature: 113-131 °F (45–55 °C) • Converter oil temperature: 176°F (80 °C) • Machine in 2nd gear • Service brakes: applied	rpm	2050	2050-2150
	With stalled converter and hydraulic system in load condition	• Max. engine speed • Hydraulic oil temperature: 113-131 °F (45–55 °C) • Converter oil temperature: 176 °F (80 °C) • Machine in 2nd gear • Service brakes: applied • Equipment crate curl at end of travel and steering at end of travel		1650	1650-1750
	With hydraulic system in load condition	• Max. engine speed • Hydraulic oil temperature: 113-131 °F (45–55 °C) • Converter oil temperature: 176 °F (80 °C) • Parking brakes: applied • Equipment crate curl at end of travel and steering at end of travel		2300	2300-2350

Machine model				TH-1044 (80kW)	
Classification	**Check Item**	**Test Conditions**	**Unit**	**Standard Value**	**Permissible Value**
Engine speed (load condition)	With stalled converter	• Max. engine speed • Hydraulic oil temperature: 113-131 °F (45–55 °C) • Converter oil temperature: 176 °F (80 °C) • Machine in 2nd gear • Service brakes: applied	rpm	2100	2100-2200
	With stalled converter and hydraulic system in load condition	• Max. engine speed • Hydraulic oil temperature: 113-131 °F (45–55 °C) • Converter oil temperature: 176°F (80°C) • Machine in 2nd gear • Service brakes: applied • Equipment crate curl at end of travel and steering at end of travel		1700	1700-1800
	With hydraulic system in load condition	• Max. engine speed • Hydraulic oil temperature: 113-131°F (45–55 °C) • Converter oil temperature: 176°F (80°C) • Parking brakes: applied • Equipment crate curl at end of travel and steering at end of travel		2300	2300-2350

Machine model				TH-1044 (90kW)	
Classification	**Check Item**	**Test Conditions**	**Unit**	**Standard Value**	**Permissible Value**
Engine speed (load condition)	With stalled converter	• Max. engine speed • Hydraulic oil temperature: 113-131 °F (45–55 °C) • Converter oil temperature: 176 °F (80 °C) • Machine in 2nd gear • Service brakes: applied	rpm	2200	2200-2300
	With stalled converter and hydraulic system in load condition	• Max. engine speed • Hydraulic oil temperature: 113-131 °F (45–55 °C) • Converter oil temperature: 176 °F (80 °C) • Machine in 2nd gear • Service brakes: applied • Equipment crate curl at end of travel and steering at end of travel		1800	1800-1900
	With hydraulic system in load condition	• Max. engine speed • Hydraulic oil temperature: 113-131 °F (45–55 °C) • Converter oil temperature: 176 °F (80 °C) • Parking brakes: applied • Equipment crate curl at end of travel and steering at end of travel		2300	2300-2350

Engine				842/944/1044	
Classification	**Check Item**	**Test Conditions**	**Unit**	**Standard Value**	**Permissible Value**
Engine speed (load condition)	With stalled converter	• Max. engine speed • Hydraulic oil temperature: 113-131 °F (45–55 °C) • Converter oil temperature: 176°F (80°C) • Machine in 2nd gear • Service brakes: applied	rpm	2200	2200-2300
	With stalled converter and hydraulic system in load condition	• Max. engine speed • Hydraulic oil temperature: 113-131°F (45–55 °C) • Converter oil temperature: 176°F (80°C) • Machine in 2nd gear • Service brakes: applied • Equipment crate curl at end of travel and steering at end of travel		1800	1800-1900
	With hydraulic system in load condition	• Max. engine speed • Hydraulic oil temperature: 113-131°F (45–55°C) • Converter oil temperature: 176°F (80°C) • Parking brakes: applied • Equipment crate curl at end of travel and steering at end of travel		2300	2300-2350

					1044(75 kW/100 kW
Classification	**Check Item**	**Test Conditions**	**Unit**	**Standard Value**	**Permissible Value**
Circuit pressure	General (cut-off) valve	• Engine speed: min. • Hydraulic oil temperature: 113-131 °F (45–55 °C) • Check one circuit at a time	(bar) psi	(266.6 bar) 3867 psi	(266±7 bar) 3867±100 psi
	LS differential pressure (unloading valve)	• Engine speed: max • Hydraulic oil temperature: 113-131 °F (45–55 °C)		(35.1 bar) 509 psi	(35.1±1 bar) 509±15 psi
	Steering	• Engine speed: 1500 rpm • Hydraulic oil temperature: 113-131 °F (45–55 °C)		(205.4 bar) (368 psi)	(205±5 bar) 368±73 psi
Secondary valve pressure	Boom (up)	• Engine speed: min. • Hydraulic oil temperature: 113-131 °F (45–55 °C) • General valve calibration: 4206 psi (290 bar). • Check one circuit at a time	(bar) psi	(261.7 bar) 3796 psi	(261+5 bar) 3796±73 psi
	Boom (extension)			(234.1 bar) 3395 psi	(234+5 bar) 3395±73 psi
	Equipment control (curl)	• Engine speed: min. • Hydraulic oil temperature: 113-131 °F (45–55 °C) • General valve calibration: 3771±102 psi (260±7 bar).		(249.2 bar) 3614 psi	(249+5 bar) 3614±73 psi

Engine					842	
Classification	**Check Item**	**Test Conditions**		**Unit**	**Standard Value**	**Permissible Value**
Work equipment speed	Boom up (from ground to max. height)	• Check position: See Fig. A in this chapter. • Engine speed: MAX. • Hydraulic oil temperature: 113-131°F (45–55 °C) • Perform 3 tests and calculate the average	Up	Sec.	8.66	8.66±1
	Boom down (from ground to max. height)		Down		10.12	10-12
	Boom extension (full extension)	• Check position: See Fig. B in this chapter. • Engine speed: MAX. • Hydraulic oil temperature: 113-131°F (45–55 °C) • Perform 3 tests and calculate the average	Extension	Sec.	12.39	11-14
	Boom retraction (full retraction)		Retraction		11.94	10-13
	Equipment crate curl (from full dump to max. curl)	• Check position: See Fig. C in this chapter. • Engine speed: MAX. • Hydraulic oil temperature: 113-131°F (45–55 °C) • Perform 3 tests and calculate the average	Curl	Sec.	2.86	2-4
	Dump (from max. curl to full dump)		Dump		3.62	3-5

					1044 (75 kW/100 kW)
Classification	Check Item	**Test Conditions**		**Unit**	**Standard Value**
Work equipment speed	Boom up (from ground to max. height)	• Check position: See Fig. A in this chapter. • Engine speed: MAX. • Hydraulic oil temperature: 113-131°F (45–55 °C) • Perform 3 tests and calculate the average	Up	Sec.	9.48 @75kW 9.85 @100kW
	Boom down (from ground to max. height)		Down		8.89 @75kW 8.94 @100kW
	Boom extension (full extension)	• Check position: See Fig. B in this chapter. • Engine speed: MAX. • Hydraulic oil temperature: 113-131°F (45–55 °C) • Perform 3 tests and calculate the average	Extension	Sec.	17.44 @75kW 17.50 @100kW
	Boom retraction (full retraction)		Retraction		15.46 @75kW 15.61 @100kW
	Equipment crate curl (from full dump to max. curl)	• Check position: See Fig. C in this chapter. • Engine speed: MAX. • Hydraulic oil temperature: 113-131°F (45–55 °C) • Perform 3 tests and calculate the average	Curl	Sec.	3.51 @75kW 3.45 @100kW
	Dump (from max. curl to full dump)		Dump		4.19@75kW 4.52@100kW
	Stabilizers up (from fully extended to fully retracted)	• Check position: See Fig. D in this chapter. • Engine speed: MAX. • Hydraulic oil temperature: 113-131 °F (45–55 °C) • Test one stabilizer at a time • Perform 3 tests and calculate the average	Up	Sec.	1.94 @75kW 5.90@100kW
	Stabilizers down (from fully retracted to fully extended)		Down		1.09 @75kW 6.25@100kW

Machine Model						842
Classification	Check Item	Test Conditions		Unit		Standard Value
Translation speed	Translation speed (no load)	• Wheels lifted with stabilizers and/or jack stands: see Figures E and F in this chapter. • Check engine at MAX rpm • Transmission oil temperature at 140-158 °F (60-70 °C) • Measure propeller shaft speed in all gears.	FORWARD GEAR	mph	1st	4
					2nd	5
					3rd	9
					4th	20
			REVERSE GEAR		1st	4
					2nd	7
					3rd	13

Machine Model						1044
Classification	**Check Item**	**Test Conditions**		**Unit**		**Standard Value**
Translation speed	Translation speed (no load)	• Wheels lifted with stabilizers and/or jack stands: see Figures E and F in this chapter. • Check engine at MAX rpm • Transmission oil temperature at 140-158 °F (60-70 °C) • Measure propeller shaft speed in all gears.	FORWARD GEAR	mph	1st	4
					2nd	6
					3rd	12
					4th	23
			REVERSE GEAR		1st	4
					2nd	9
					3rd	17

Machine Model						1256 (80 kW)
Classification	Check Item	Test Conditions		Unit		Standard Value
Translation speed	Translation speed (no load)	• Wheels lifted with stabilizers and/or jack stands: see Figures E and F in this chapter. • Check engine at MAX rpm • Transmission oil temperature at 140-158 °F (60-70 °C) • Measure propeller shaft speed in all gears.	FORWARD GEAR	mph	1st	4
					2nd	6
					3rd	11
					4th	21
			REVERSE GEAR		1st	4
					2nd	8
					3rd	16

Fig. A

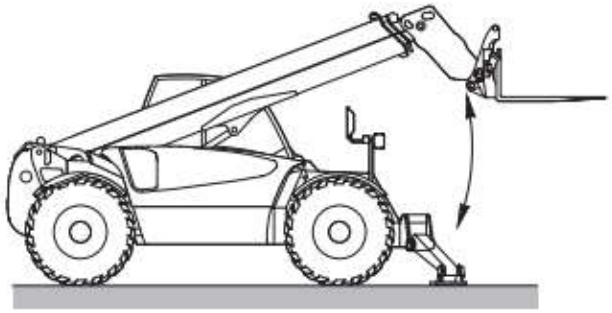

Fig. B

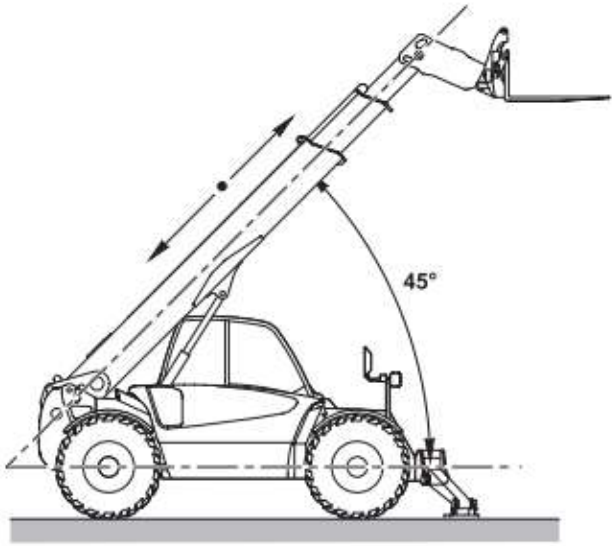

Fig. C

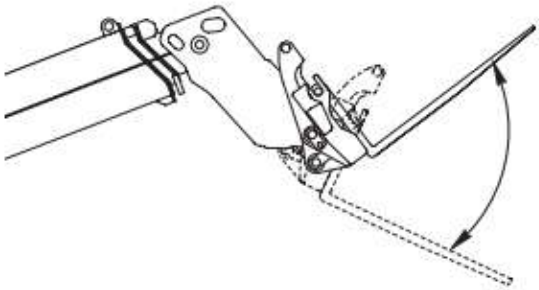

Fig. D

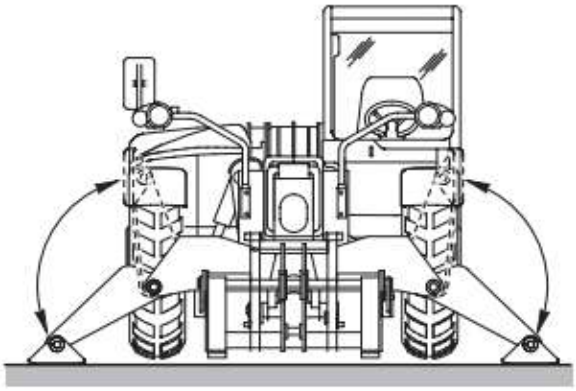

Fig. E

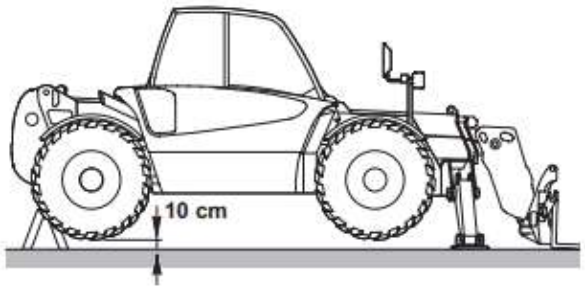

Fig. F

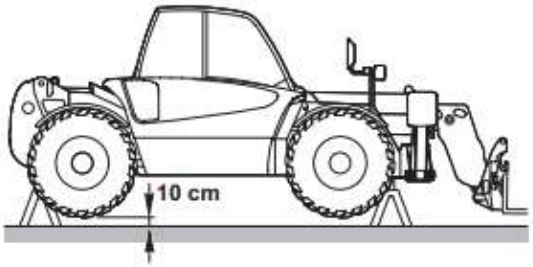

Fig. G

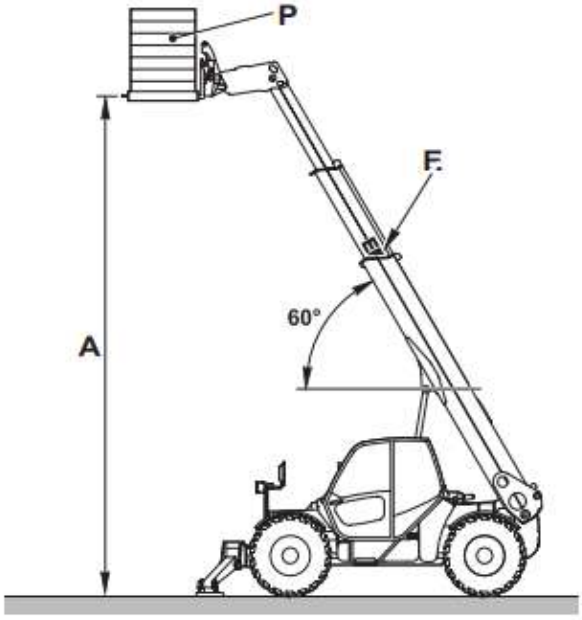

Fig. H

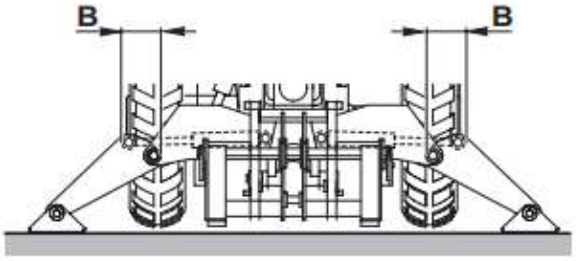

4.3.Testing Procedure

Starter

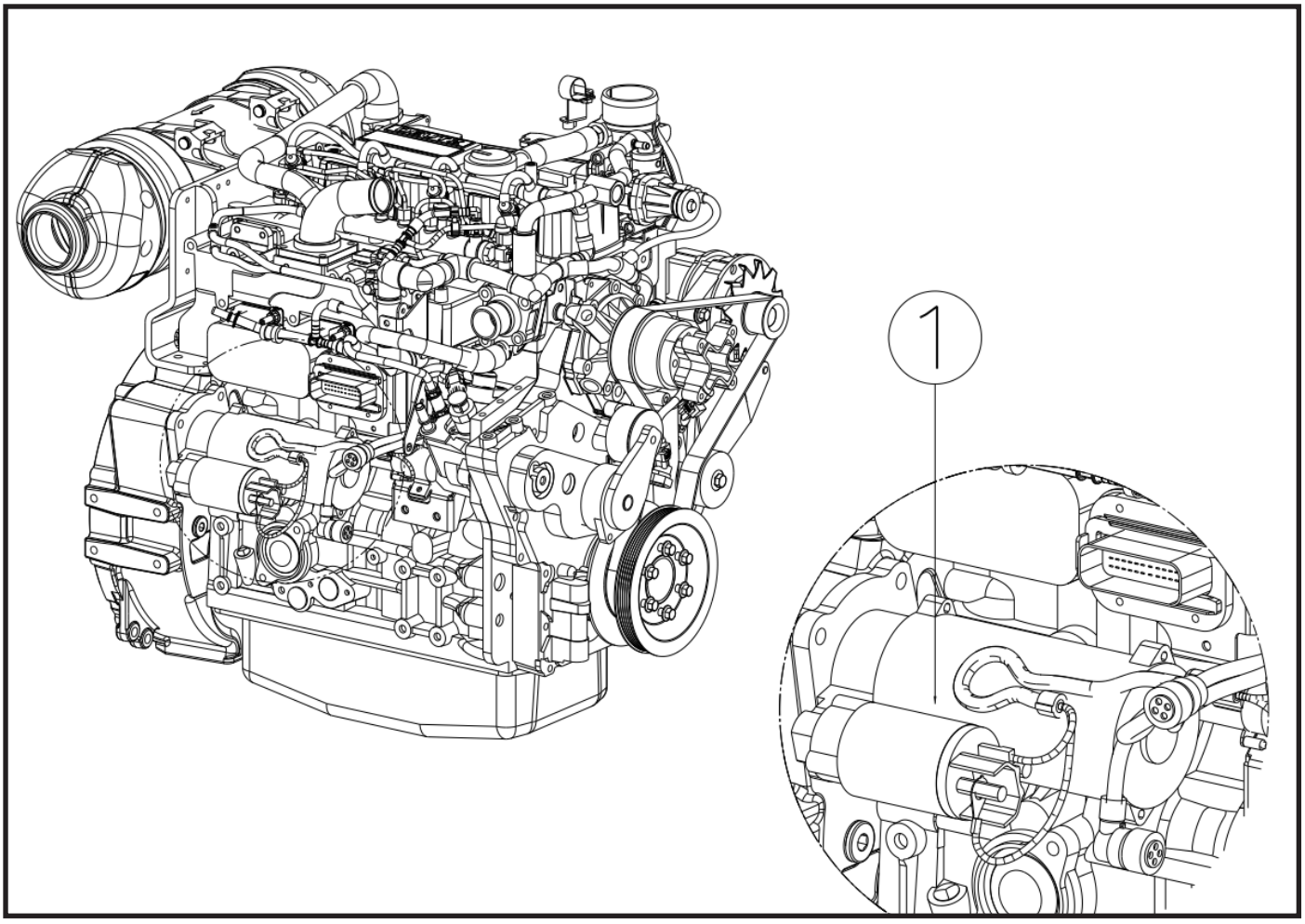

Testing Starter on Engine

If starter (**1**) does not engage when ignition key switch is turned, check following:

1. Main fuse may be blown, requiring replacement. Check for cause of blown fuse.
2. There may be a defect in ignition key switch, ignition wiring or starter solenoid.
3. Check battery condition. Clean battery posts and connectors at each end of battery cables.
4. Check for broken wiring and damaged insulation on wiring. Replace all broken or damaged wiring.
5. Check all connections at starter solenoid, key switch and wiring harness plugs. Clean and tighten all connections.
6. If starter still does not operate after these checks have been performed, check starting circuit.

Starter Circuit Checks

1. Check wires and connections for looseness, corrosion, damage, etc.
2. If a “whirring” noise is heard but engine does not turn over, starter is spinning but not engaging flywheel. The starter drive or solenoid that pushes drive forward to engage flywheel may be defective. Missing or damaged teeth on flywheel can also prevent starter from cranking engine.
3. If starter only “clicks” it may indicate that battery is discharged, or that there is a loose or corroded battery cable connection. Check battery state of charge and battery condition first, then check cables and cable connections.
4. For additional information on starting circuit, *Refer to Section — Schematics*.

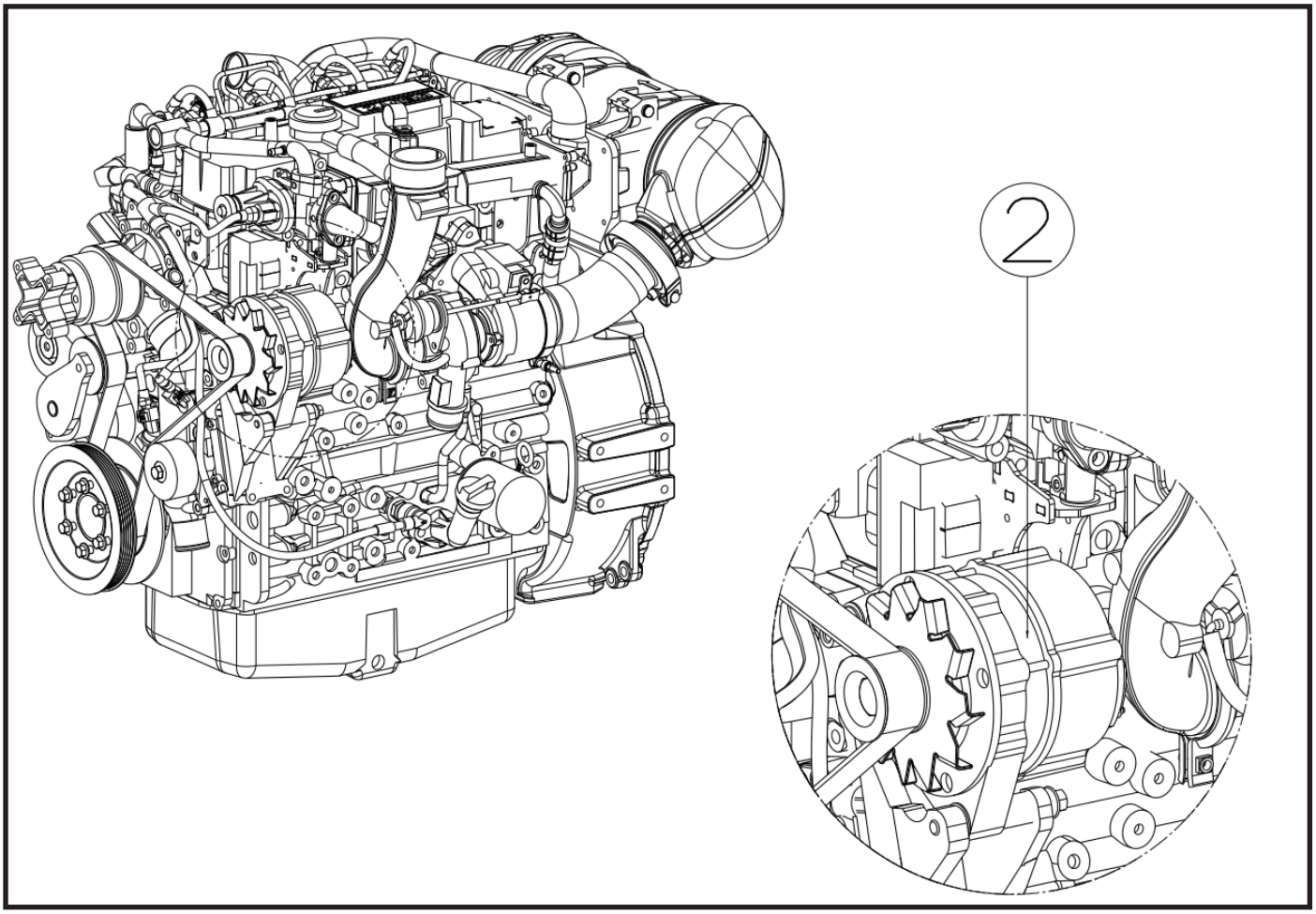

Before using a battery charger, an attempt can be made to recharge battery by jump-starting machine (refer to the appropriate Operation & Safety Manual). Allow engine to run, which will enable alternator (**2**) to charge the battery.

If engine alternator charging warning indicator illuminates, perform following checks:

1. Check all battery cable connections at battery, and verify that they are clean and tight.
2. Check external alternator wiring and connections, and verify that they are in good condition.
3. Check fan belt condition and tension.
4. Run engine and check alternator for noise. A loose drive pulley, loose mounting hardware, worn or dirty internal alternator bearings, a defective stator or defective diodes can cause noise. Replace a worn or defective alternator.

Fuel Level Sender

Fuel Level Indicator Testing

1. Fuel level sender wiring harness leads can be accessed from lowered fuel tank. *Refer to Section — Engine Exhaust System*, for detailed fuel tank removal and installation.
2. Disconnect fuel level sender wiring harness leads.
3. With the help of an assistant, touch both harness leads together using jumper wire.
4. From operator cab, have assistant turn ignition key switch to RUN position. DO NOT start engine. Observe fuel level indicator needle on operator instrument cluster. Reading must be at FULL mark.
5. Turn ignition key switch to OFF position. Fuel level indicator needle should return to EMPTY position.

4.4. Boom Chain Tension Adjustment

Chain tension is set at the threaded adjusting studs by means of the disc spring stacks and the double M22 nuts.

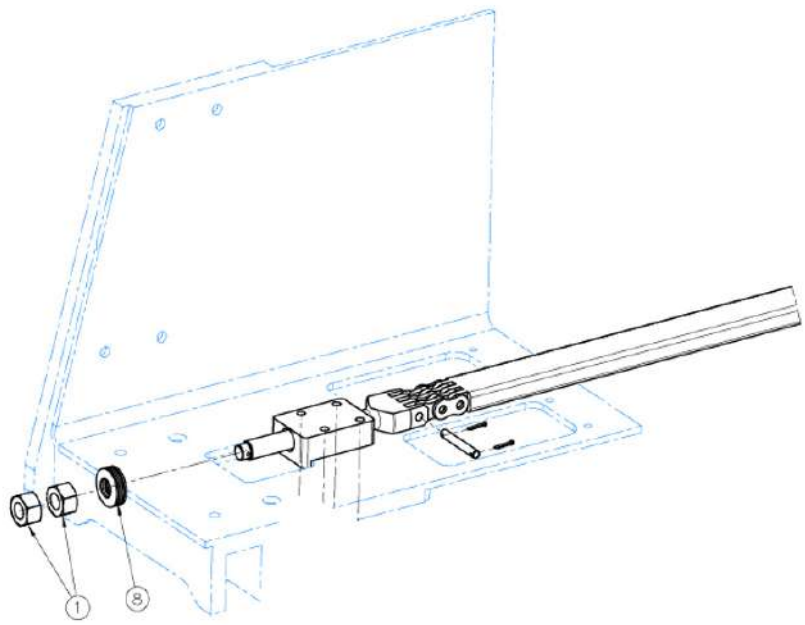

Chain adjusting stud. 1 - M22 adjusting nut and counternut. 8 - disc spring stack.

1. Park the machine on a firm, level surface. Place the transmission in (N) NEUTRAL, engage the park brake switch and chock the wheels. Fit the boom safety prop before any work is carried out under the boom. Refer to Section 3.3. Never stand under the boom while it is moving.
2. Raise the boom to the horizontal position and cycle the boom through two full extend and retract cycles so the chain links seat, then return the boom to the horizontal position and turn the engine off.
3. Verify the disc spring stacks. Two disc springs are fitted to each adjusting stud and must be stacked back to back in opposition. Disc springs stacked in the same direction cannot flex and give no shock absorption. Lightly grease the springs.
4. Measure the chain sag at the mid-point of the chain with a caliper or a tape measure. Tighten the first M22 nut with a 32 mm wrench until the sag is 0.24 to 0.47 in (6 to 12 mm).
5. Verify that at least 0.04 in (1 mm) of spring travel remains. The disc springs must never be compressed flat: a stack compressed solid removes all shock absorption and can break the chain.
6. Measure the exposed thread length of the right and left adjusting studs with a caliper and equalize them within 0.02 in (0.5 mm). Unequal thread lengths twist the boom as it extends and score the wear pads.
7. Hold the first nut with a 32 mm wrench and tighten the second M22 nut (counternut) against it to 170 ft-lb (230 Nm) with a torque wrench. Mark the nut with torque seal after tightening.
8. Start the engine and cycle the boom through three full extend and retract cycles. The boom sections must move evenly and quietly with no knocking or binding. If knocking, binding or noise is present, repeat the adjustment from the sag measurement.

Note: If the adjusting nut runs out of thread on the anchor stud before correct tension is reached, the chain has elongated beyond its service limit and must be replaced.

NOTICE — Component damage hazard. Operating the boom with incorrectly adjusted chains can damage the chains and the boom sections. A twisted chain caused by turning the adjusting nut without holding the stud will wear rapidly.

4.5. Implement Pump Pressure Checks and Adjustment

Note: Two persons are required for these procedures. System pressure settings are listed in Section 8.2.

Standby (Load Sense) Pressure

1. Connect a pressure gauge to test port [TBD].
2. Start the engine and run at low idle with all functions in neutral.
3. Observe the gauge. Specified standby pressure: [TBD].
4. If adjustment is required, loosen the locknut on the standby adjustment screw of the pump regulator. Turn the screw clockwise to increase or counterclockwise to decrease the pressure, then tighten the locknut.
5. Turn the engine off and remove the gauge.

Cut-off (Compensator) Pressure

1. Connect a pressure gauge to test port [TBD].
2. Start the engine and run at low idle.
3. Operate a boom function to the end of its stroke and hold it over relief.
4. Observe the gauge. Specified cut-off pressure: [TBD].
5. If adjustment is required, adjust the compensator screw on the pump regulator in small increments, re-checking the pressure after each adjustment. Tighten the locknut.
6. Turn the engine off and remove the gauge.

4.6. Accumulator Pre-charge Check

Check the pre-charge pressure at the intervals given in Section 3, and whenever the brake circuit shows a reduced number of brake applications with the engine off, slow brake response or repeated brake warning indications.

DANGER — Stored energy hazard. Hydraulic accumulators remain charged after the engine is turned off and hold pressure even when the hydraulic system is otherwise relieved. Discharge the accumulators before disconnecting any line or removing any component in the brake circuit. Never disassemble, drill, cut or weld an accumulator, and never expose it to heat or flame.,

1. Discharge the accumulators. Refer to Discharging the Accumulators.
2. Remove the protective cap from the gas valve at the top of the accumulator.
3. Fit a nitrogen charging and gauging assembly to the gas valve.
4. Read the pre-charge pressure. Compare the reading with the value in the Accumulator Data table. The pre-charge must be checked with the hydraulic side fully discharged; a reading taken with hydraulic pressure present is not valid.
5. If the pre-charge is low, charge the accumulator with nitrogen only, in small increments, until the specified pressure is reached.
6. Remove the charging assembly, check the gas valve for leaks and install the protective cap.

WARNING — Bodily injury hazard. Use nitrogen only. Charging an accumulator with oxygen or compressed air can cause an explosion.

4.7.Hydraulic Tank Oil Draining

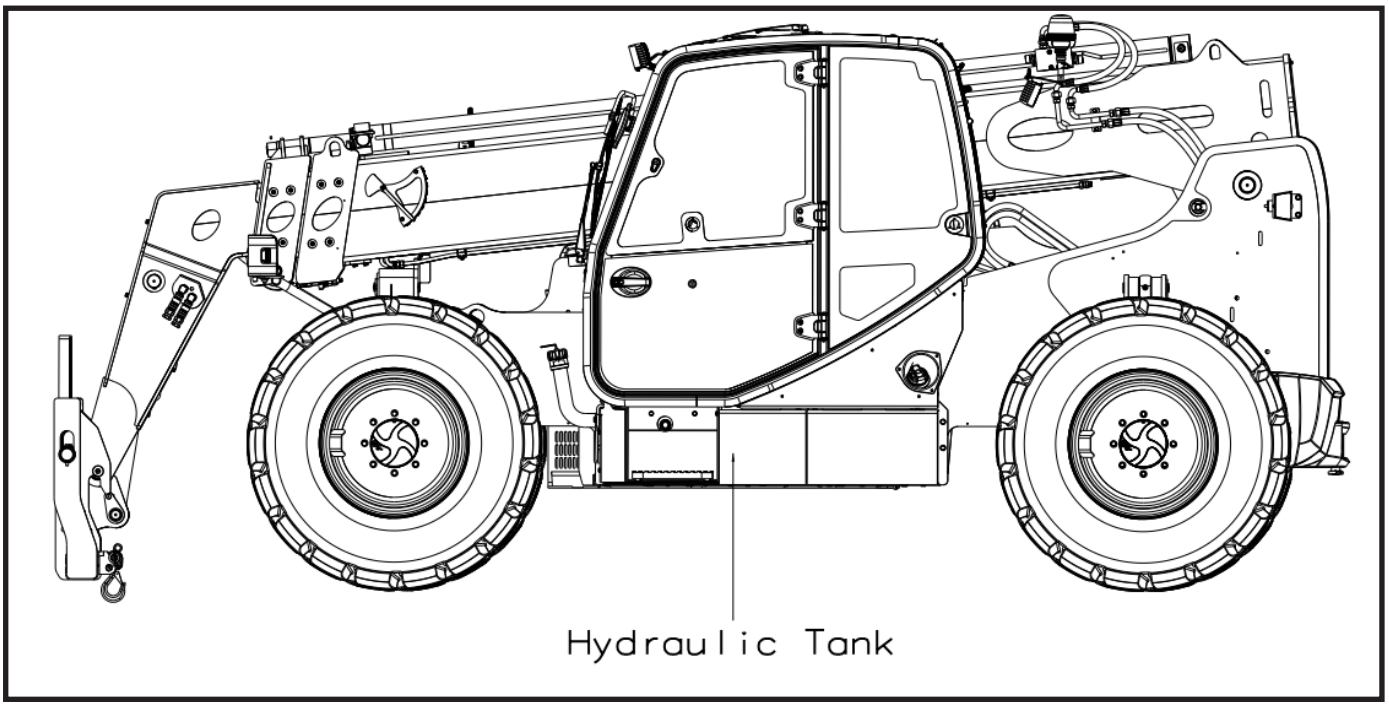

1. Park the machine on a firm, level surface, level the machine, fully retract the boom, lower the boom, place the transmission in (N) NEUTRAL, engage the park brake and shut the engine OFF.
2. Place a Do Not Operate Tag on both the ignition key switch and the steering wheel.
3. Open the engine cover. Allow the system fluids to cool.
4. Properly disconnect the battery. *Refer to Section — Battery*, for procedure.

5. Remove the drain plugs (**1**) on the bottom of the hydraulic oil reservoir.

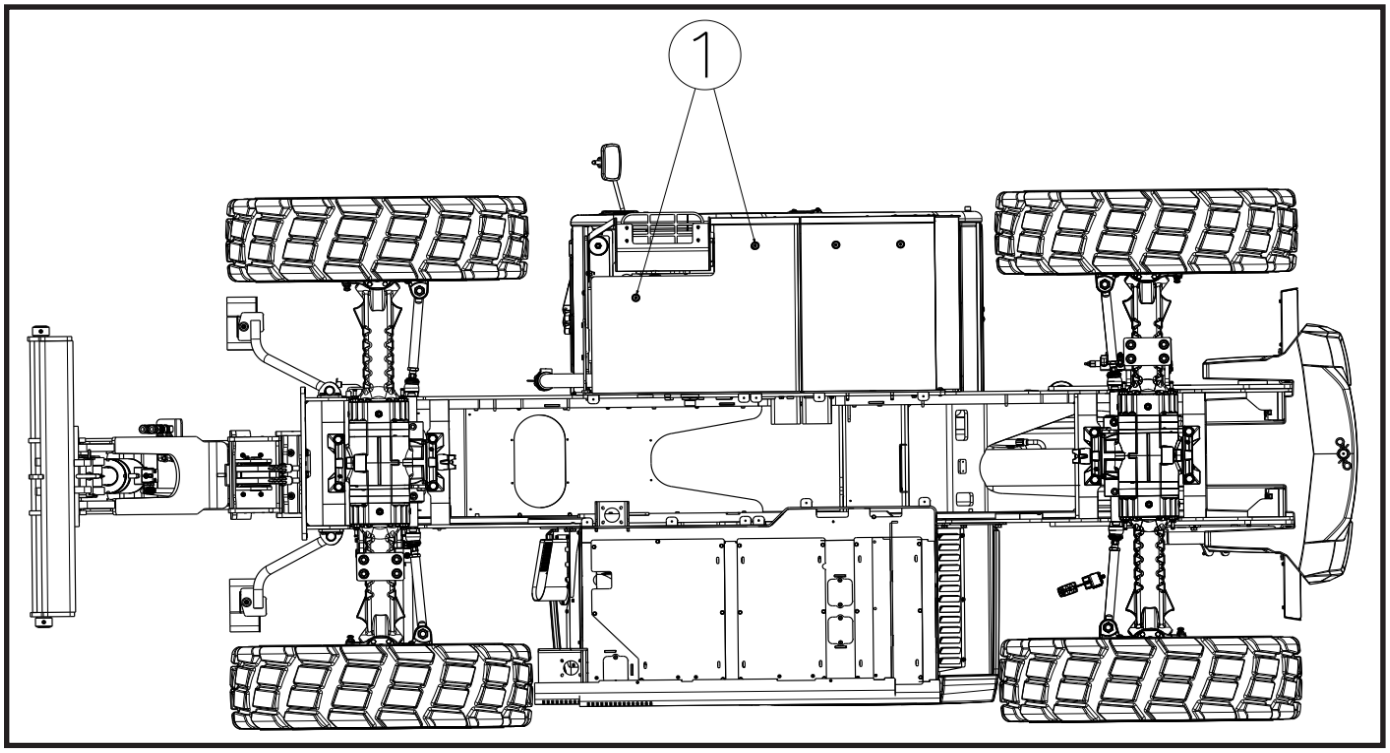

6. Transfer the used hydraulic oil into a suitable covered container, and label as “Used Oil”. Dispose of used oil at an approved recycling facility. Clean and reinstall the drain plug.
7. Wipe up any hydraulic fluid spillage in, on, near and around the machine and the work area.

4.8.Hydraulic Tank Oil Filling

1. Be sure the reservoir is clean and free of all debris.
2. Install a new hydraulic oil filter. *Refer to Section — Hydraulic Filter Replacement*.
3. Fill the reservoir with oil until oil level is visible in the gauge window (**1**). *Refer to Section — Fluid and Lubrication Capacit*

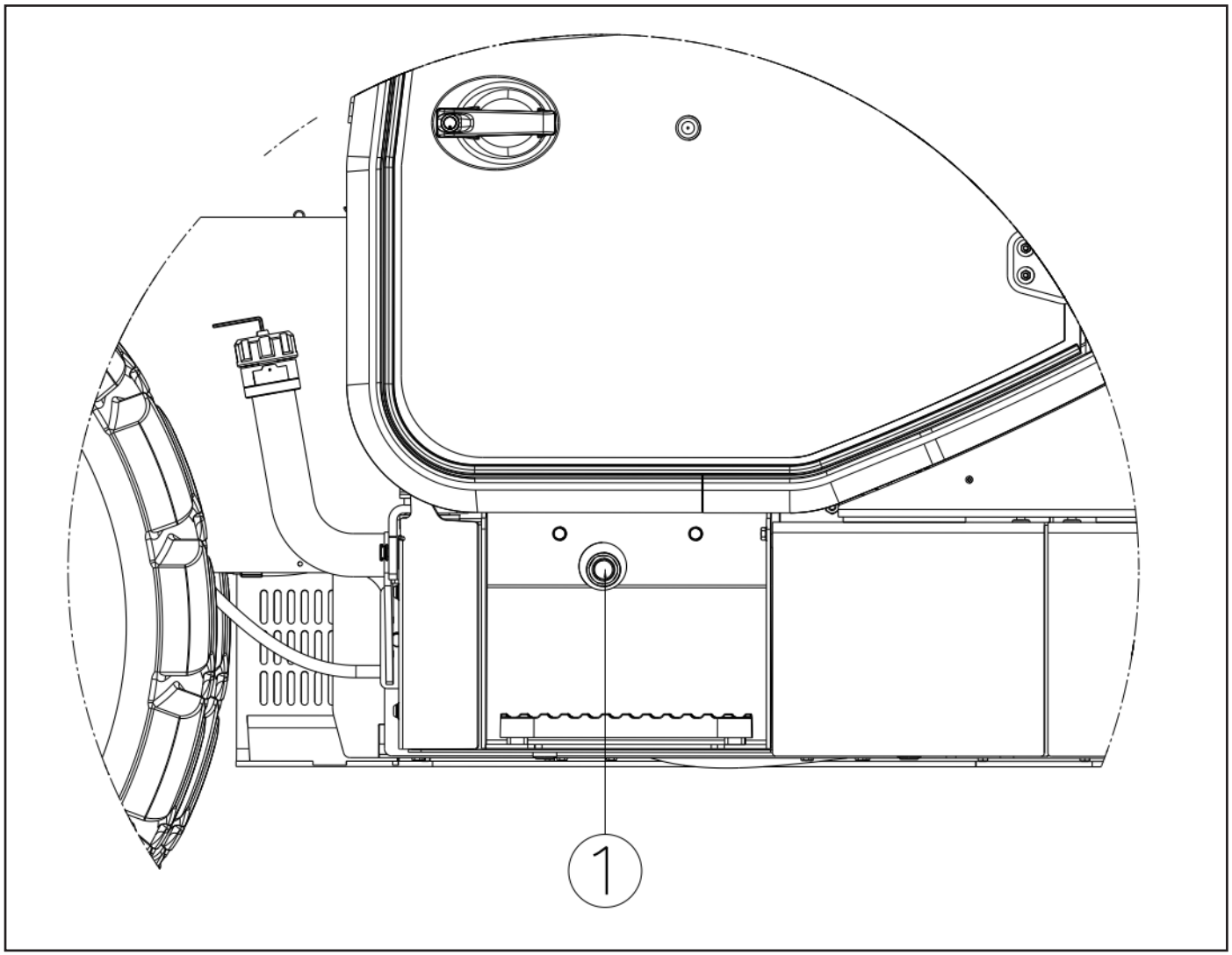

4. Properly connect the battery. *Refer to Section — Battery*, for procedure.
5. Start machine and check all hydraulic functions for proper operation. Check for any hydraulic oil leaks. Shut machine OFF and check hydraulic oil level. If oil is warm, oil level should be visible in the gauge window (**1**). Add hydraulic oil if necessary.
6. Remove the Do Not Operate Tag from the ignition key switch and the steering wheel.

5. ELECTRICALS

5.1.Electrical Component Terminology

To understand the safety, operation, and service information presented in this section, it is necessary that the operator/mechanic be familiar with the name and location of the electrical components of the machine. The following illustration identifies the components that are referred to throughout this section.

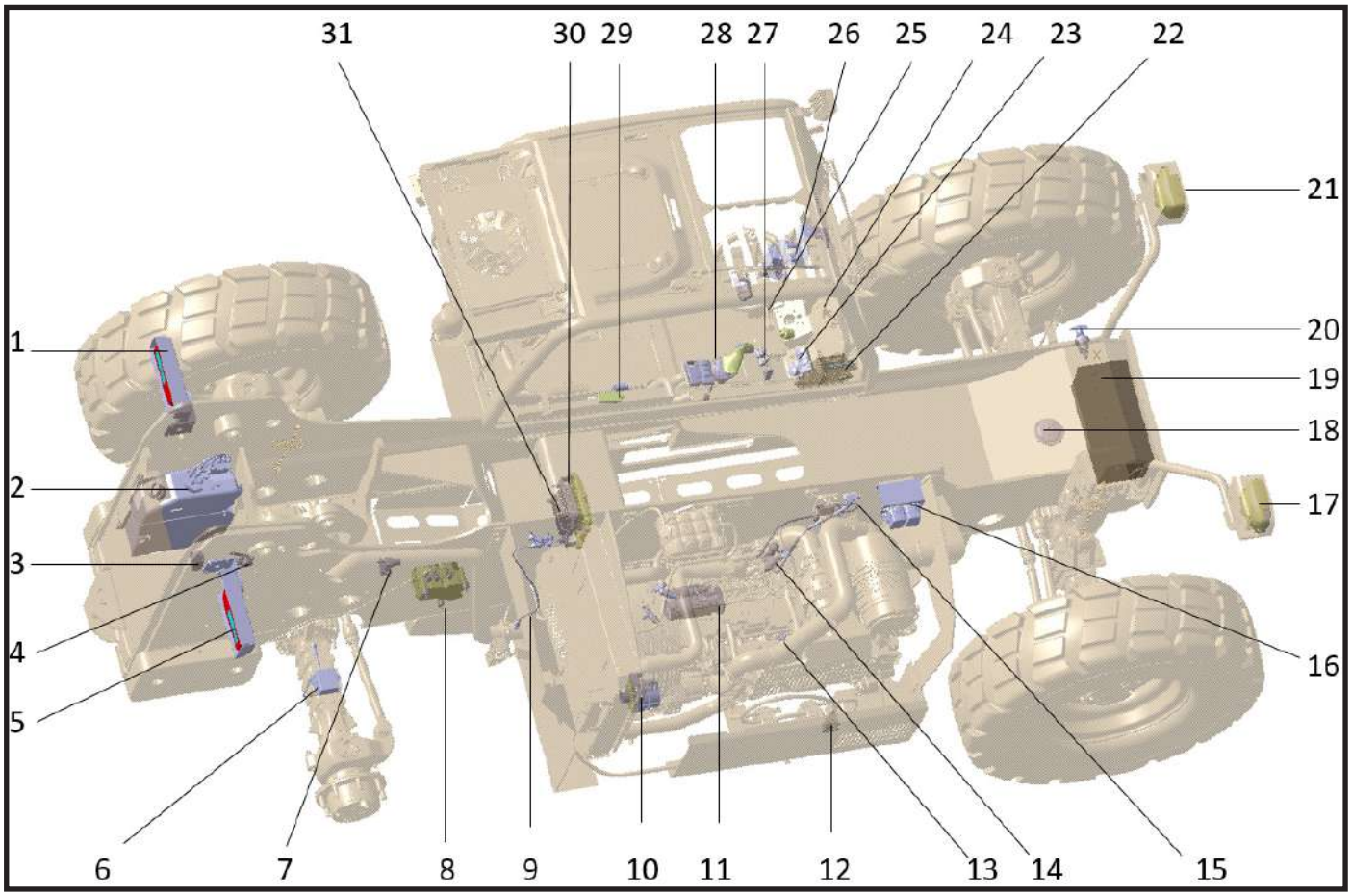

1	Rear Warning Lamps (Left)	**17**	Right Headlight
2	Urea Tank Quality&Temp Sensor (Option 944&1044)	**18**	Horn
3	Reverse Alarm	**19**	Battery
4	Boom Angle Sensor	**20**	Battery Off Switch
5	Rear Warning Lamps (Right)	**21**	Left Headlight
6	Loadcell (Option)	**22**	Machine Control Unit, Actuator
7	Urea Tank Heating Valve (Option 944&1044)	**23**	Ignition Key&Machine Control Switchs
8	DEF Pump (Option 944&1044)	**24**	Display Panel, Revo Plus
9	NOX Sensor Out (Option 944&1044)	**25**	Transmission Control Lever
10	Alternator	**26**	Power Distribution Relay&Fuse Boxes
11	Starter	**27**	Finger Joystick
12	Fuel Transfer Pump	**28**	Joystick
13	Ambient Sensor (Option 944&1044)	**29**	Telemetry
14	DEF Injector	**30**	Transmission ECM
15	NOX Sensor In	**31**	Engine (ECM)
16	Engine Power Distribution, Relay&Fuse Boxes		

5.2.Harness Layout

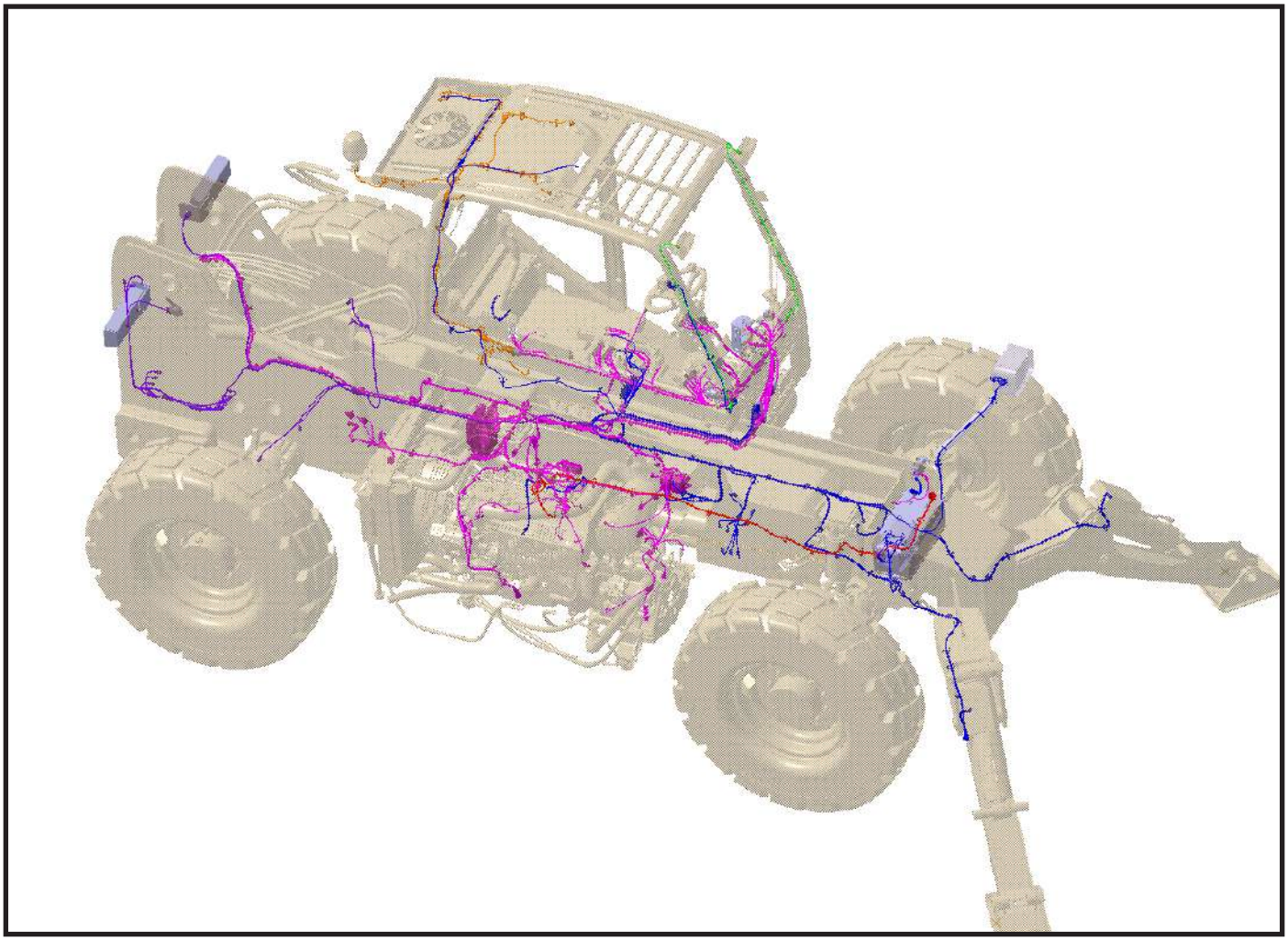

5.3.Cabin Harnesses Layout

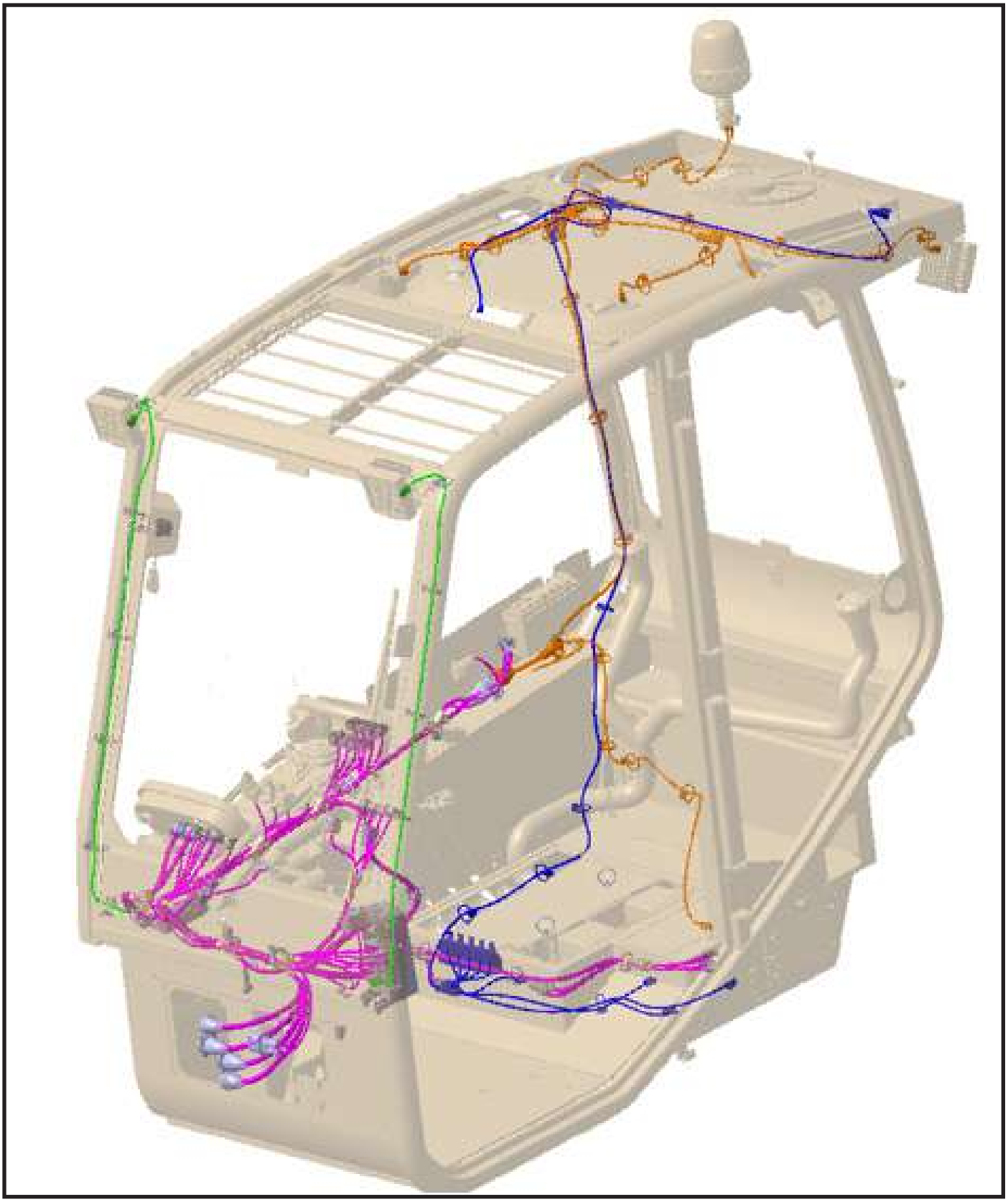

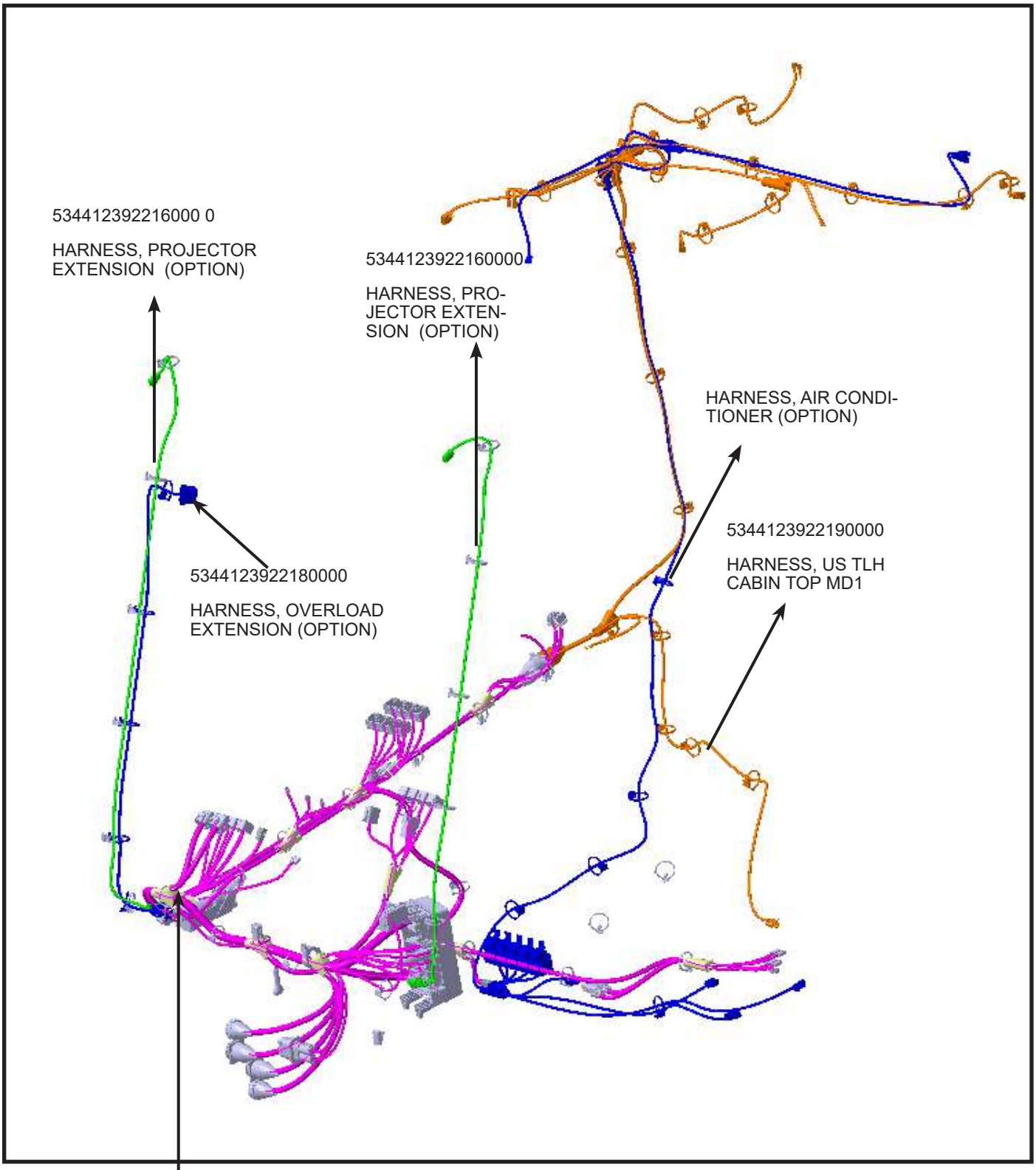
534412392216000 0
HARNESS, PROJECTOR EXTENSION (OPTION)
5344123922160000
HARNESS, PRO-JECTOR EXTEN-SION (OPTION)
HARNESS, AIR CONDI-TIONER (OPTION)
5344123922190000
HARNESS, US TLH CABIN TOP MD1
5344123922180000
HARNESS, OVERLOAD EXTENSION (OPTION)
5344343922030000
HARNESS, YTLH US RELAY & FUSES GROUP MD1

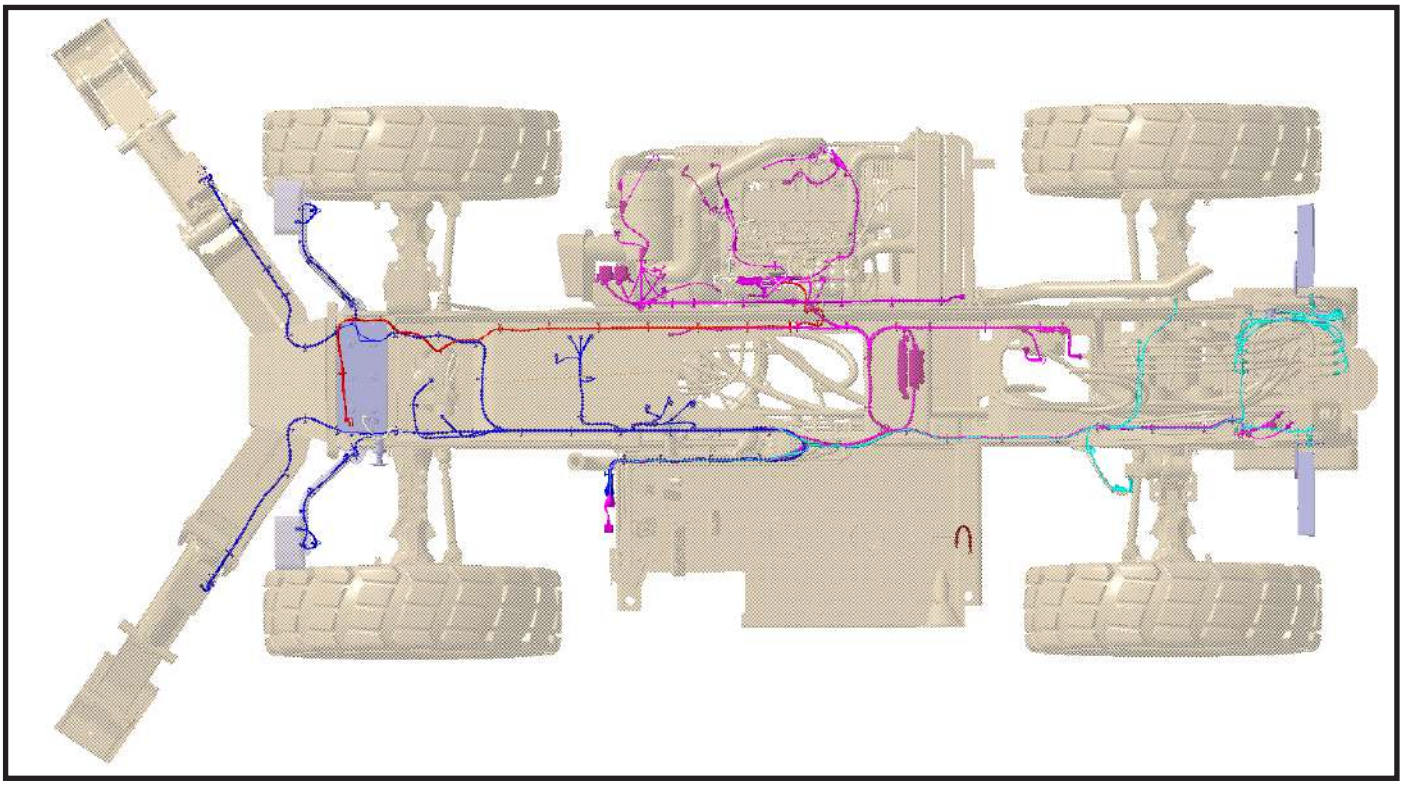

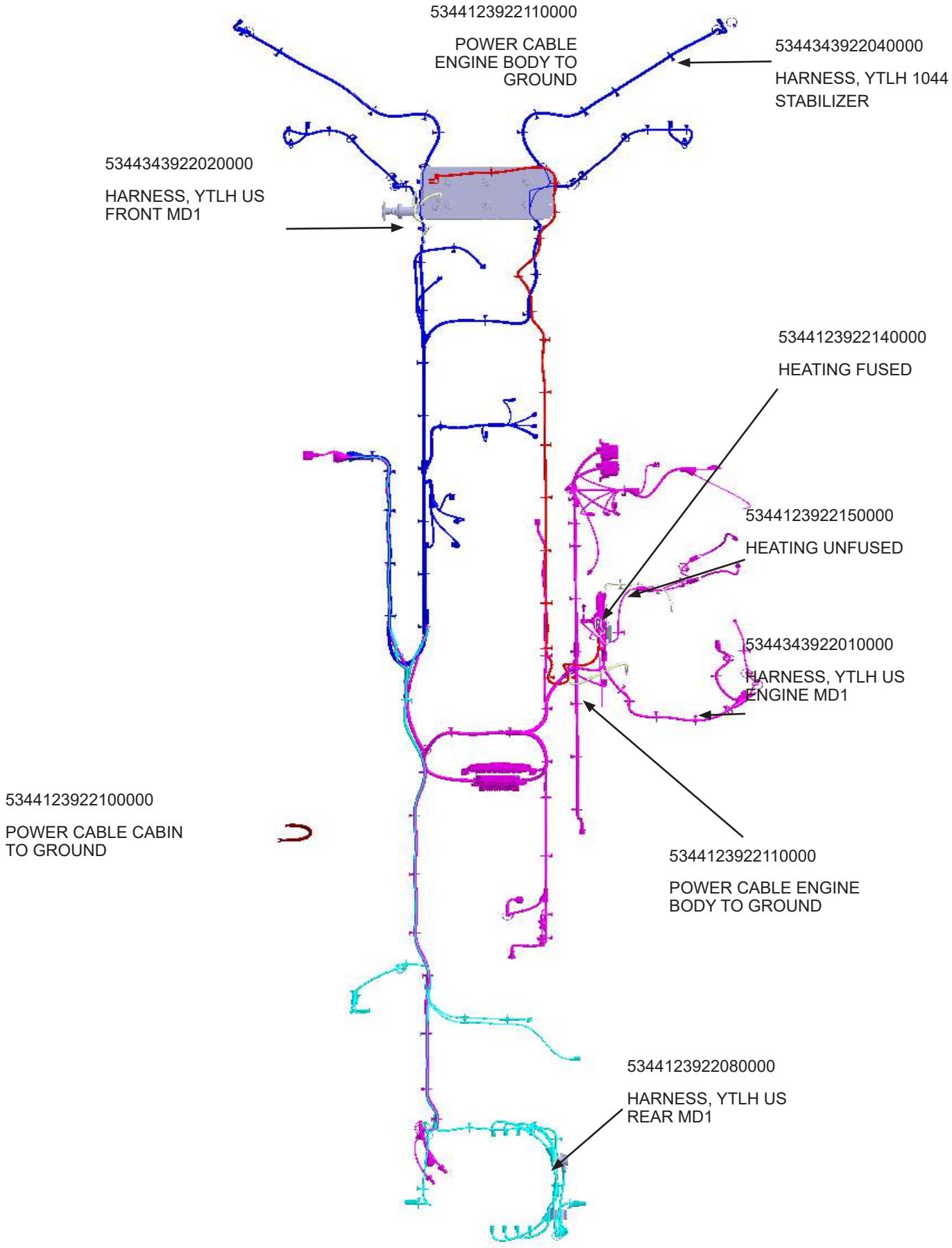
5344123922110000
POWER CABLE ENGINE BODY TO GROUND
5344343922040000
HARNESS, YTLH 1044 STABILIZER
5344343922020000
HARNESS, YTLH US FRONT MD1
5344123922140000
HEATING FUSED
5344123922150000
HEATING UNFUSED
5344343922010000
HARNESS, YTLH US ENGINE MD1
5344123922100000
POWER CABLE CABIN TO GROUND
5344123922110000
POWER CABLE ENGINE BODY TO GROUND
5344123922080000
HARNESS, YTLH US REAR MD1

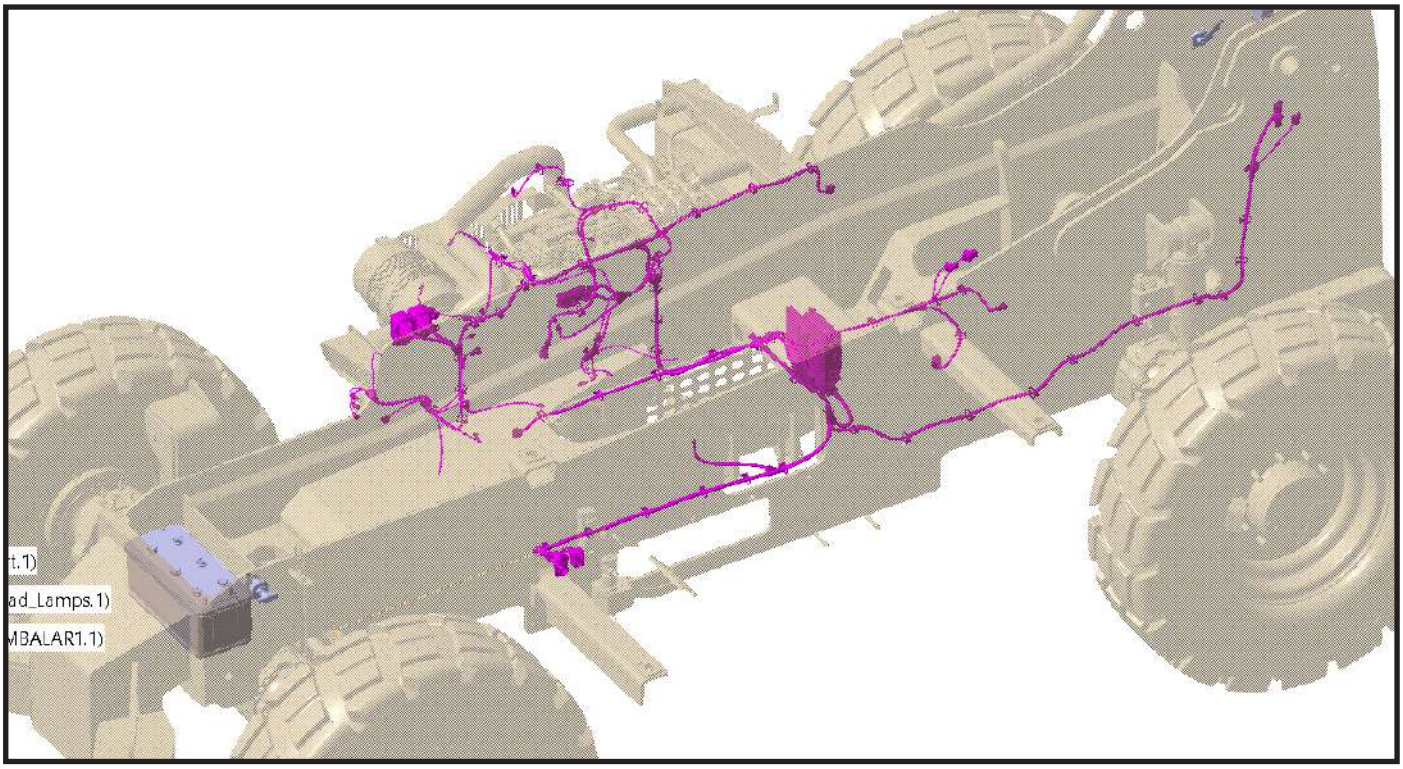

5344343922010000

HARNESS, YTLH US ENGINE MD1

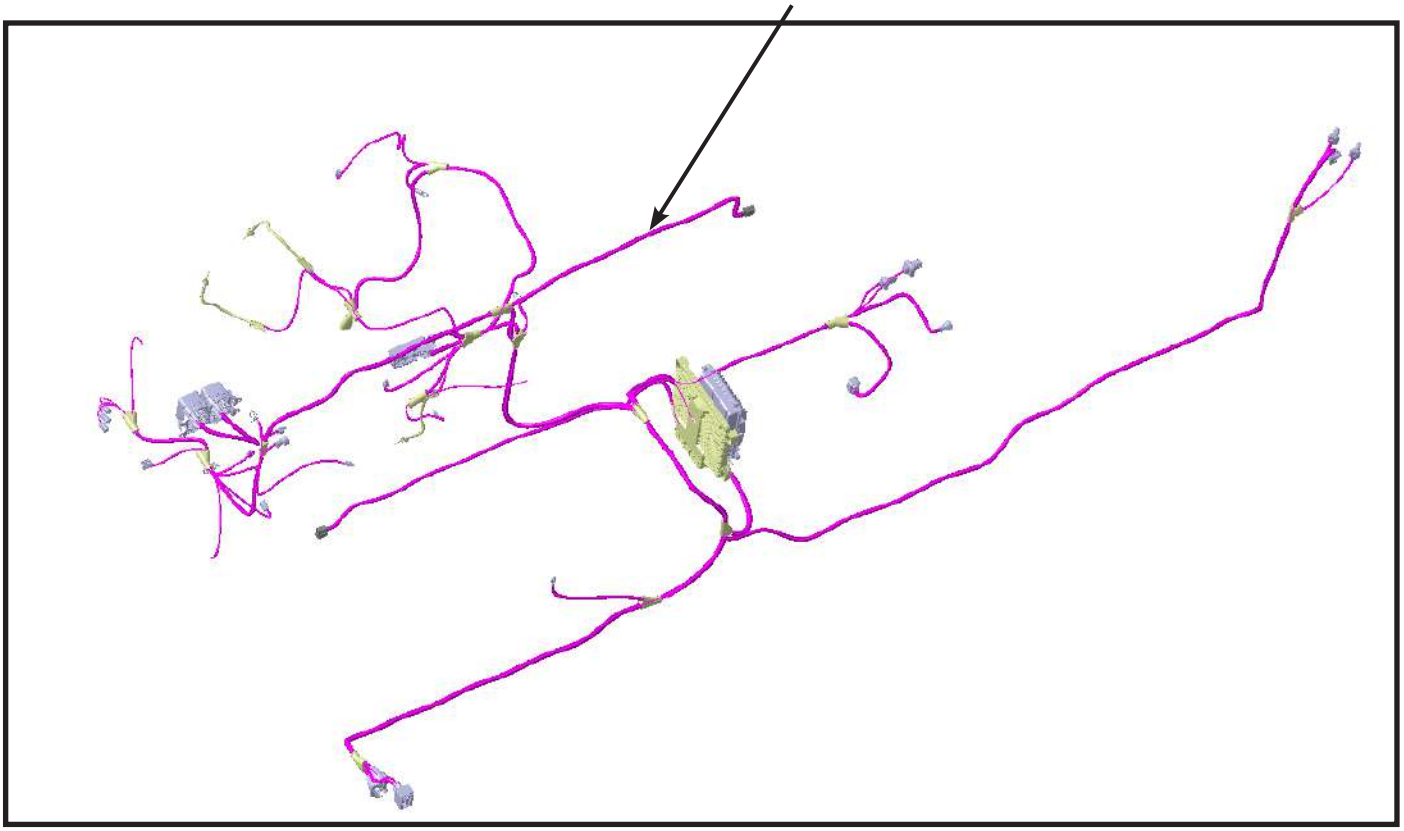

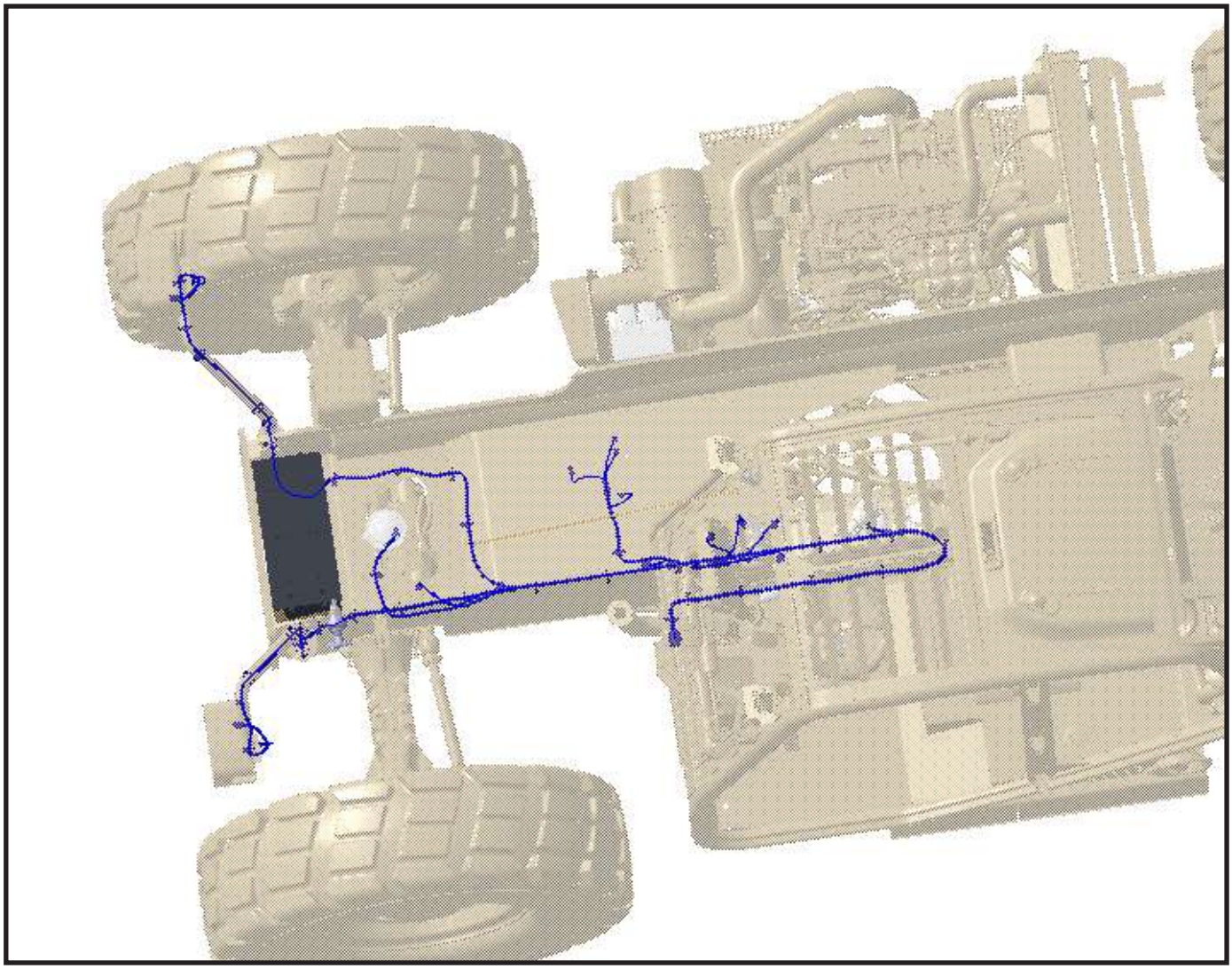

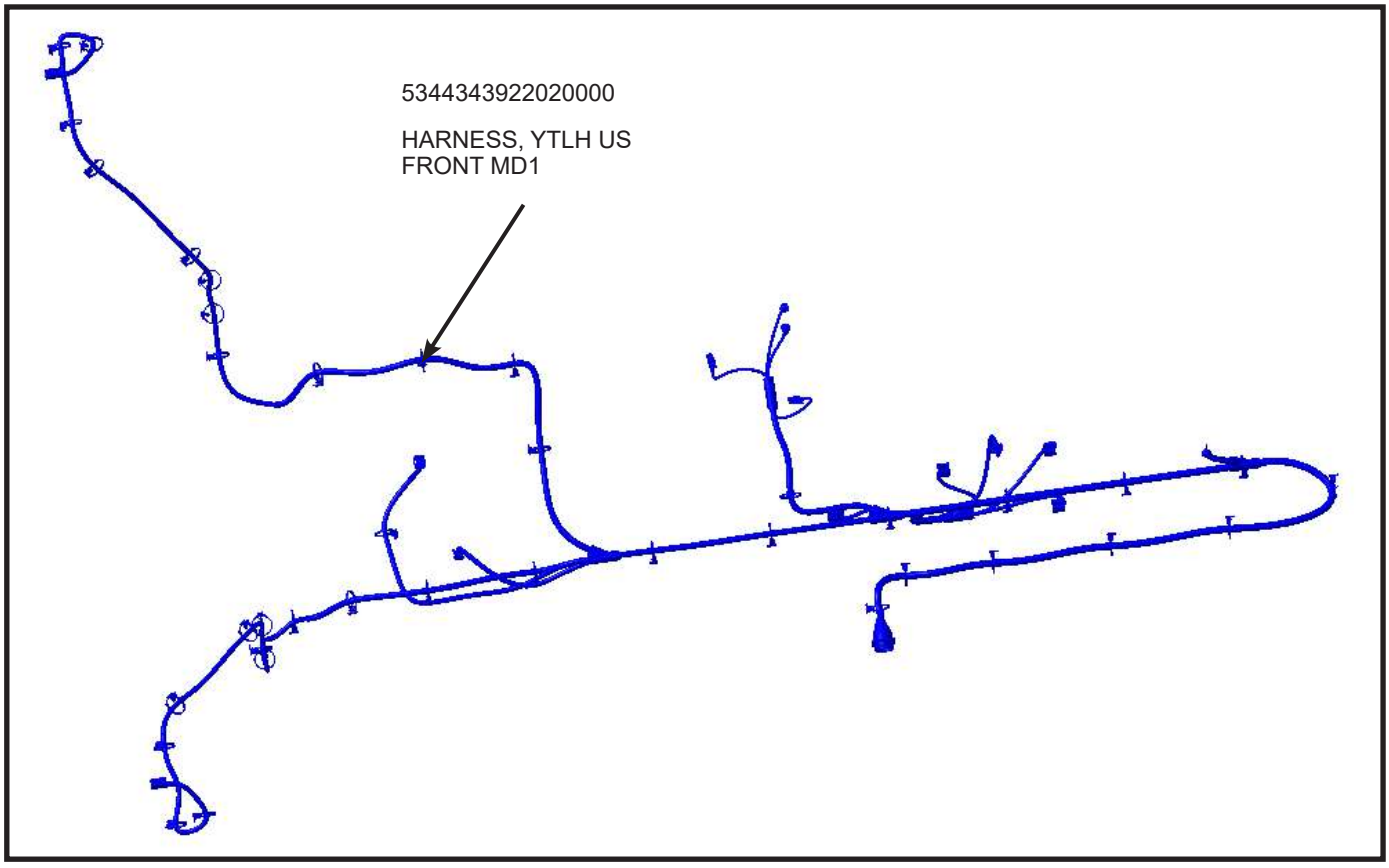
5344343922020000
HARNESS, YTLH US
FRONT MD1

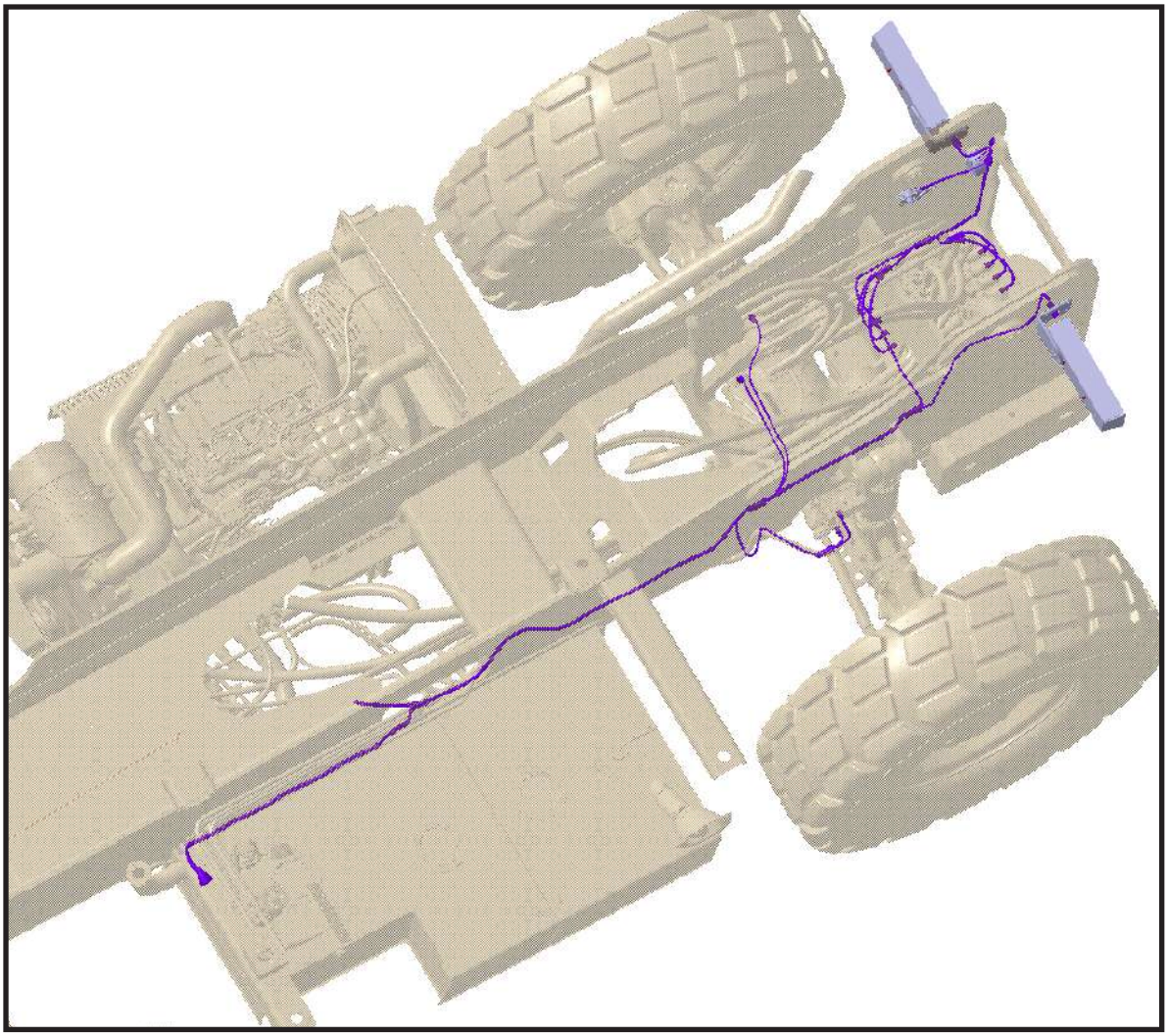

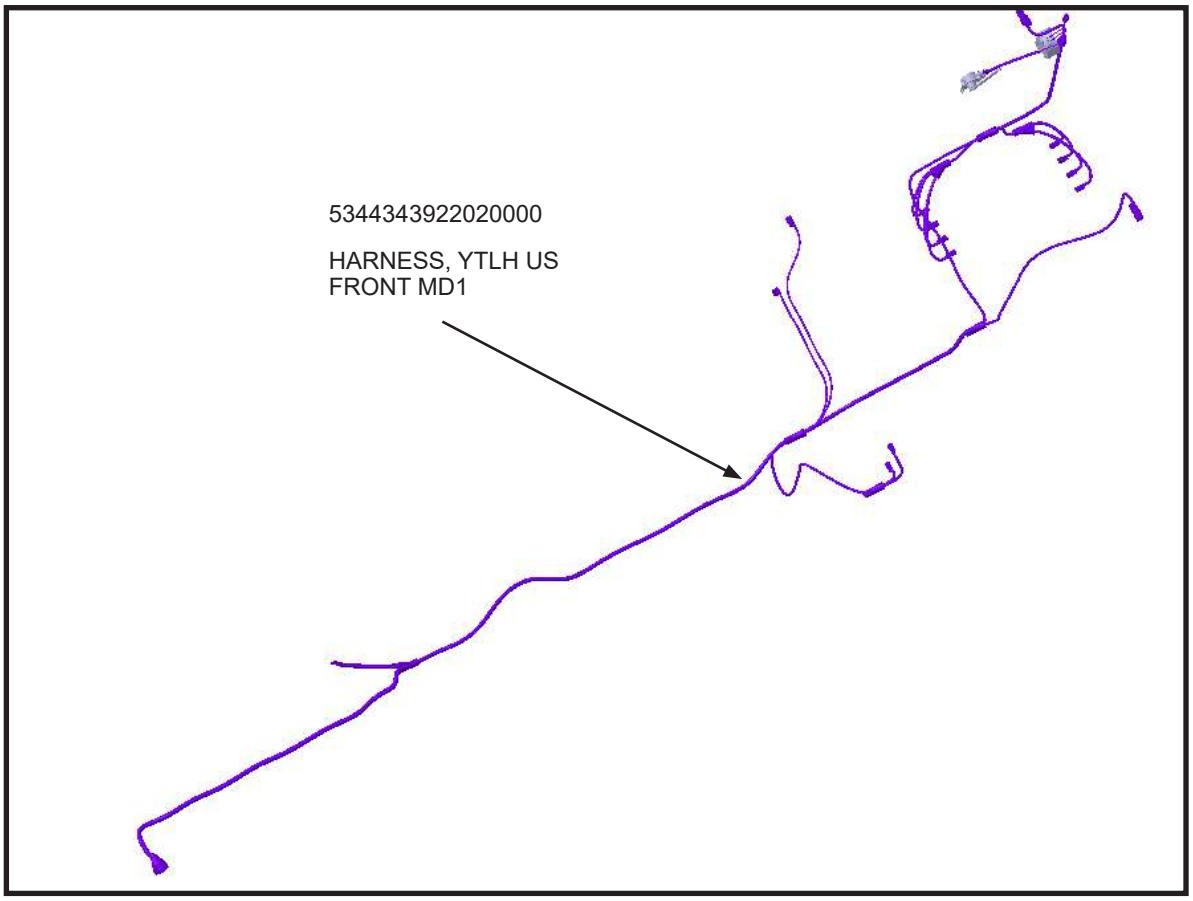
5344343922020000
HARNESS, YTLH US
FRONT MD1

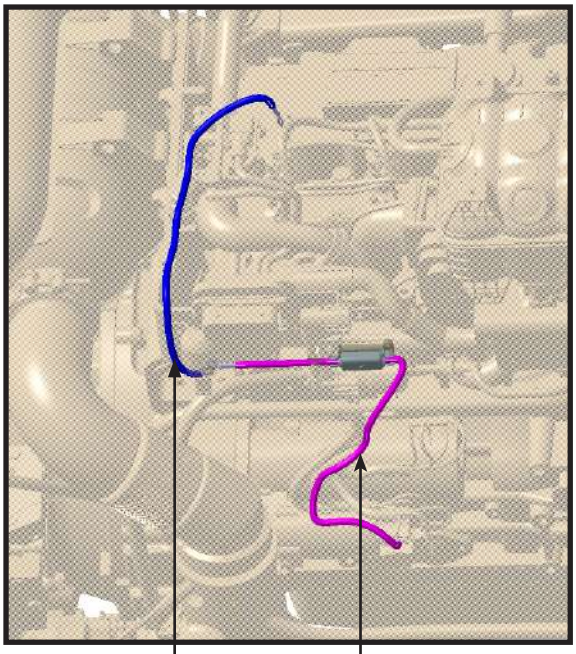

5344123922150000

HEATING UN-FUSED

5344123922140000

HEATING FUSED

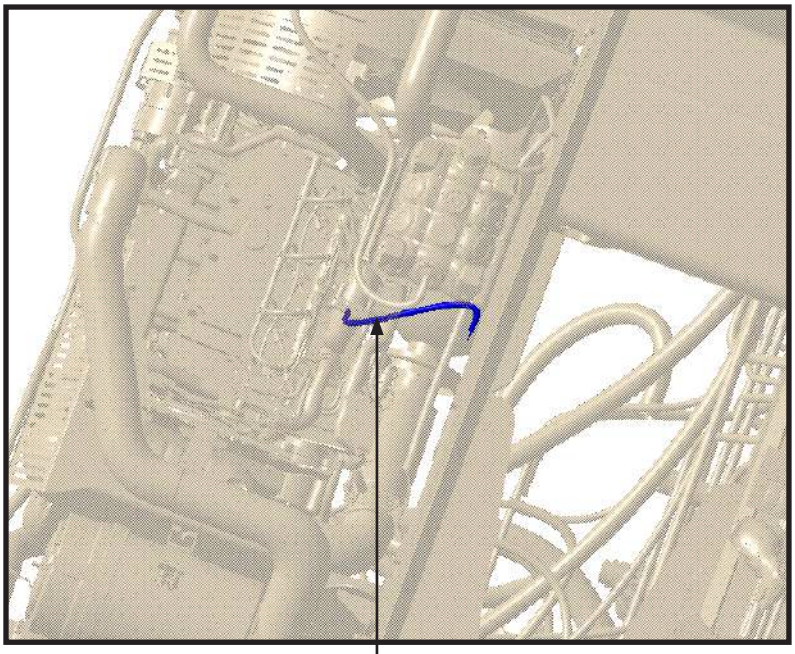

5344123922110000

POWER CABLE ENGINE BODY TO GROUND

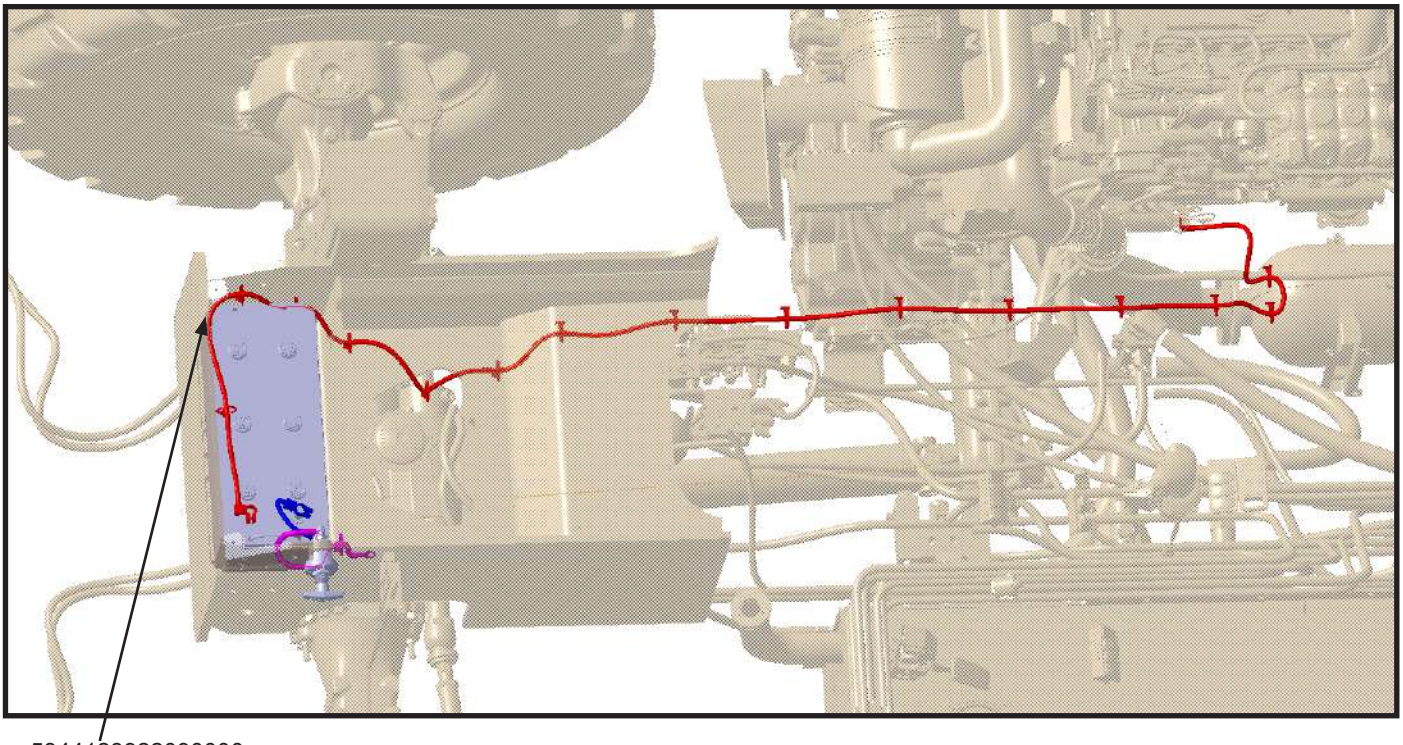

5344123922090000

POWER CABLE BAT-TERY + TO STARTER

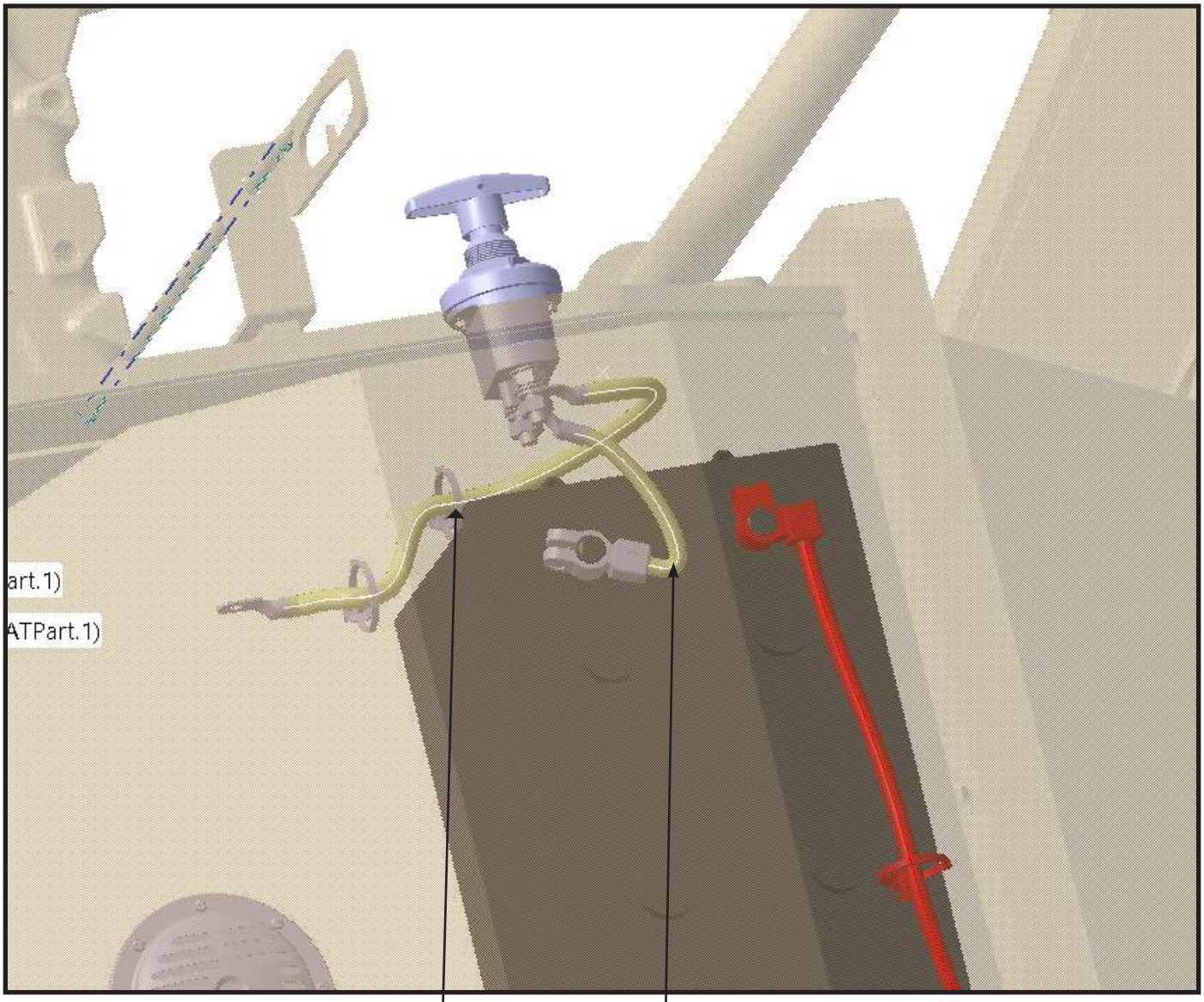

5344123922130000

DISCONNECT SWITCH TO GROUND

5344123922120000

POWER CABLE BATTERY TO **DISCONNECT**

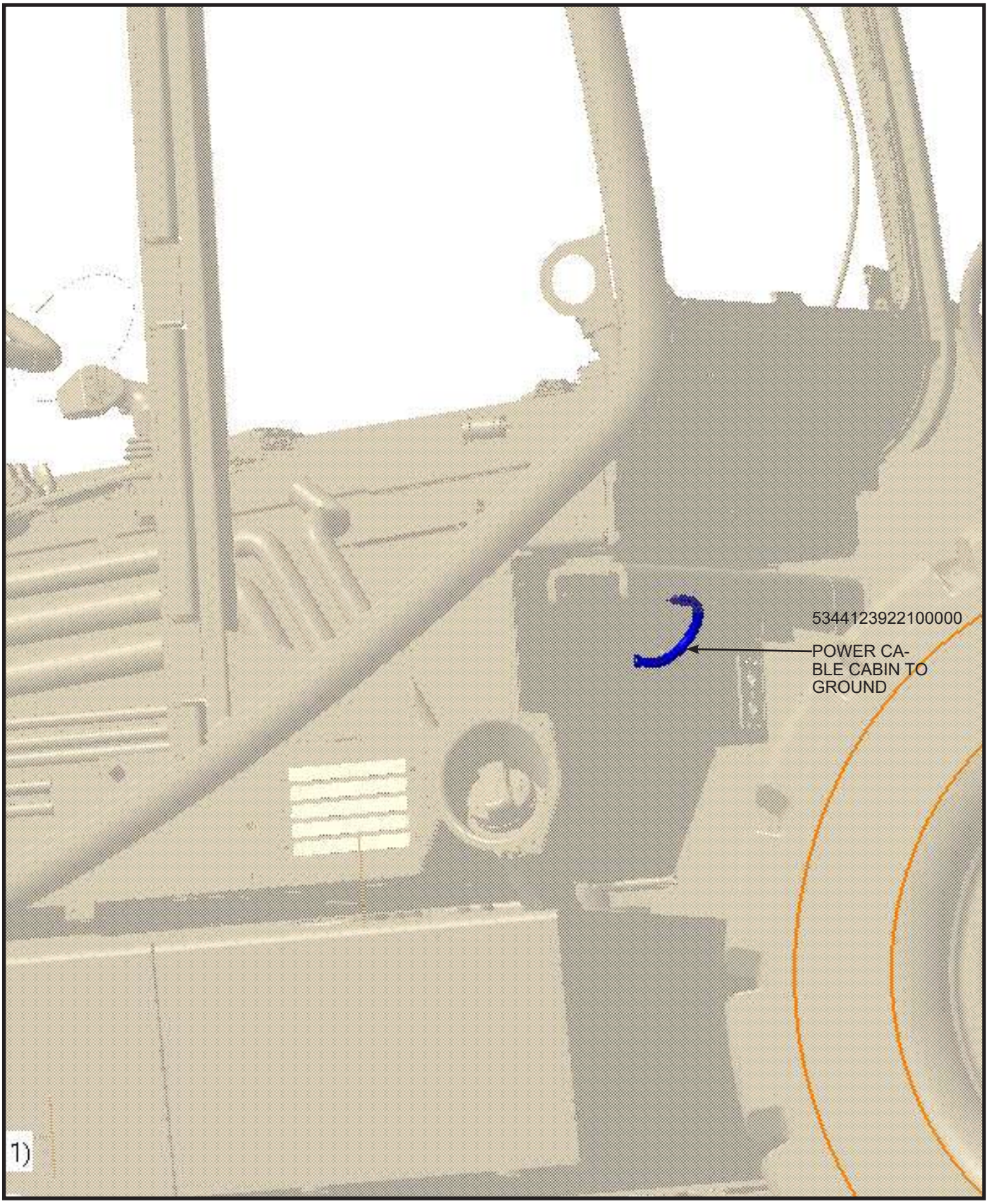
5344123922100000
POWER CA-
BLE CABIN TO
GROUND
1)

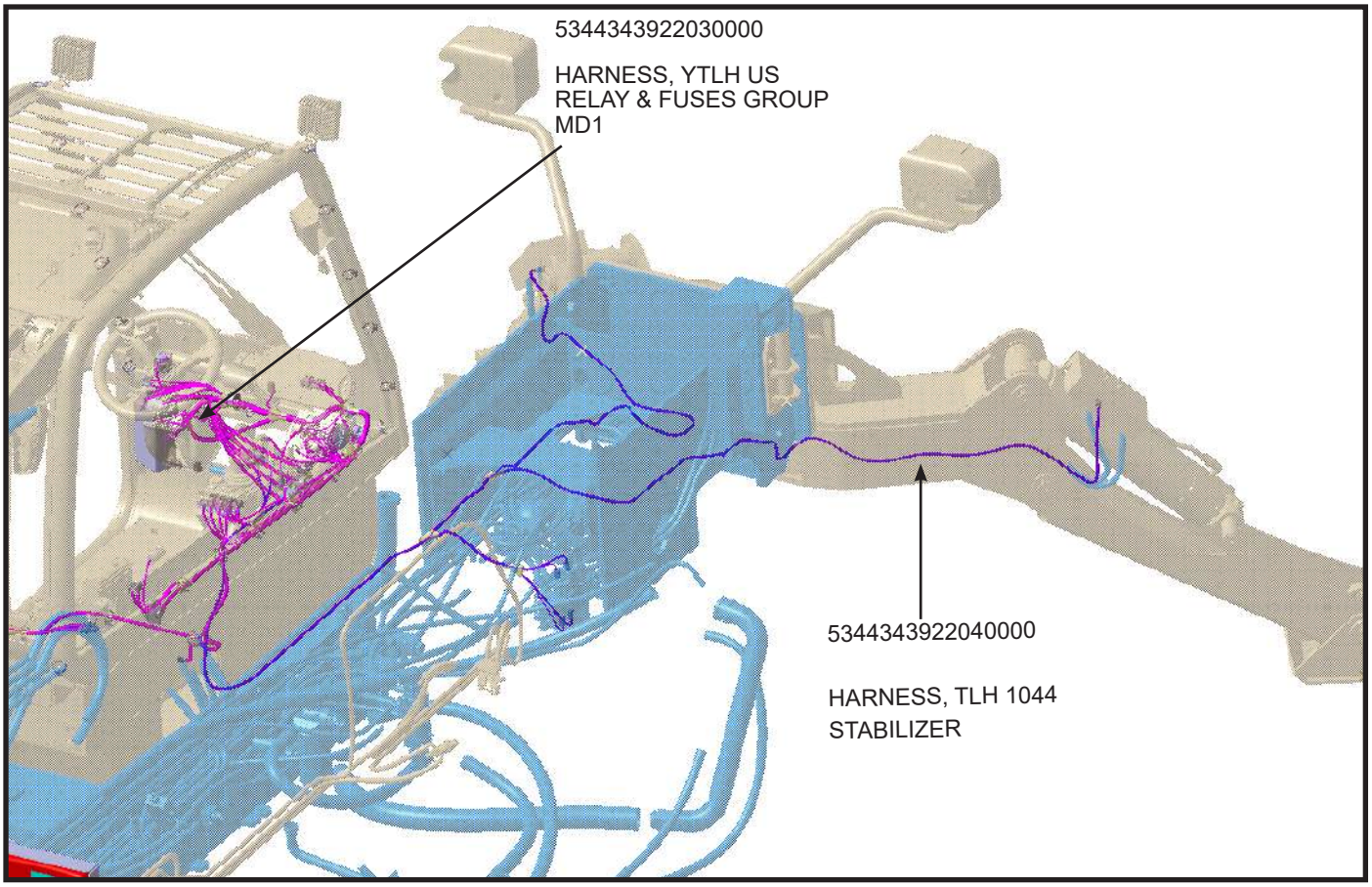
5344343922030000
HARNESS, YTLH US
RELAY & FUSES GROUP
MD1
5344343922040000
HARNESS, TLH 1044
STABILIZER

6. CONVERSION TABLE

METHOD OF USING THE CONVERSION TABLE

The conversion table in this section is provided to enable simple conversion of figures.

For details of the method of using the conversion table, see the example given below.

1. **Convert 58 mm into inches**.
- Locate the number 50 in the vertical column at the left side, then drow a horizontal line.
- Locate the number 8 in the row across the top, take this as, then draw a perpendicular line down.
- Take the point where the two lines cross. This point gives the value when converting from milimeters to inches. Therefore, 58mm = 2.283 in.

2. **Convert 580 mm into inches**
- The number 580 does not appear in the table, so divide by 10 (move the decimal point one place to the left) to convert it to 58 mm.
- Carry out the same procedure as above to convert 58 mm to 2.283 in.
- The original value (580 mm) was divided by 10, so multiply 2.283 in. by 10 (move the decimal point one place to the right) to return to the original value. This gives 580 mm = 22.83 in.

From milimeters to inches

	0	1	2	3	4	5	6	7	8	9
0	0	0.039	0.079	0.118	0.157	0.197	0.236	0.276	0.315	0.354
10	0.394	0.433	0.472	0.512	0.551	0.591	0.630	0.669	0.709	0.748
20	0.787	0.827	0.866	0.906	0.945	0.984	1.024	1.063	1.102	1.142
30	1.181	1.220	1.260	1.299	1.339	1.378	1.417	1.457	1.496	1.536
40	1.575	1.614	1.654	1.693	1.732	1.772	1.811	1.850	1.890	1.929
50	1.969	2.008	2.047	2.087	2.126	2.165	2.205	2.244	2.283	2.323
60	2.362	2.402	2.441	2.480	2.520	2.559	2.598	2.638	2.677	2.717
70	2.756	2.795	2.835	2.874	2.913	2.953	2.992	3.032	3.071	3.110
80	3.150	3.189	3.228	3.268	3.307	3.346	3.386	3.425	3.465	3.504
90	3.543	3.583	3.622	3.661	3.701	3.740	3.780	3.819	3.858	3.898

From mm to in.

1 mm = 0.03937 in.

	0	1	2	3	4	5	6	7	8	9
0	0	0.039	0.079	0.118	0.157	0.197	0.236	0.276	0.315	0.354
10	0.394	0.433	0.472	0.512	0.551	0.591	0.630	0.669	0.709	0.748
20	0.787	0.827	0.866	0.906	0.945	0.984	1.024	1.063	1.102	1.142
30	1.181	1.220	1.260	1.299	1.339	1.378	1.417	1.457	1.496	1.536
40	1.575	1.614	1.654	1.693	1.732	1.772	1.811	1.850	1.890	1.929
50	1.969	2.008	2.047	2.087	2.126	2.165	2.205	2.244	2.283	2.323
60	2.362	2.402	2.441	2.480	2.520	2.559	2.598	2.638	2.677	2.717
70	2.756	2.795	2.835	2.874	2.913	2.953	2.992	3.032	3.071	3.110
80	3.150	3.189	3.228	3.268	3.307	3.346	3.386	3.425	3.465	3.504
90	3.543	3.583	3.622	3.661	3.701	3.740	3.780	3.819	3.858	3.898

From kg to lb.

1 kg = 2.2046 lb.

	0	1	2	3	4	5	6	7	8	9
0	0	2.20	4.41	6.61	8.82	11.02	13.23	15.43	17.64	19.84
10	22.05	24.25	26.46	28.66	30.86	33.07	35.27	37.48	39.68	41.89
20	44.09	46.30	48.50	50.71	51.91	55.12	57.32	59.53	61.73	63.93
30	66.14	68.34	70.55	72.75	74.96	77.16	79.37	81.57	83.78	85.98
40	88.18	90.39	92.59	94.80	97.00	99.21	101.41	103.62	105.82	108.03
50	110.23	112.44	114.64	116.85	119.05	121.24	123.46	125.66	127.87	130.07
60	132.28	134.48	136.69	138.89	141.10	143.30	145.51	147.71	149.91	152.12
70	154.32	156.53	158.73	160.94	163.14	165.35	167.55	169.76	171.96	174.17
80	176.37	178.57	180.78	182.98	185.19	187.39	189.60	191.80	194.01	196.21
90	198.42	200.62	202.83	205.03	207.24	209.44	211.64	213.85	216.05	218.26

From liter to U.S. Gal.

1 lt. = 0.2642 U.S. Gal.

	0	1	2	3	4	5	6	7	8	9
0	0	0.264	0.528	0.793	1.057	1.321	1.585	1.849	2.113	2.378
10	2.642	2.906	3.170	3.434	3.698	3.963	4.227	4.491	4.755	5.019
20	5.283	5.548	5.812	6.076	6.340	6.604	6.869	7.133	7.397	7.661
30	7.925	8.189	8.454	8.718	8.982	9.246	9.510	9.774	10.039	10.303
40	10.567	10.831	11.095	11.359	11.624	11.888	12.152	12.416	12.680	12.944
50	13.209	13.473	13.737	14.001	14.265	14.529	14.795	15.058	15.322	15.586
60	15.850	16.115	16.379	16.643	16.907	17.171	17.435	17.700	17.964	18.228
70	18.492	18.756	19.020	19.285	19.549	19.813	20.077	20.341	20.605	20.870
80	21.134	21.398	21.662	21.926	22.190	22.455	22.719	22.983	23.247	23.511
90	23.775	24.040	24.304	24.568	24.832	25.096	25.361	25.625	25.889	26.153

From Nm to lb.ft.

1 Nm = 0.737 lb.ft.

	0	1	2	3	4	5	6	7	8	9
0	0	0.737	1.474	2.211	2.948	3.685	4.422	5.159	5.896	6.633
10	7.370	8.107	8.844	9.581	10.318	11.055	11.792	12.529	13.266	14.003
20	14.740	15.477	16.214	16.951	17.688	18.425	19.162	19.899	20.636	21.373
30	22.110	22.847	23.584	24.321	25.058	25.795	26.532	27.269	28.006	28.743
40	29.480	30.217	30.954	31.691	32.428	33.165	33.902	34.639	35.376	36.113
50	36.850	37.587	38.324	39.061	39.798	40.535	41.272	42.009	42.746	43.483
60	44.220	44.957	45.694	46.431	47.168	47.905	48.642	49.379	50.116	50.853
70	51.590	52.327	53.064	53.801	54.538	55.275	56.012	56.749	57.486	58.223
80	58.960	59.697	60.434	61.171	61.908	82.645	63.382	64.119	64.856	65.593
90	66.330	67.067	67.804	68.541	69.278	70.015	70.752	71.489	72.226	72.963
100	73.700	74.437	75.174	75.911	76.648	77.385	78.122	78.859	79.596	80.333
110	81.070	81.807	82.544	83.281	84.018	84.755	85.492	86.229	86.966	87.703
120	88.440	89.177	89.914	90.651	91.388	92.125	92.862	93.599	94.336	95.073
130	95.810	96.547	97.284	98.021	98.758	99.495	100.232	100.969	101.706	102.443
140	103.180	103.917	104.654	105.391	106.128	106.865	107.602	108.339	109.076	109.813
150	110.550	111.287	112.024	112.761	113.498	114.235	114.972	115.709	116.446	117.183
160	117.920	118.657	119.394	120.131	120.868	121.605	122.342	123.079	123.816	124.553
170	125.290	126.027	126.764	127.501	128.238	128.975	129.712	130.449	131.186	131.923
180	132.660	133.397	134.134	134.871	135.608	136.345	137.082	137.819	138.556	139.293
190	140.030	140.767	141.504	142.241	142.978	143.715	144.452	145.189	145.926	146.663

From Nm to kgm

1 Nm = 0.102 kgm

	0	1	2	3	4	5	6	7	8	9
0	0	0.102	0.204	0.306	0.408	0.510	0.612	0.714	0.816	0.918
10	1.020	1.222	1.224	1.326	1.428	1.530	1.632	1.734	1.836	1.938
20	2.040	2.142	2.244	2.346	2.448	2.550	2.652	2.754	2.856	2.958
30	3.060	3.162	3.264	3.366	3.468	3.570	3.672	3.774	3.876	3.978
40	4.080	4.182	4.284	4.386	4.488	4.590	4.692	4.794	4.896	4.998
50	5.100	5.202	5.304	5.406	5.508	5.610	5.712	5.814	5.916	6.018
60	6.120	6.222	6.324	6.426	6.528	6.630	6.732	6.834	6.936	7.038
70	7.140	7.242	7.344	7.446	7.548	7.650	7.752	7.854	7.956	8.058
80	8.160	8.262	8.364	8.466	8.568	8.670	8.772	8.874	8.976	9.078
90	9.180	9.282	9.384	9.486	9.588	9.690	9.792	9.894	9.996	10.098
100	10.200	10.302	10.404	10.506	10.608	10.710	10.812	10.914	11.016	11.118
110	11.220	11.322	11.424	11.526	11.628	11.730	11.832	11.934	12.036	12.138
120	12.240	12.342	12.444	12.546	12.648	12.750	12.852	12.954	13.056	13.158
130	13.260	13.362	13.464	13.566	13.668	13.770	13.872	13.974	14.076	14.178
140	14.280	14.382	14.484	14.586	14.688	14.790	14.892	14.994	15.096	15.198
150	15.300	15.402	15.504	15.606	15.708	15.810	15.912	16.014	16.116	16.218
160	16.320	16.422	16.524	16.626	16.728	16.830	16.932	17.034	17.136	17.238
170	17.340	17.442	17.544	17.646	17.748	17.850	17.952	18.054	18.156	18.258
180	18.360	18.462	18.564	18.666	18.768	18.870	18.972	19.074	19.176	19.278
190	19.380	19.482	19.584	19.686	19.788	19.890	19.992	20.094	20.196	20.298

From kgm to lb.ft.

1 kgm = 7.233 lb.ft.

	0	1	2	3	4	5	6	7	8	9
0	0	7.2	14.5	21.7	28.9	36.2	43.4	50.6	57.9	65.1
10	72.3	79.6	86.8	94.0	101.3	108.5	115.7	123.0	130.2	137.4
20	144.7	151.9	159.1	166.4	173.6	180.8	188.1	195.3	202.5	209.8
30	217.0	224.2	231.5	238.7	245.9	253.2	260.4	267.6	274.9	282.1
40	289.3	296.6	303.8	311.0	318.3	325.5	332.7	340.0	347.2	354.4
50	361.7	368.9	376.1	383.4	390.6	397.8	405.1	412.3	419.5	426.8
60	434.0	441.2	448.5	455.7	462.9	470.2	477.4	484.6	491.8	499.1
70	506.3	513.5	520.8	528.0	535.2	542.5	549.7	556.9	564.2	571.4
80	578.6	585.9	593.1	600.3	607.6	614.8	622.0	629.3	636.5	643.7
90	651.0	658.2	665.4	672.2	679.9	687.1	694.4	701.6	708.8	716.1
100	723.3	730.5	737.8	745.0	752.2	759.5	766.7	773.9	781.2	788.4
110	795.6	802.9	810.1	817.3	824.6	831.8	839.0	846.3	853.5	860.7
120	868.0	875.2	882.4	889.7	896.9	904.1	911.4	918.6	925.8	933.1
130	940.3	947.5	954.8	962.0	969.2	876.5	983.7	990.9	998.2	1005.4
140	1012.6	1019.9	1027.1	1034.3	1041.5	1048.8	1056.0	1063.2	1070.5	1077.7
150	1084.9	1092.2	1099.4	1106.6	1113.9	1121.1	1128.3	1135.6	1142.8	1150.0
160	1157.3	1164.5	1171.7	1179.0	1186.2	1193.4	1200.7	1207.9	1215.1	1222.4
170	1129.6	1236.8	1244.1	1251.3	1258.5	1265.8	1273.0	1280.1	1287.5	1294.7
180	1301.9	1309.2	1316.4	1323.6	1330.9	1338.1	1345.3	1352.6	1359.8	1367.0
190	1374.3	1381.5	1388.7	1396.0	1403.2	1410.4	1417.7	1424.9	1432.1	1439.4

From bar to psi (lb/in2)

1 bar = 14.503 psi

	0	1	2	3	4	5	6	7	8	9
0	0	14.5	29.0	43.5	58.0	72.5	87.0	101.5	116.0	130.5
10	145.0	159.5	174.0	188.5	203.0	217.5	232.0	246.5	261.0	275.6
20	290.0	304.6	319.1	333.6	348.1	362.6	377.1	391.6	406.1	420.6
30	435.1	449.6	464.1	478.6	493.1	507.6	522.1	536.6	551.1	565.6
40	580.1	594.6	609.1	623.6	638.1	652.6	667.1	681.6	696.1	710.6
50	725.1	739.6	754.1	768.6	783.2	797.7	812.2	826.7	841.2	855.7
60	870.2	884.7	899.2	913.7	928.2	942.7	957.2	971.7	986.2	1000.7
70	1015.2	1029.7	1044.2	1058.7	1073.2	1087.7	1102.2	1116.7	1131.2	1145.7
80	1160.2	1174.7	1189.2	1203.7	1218.2	1232.7	1247.2	1261.8	1276.3	1290.8
90	1305.3	1319.8	1334.3	1348.8	1363.3	1377.8	1392.3	1406.8	1421.3	1435.8
100	1450.3	1464.8	1479.3	1493.8	1508.3	1522.8	1537.3	1551.8	1566.3	1580.8
110	1595.3	1609.8	1624.3	1638.8	1653.3	1667.8	1682.3	1696.8	1711.3	1725.8
120	1740.4	1754.9	1769.4	1783.9	1798.4	1812.9	1827.4	1841.9	1856.4	1870.8
130	1885.4	1899.9	1914.4	1928.9	1943.4	1957.9	1972.4	1986.9	2001.4	2015.9
140	2030.4	2044.9	2059.4	2073.9	2088.4	2102.9	1217.4	2131.9	2146.4	2160.9
150	2175.4	2189.9	2204.4	2218.9	2233.5	2248.0	2262.5	2277.0	2291.5	2306.0
160	2320.5	2335.0	2349.5	2364.0	2378.5	2393.0	2407.5	2422.0	2436.5	2451.0
170	2465.5	2480.0	2494.5	2509.0	2523.5	2538.0	2552.5	2567.0	2581.5	2596.0
180	2610.5	2625.0	2639.5	2654.0	2668.5	2683.0	2697.7	2712.1	2726.6	2641.1
190	2755.6	2770.0	2784.6	2799.1	2813.6	2828.1	2842.6	2857.1	2871.6	2886.1
200	2900.6	2915.1	2929.6	2944.1	2958.6	2973.1	2987.6	3002.1	3016.6	3031.1
210	3045.6	3060.1	3074.6	3089.1	3103.6	3118.1	3132.6	3147.1	3161.6	3176.1
220	3190.7	3205.2	3219.7	3234.2	3248.7	3263.2	3277.7	3192.2	3306.7	3321.2
230	3335.7	3350.2	3364.7	3379.2	3393.7	3408.2	3422.7	3437.2	3451.7	3466.2
240	3480.7	3495.2	3509.7	3524.2	3538.7	3553.2	3567.7	3582.2	3596.7	3611.2

Temperature

Fahrenheit-Centigrade conversion; a simple way to convert a Fahrenheit temperature reading into a Centigrade temperature reading or vice versa is to enter the accompanying table in the center or boldface column of figures.

These figures refer to the temperature in either Fahrenheit or Centigrade degrees.

If it is desired to convert from Fahrenheit to Centigrade degrees, consider the center column as a table of Fahrenheit temperatures and read the corresponding Centigrade temperature in the column at the left.

If it is desired to convert from Centigrade to Fahrenheit degrees, consider the center column as a table of Centigrade values and read the corresponding Fahrenheit temperature on the right.

1 °C = 33.8°F

°C		°F	°C		°F	°C		°F	°C		°F
–40.4	–40	–40.0	–11.7	11	51.8	7.8	46	144.8	27.2	81	117.8
–37.2	–35	–31.0	–11.1	12	53.6	8.3	47	116.6	27.8	82	179.6
–34.4	–30	–22.0	–10.6	13	55.4	8.9	48	118.4	28.3	83	181.4
–31.7	–25	–13.0	–10.0	14	57.2	9.4	49	120.2	28.9	84	183.2
–28.9	–20	–4.0	–9.4	15	59.0	10.0	50	122.0	29.4	85	185.0
–28.3	–19	–2.2	–8.9	16	60.8	10.6	51	123.8	30.0	86	186.8
–27.8	–18	–0.4	–8.3	17	62.6	11.1	52	125.6	30.6	87	188.6
–27.2	–17	1.4	–7.8	18	64.4	11.7	53	127.4	31.1	88	190.4
–26.7	–16	3.2	–7.2	19	66.2	12.2	54	129.2	31.7	89	192.2
–26.1	–15	5.0	–6.7	20	68.0	12.8	55	131.0	32.2	90	194.0
–25.6	–14	6.8	–6.1	21	69.8	13.3	56	132.8	32.8	91	195.8
–25.0	–13	8.6	–5.6	22	71.6	13.9	57	134.6	33.3	92	197.6
–24.4	–12	10.4	–5.0	23	73.4	14.4	58	136.4	33.9	93	199.4
–23.9	–11	12.2	–4.4	24	75.2	15.0	59	138.2	34.4	94	201.2
–23.3	–10	14.0	–3.9	25	77.0	15.6	60	140.0	35.0	95	203.0
–22.8	–9	15.8	–3.3	26	78.8	16.1	61	141.8	35.6	96	204.8
–22.2	–8	17.6	–2.8	27	80.6	16.7	62	143.6	36.1	97	206.6
–21.7	–7	19.4	–2.2	28	72.4	17.2	63	145.4	36.7	98	208.4
–21.1	–6	21.2	–1.7	29	84.2	17.8	64	147.2	37.2	99	210.2
–20.6	–5	23.0	–1.1	30	86.0	18.3	65	149.0	37.8	100	212.0
–20.0	–4	24.8	–0.6	31	87.8	18.9	66	150.8	40.6	105	221.0
–19.4	–3	26.6	0.0	32	89.6	19.4	67	152.6	43.3	110	230.0
–18.9	–2	28.4	0.6	33	91.4	20.0	68	154.4	46.1	115	239.0
–18.3	–1	30.2	1.1	34	93.2	20.6	69	156.2	48.9	120	248.0
–17.8	0	32.0	1.7	35	95.0	21.1	70	158.0	51.7	125	257.0
–17.2	1	33.8	2.2	36	96.8	21.7	71	159.8	54.4	130	266.0
–16.7	2	35.6	2.8	37	98.6	22.2	72	161.6	57.2	135	275.0
–16.1	3	37.4	3.3	38	100.4	22.8	73	163.4	60.0	140	284.0
–15.6	4	39.2	3.9	39	102.2	23.3	74	165.2	62.7	145	2930
–15.0	5	41.0	4.4	40	104.0	23.9	75	167.0	65.6	150	302.0
–14.4	6	42.8	5.0	41	105.8	24.4	76	168.8	68.3	155	311.0
–13.9	7	44.6	5.6	42	107.6	25.0	77	170.6	71.1	160	320.0
–13.3	8	46.4	6.1	43	109.4	25.6	78	172.4	73.9	165	329.0
–12.8	9	48.2	6.7	44	111.2	26.1	79	174.2	76.7	170	338.0
–12.2	10	50.0	7.2	45	113.0	26.7	80	176.0	79.4	175	347.0

7. STRUCTURE AND FUNCTION

7.1.Engine and Transmission Coupling

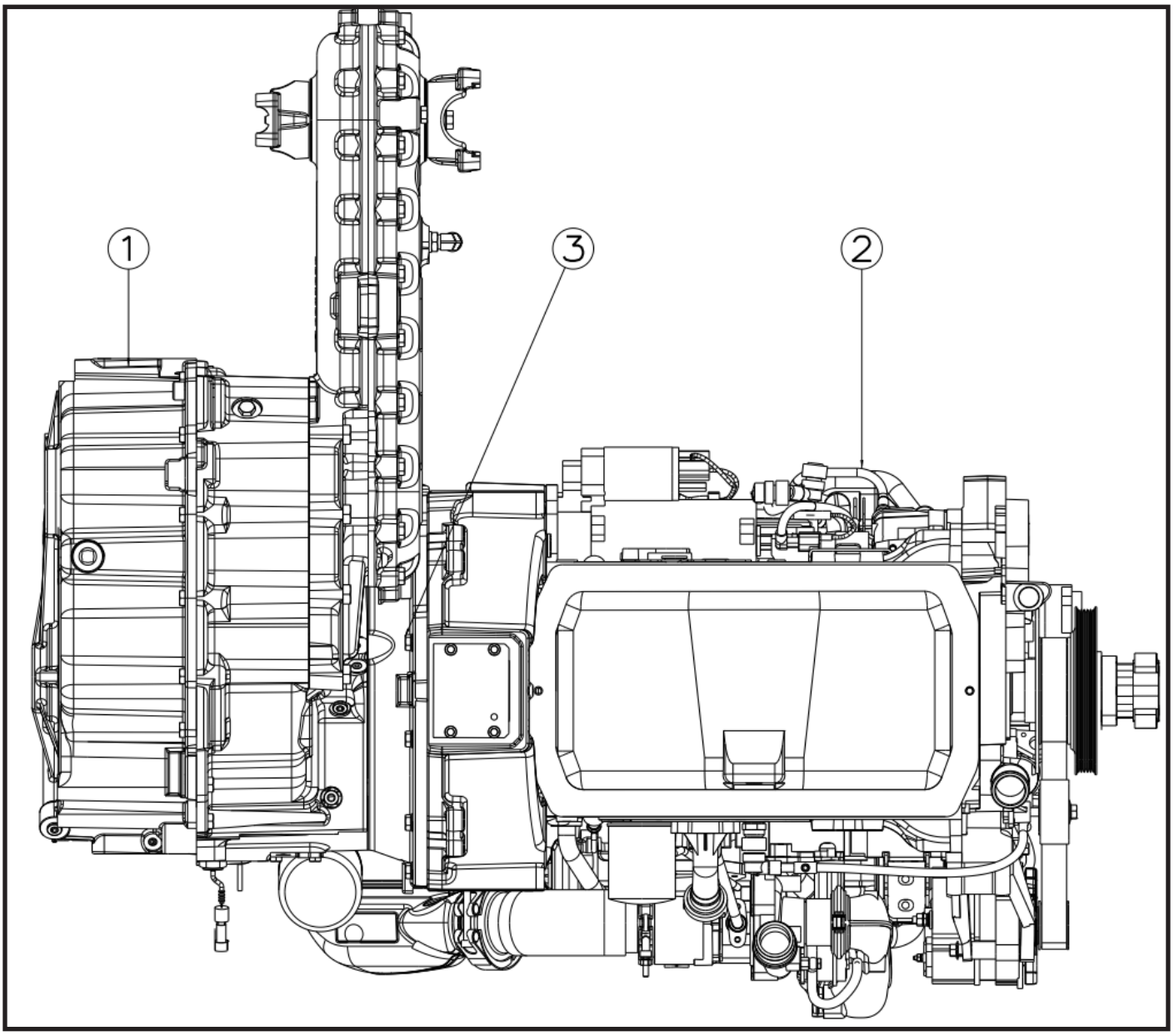

1. Transmission	2. Engine	3. Bolts

Engine Description

The DEUTZ TCD 3.6 L4 engine is one of the modern diesel engines produced by DEUTZ AG. This motor is specifically designed for applications in agriculture and construction machinery.

- **Engine Type**: Four-cylinder, in-line engine
- **Fuel Type**: Diesel
- **Cylinder Volume**: 0.95 gal. (3.6 Liter)
- **Power Output**: 55 kW (74 HP) – 130 kW (174 HP)
- **Emission Standards**: This engine is designed to comply with emission standards and generally meets Tier 4 Final / Stage IV emission standards.

WORKING PRINCIPLE

THE DEUTZ TCD 3.6 L4 engine follows the typical operating principles of a four-stroke internal combustion diesel engine;

- **Suction Time:**

As the piston moves downward, fresh air is drawn into the cylinder. The turbocharger increases the pressure of the intake air, allowing more air intake.

- **Compression Time:**

The piston moves upwards and compresses the air. The compression ratio is high, which increases the temperature of the air.

- **Combustion Time:**

At the end of the compression time, diesel fuel is fired into the cylinder under high pressure by the fuel injection system. The fuel mixed with hot air ignites spontaneously and combustion occurs. This combustion pushes the piston downward and generates energy.

- **Exhaust Time:**

As the piston moves upwards again, it expels the burnt gases through the exhaust valve. These burnt gases exit the exhaust system and are cleaned.

PROPERTIES OF ENGINE

High Efficiency: Provides low fuel consumption and high performance.

Durability and Safety: Delivers reliable performance even in harsh operating conditions.

Easy Maintenance: Its design makes maintenance and servicing easy.

Emission Control: It is environmentally friendly thanks to its advanced emission control systems.

7.2. Power Train

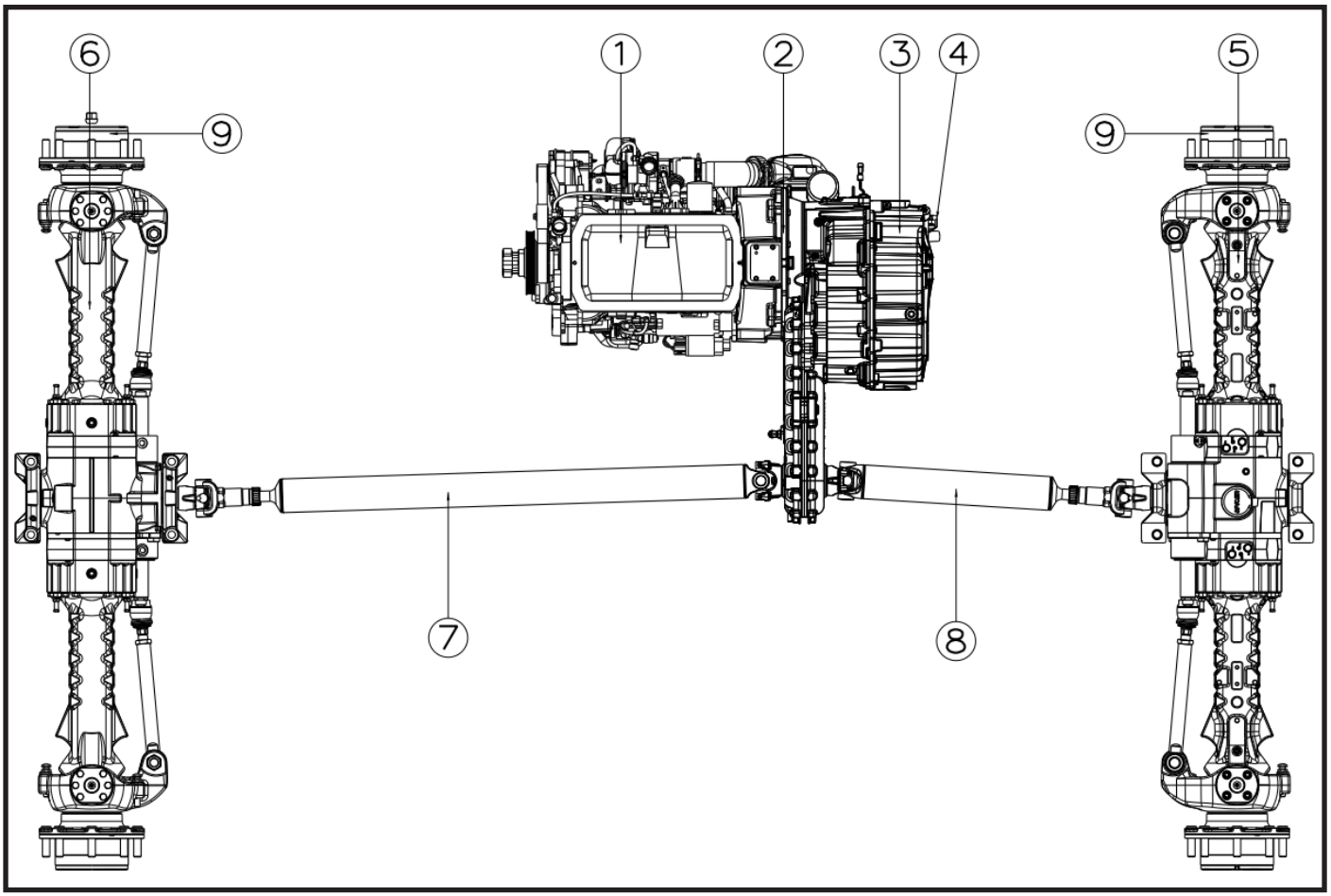

1. Engine	4. Hydraulic Pump	7. Drive Shaft
2. Converter	5. Front Axle	8. Drive Shaft
3. Transmission	6. Rear Axle	9. Final Drive

Description

The driving power generated by the engine (**1**) is transmitted through the flywheel to the converter (**2**). The converter uses hydraulic oil to convert the torque transmitted by the engine (**1**) into driving power. The converter (**2**) transmits motion to the drive shaft of the transmission (**3**) and to the drive shaft of the hydraulic pump (**4**).

The transmission (**3**) has two hydraulically-activated clutches that can be selected by an electrically-controlled gear selector.

The driving power is transmitted from the transmission flanges (**3**) to the front (**5**) and rear (**6**) axles through the cardan drive shafts (**7** and **8**).

The driving power transmitted to the front (**5**) and rear (**6**) axles is reduced by the differentials and then transmitted to the final drives (**9**) through the drive shaft.

7.3.Transmission

The transmission is a component that transmits the power from the engine to the wheels with an assigned transmission ratio.

The CARRARO TCH90 PS gearbox is an advanced hydraulic gearbox used especially in agricultural and construction machinery.

These types of transmissions are designed to provide both performance and efficiency.

Properties

Type	Hydraulic transmission.
Power Transmission	Provides powerful and continuously variable power transmission.
Control System	Usually equipped with electronic control systems.
Efficiency	Provides high efficiency and fuel economy.
Torque Capacity	It has a high torque capacity, which allows heavy loads to be easily transported.
Durability	Designed to withstand harsh operating conditions.
Precise Control	Allows precise control of speed and torque.

Working Principle

The CARRARO TCH90 PS gearbox is based on hydrostatic principles. Hydrostatic transmissions are a system that operates under the pressure of hydraulic fluid and works as follows;

1. Pump

At the heart of the hydrostatic system is a variable displacement pump. This pump converts engine power into hydraulic energy. The pump pumps hydraulic fluid into the system under high pressure.

2. Hydraulic Motor

The hydraulic fluid pressurized by the pump is directed to a hydraulic motor with variable displacement. This motor converts hydraulic energy back into mechanical energy and transmits it to vehicle wheels or other moving components.

3. Control Valves

The flow and pressure control valves in the hydrostatic system regulate the direction and pressure of the fluid. This allows to precisely control the speed and torque of the system.

4. Cooling System

Hydrostatic transmissions have a cooling system to regulate the temperature of the hydraulic fluid, as they operate under constant high pressure. This ensures that the system operates efficiently and reliably.

Advantages

Continuously Variable Speed: Hydrostatic transmissions provide seamless speed variation over a wide range of speeds.

High Torque: Produces high torque even at low speeds, which makes it possible to handle heavy loads and difficult off-road conditions.

Precise Control: Precise speed and torque control allows operators to do their jobs more efficiently and precisely.

Durability and Reliability: Offers long life and reliable performance in harsh operating conditions.

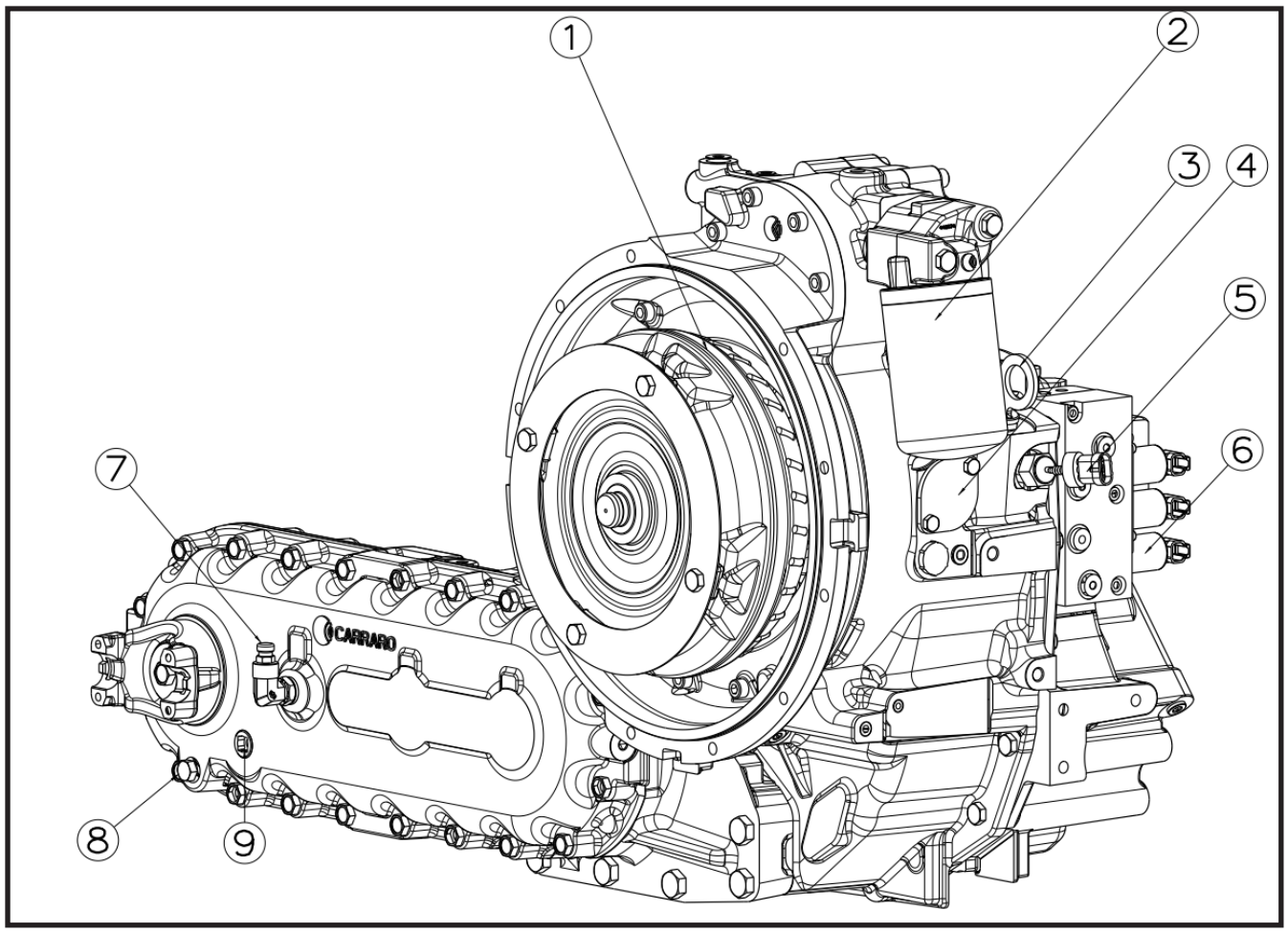
1
2
3
4
5
6
7
8
9
CARRARO

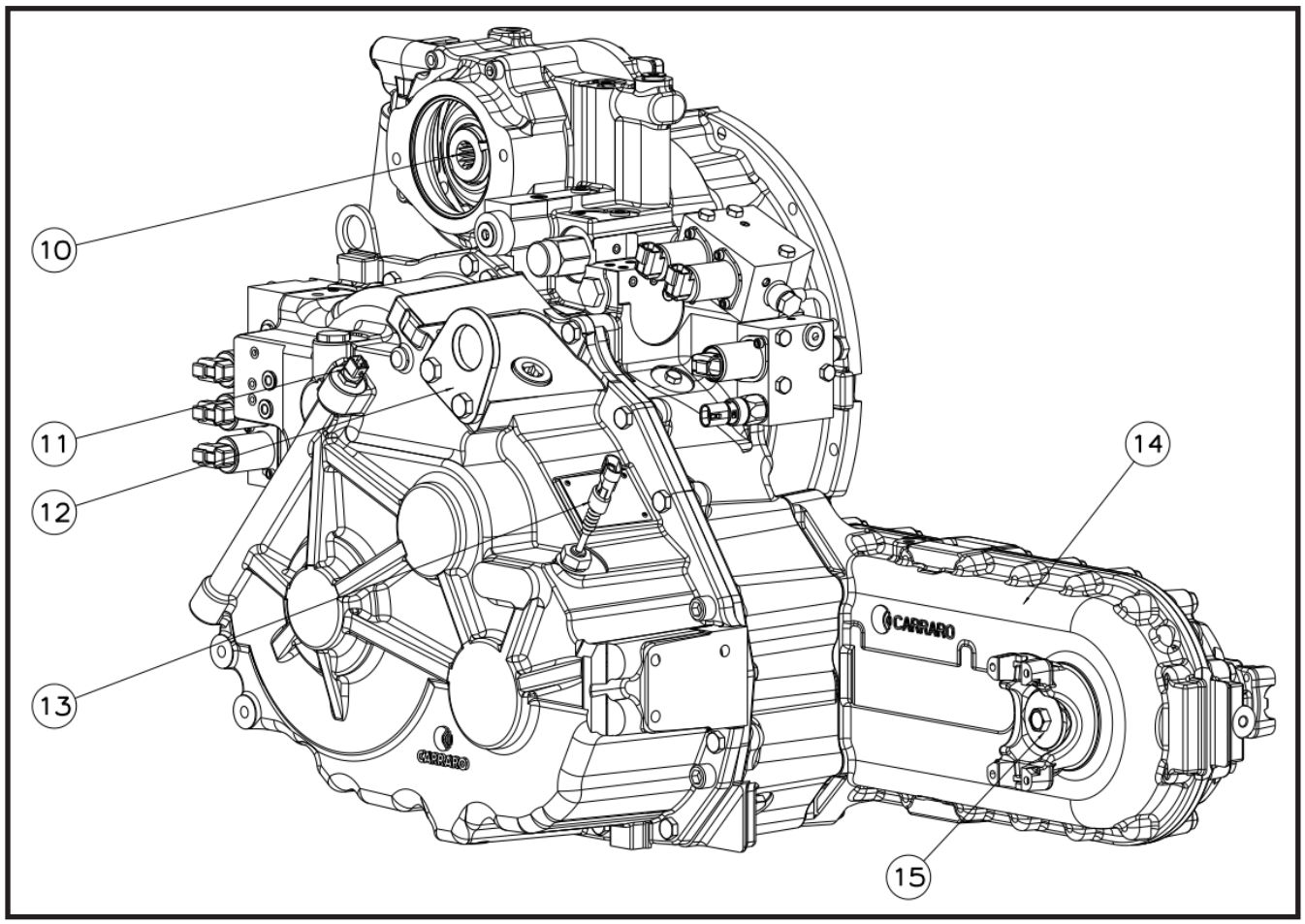
10
11
12
13
14
15
CARRARO
CARRARO

1. Torque Converter	2. Oil Filter	3. Oil Level Dipstick
4. Filter	5. Hall Effect Speed Sensor	6. Hydraulic Control Block
7. Breather	8. Oil Outlet Port/Plug	9. Oil Inlet and Level Port/ Plug
10. Hydraulic Pump	11. Temperature Sensor	12. Bracket
13. Hall Effect Speed Sensor	14. Transfer Box	15. End Yoke Flange

1. Torque Converter

It is a hydrodynamic component used to transfer engine power to the transmission and increase torque. The Torque converter provides a connection between the engine and the gearbox and transmits the engine's power to the wheels smoothly and efficiently.

Properties and Working Principle

Torque Boost	By increasing the torque of the engine, it provides higher traction at low speeds.
Permanent Connection	It provides a continuous connection between the engine and transmission, which allows the engine to run even when the vehicle is stationary.
Fluid Clutch	Because it is a fluid-filled component, it provides a soft grip during power transmission and reduces wear on transmission components.

Working Principle

The torque converter consists of three main components; pump, turbine and stator. These components work together based on hydrodynamic principles.

- **Pump**

The pump, which is connected to the engine side of the torque converter, picks up the rotational motion of the motor and ejects the fluid (usually transmission oil) contained in it outward. The movement of this fluid is directed towards the turbine.

- **Turbine**

The turbine picks up the liquid ejected by the pump and begins to rotate itself. The rotational motion of the turbine is transmitted to the input shaft of the gearbox and thus the vehicle moves.

- **Stator**

A stator is a fixed component placed between the pump and the turbine. By changing the direction of the fluid, it allows the fluid from the pump to reach the turbine more efficiently. At the same time, it uses the power of the engine more effectively by increasing torque at low speeds.

Working Phases

- **Initial State (Low Speed)**

When the vehicle is stationary or running at low speeds, the stator changes the direction of the fluid and maximizes the power of the motor by increasing the torque. This provides higher traction during vehicle starts and at low speeds.

- **Medium Speed**

As the vehicle accelerates, the pump and turbine begin to rotate at similar speeds. In this case, the torque converter does not create a torque increase effect and only provides power transmission.

- **High Speed**

When the vehicle reaches high speeds, the pump and turbine rotate at almost the same speed. In this case, the torque converter simply provides a connection between the engine and the gearbox and efficiently maintains the power transmission.

2. Oil Filter

An oil filter is a component used to ensure the cleanliness of transmission oil. This filter traps metal particles, dirt, and other impurities in the transmission system, allowing the oil to circulate cleanly and efficiently. This ensures the longevity of the transmission components and the maintenance of their performance.

3. Oil Level Dipstick

It is a tool used to check the level of transmission fluid. This rod is a component that needs to be checked regularly to ensure that the transmission system is operating with the correct amount of oil.

4. Filter

A filter is a component that allows the fluid in the gearbox to be cleaned. The main functions of the gearbox filter are the following;

- **Dirt and Particle Retention**: The transmission filter captures metal chips, dirt, and other impurities in the liquid. These particles can cause wear and damage inside the transmission.
- **Ensuring Fluid Flow**: The filter ensures that the cleaned fluid flows smoothly into the transmission system. This is necessary for lubrication and cooling of the components of the gearbox.
- **Performance and Efficiency**: A clean transmission fluid allows the transmission to run more efficiently and provide smoother gear changes. In addition, it reduces the wear and tear of transmission components.
- **Preventing Failure and Damage**: A dirty or clogged filter can prevent transmission fluid from flowing adequately, which can cause the transmission to overheat or malfunction. Regular replacement of the filter avoids such problems.

The transmission filter is usually checked during the transmission fluid change and replaced if necessary. This is an important maintenance operation to extend the life of the transmission and ensure a smooth ride.

5. Hall Effect Speed Sensor

It is a sensor used to measure the speed of the vehicle. The hall effect principle involves converting magnetic field changes into electrical signals. This sensor works in conjunction with a magnet or magnetic disc placed on the output shaft of the transmission.

The sensor detects magnetic field changes and transmits these changes as electrical pulses. As the transmission shaft rotates, the magnetic field changes and the sensor detects these changes. The electrical pulses are sent to the vehicle control unit (ECU) to calculate the vehicle's speed. This data is used for the operation of the speedometer and the correct operation of various electronic control systems.

6. Hydraulic Control Block

The hydraulic block directs and controls the hydraulic fluid to ensure the proper operation of the transmission. The hydraulic block has the following functions;

- **Gear Shift**: The hydraulic block directs the hydraulic fluid to determine which gear the transmission will be in. This allows the gears to change automatically and smoothly.
- **Pressure Control**: The hydraulic block regulates the pressure inside the gearbox, ensuring the correct functioning of the components. This is critical for the transmission to operate efficiently and have a long life.
- **Valves**: There are various valves within the hydraulic block. These valves ensure that the hydraulic fluid is directed to the correct channels and control different transmission functions.

7. Breather

It is a component used to maintain pressure balance inside the gearbox and prevent excessive pressure build-up. Its functions are;

- **Pressure Balancing**: It allows air to enter and exit to compensate for pressure changes due to heat during the operation of the transmission. This ensures that the pressure inside the transmission is in line with atmospheric pressure.
- **Fluid Leakage Prevention**: When excessive pressure builds, this pressure can cause leaks. The breather prevents leaks by relieving this pressure.
- **Dust and Water Ingress Prevention**: The breather ensures that the incoming air is clean and at the same time prevents dust, dirt and water from entering the transmission. This ensures that the internal components of the transmission remain clean and functioning properly.
- **Lubrication and Cooling**: Maintaining pressure balance ensures that the transmission oil circulates correctly and that the components are effectively lubricated and cooled.

8. Oil Outlet Port/Plug

It is a component used to drain transmission fluid. This port/plug makes it easy to access when the transmission oil needs to be changed or drained. Correctly removing and installing the oil drain plug during an oil change is important for the proper functioning of the transmission and the prevention of leaks.

9. Oil Inlet and Level Port/Plug

This port is used to add oil to the transmission. A correct and adequate oil level is critical for the proper operation of the transmission and the prevention of wear.

10. Transmission Hydraulic Pump

Refer to Section Hydraulic Pump

11. Temperature Sensor

It is used to monitor and control transmission oil temperature. It is a critical component to ensure that the transmission operates long-lasting and reliably. This sensor is used in the transmission system for the following purposes;

- **Heat Monitoring**: Prevents the transmission from overheating by constantly monitoring the transmission oil temperature. Overheating can reduce the viscosity of the transmission fluid and cause wear on the transmission components.
- **Protection**: If the transmission oil goes outside the specified temperature range, the temperature sensor detects this and sends a signal to the vehicle's control system. This can allow the transmission or vehicle to go into protection mode, thus preventing potential damage.
- **Efficiency and Performance**: The transmission oil temperature must be maintained within a certain range for the transmission to operate efficiently. The temperature sensor helps maintain this range.
- **Providing Information**: The data from the temperature sensor provides the vehicle operator or maintenance technician with information about the health status of the transmission system. This data helps to create maintenance plans and identify potential problems in advance.

12. Bracket

It is used for transporting the transmission. During assembly or disassembly, the transmission is transported by using this bracket.

13. Transfer Box

It is a component that distributes engine torque to the front and rear axles. The transfer box takes the power from the transmission and directs it to the different axles of the vehicle. Its functions are as follows;

- **Power Distribution**: The transfer box distributes power from the transmission to the front and rear axles. This is an important function, especially in all-wheel drive vehicles, as it allows power to be transmitted to both axles..
- **Gear Ratios:** Provide low gear ratios to provide extra traction when carrying heavy loads or in difficult terrain conditions. This increases engine torque, making the vehicle more effective in harsh conditions.
- **Two and Four Wheel Drive Options**: The Transfer Box allows the user to switch between two-wheel drive (2WD) or four-wheel drive (4WD) modes. This can be used depending on fuel economy and traction require

- ments.

14. End Yoke Flange

End Yoke Flange is a component that transmits power from the gearbox or transfer case to the drive shaft. This part plays a critical role in ensuring the connection between the various drivetrains. Below are its functions and features;

- **Connection Point**: The end yoke flange transmits the rotational motion from the gearbox to the drive shaft or other drivetrain. This ensures a secure and stable connection between the transmission and the drive shaft.
- **Power Transmission:** This flange is a fastener that transfers motor torque to the drive shaft. Correct alignment and connection ensure that power is transmitted efficiently.
- **Flexibility of Movement:** The end joint flange provides a certain flexibility when the drive shaft is moving. This ensures that the components work in harmony and are not damaged during the vehicle's suspension movements.
- **Assembly and Disassembly:** End Yoke Flange offers easy assembly and disassembly. Removing and reinstalling this part in maintenance and repair operations is usually simple.
- **Durability:** This component is often made of durable materials and is designed to withstand high torque and harsh operating conditions.

Schematic

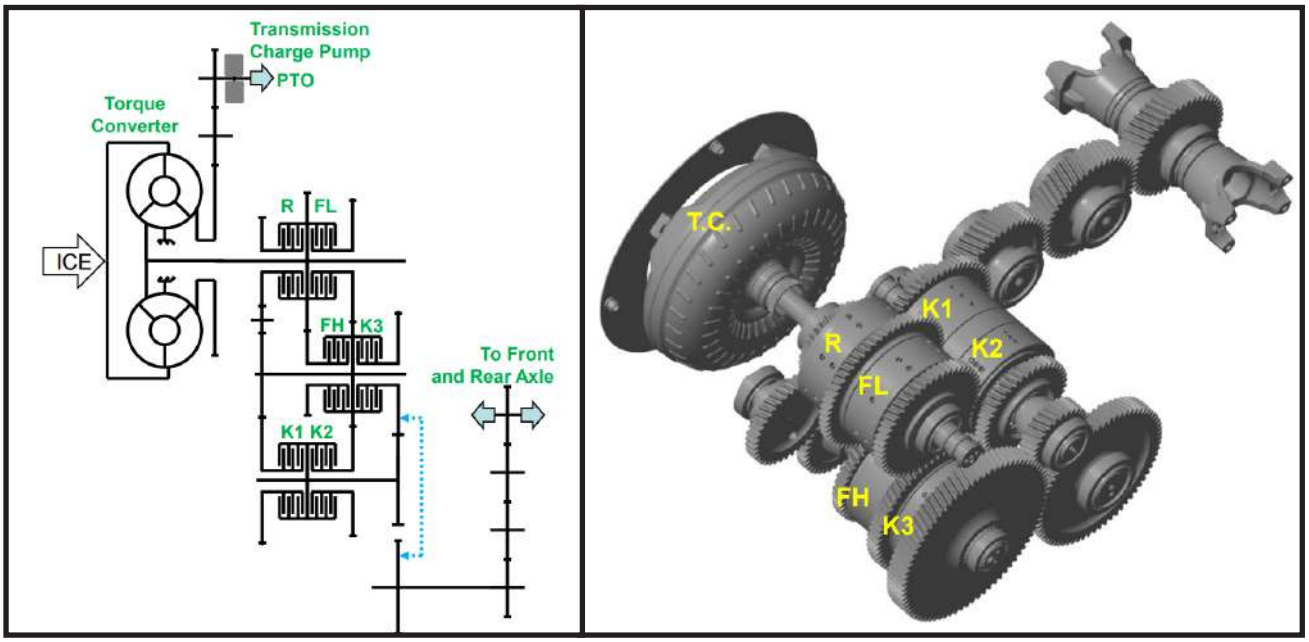

TCH90 SD RATIOS				
SPEED	**CLUTCHES**	**PS RATIOS**	**TB**	**PS+TB RATIOS**
F1	FL x K1	4.407	1.122	4.945
F2	FH x K1	3.122	1.122	3.502
F3	FH x K2	1.445	1.122	1.621
F4	FH x K3	0.732	1.122	0.821
R1	R x K1	4.429	1.122	4.969
R2	R x K2	2.050	1.122	2.300
R3	R x K3	1.038	1.122	1.165

POWER FLOW: F1 Speed Gear

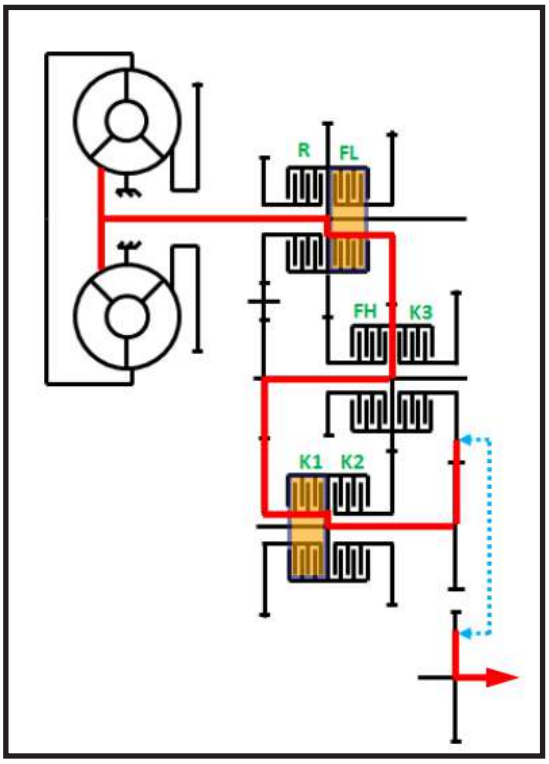

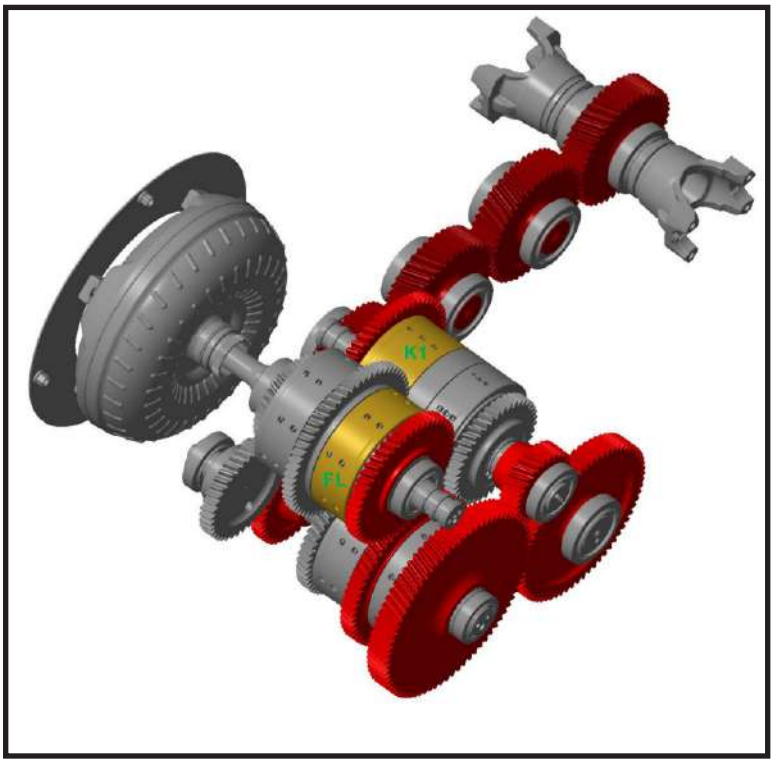

SPEED	CLUTCHES
F1	FL-K1
F2	FH-K1
F3	FH-K2
F4	FH-K3
R1	R-K1
R2	R-K2
R3	R-K3

POWER FLOW: F2 speed gear

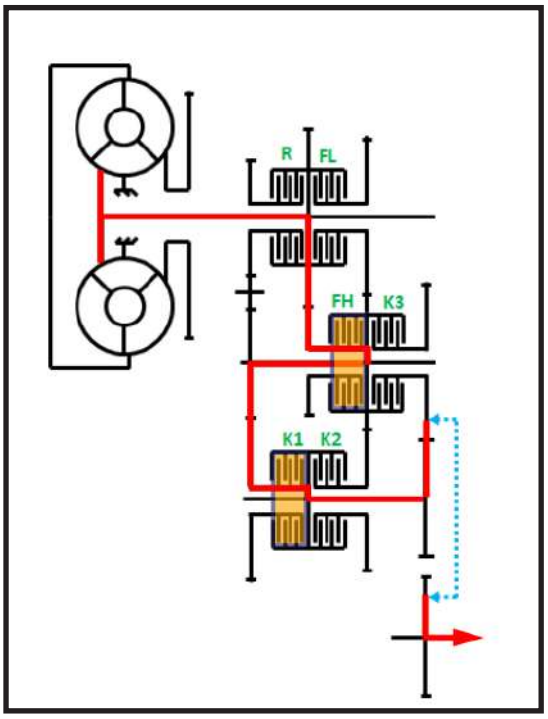

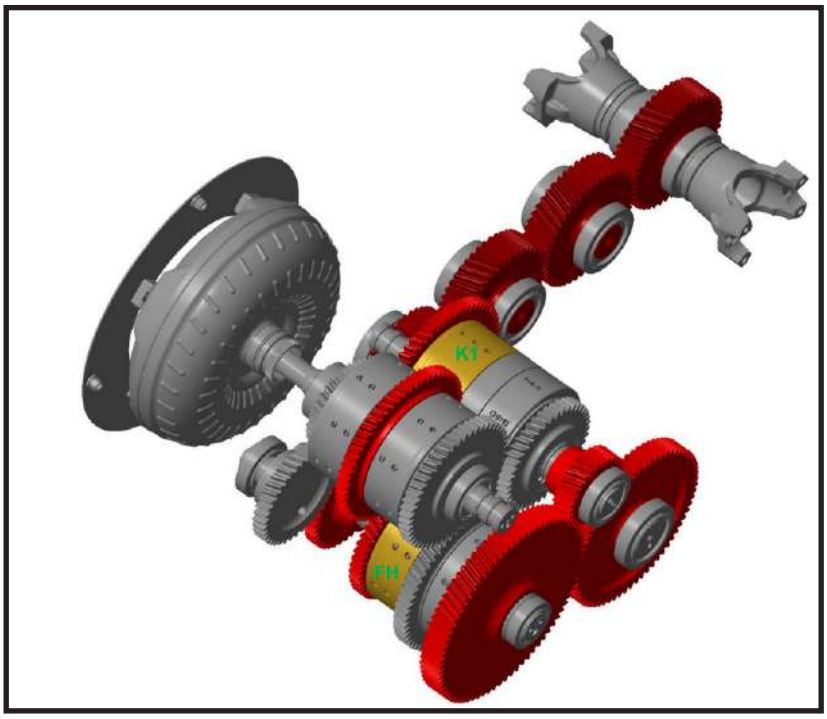

SPEED	CLUTCHES
F1	FL-K1
F2	FH-K1
F3	FH-K2
F4	FH-K3
R1	R-K1
R2	R-K2
R3	R-K3

POWER FLOW: F3 Speed Gear

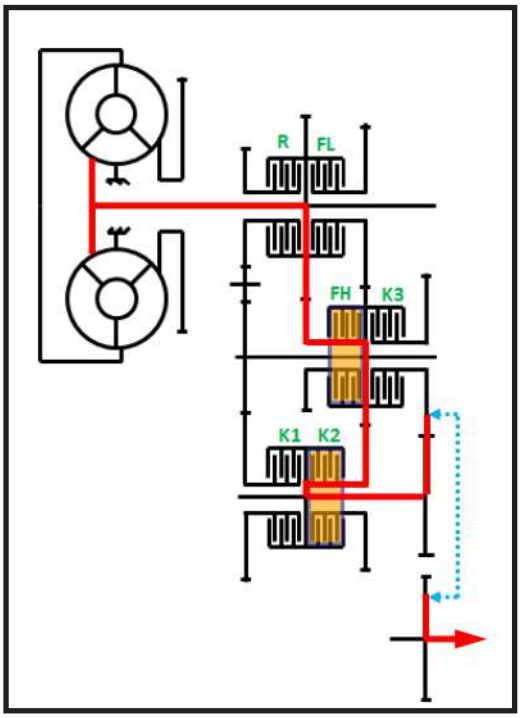

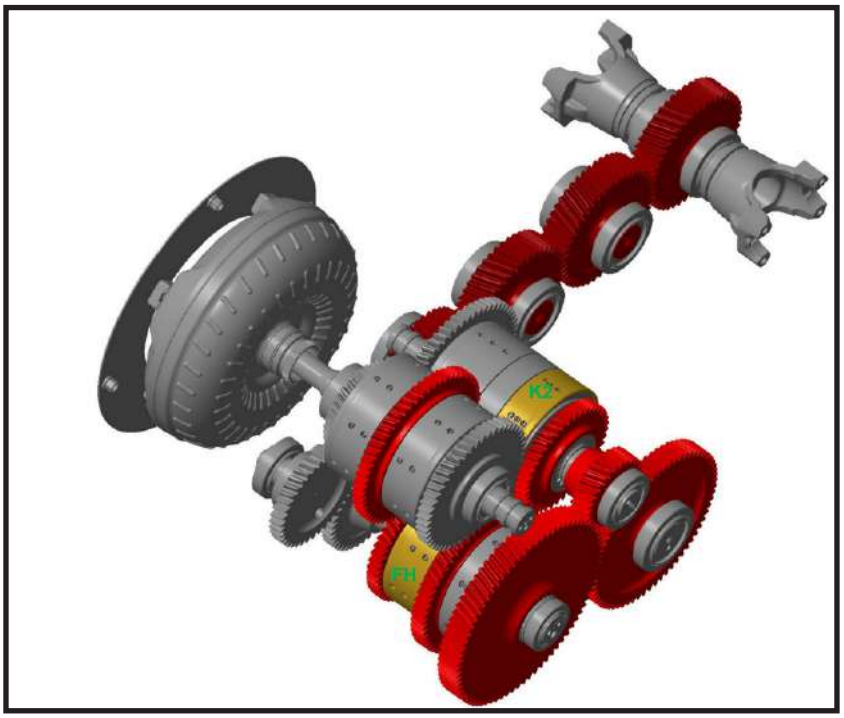

SPEED	CLUTCHES
F1	FL-K1
F2	FH-K1
F3	FH-K2
F4	FH-K3
R1	R-K1
R2	R-K2
R3	R-K3

POWER FLOW: F4 Speed Gear

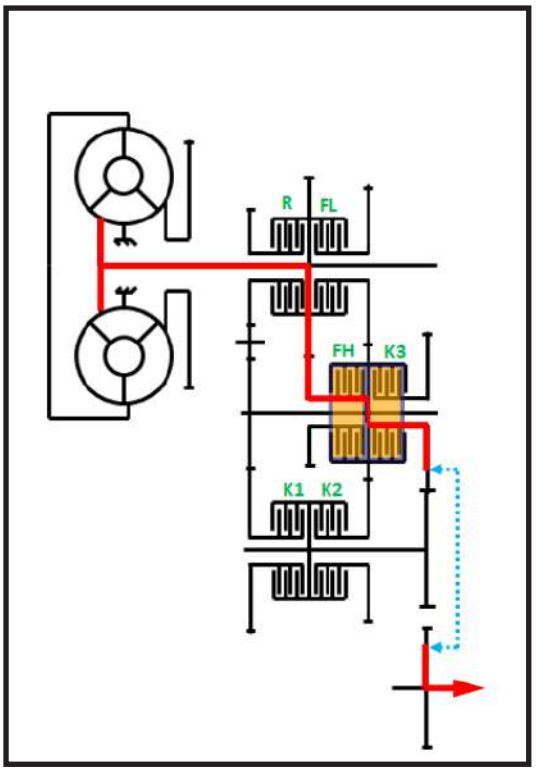

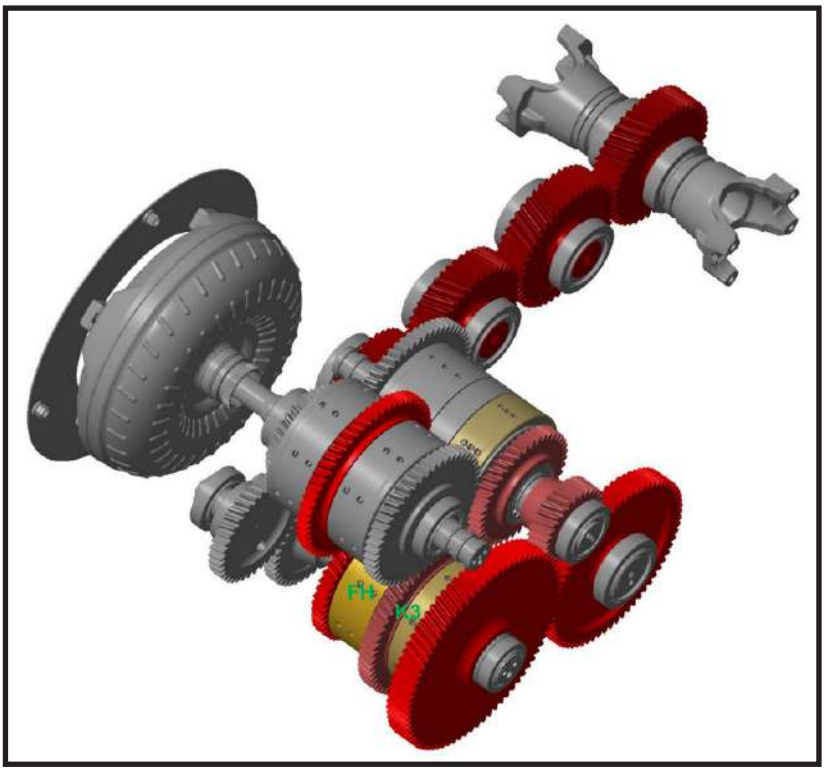

SPEED	CLUTCHES
F1	FL-K1
F2	FH-K1
F3	FH-K2
F4	FH-K3
R1	R-K1
R2	R-K2
R3	R-K3

POWER FLOW: R1 Speed Gear

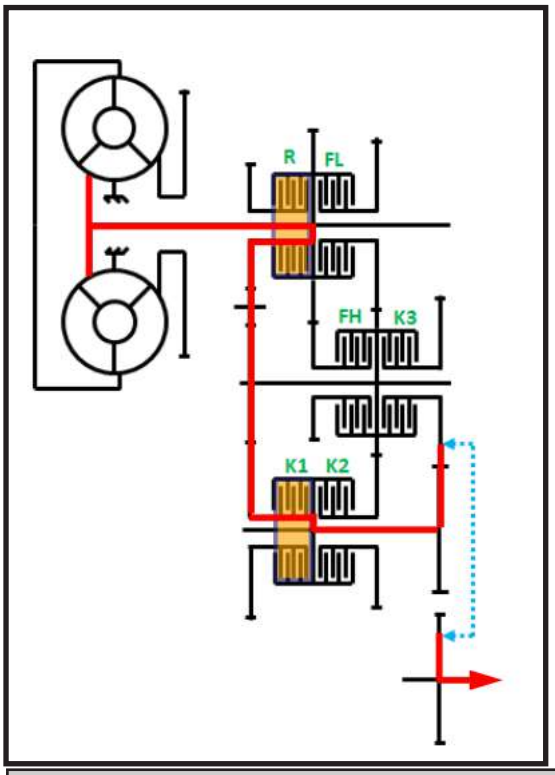

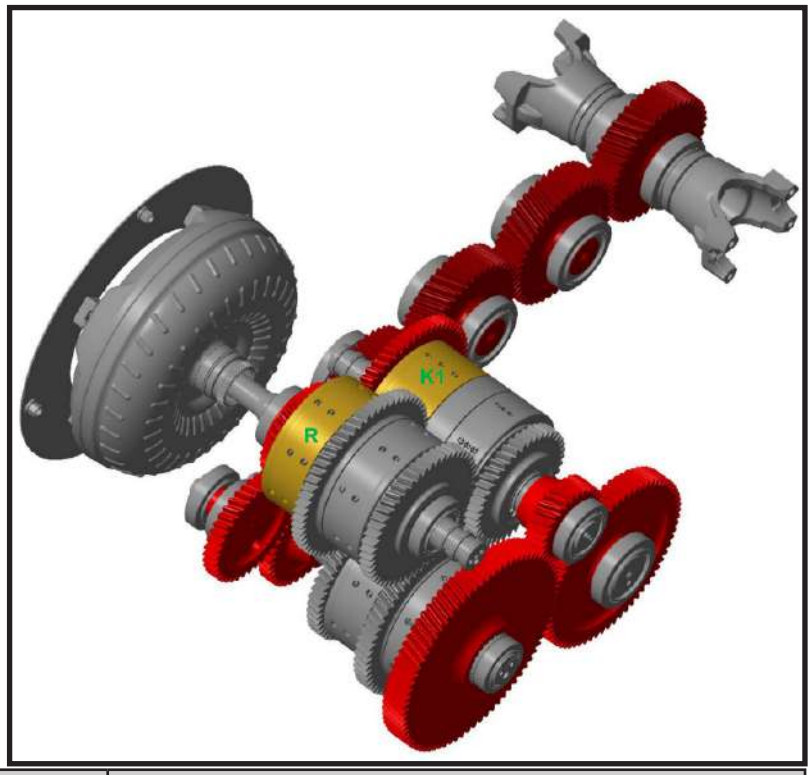

SPEED	CLUTCHES
F1	FL-K1
F2	FH-K1
F3	FH-K2
F4	FH-K3
R1	R-K1
R2	R-K2
R3	R-K3

POWER FLOW: R2 Speed Gear

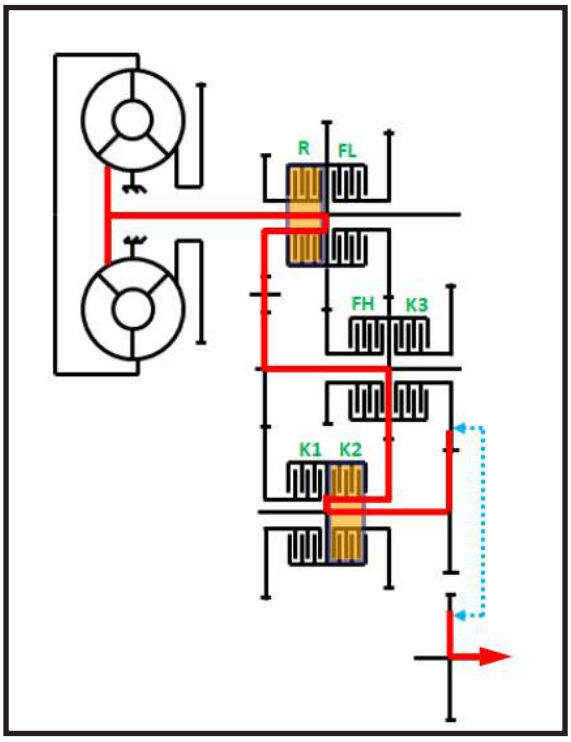

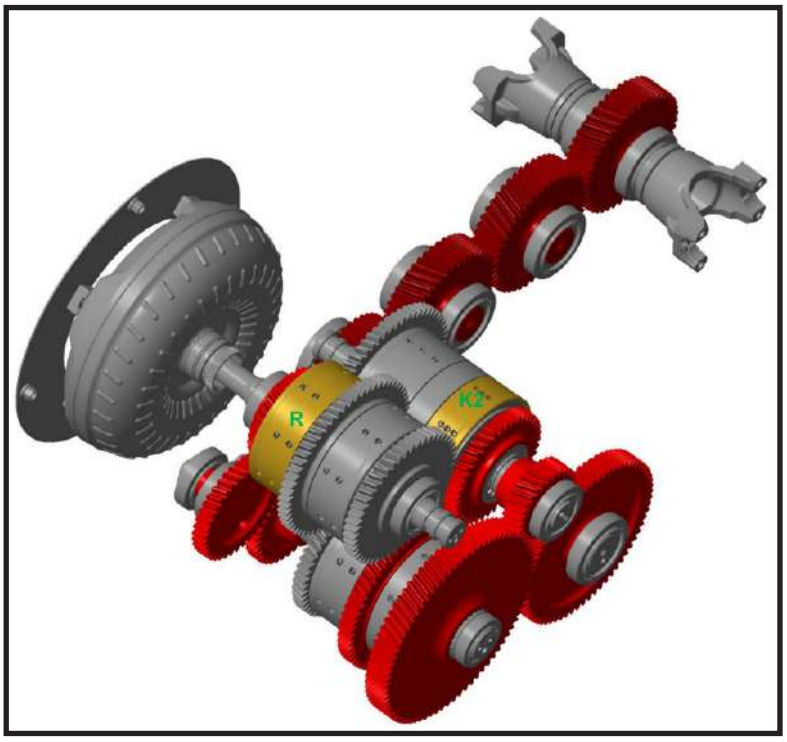

,

SPEED	CLUTCHES
F1	FL-K1
F2	FH-K1
F3	FH-K2
F4	FH-K3
R1	R-K1
R2	R-K2
R3	R-K3

POWER FLOW: R3 Speed Gear

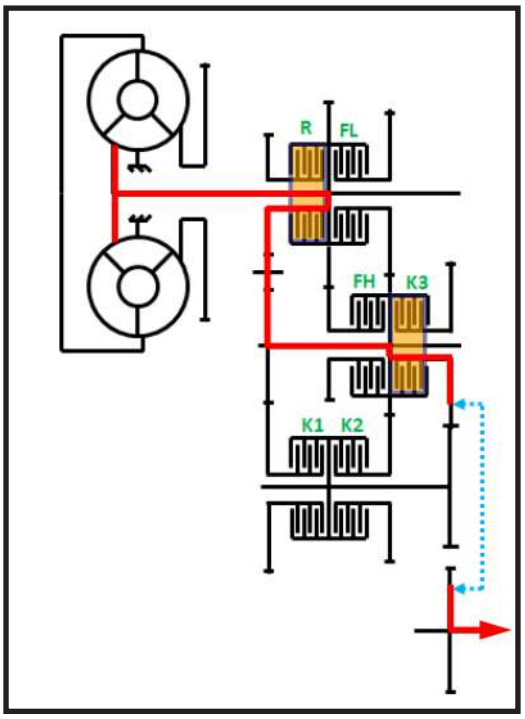

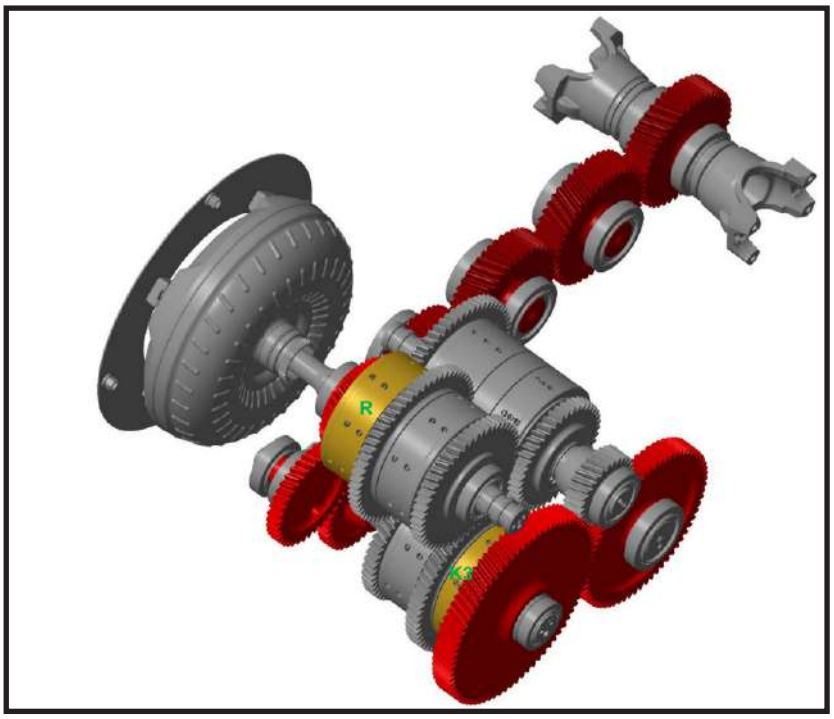

SPEED	CLUTCHES
F1	FL-K1
F2	FH-K1
F3	FH-K2
F4	FH-K3
R1	R-K1
R2	R-K2
R3	R-K3

Hydraulic Schematic

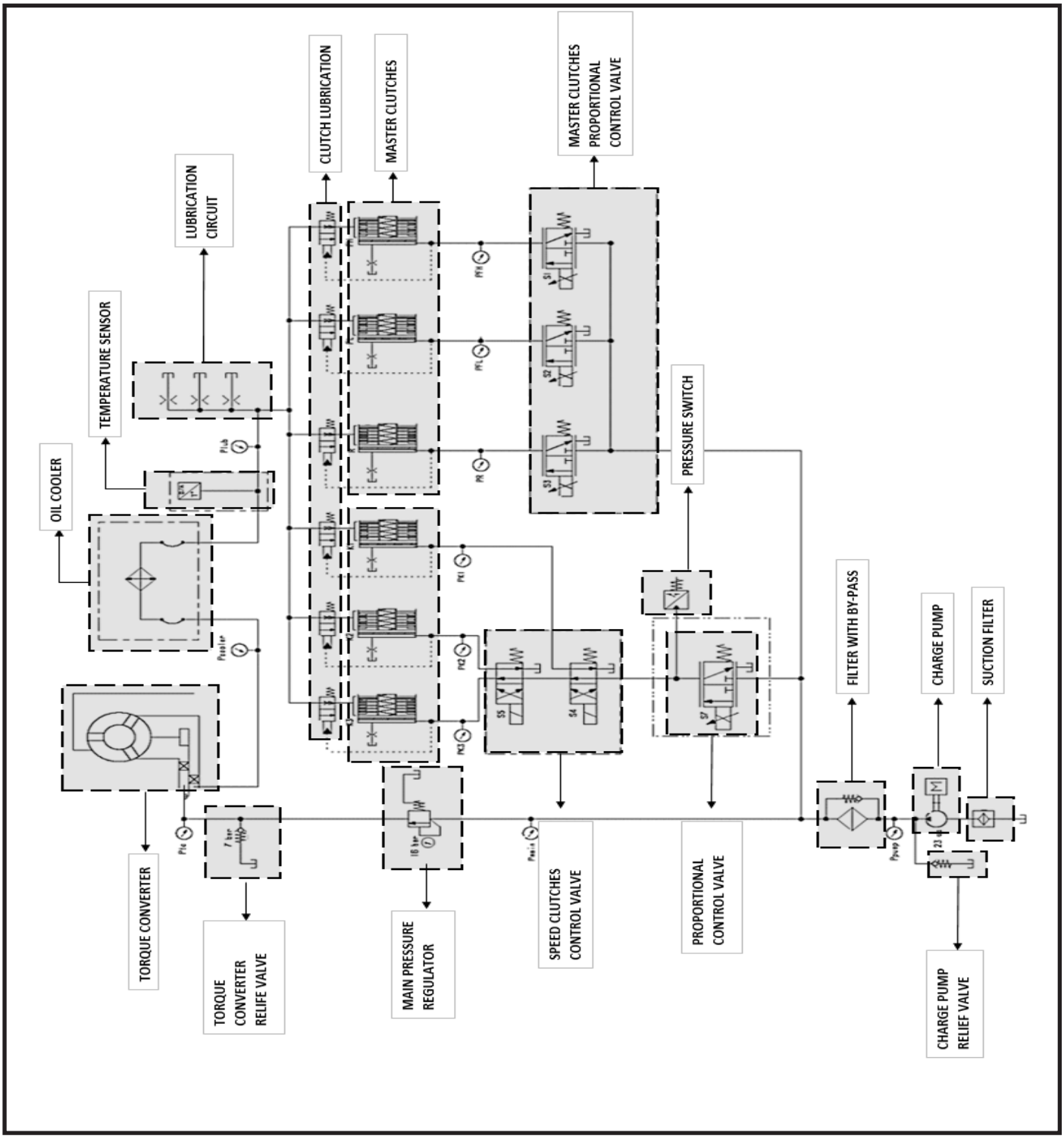

Hydraulic Schematic – Item and Description

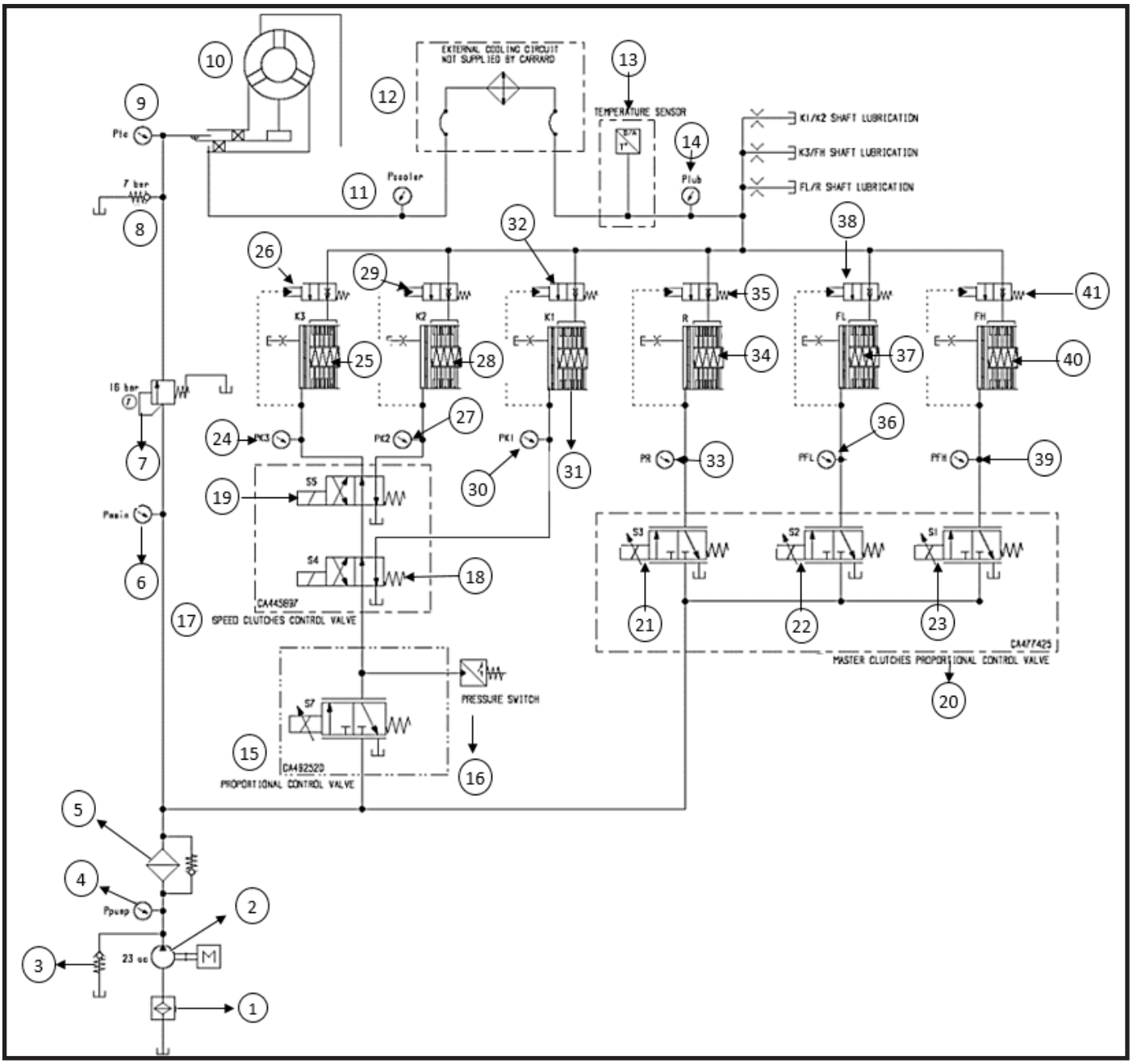

1	Suction Filter	22	FWD Low Clutch Proportional Valve
2	Charge Pump	23	FWD High Clutch Proportional Valve
3	Charge Pump Relief Valve	24	K3 Clutch Pressure Check Port
4	Pump Pressure Check Port	25	K3 Clutch Piston
5	Filter With By-Pass	26	K3 Clutch Lubrication Bush
6	Main Pressure Check Port	27	K2 Clutch Pressure Check Port
7	Main Pressure Regulator	28	K2 Clutch Piston
8	Torque Converter Relief Valve	29	K2 Clutch Lubrication Bush
9	Torque Converter Pressure Check Port	30	K1 Clutch Pressure Check Port
10	Torque Converter	31	K1 Clutch Piston
11	Cooler Pressure Check Port	32	K1 Clutch Lubrication Bush
12	Cooling System	33	REC Clutch Pressure Check Port
13	Temperature Sensor	34	REV Clutch Piston
14	Lubrication Pressure Check Port	35	REV Clutch Lubrication Bush
15	Proportional Control Valve	36	FWD Low Clutch Pressure Check Port
16	Pressure Switch	37	FWD Low Clutch Piston
17	Speed Clutches Control Valve	38	FWD Low Clutch Lubrication Bush
18	Solenoid Valve	39	FWD High Clutch Pressure Check Port
19	Solenoid Valve	40	FWD High Clutch Piston
20	Master Clutches Proportional Control Valve	41	FWD High Clutch Lubrication Bush
21	REV Clutch Proportional Valve		

Transmission Pressure Check Ports

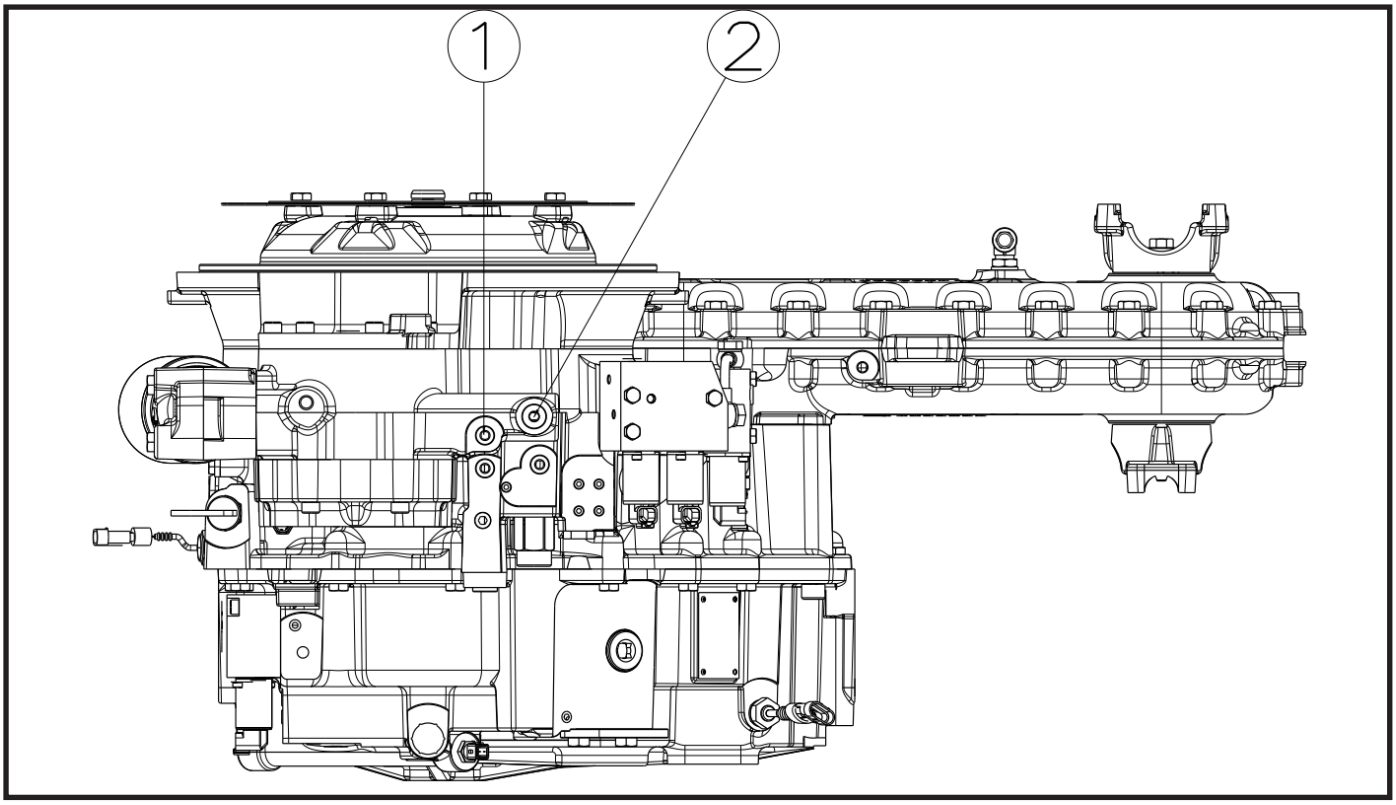

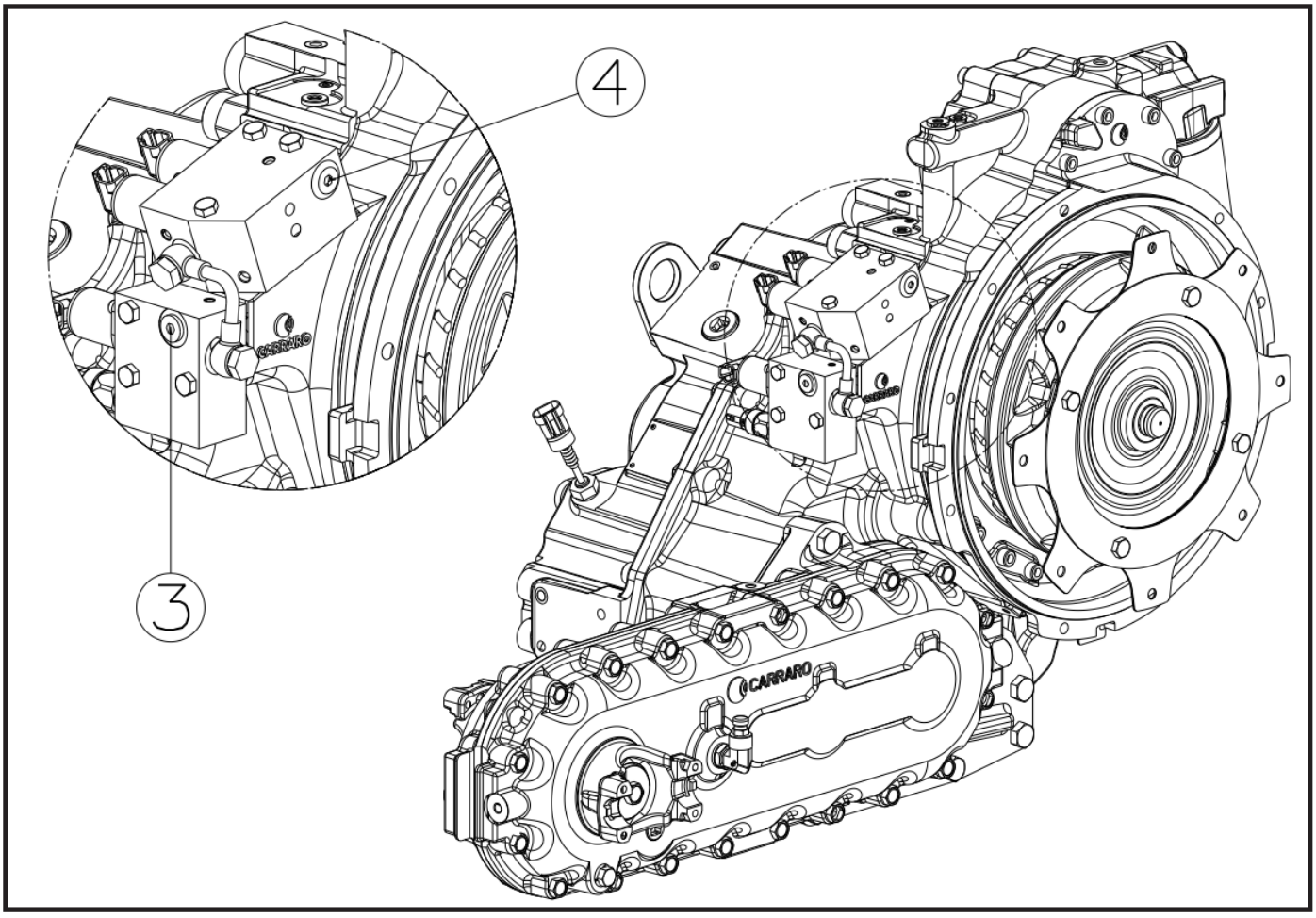

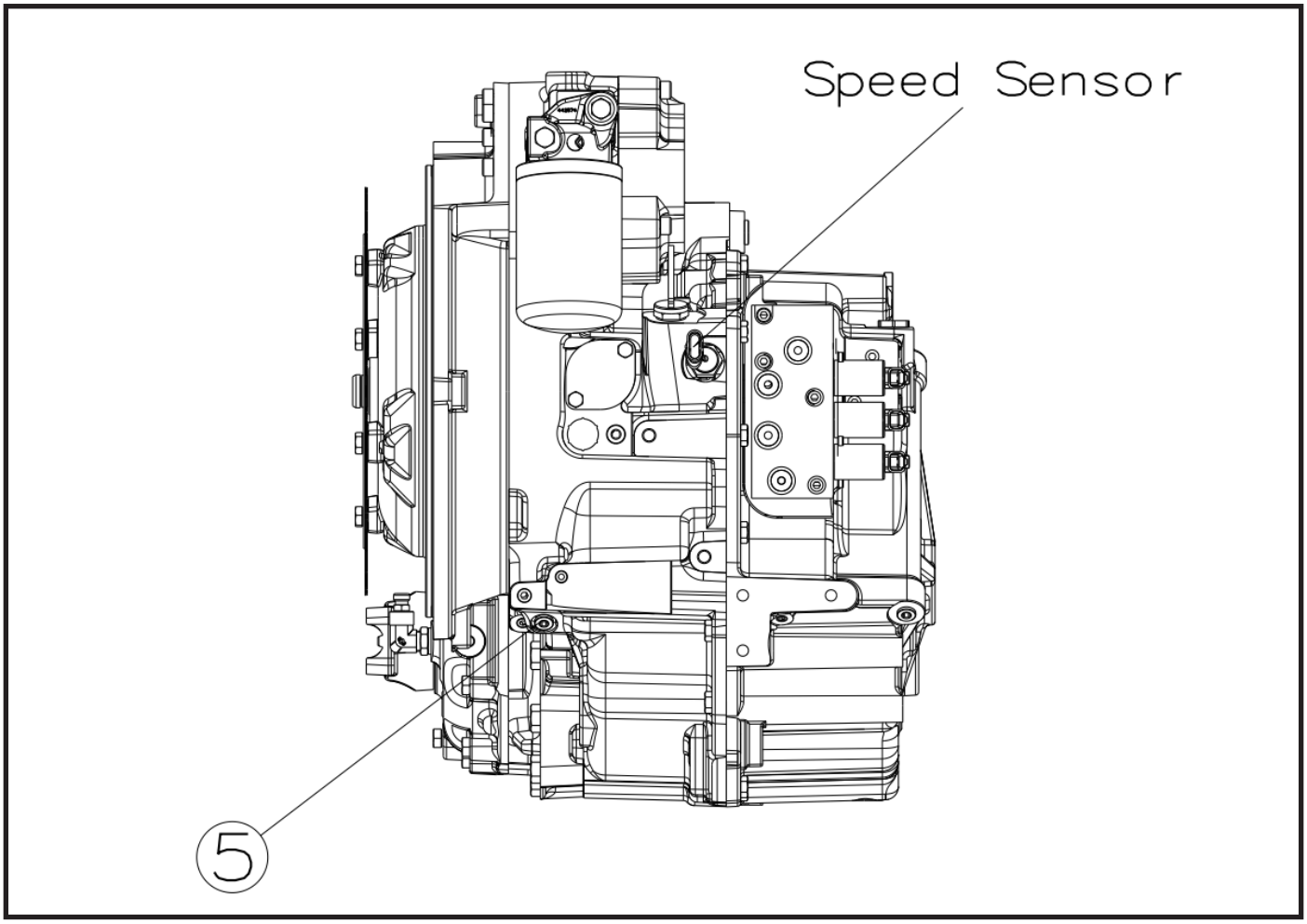
Speed Sensor
5

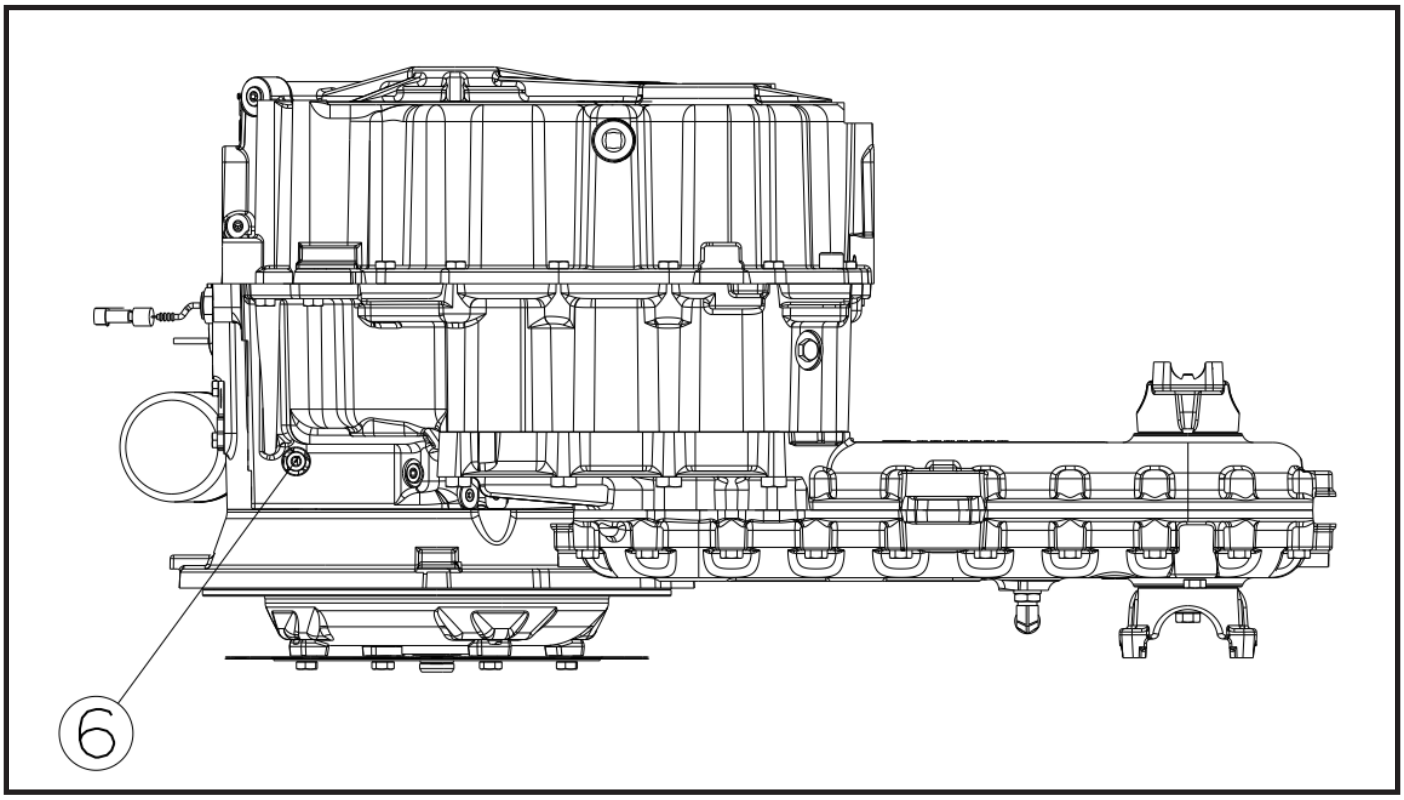
6

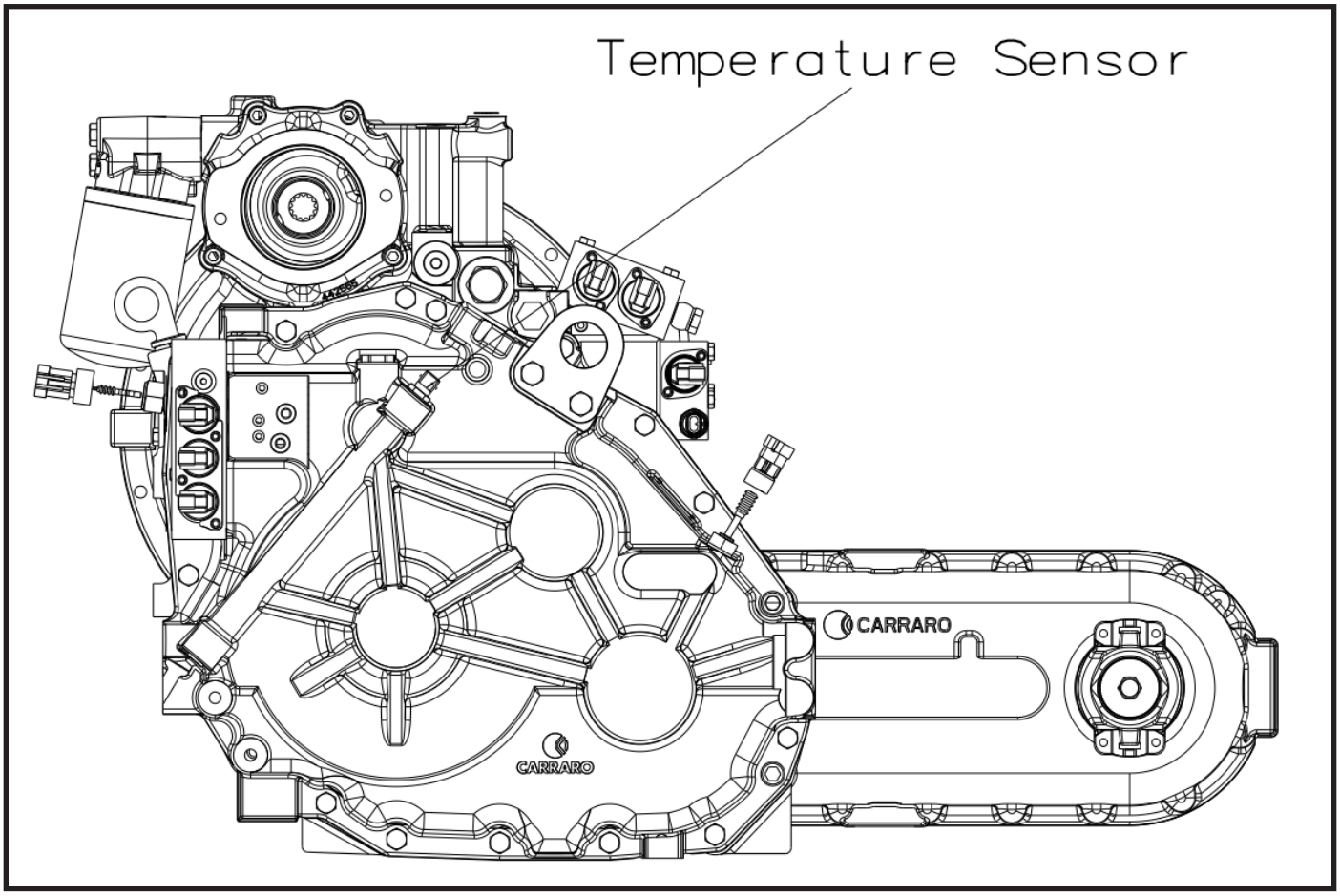
Temperature Sensor
CARRARO
CARRARO

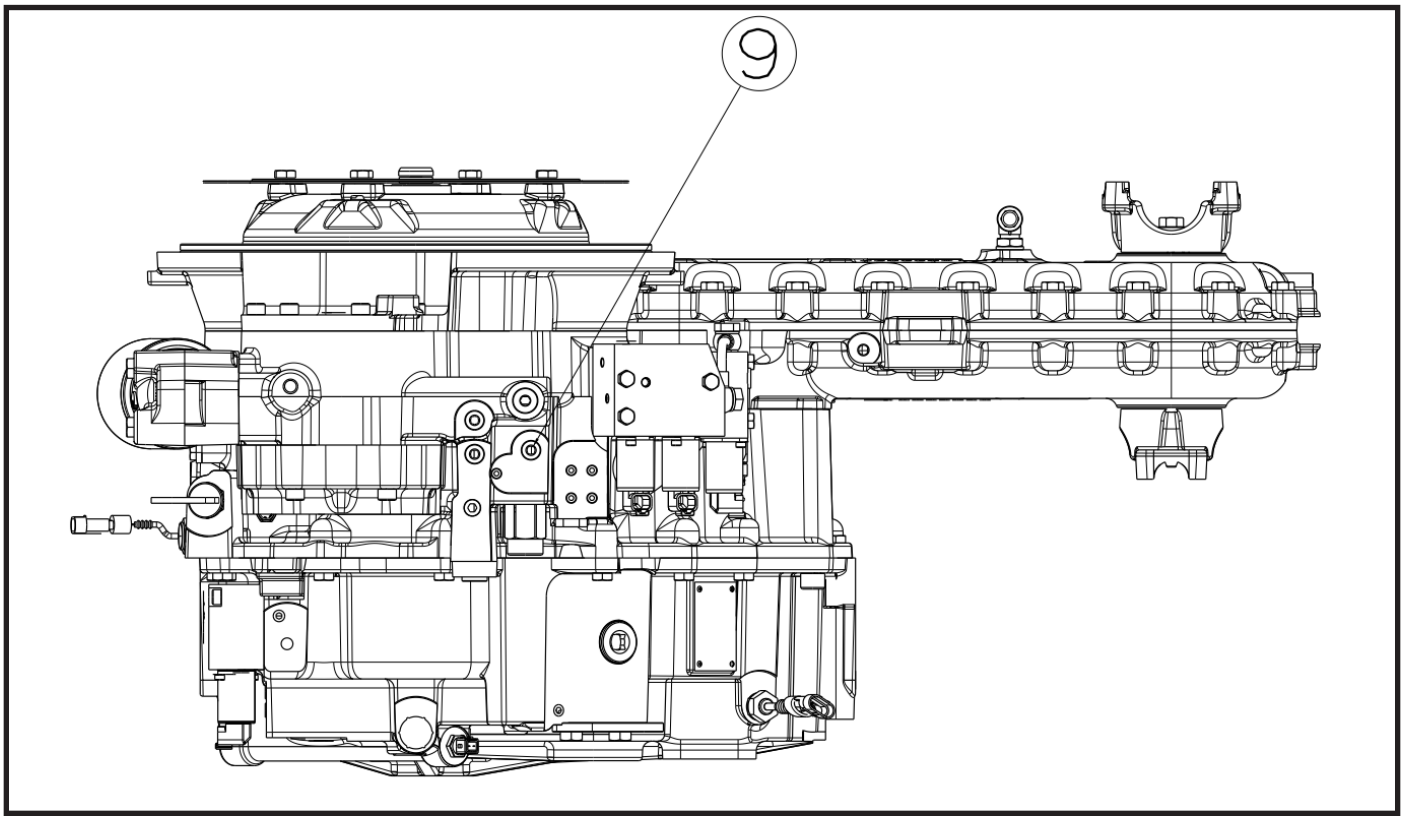
9

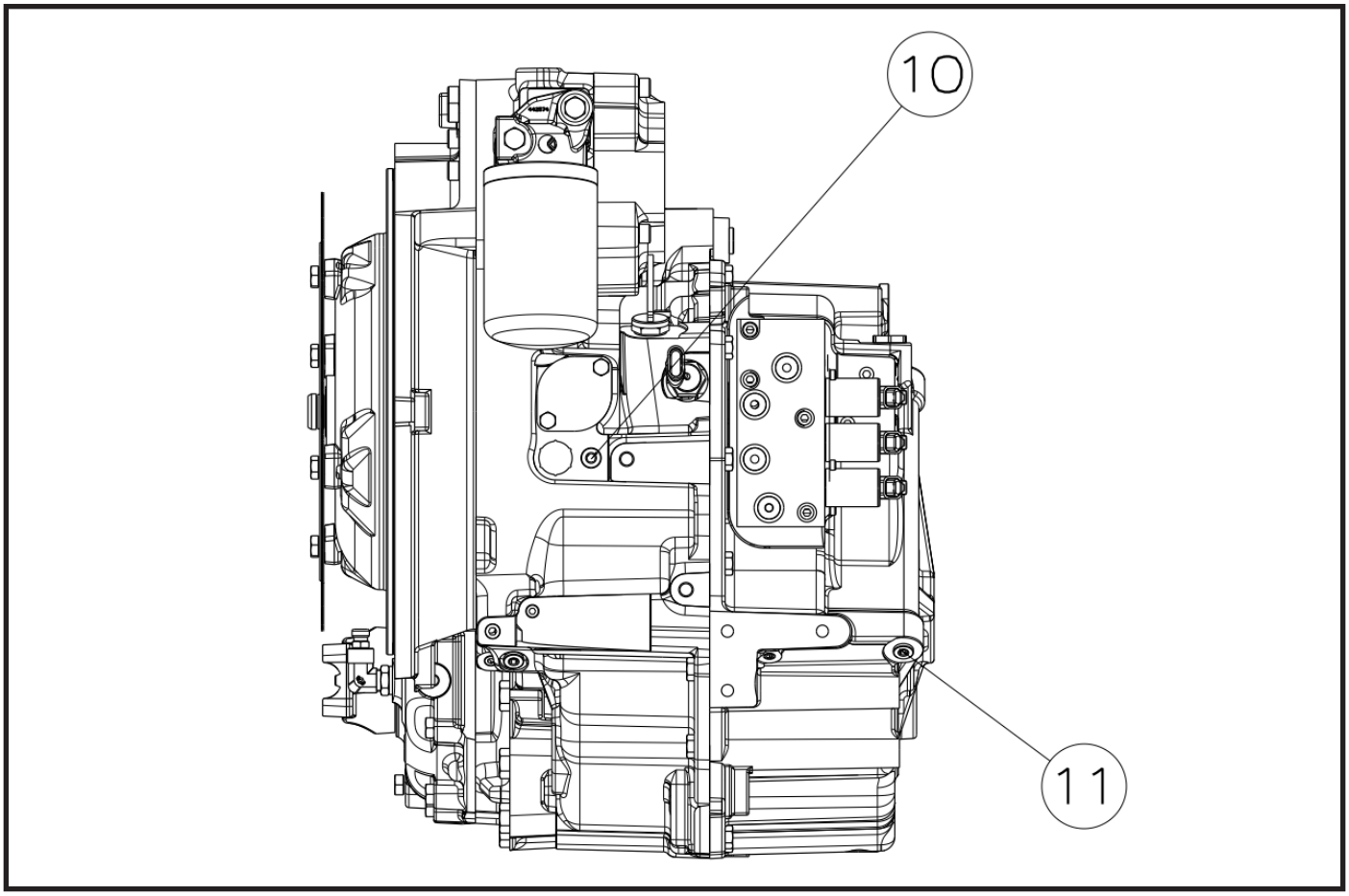

ITEM	DESCRIPTION
1	Pump pressure check port
2	Main pressure line pressure check port
3	K1 clutch pressure check port
4	K2 clutch pressure check port
5	K3 clutch pressure check port
6	FWD high clutch pressure check port
7	FWD low clutch pressure check port
8	Reverse clutch Pressure check port
9	Torque converter pressure check port
10	Oil cooler Pressure check port
11	Lubrication Pressure check port

ITEM	DESCRIPTION
1	This port is used to check the pressure created by the transmission oil pump and is important to understand if the transmission is working correctly. By making pressure measurements through this port, it can be determined whether the hydraulic system in the gearbox is working properly and whether there is any pressure drop or increase. This is very useful when monitoring transmission performance, fault detection and maintenance. These ports are designed to be connected to a pressure gauge or test equipment and are located in a specific position on the transmission. Checking that the pressure created by the transmission oil pump is at the correct levels is critical to ensure long-lasting and efficient operation of the transmission.
2	It is a port used to measure the pressure of the main pressure line of the hydraulic system. This port is used to check the hydraulic pressure inside the gearbox and determine if it is working correctly. Pressure measurements through this control port are important for assessing the health and performance of the transmission. Hydraulic pressure directly affects your gearshift performance and overall operation of the transmission. Features, the main pressure line pressure control port is used to evaluate the overall pressure levels of the transmission, the pump performance, and the overall condition of the hydraulic system. Regular pressure checks from this port are important to diagnose potential problems with the gearbox early and perform timely maintenance. This extends the life of the transmission and keeps the vehicle performance at an optimal level.
3	It is a port used to measure the hydraulic pressure in the K1 clutch. This port is used to check the correct operation of the gearbox, to detect possible malfunctions and to perform maintenance operations. The K1 clutch is a type of clutch that is used to perform certain gear changes in an automatic transmission. The hydraulic pressure allows the clutch to open and close, and this pressure must be at the correct level. The K1 clutch pressure control point allows for checking the pressure in the K1 clutch with a mechanical or electronic pressure measuring device. This checkpoint is a critical component for monitoring the performance and health of the transmission, maintaining accurate pressure levels, and detecting potential hydraulic or mechanical issues early.
4	It is a port used to measure the hydraulic pressure in the K2 clutch. This port is used to check the correct operation of the gearbox, to detect possible malfunctions and to perform maintenance operations. The K2 clutch is a type of clutch that is used to perform certain gear changes in an automatic transmission. The hydraulic pressure allows the clutch to open and close, and this pressure must be at the correct level. The K2 clutch pressure control point allows for checking the pressure in the K2 clutch with a mechanical or electronic pressure measuring device. This checkpoint is a critical component for monitoring the performance and health of the transmission, maintaining accurate pressure levels, and detecting potential hydraulic or mechanical issues early.
5	It is a port used to measure the hydraulic pressure on the K3 clutch. This port is used to check the correct operation of the gearbox, to detect possible malfunctions and to perform maintenance operations. The K3 clutch is a type of clutch that is used to perform certain gear changes in an automatic transmission. The hydraulic pressure allows the clutch to open and close, and this pressure must be at the correct level. The K3 clutch pressure control point allows for checking the pressure in the K3 clutch with a mechanical or electronic pressure measuring device. This checkpoint is a critical component for monitoring the performance and health of the transmission, maintaining accurate pressure levels, and detecting potential hydraulic or mechanical issues early.

6	It is a point used to check the oil pressure of the high clutch used in front-wheel drive (front-wheel drive (FWD)) vehicles. This point is the accessible point to measure or adjust the required oil pressure of the high clutch inside the gearbox.
7	It is a point used to check the oil pressure of the low clutch used in front wheel drive (front-wheel drive (FWD)) vehicles. This point is the accessible point to measure or adjust the required oil pressure of the low clutch inside the gearbox.
8	It is a point used to check the oil pressure of the reversing clutch inside the gearbox. This point is used to measure or adjust the pressure required by the reversing clutch in the transmission. This checkpoint plays an important role in maintenance and repair operations to ensure the functionality and performance of the transmission in reverse gears.
9	It is a connection point used to measure the pressure in the torque converter. This port is used to check whether the gearbox is working efficiently, to detect faults and to perform maintenance operations. A torque converter is a hydrodynamic device that transmits the engine's power to the transmission and at the same time increases the torque between the engine and the transmission, resulting in a smoother transition. The pressure in the torque converter is critical for the correct operation of the transmission. This pressure control point allows for checking the pressure with a mechanical or hydraulic pressure measuring device. In summary, this checkpoint is an important component to ensure the correct operation of the transmission and to detect potential problems early.
10	It is a port used to measure the pressure in the transmission oil cooler. This port is used to check the correct operation of the transmission oil cooling system, to detect possible malfunctions and to perform maintenance operations. The transmission oil cooler keeps the transmission oil temperature at a certain level, ensuring that the transmission operates smoothly and safely. The temperature and pressure of the oil are critical to the performance and life of the transmission.
11	It is a point used to check the oil pressure inside the gearbox. This point is usually in an accessible location on the outside of the transmission and is used to control or adjust a specific oil pressure value. Oil pressure is important to ensure that the parts inside the transmission are properly lubricated, and this type of checkpoint is used during maintenance or troubleshooting.

ITEM	TX In Speed [rpm]	1000	2400
1	P Pump [bar]	217.5-275.5 psi (15.0-19.0 bar)	(20.0-24.0 bar)
2	P Main [bar]	210-246.5 psi (14.5-17.0 bar)	(15.5-18.0 bar)
3	P K1 [bar]	203-246.5 psi (14.0-17.0 bar)	(15.0-17.5 bar)
4	P K2 [bar]	203-246.5 psi (14.0-17.0 bar)	(15.0-17.5 bar)
5	P K3 [bar]	203-246.5 psi (14.0-17.0 bar)	(15.0-17.5 bar)
6	P FH [bar]	210-246.5 psi (14.5-17.0 bar)	(15.0-17.0 bar)
7	P FL [bar]	210-246.5 psi (14.5-17.0 bar)	(15.0-17.0 bar)
8	P R [bar]	210-246.5 psi (14.5-17.0 bar)	(15.0-17.0 bar)
9	* P TC [bar]	22-116 psi (1.5-8.0 bar)	(8.0-12.0 bar)
10	* P Cooler [bar]	7-43.5 psi (0.5-3.0 bar)	(3.0-6.5 bar)
	* Q Main [lpm]	22-26	55-60
	* Q Lube [lpm]	10-20	30-40
	Oil Temp [°F/(°C)]	140 °F (60 °C)	140 °F (60 °C)

7.4.Hydraulic Pump

The hydraulic pump provides the pressure and flow necessary for the hydraulic system to operate, allowing the boom to move, lift loads, and perform a variety of other functions.

Working Principle

- **Power Source:** The hydraulic pump is driven by the Telehandler engine. The engine makes the pump rotate.
- **Pumping:** The hydraulic pump pulls the hydraulic oil from the tank and sends it to the pipes of the hydraulic system under high pressure. This pressurized oil powers the various hydraulic cylinders and motors in the system.
- **Motion and Control**: The operator directs the hydraulic flow using the control valves on the Telehandler. These valves control which cylinder or engine the pressurized oil goes to. The hydraulic cylinders lengthen or shorten using this pressurized oil, so that the boom of the Telehandler moves or lifts loads.
- **Reverse**: The hydraulic oil used returns to the reservoir again through the low pressure line. This cycle ensures that the hydraulic system runs continuously.
- **Filtration and Cooling** : The hydraulic system includes filters and coolers to keep the oil clean and cool. This ensures that the system is efficient and long-lasting.

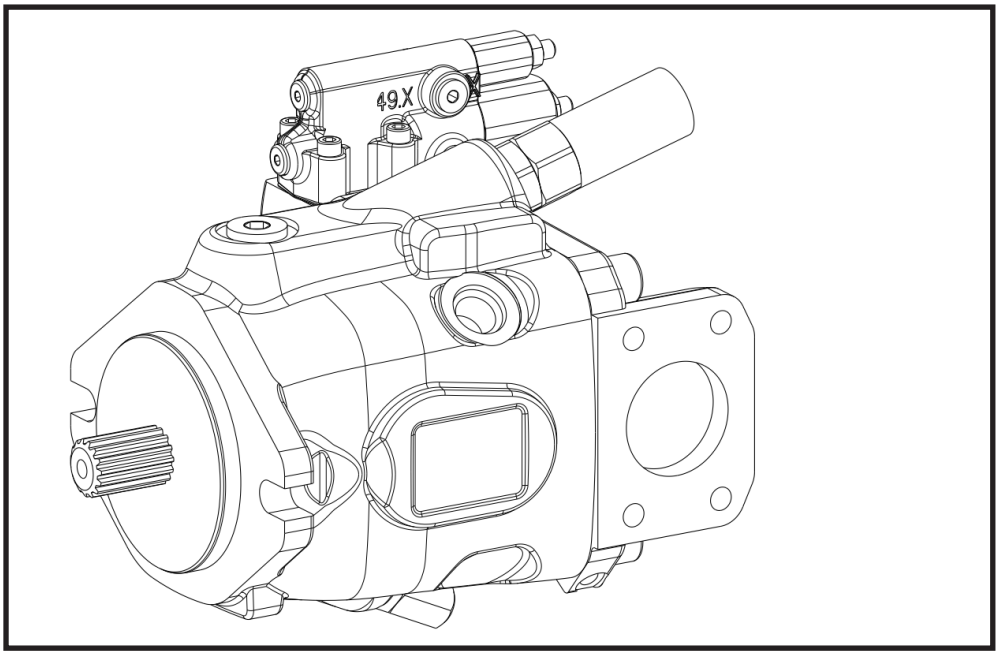

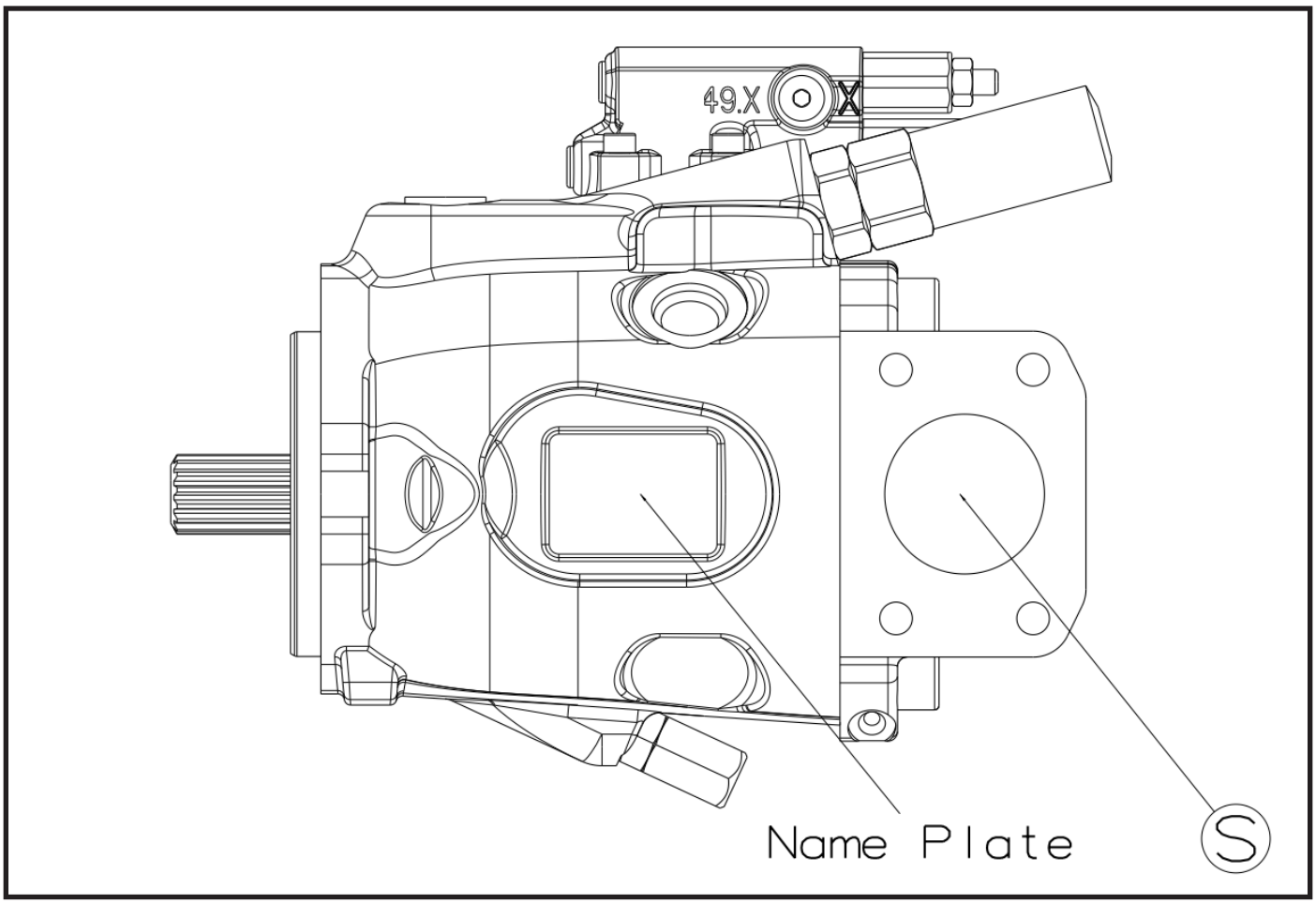
49.X
X
Name Plate
S

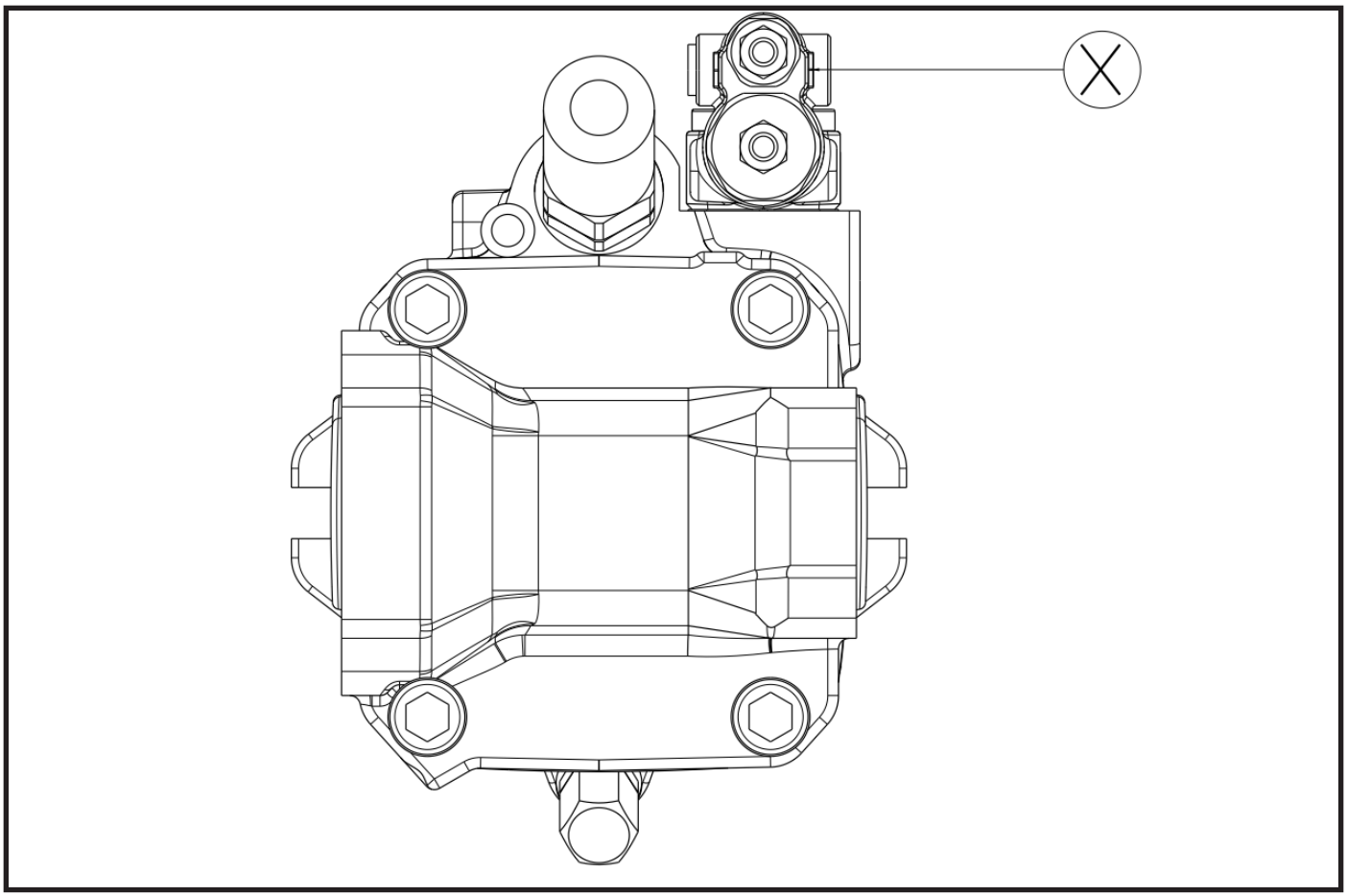
X

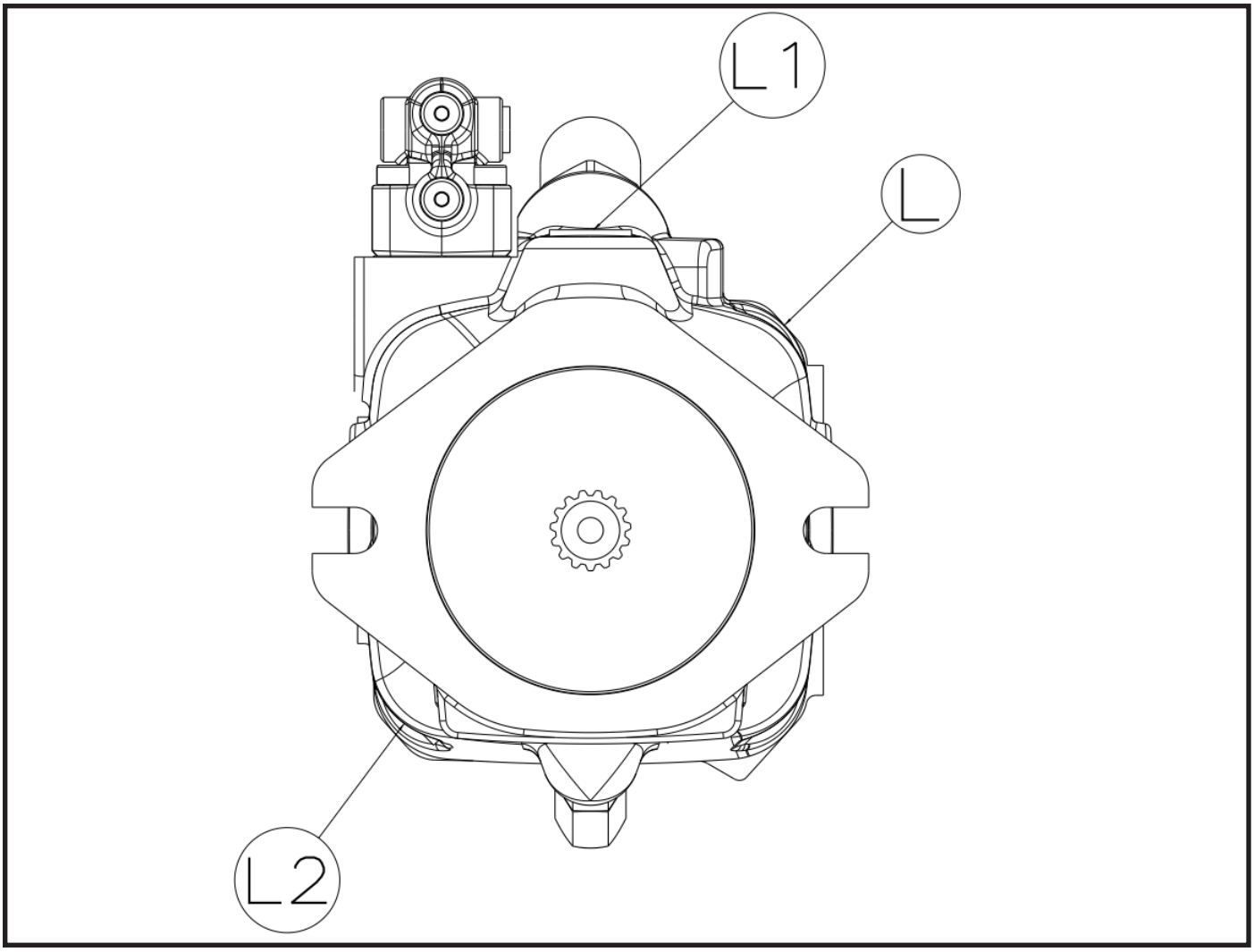
L1
L
L2

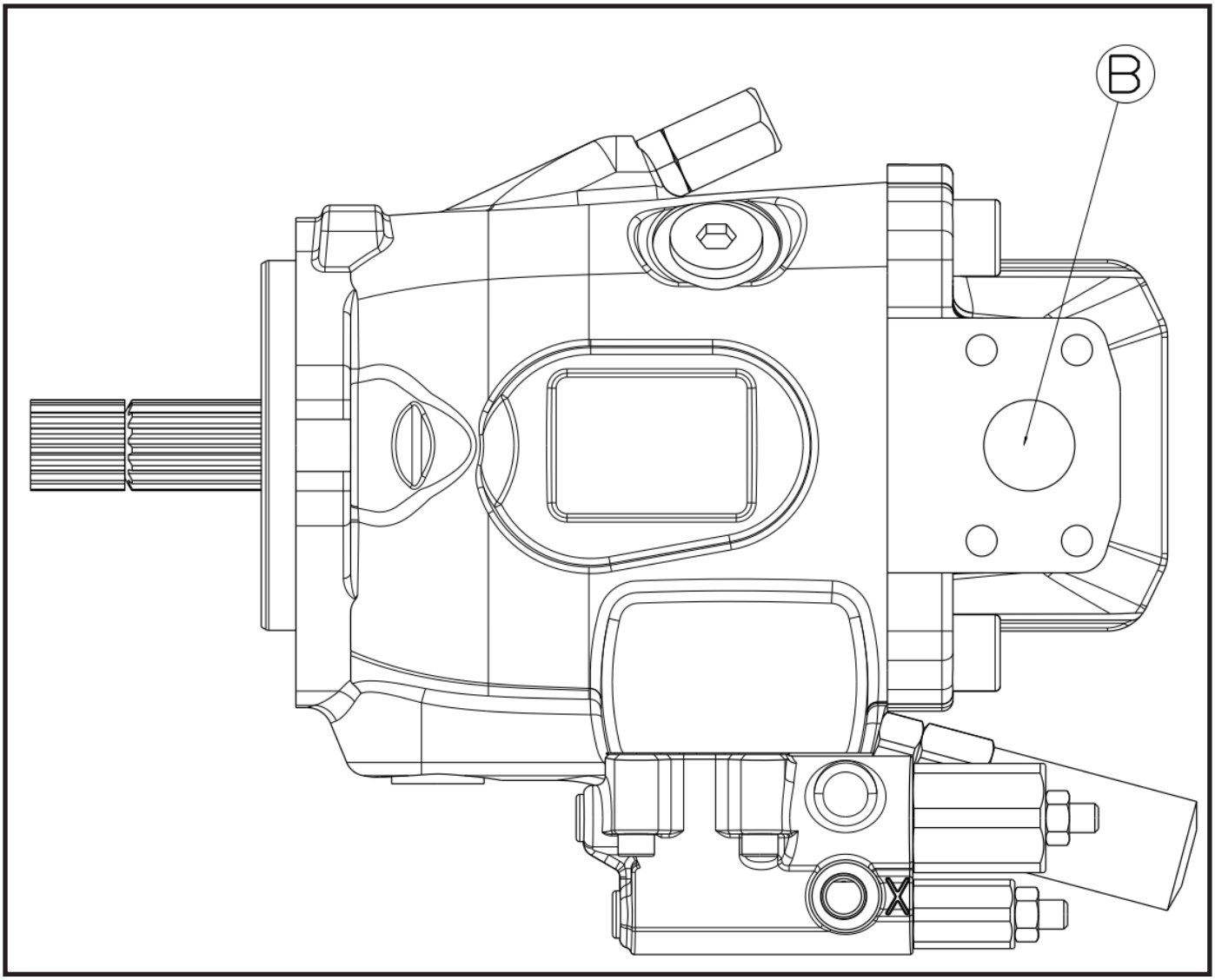

ITEM	DESCRIPTION
S	Suction Port
B	Pressure Port
X	Pilot Pressure Port
L	Case Drain Port
L1	Case Drain Port
L2	Case Drain Port

ITEM	DESCRIPTION
S	It is the inlet port through which the pump draws in the liquid. This port is the point at which fluid (usually hydraulic oil) is drawn into the pump. The pump receives hydraulic fluid through this port to pressurize the system. The suction port is usually located at the bottom of the pump and allows the liquid to be drawn more easily with the help of gravity. The correct size and cleanliness of the suction port are critical to the efficient operation of the pump.
B	It is the outlet port where the pump expels the liquid under pressure. This port is the point where the pump pressurizes the fluid drawn from the suction port and sends it to the rest of the hydraulic system. The fluid from the pressure port powers the hydraulic cylinders, motors, or other hydraulic components. The size and location of the pressure port varies depending on the design and requirements of the hydraulic system. The correct connection and sealing of the pressure port is important for the efficient and safe operation of the system.
X	It is a port used in hydraulic systems to provide a smaller control pressure. This port provides a low-pressure hydraulic fluid to control the operation of hydraulic control valves or other components. This port helps control larger power components and increases the efficiency of the hydraulic system.
L / L1 / L2	It is a port that allows excess liquid or fugitive oil in the pump body to be removed from the system. This port allows the oil accumulated around the seals and bearings inside the pump to be drained. Connecting the case drain port correctly and checking it regularly is important for the longevity and efficient operation of the pump.

7.5.Valves

Main Control Valve

This valve allows the operator to control the various movements of the Telehandler. Its functions are as follows;

- **Motion Control:** The main control valve manages the basic movements of the Telehandler, such as raising, lowering, extending and retracting its boom.
- **Directing Hydraulic Flow:** Ensures that hydraulic fluid flows to the correct cylinders and motors so that the
- movements desired by the operator can be performed.
- **Safety:** Prevents damage to the system in case of overload.

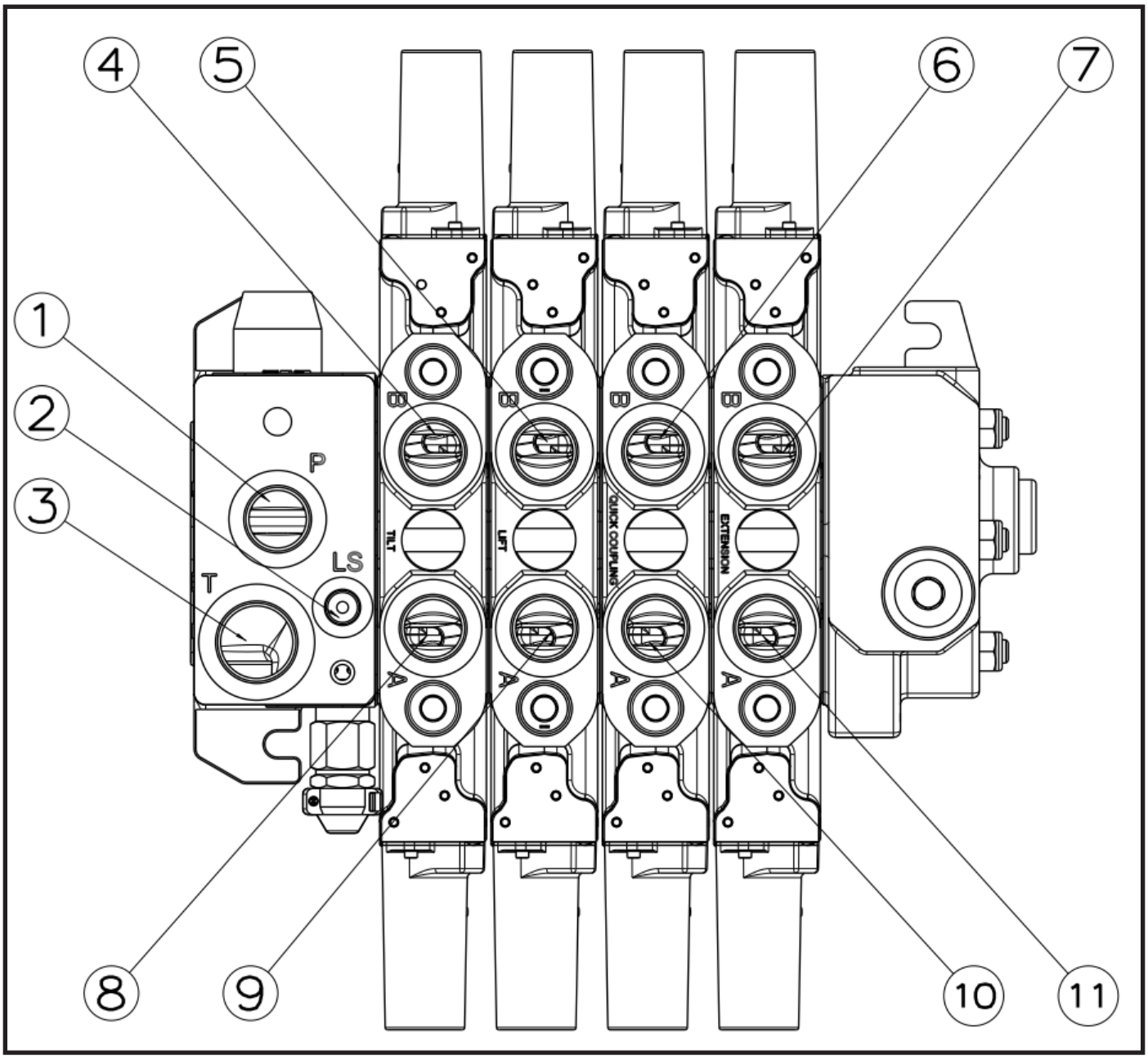

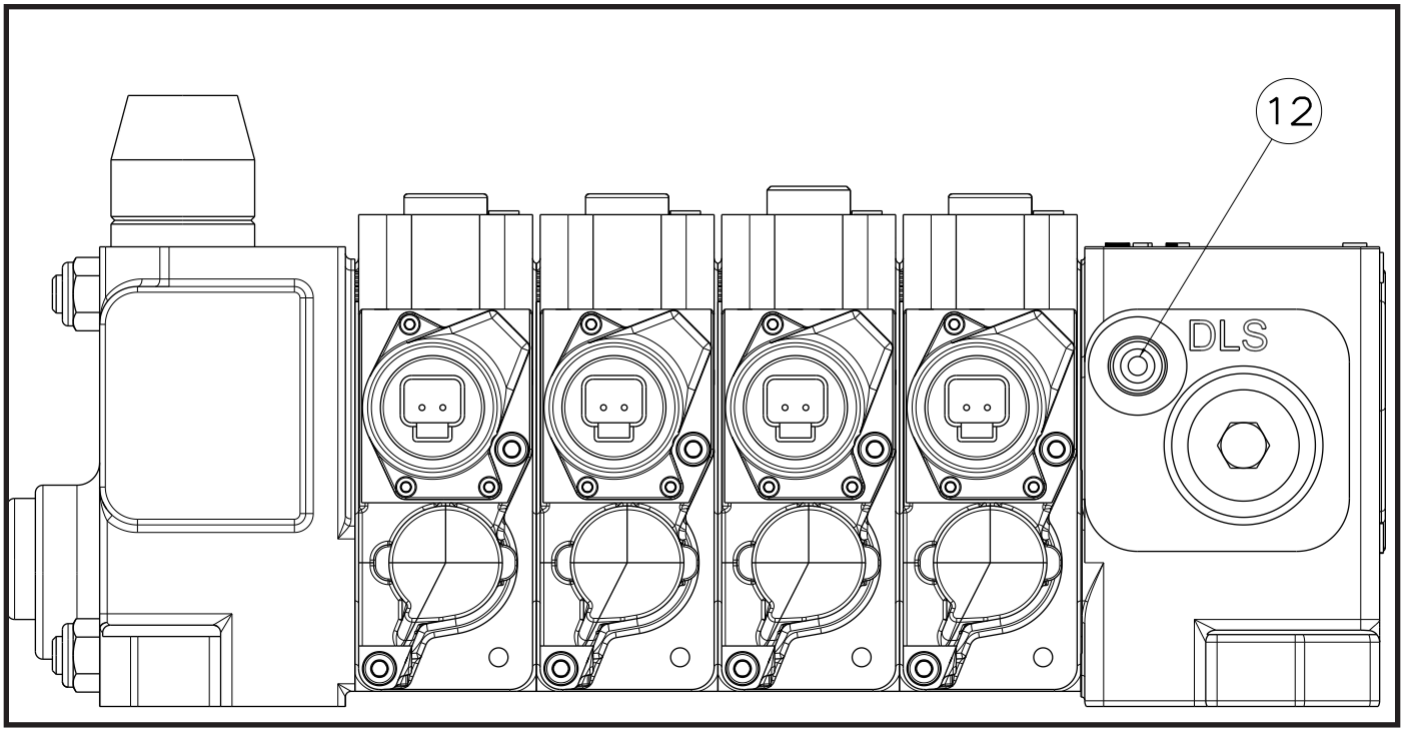

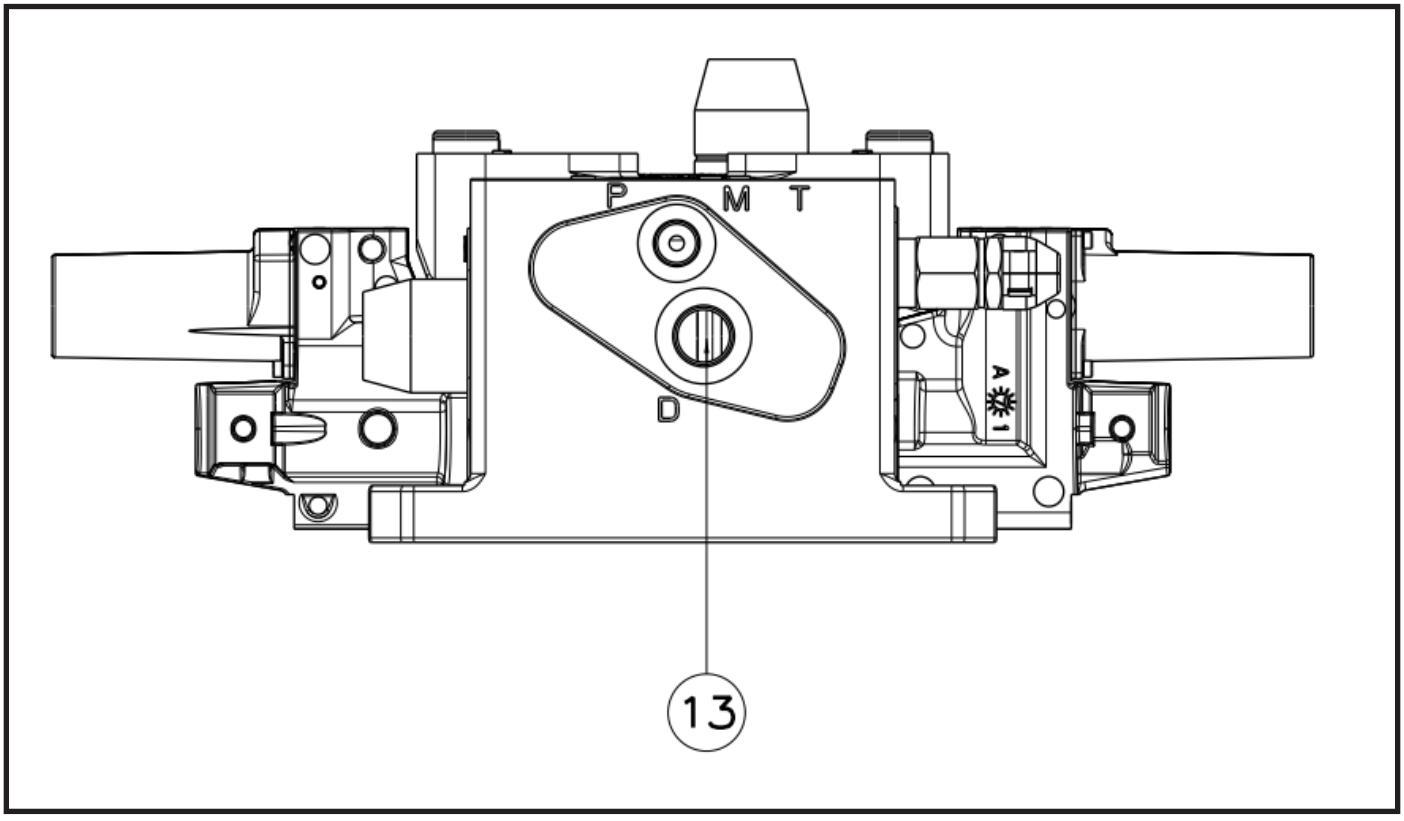

1. P Port-From Hydraulic Pump (B Port)	2. LS Port-From Hydraulic Pump (X Port)
3. T Port-To Hydraulic Oil Tank	4. B1 Port-To Boom Tilt Cylinder
5. B2 Port-To Lift Cylinder	6. B3 Port-To Quick Coupler Cylinder
7. B4 port-To Boom Extension Cylinder	8. A1 Port-From Boom Tilt Cylinder
9. A2 port-From Lift Cylinder	10. A3 Port-From Quick Coupler Cylinder
11. A4 Port-From Boom Extension Cylinder	12. DLS Port-To Steering Unit (LS Port)
13. D Port-To Steering Unit (P Port)	

1. It is the inlet port of the pressurized hydraulic fluid coming from the hydraulic pump to the main control valve in the hydraulic system. This port allows the hydraulic fluid to be directed and controlled in the correct direction through the channels inside the valve.	2. It is used in Load Sensing systems. This port is where the hydraulic pump receives the load sensing signal. **PURPOSE:** LS systems detect the pressure and flow demanded by the hydraulic prompt and adjust the output of the pump accordingly. Thus, energy savings are achieved and the efficiency of the system is increased. **LS Port (X Port):** The LS Port provides a signal that determines how much pressure the loads in the system need. This signal comes from the control valve, usually via a pilot line, and regulates the settings of the hydraulic pump. **OPERATION:** The LS signal is used to adjust the output pressure of the pump according to the current load demand in the system.
3. It is the place that provides the return of the fluid in the hydraulic system. **PURPOSE:** The T-port allows the hydraulic fluid used in the system to return to the tank or reservoir after completing its task. In this way, the fluid is filtered and stored for reuse. **LOCATION:** In hydraulic control valves, it is usually where the pressurized fluid entering through the P port exits the system after completing its work. **FUNCTION**: The T-port reduces the pressure in the hydraulic circuit and ensures the safe return of the fluid. This prevents excessive pressure and potential wear and tear on the system.	4. It is a connection point on the hydraulic pump. This port allows fluid to be directed to a specific component in the hydraulic system (in this case, the boom cylinder). In short, it refers to the system in which the fluid is transported from the hydraulic pump to the boom cylinder and the cylinder is controlled in this way.
5. It is the second connection point on the hydraulic pump. This port allows the hydraulic fluid to be directed to a specific component in the hydraulic system (in this case, the lifting cylinder). In short, it refers to the system in which fluid is transported from the hydraulic pump to the lifting cylinder and in this way the cylinder is controlled.	6. It is the third connection point on the hydraulic pump. This port allows the hydraulic fluid to be directed to a specific component. In short, it refers to the system in which the fluid is transported from the hydraulic pump to the Quick coupler and in this way the cylinder is controlled.

7. It is the fourth connection point on the hydraulic pump. This port allows the hydraulic fluid to be directed to a specific component in the hydraulic system (in this case, the extension cylinder). In short, it refers to the system in which fluid is transported from the hydraulic pump to the extension cylinder and in this way the cylinder is controlled.	8. It is a connection point on the hydraulic pump. It refers to the system in which the hydraulic fluid returns from the boom tilt cylinder to the A1 port. This return flow provides pressure and flow control of the hydraulic system after completing the movement of the cylinder.
9 It is a connection point on the hydraulic pump. It refers to the system in which the hydraulic fluid from the lifting cylinder returns to the A2 port. This return flow provides pressure and flow control of the hydraulic system after completing the movement of the cylinder.	10. It is a connection point on the hydraulic pump. Quick refers to the system in which the hydraulic fluid from the coupler returns to the A3 port. This return flow provides pressure and flow control of the hydraulic system after completing the movement of the cylinder.
11. It is a connection point on the hydraulic pump Boom refers to the system in which the hydraulic fluid from the extension cylinder returns to the A4 port. This return flow provides pressure and flow control of the hydraulic system after completing the movement of the cylinder.	12. DLS (Dynamic Load Sensing) port, this port is part of the dynamic load sensing system. It optimizes the flow and pressure of hydraulic fluid by detecting load and pressure changes in hydraulic systems. In short, it refers to the system in which the dynamic load sensing fluid is transported from the hydraulic pump to the steering unit, and in this way the steering system transmits load and pressure information to the hydraulic system. This connection increases the precision and responsiveness of the steering wheel for more efficient control.
13. It refers to the system in which hydraulic fluid is transported from the hydraulic pump to the steering unit, thus ensuring the pressure supply of the steering unit. This connection allows the steering to operate and control with hydraulic pressure.	

Overcentre Valve

Function of Overcentre Valve;

- **Controlled Movement**: By controlling the movement of the hydraulic cylinder, it prevents sudden movements and load drops.
- **Safety**: It balances the pressure fluctuations that may occur in the hydraulic system and provides a safe working environment.
- **Backflow Preventer**: It prevents backflow that may occur due to reverse pressure applied to the hydraulic cylinder during load lifting.

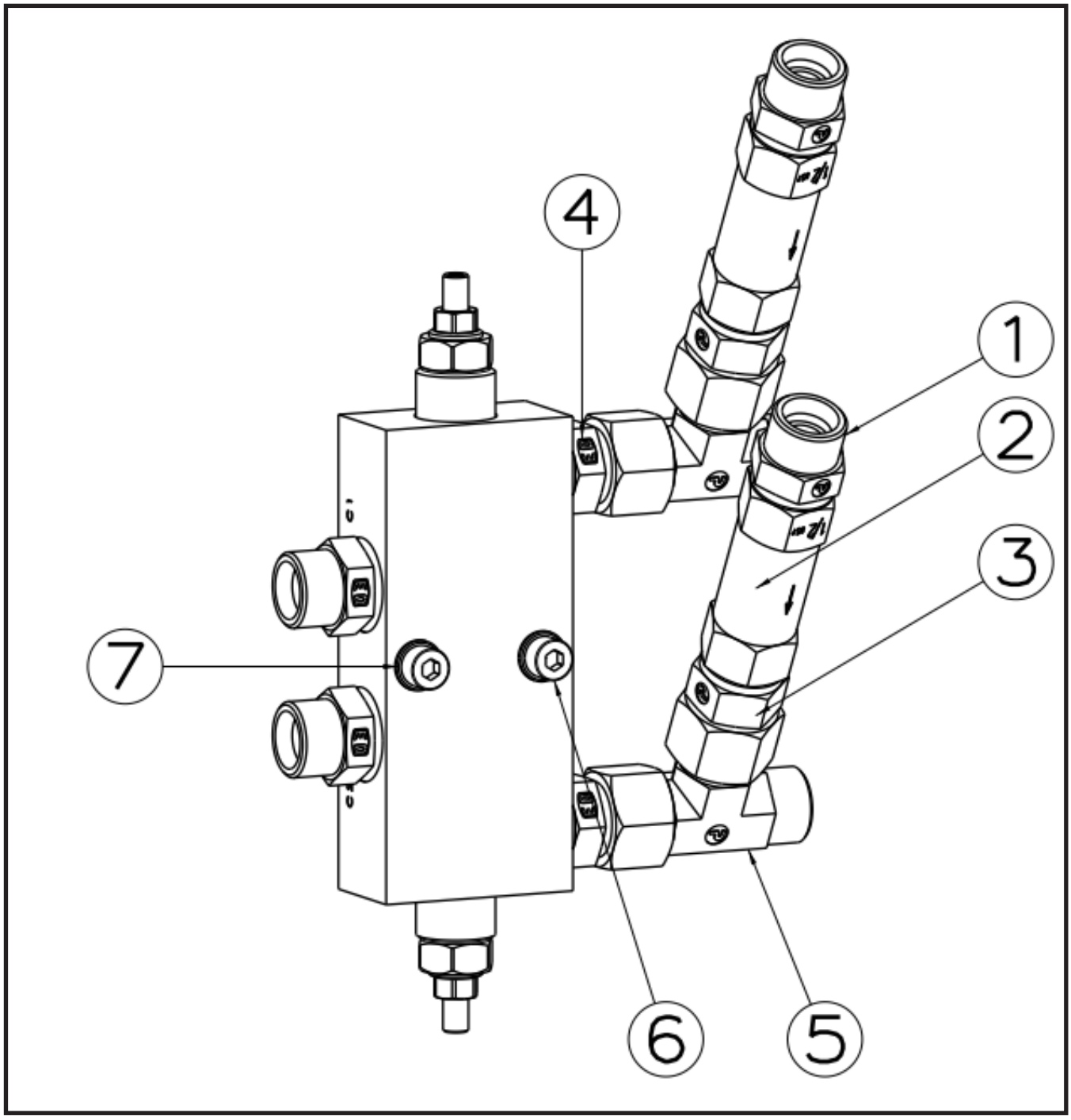

1. Male Stud Connector	2. Check Valve
3. Connector	4. Male Stud Connector
5. Swivel Nut Run Tee	6. Screw DIN 912 M8x45 GVZ
7. Rondela DIN 125 M8 GVZ	

Hydraulic Scheme

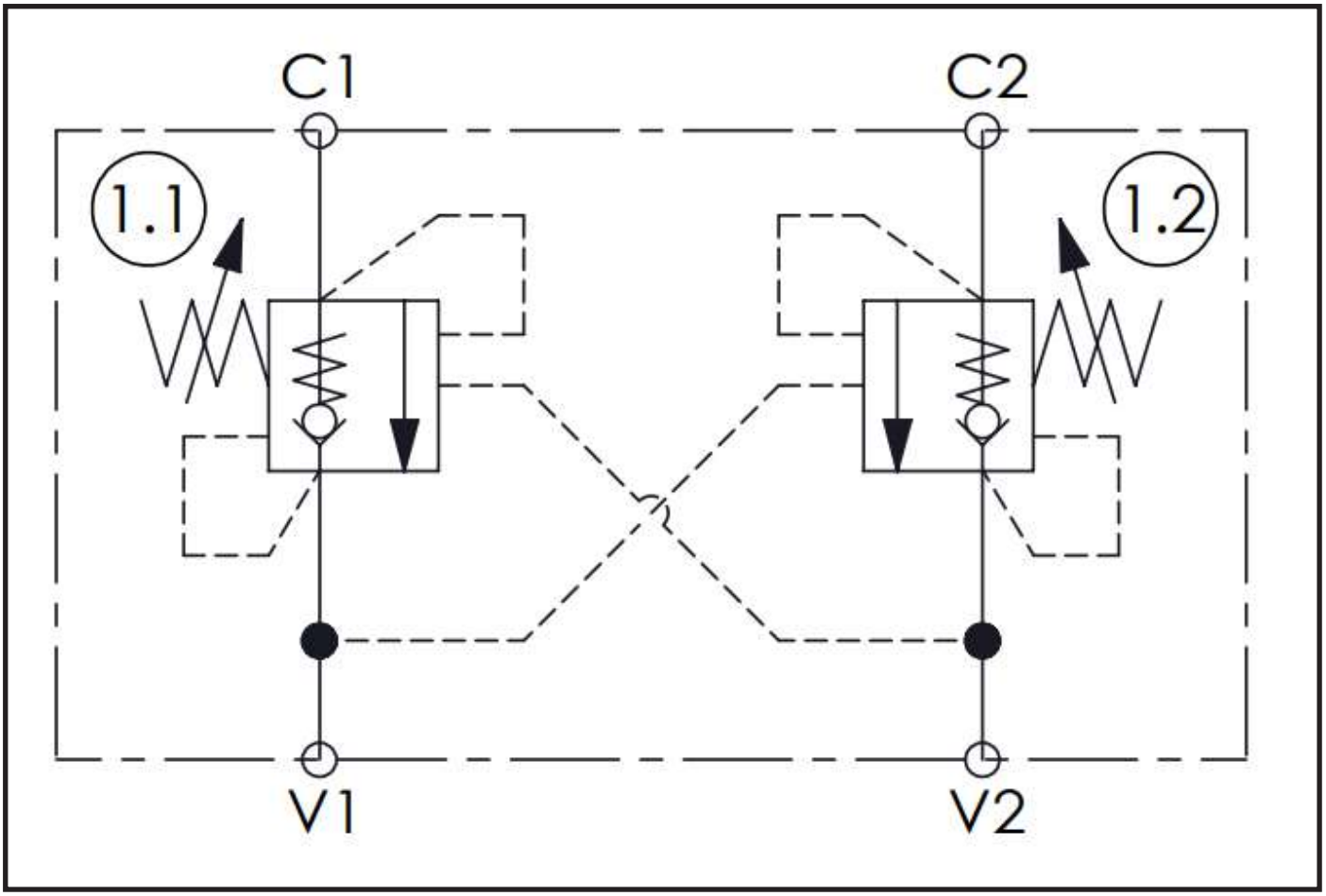

Sway Valve

A sway valve is a hydraulic valve used to control the oscillation of the body of the machine. This valve is critical to ensure safe and stable operation of the machine, especially in situations of imbalance. The main functions of the Sway valve are as follows;

- **Balancing:** Provides stability by controlling the tilt of the Telehandler body to the sides. This reduces the risk of the machine tipping over, especially on rough terrain or during load lifting.
- **Safety:** Increases safety for the operator and bystanders by preventing the telehandler from tilting excessively to the sides. Maintaining a proper balance helps prevent accidents.
- **Sensibility**: The Sway valve allows the operator to fine-tune the body of the machine. This is especially important in confined spaces or sensitive load handling operations.
- **Performance Increase:** The stability of the machine increases work efficiency. Uninterrupted operation is ensured without the need for pauses or adjustments due to balance issues.

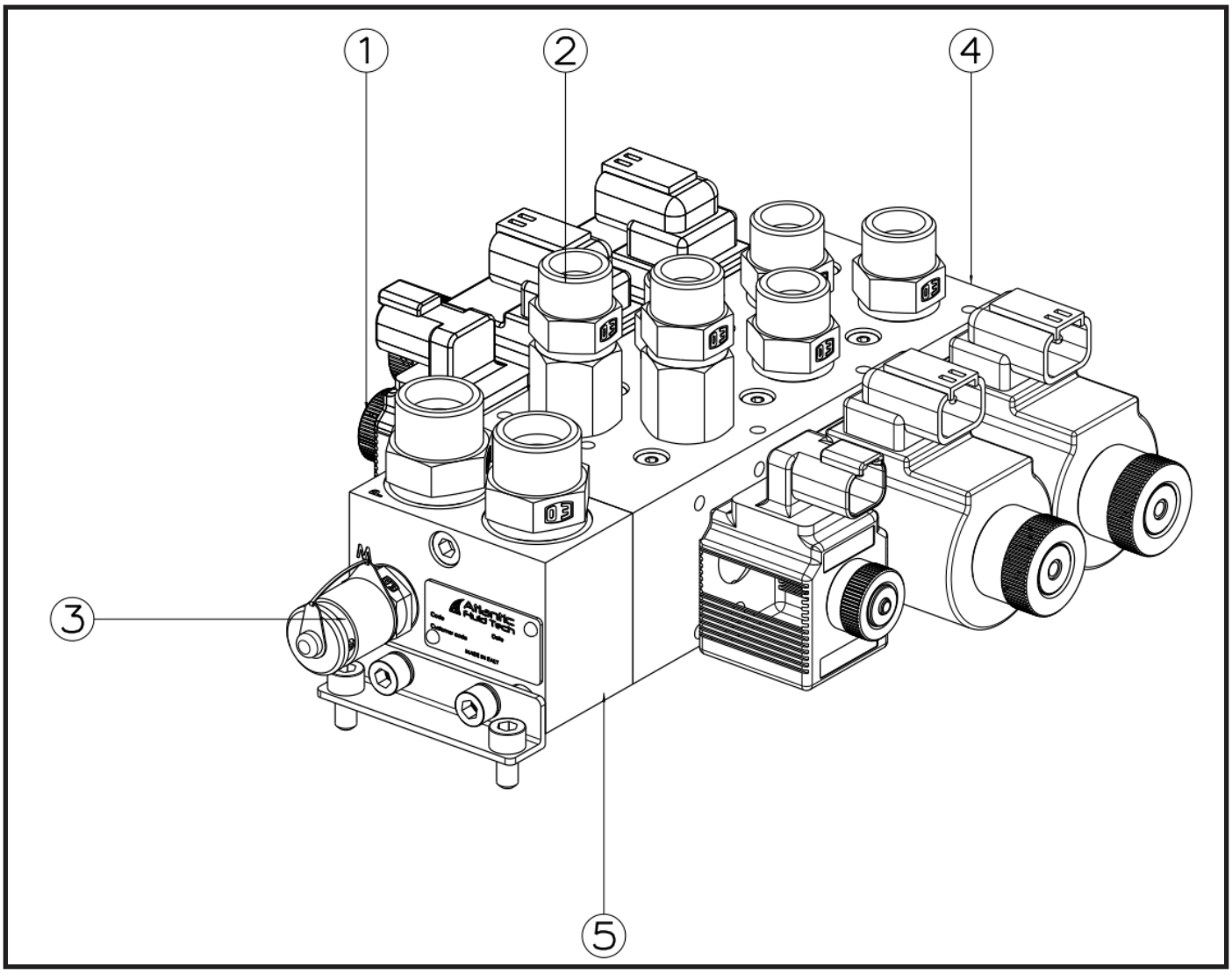

1. Male Stud Connector	2. 3/8 BSP – Ø12S Bush
3. Manometer Jack Nipple	4. Monoblock Manifold
5. Inlet Manifold	

Hydraulic Scheme

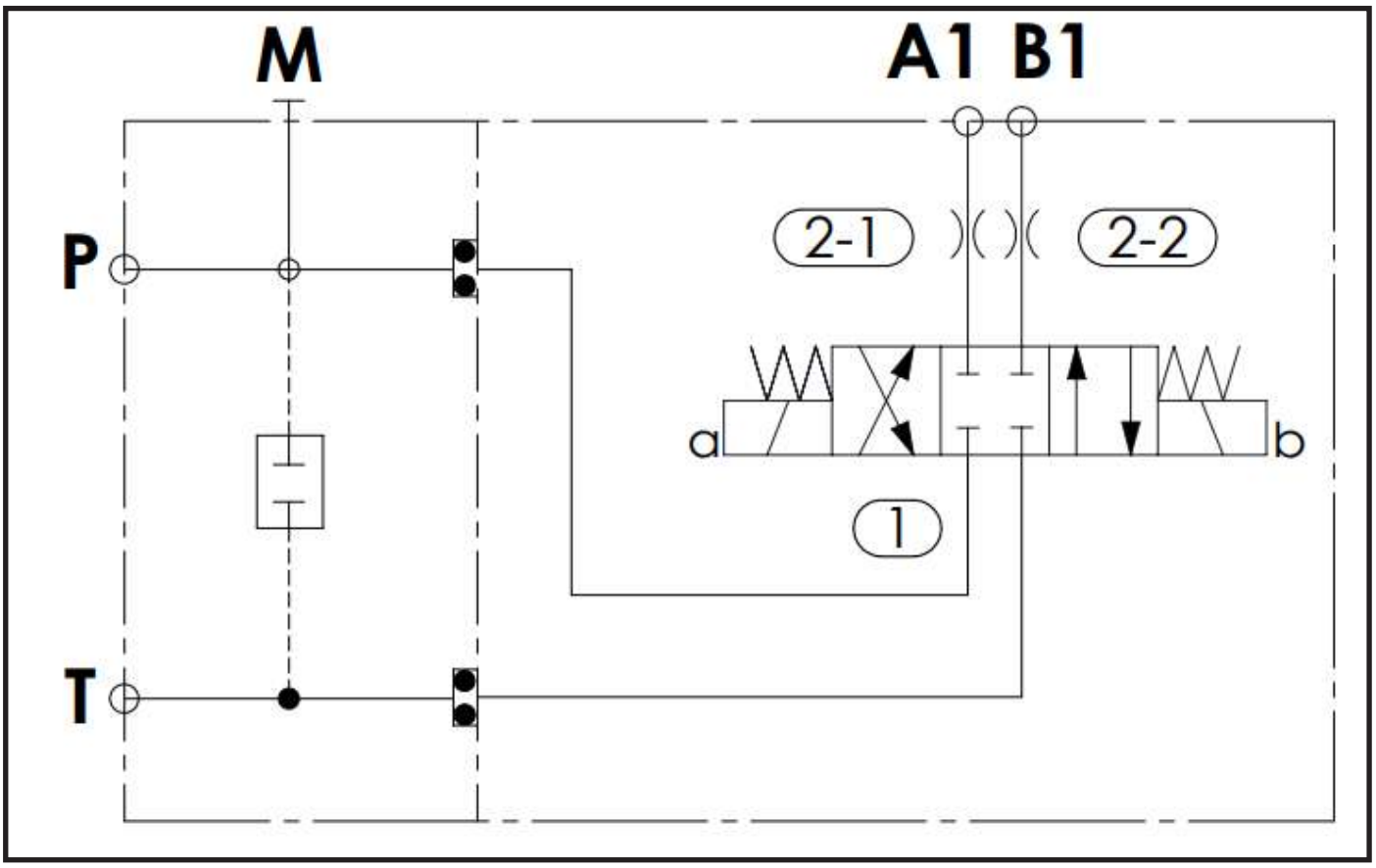

Shut Off Valve

It is a component that ensures stable and safe operation of the telehandler.

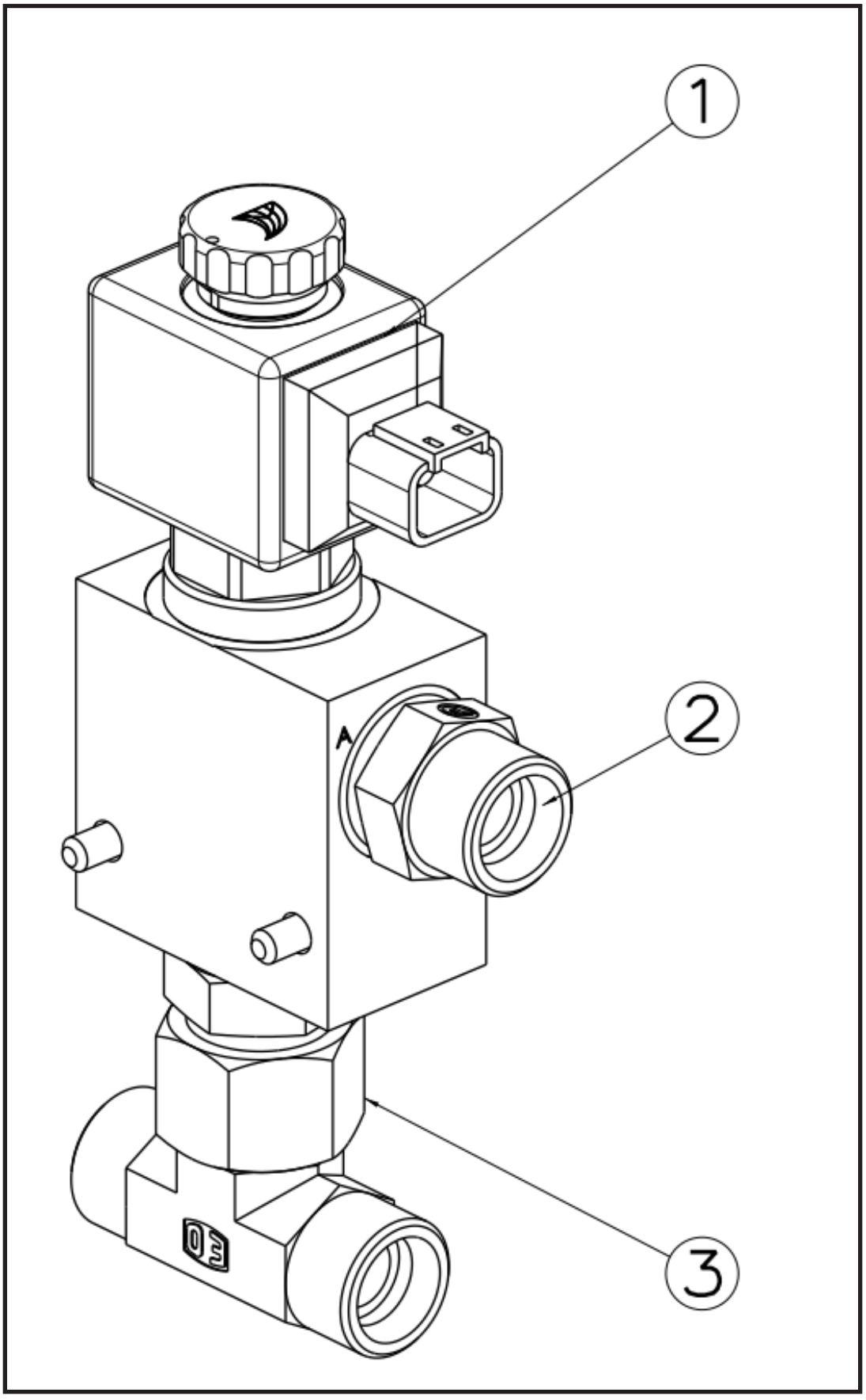

1. Unloading Valve	2. Male Stud Connector	3. EO Swivel Nut Branch Tee

Hydraulic Scheme

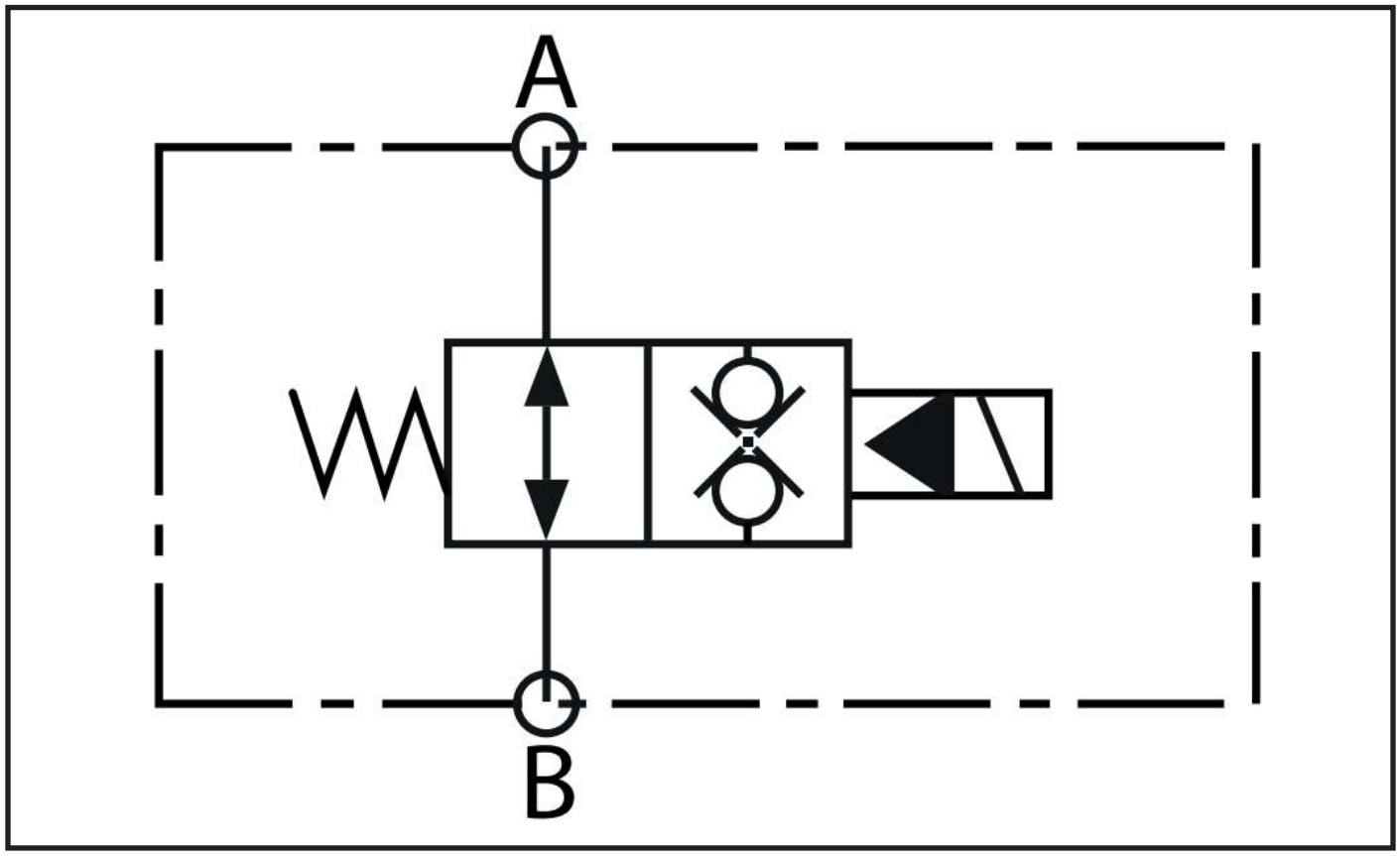

Pilot Brake Oil Supply Valve

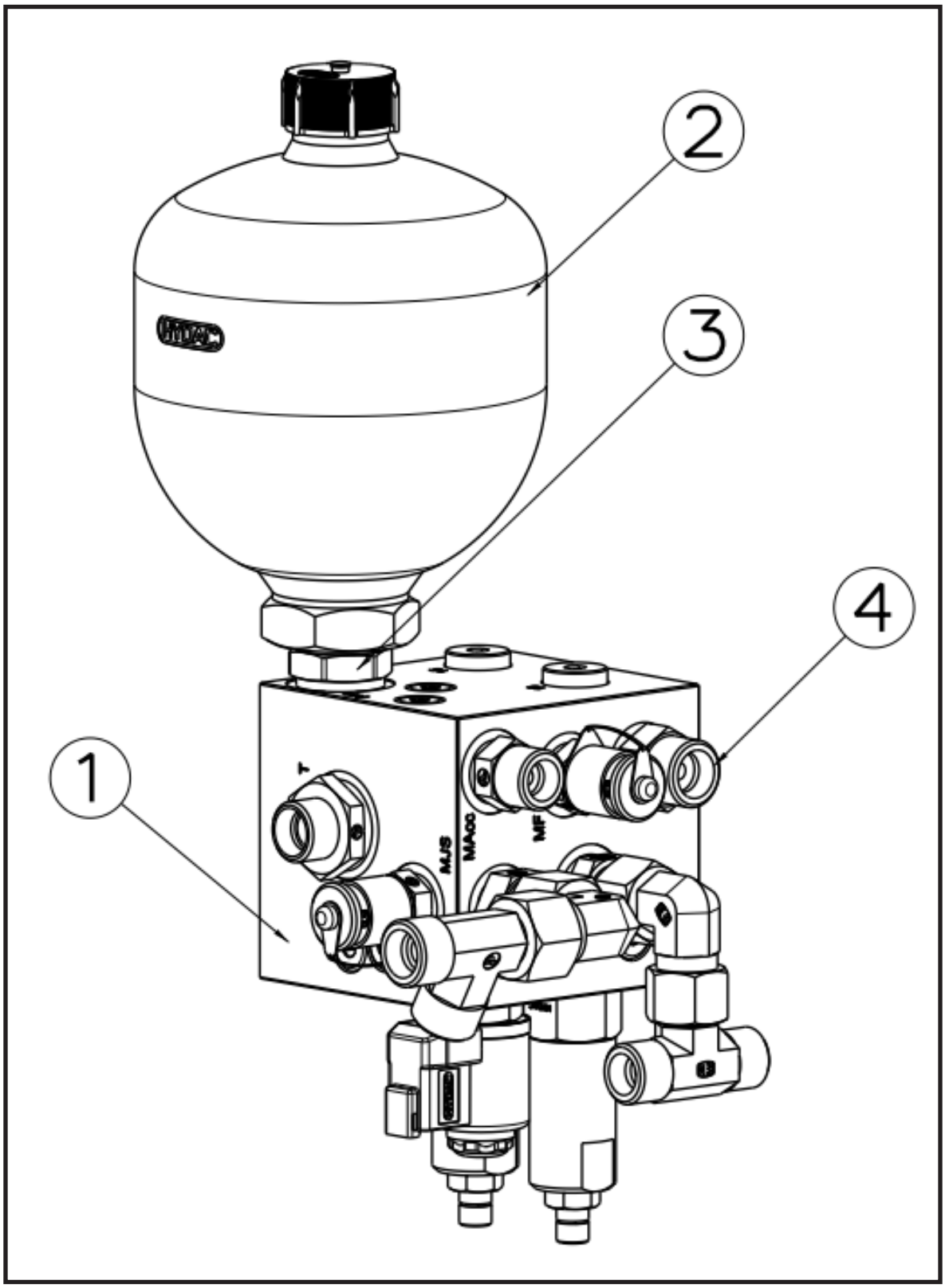

The Accumulator Valve is a component used in hydraulic and pneumatic systems. Its task is to ensure that the pressurized liquid or gas stored in an accumulator is used in the system in an orderly and controlled manner. These valves are generally used for purposes such as regulating the pressure in the accumulator, ensuring that the fluid is released at the right time and in the right amount, reducing pulses and vibrations, and saving energy.

1. Supply Block	2. Hydraulic Accumulator
3. 1/2” BSP Nipple	4. Male Stud Connector

Hydraulic Scheme

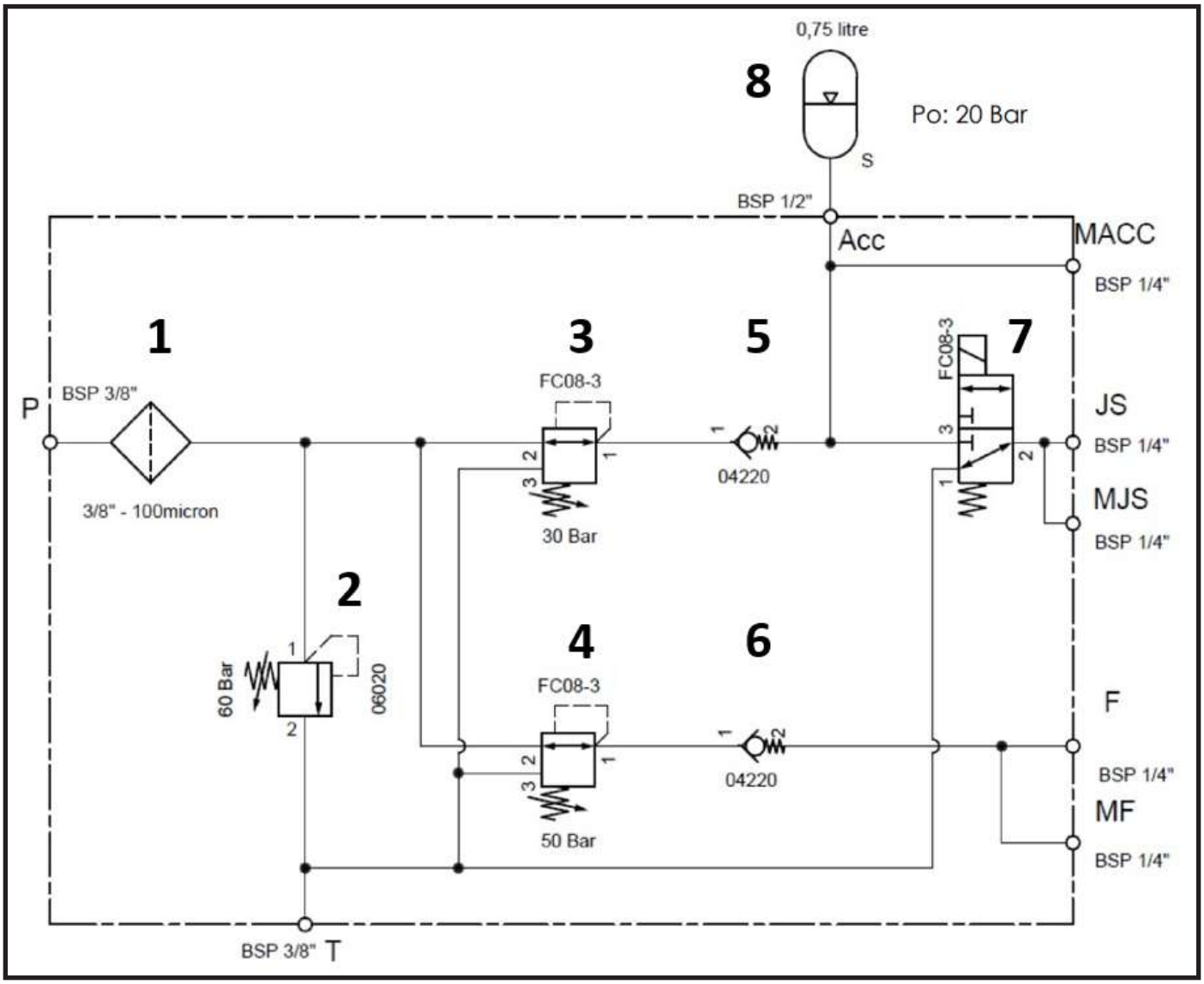

1. Filter Element	2. Pressure relief valve
3. Pressure reducing valve	4. Pressure reducing valve
5. Check valve	6. Check valve
7. 3/2 Directional spool valve solenoid operated	8. Accumulator

Return Filter

It is an important component used in the hydraulic system and ensures that the hydraulic oil remains clean. The workhouse is as follows;

- **Cleaning Hydraulic Oil**: Hydraulic oil can become contaminated with dirt, metal fragments, and other foreign matter as it circulates through the system. The return filter ensures that the hydraulic oil is free of these contaminants before it returns to the reservoir.
- **Component Protection**: Clean hydraulic oil prevents wear and damage to components in the hydraulic system, such as pumps, valves, and cylinders. This extends the life of the components, resulting in a more reliable operation.
- **Improving System Performance**: Dirty hydraulic oil can cause frequent failures and wear on the hydraulic system. This requires frequent maintenance and replacement of parts. The return filter minimizes such problems and reduces maintenance costs.

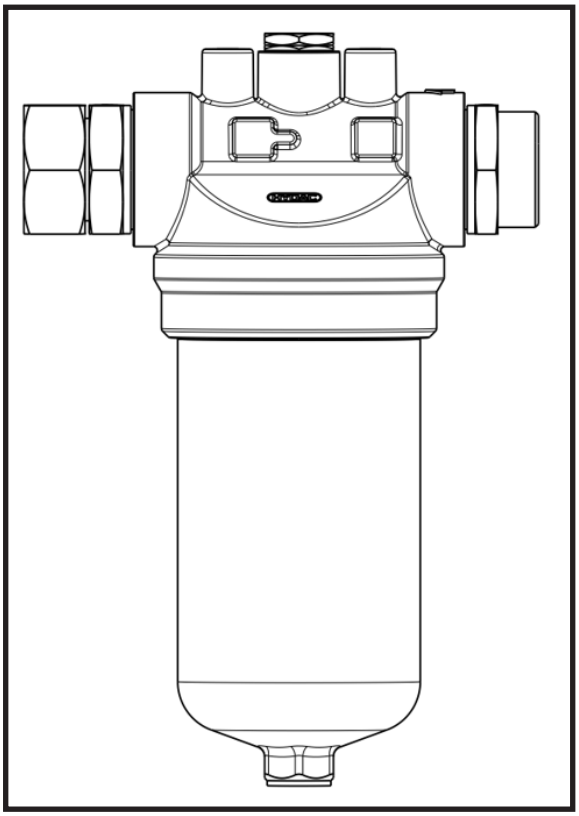

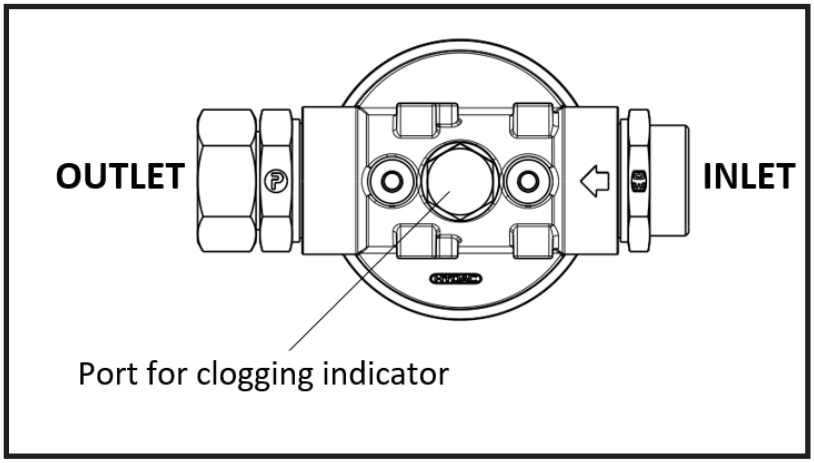

Hydraulic Scheme

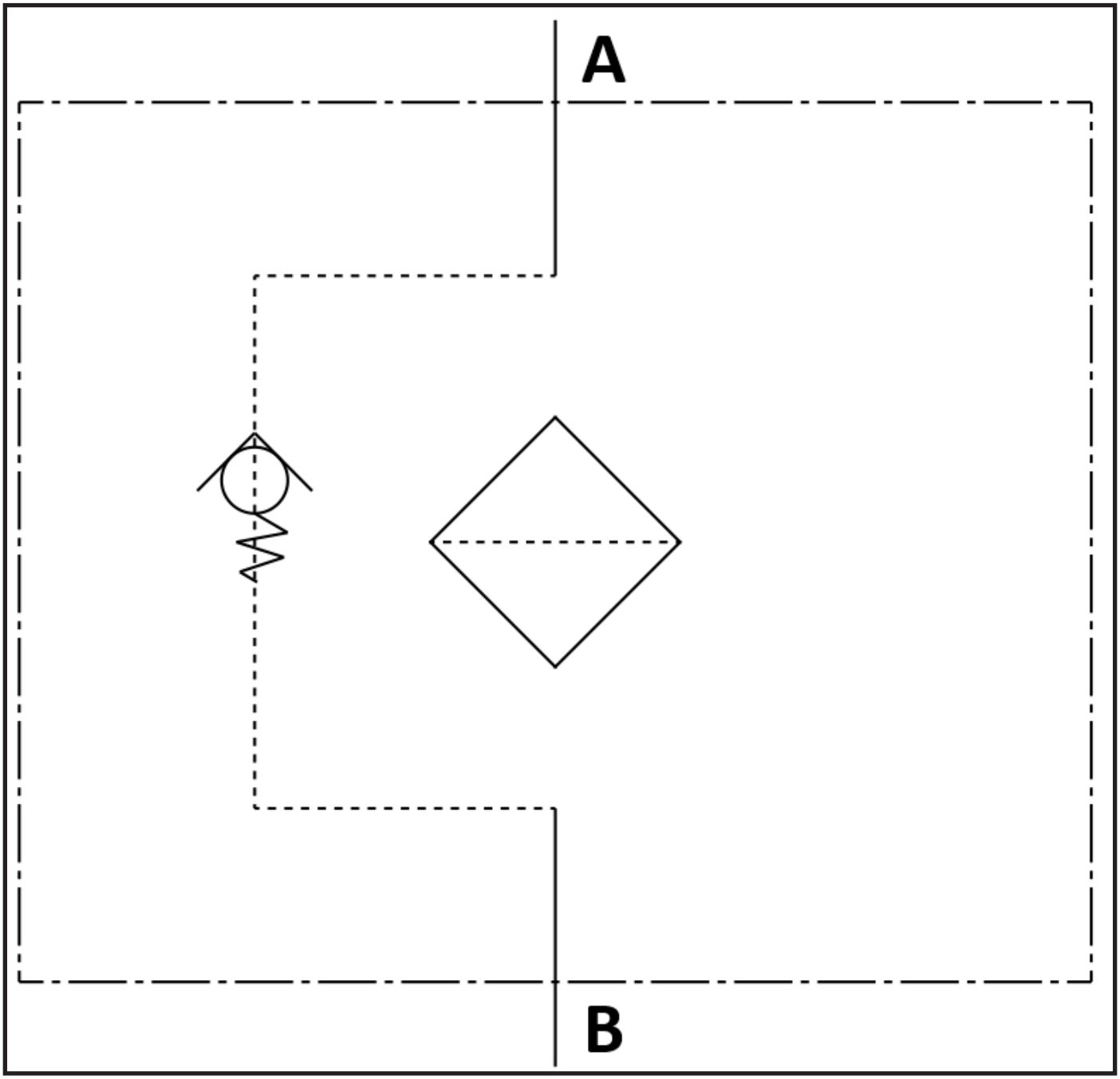

- **4WS Valve**
- **Rear Wheel Steering**: Steering the rear wheels only.
- **Four Wheel Steering**: The front and rear wheels move in the same direction, resulting in a smaller turning radius.
- **Crab Mode**: Opening the front and rear wheels in the same direction, which allows for lateral movement..

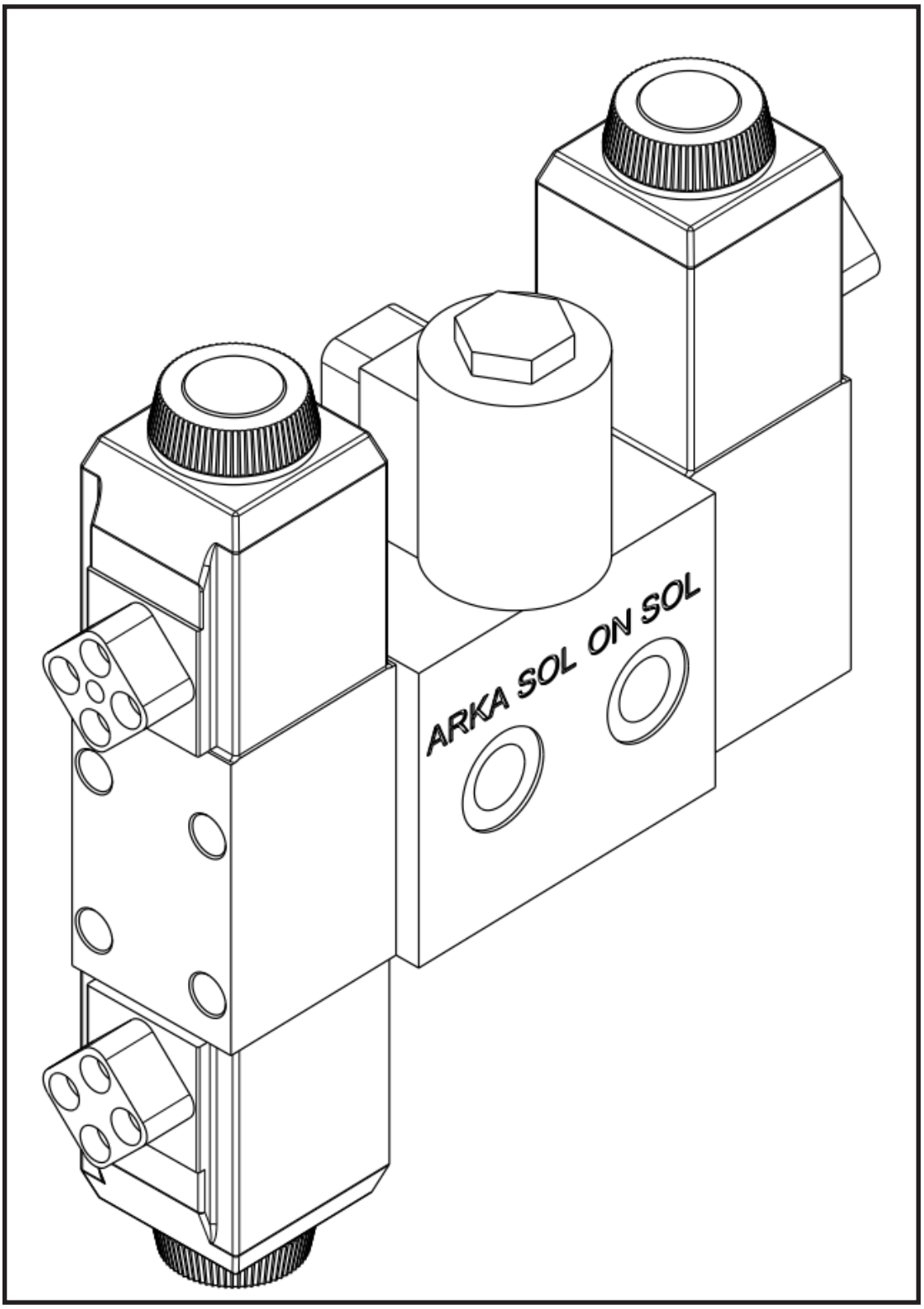

Extension Cylinder

The extension cylinder allows the telescopic boom to be extended. This cylinder increases the length of the boom, allowing loads to reach higher or farther points. In this way, the telehandler can lift and transport objects at different heights and distances.

Working Principle

Extension cylinders work on the basis of hydraulic principles;

- **Pressure of Hydraulic Fluid:**

The operator commands the hydraulic pump using control mechanisms. This pump directs the hydric fluid to the extension cylinder under pressure.

- **Extension of the Cylinder:**

Hydraulic fluid applies pressure to one side of the piston inside the extension cylinder. This pressure pushes the piston forward and allows the boom to lengthen. In this way, the telescopic boom is extended and the telehandler can reach farther points.

- **Retraction of the Cylinder:**

When the operator wants to retract the boom, he gives a command to the hydraulic pump in the opposite direction. The hydraulic fluid exerts pressure on the other side of the piston, pulling the piston back. In this way, the boom is shortened and the telehandler becomes more compact.

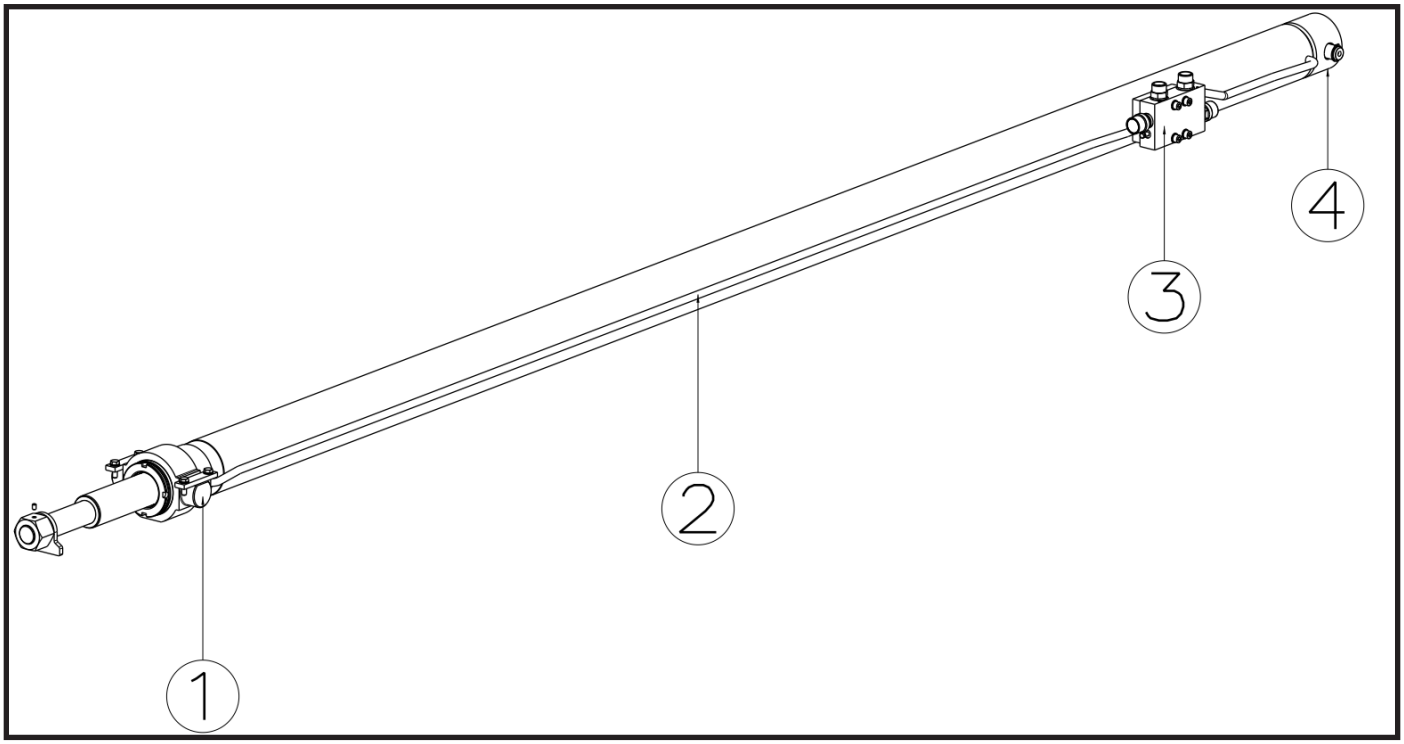

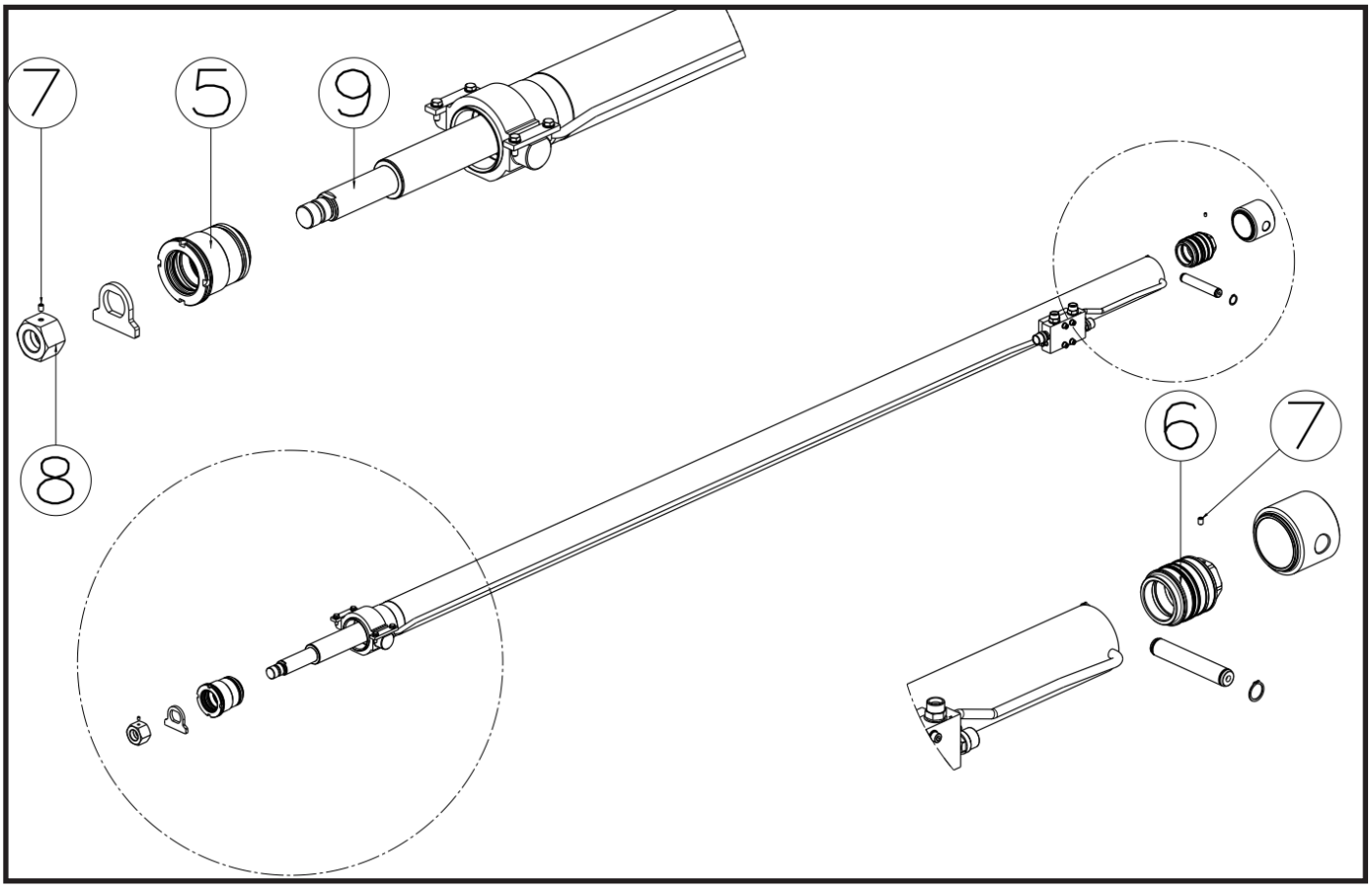

1. Extension Cylinder Cushion Block	2. Extension Cylinder Installation Tube	3. Extension Cylinder Valve Plate
4. Extension Cylinder Tube Back	5. Extension Cylinder Grooves	6. Extension Cylinder Piston
7. Set Screw	8. Nut M40x2	9. Extension Cylindir Shaft

Compensator Cylinder

The Compensator Cylinder is used to balance the angle and position of the boom. The main functions of the kompensator cylinder are as follows;

- **Balancing and Stability:**

The compensator cylinder ensures that the boom remains stable and stable in different positions. When the boom is extended or raised, the machine may be unbalanced due to a change in the load center. The compensator cylinder compensates for these changes and maintains the stability of the telehandler.

- **Keeping the Load Straight:**

When the telehandler raises or extends the boom, the compensator cylinder ensures that the load remains in a horizontal position. This is especially important when transporting sensitive loads. It provides safe transportation by preventing the load from tilting or tipping over.

- **Security:**

The compensator cylinder provides safety to avoid dangerous situations that may occur during load handling. Keeping the boom at the right angle and position ensures the safety of the operator and bystanders.

Working Principle

It works as part of the hydraulic system and is designed to balance the position of the boom.

- **Hydraulic Pressure:**

The compensator cylinder uses the pressure cylinder from the hydraulic pump. When the operator gives the command to raise or extend the boom, the hydraulic fluid is directed to the comppensator cylinder.

- **Piston Displacement:**

The hydraulic fluid exerts pressure on both sides of the piston inside the comppensator cylinder. This pressure difference makes the piston move. Piston. Load the movement by adjusting the position of the boom. It helps to keep it balanced.

- **Compensation Mechanism:**

The Compensator cylinder constantly monitors the angle and position of the boom and makes adjustments as needed. This is usually an automated process and takes place without the need for operator intervention. The cylinder detects pressure changes corresponding to the movement of the boom and ensures that the load remains balanced.

- **Adjusting Valves:**

The valves located in the hydraulic system ensure the correct operation of the compensator cylinder. These valves control the flow of hydraulic fluid and regulate pressure. It is also used to provide safety in the event of an overload.

- **Constant Balancing:**

As the boom moves (extended or raised), the compensator cylinder makes continuous adjustments to compensate for these movements. This maintains the stability of the telehandlers and ensures safe transport of the load.

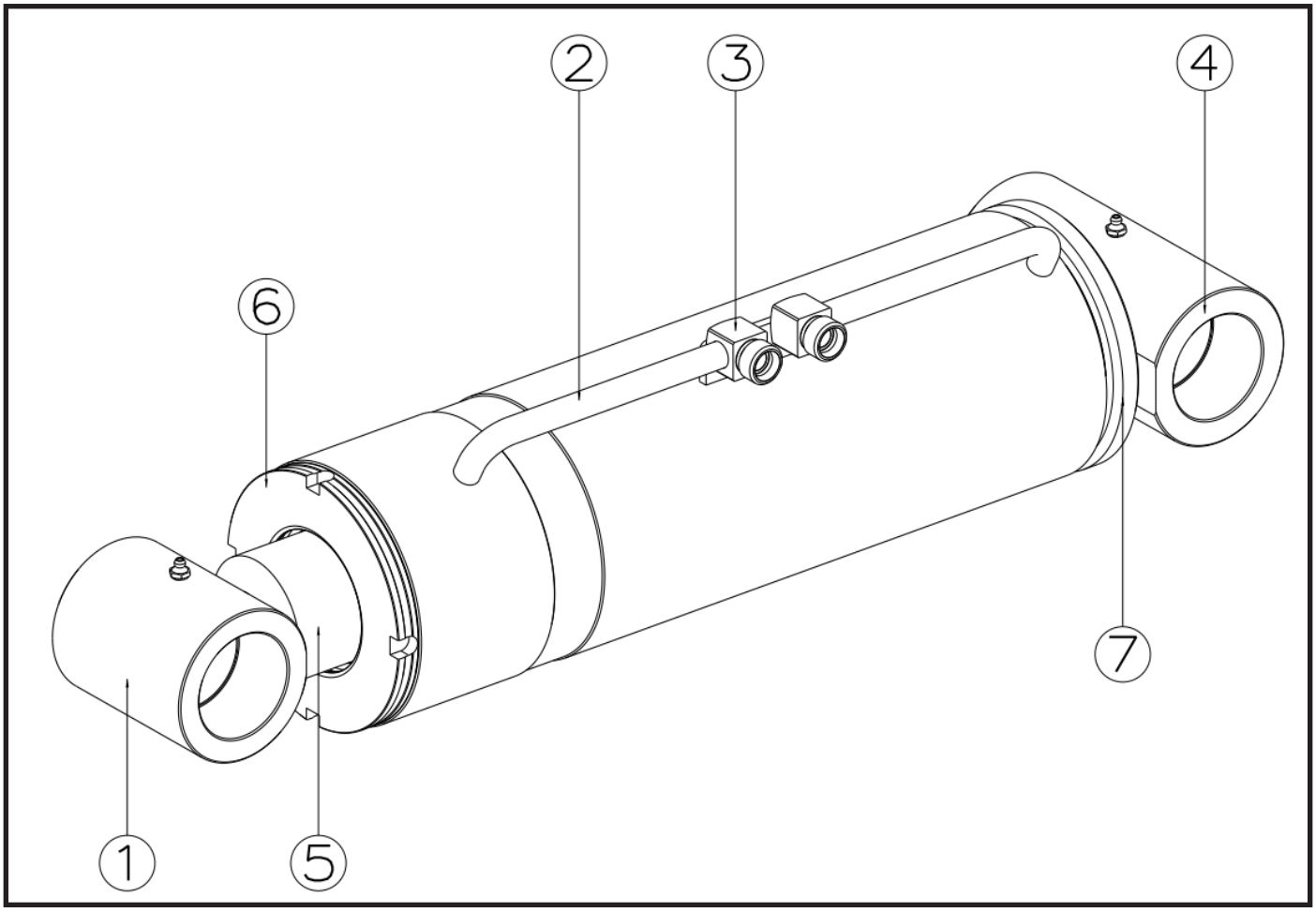

1. Cylinder Bushing	2. Hydraulic Installation Tube	3. M24x1.5 Male Adaptor
4. Cylinder Bushing	5. Extension Cylinder Shaft	6. Extension Cylinder Grooves
7. Extension Cylinder Tube Back		

Lift Cylinder

The Lift Cylinder performs the function of raising and lowering the boom. This cylinder controls the vertical movements of the boom and allows to raise and lower loads to the desired height.

- **Raising and Lowering the Boom:**

The lift cylinder moves the boom up and down using hydraulic pressure. This makes it possible to lift loads off the ground and position them at a certain height.

- **Load Carrying Capacity:**

The lifting cylinder determines the maximum load capacity that the telehandler can handle. A powerful lifting cylinder ensures that heavier loads are lifted safely.

- **Precise Control:**

Thanks to the hydraulic system and valves, the operator can precisely control the movements of the boom. This ensures that loads are placed and transported correctly.

- **Versatility:**

The lifting cylinder allows the telehandler to work at different heights.

Working Principle

- **Pressure of Hydraulic Fluid:**

When the operator gives a command via the control panel, the hydraulic pump is activated and directs the hydraulic fluid to the lift cylinder under pressure. The pressure of the hydraulic fluid acts on the piston inside the cylinder.

- **Piston Displacement:**

The hydraulic fluid exerts pressure on one side of the cylinder, pushing the piston upward. This pressure difference moves the piston and lifts the boom up. This process continues until the operator raises the boom to the desired height.

- **Release of Pressure:**

When the operator wants to lower the boom, the valves in the hydraulic system open and allow the hydraulic fluid to flow back. This makes the piston move downwards and the boom descends.

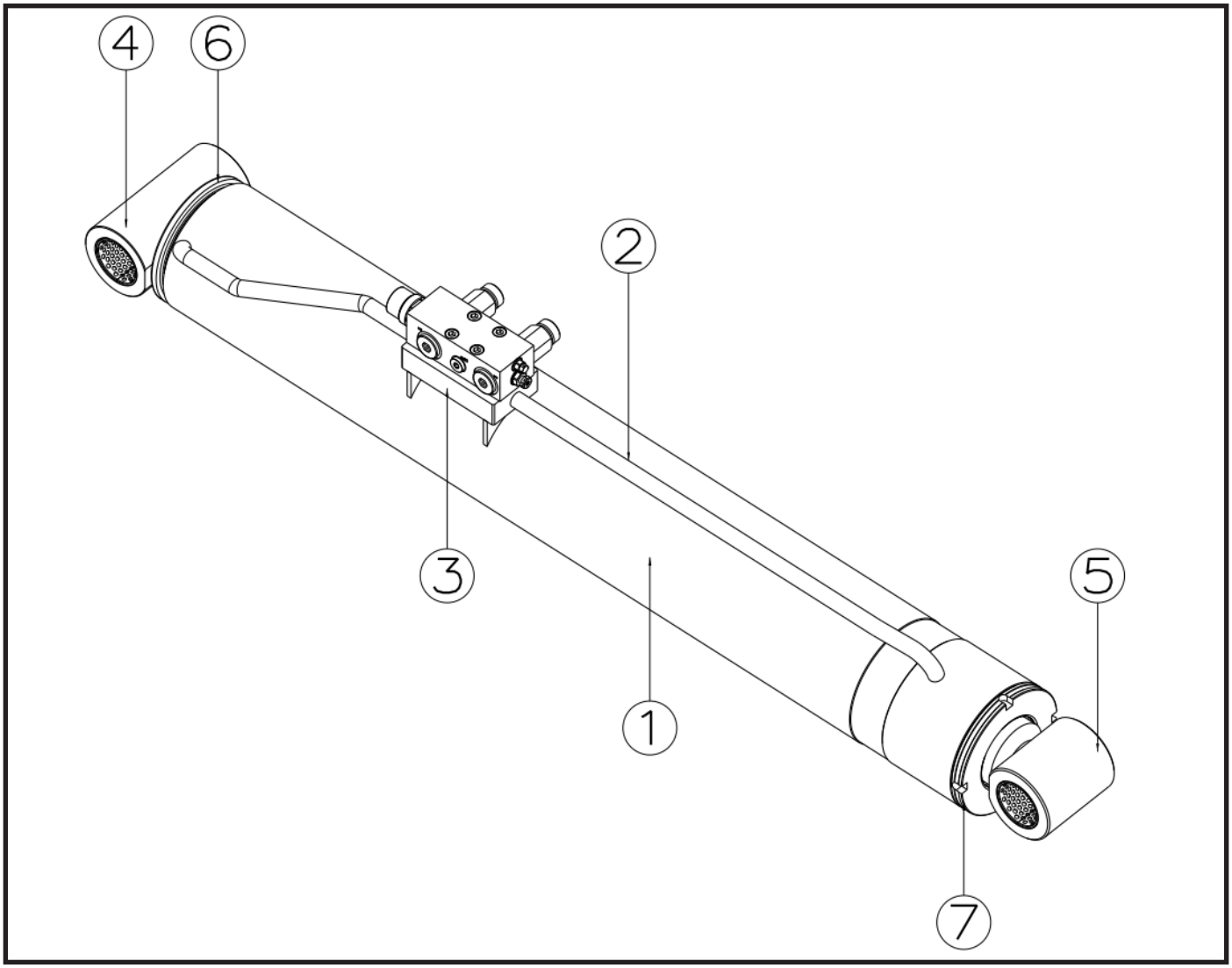

1. Cylinder Tube	2. Hydraulic Installation Tube
3. Cylinder Valve Plate	4. Cylinder Bushing
5. Cylinder Bushing	6. Cylinder Grooves
7. Cylinder Tube Back	

Tilt Cylinder

The Telehandler Tilt Cylinder is a hydraulic cylinder that allows the telehandler to tilt its fork at certain angles

This cylinder helps to balance the load and lift it at various angles. The tilt cylinder allows the operator to place and control the load more precisely.

Working Principle

- **Hydraulic Fluid Pressure:**

The telehandler operator uses a joystick or knob to control the tilt cylinder. This control allows the hydraulic pump to direct the pressurized hydraulic fluid to the tilt cylinder.

- **Cylinder Displacement:**

The hydraulic fluid exerts pressure on one side of the piston inside the tilt cylinder. This pressure moves the piston forward or backward.

- **Tilt Movement:**

The piston movement allows the Telehandler attachment or platform to tilt. When the piston is pushed forward, the attachment tilts upwards, and when retracted, it tilts downwards.

- **Control and Balancing:**

By using the joystick, the operator can precisely control the movement of the tilt cylinder. This ensures that the load is transported and placed in a balanced manner. Hydraulic valves and control mechanisms allow the movement to be slowed down or stopped, ensuring a safe and controlled operation.

- **Reverse:**

When the controller is released or moved in the opposite direction, the hydraulic fluid is retracted and the tilt cylinder returns to its original position. This allows the piston to return to the starting point and bring the shot to a straight position.

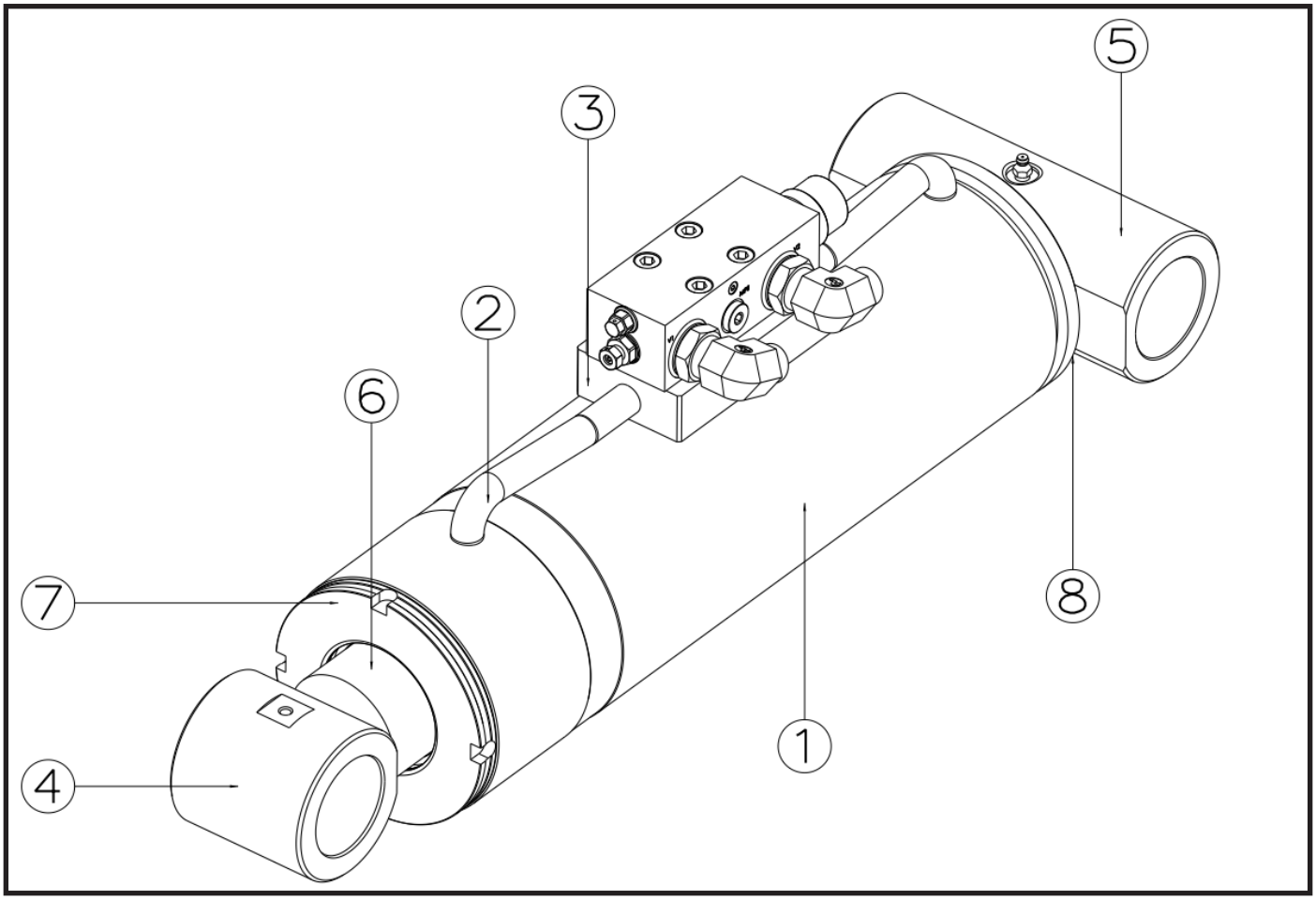

1. Cylinder Tube	2. Hydraulic Installation Tube
3. Cylinder Valve Plate	4. Cylinder Bushing
5. Cylinder Bushing	6. Cylinder Shaft
7. Cylinder Grooves	8. Cylinder Tube Back

1.1. Fuel Tank

The fuel tank is the section that stores the fuel necessary for the operation of the Telehandler. The functions of the fuel tank are;

- **Fuel Storage:** Safely stores the fuel needed to start and maintain the Telehandler's engine.
- **Fuel Supply:** It provides the fuel required for the operation of the engine in a continuous and regular manner.
- **Fuel Protection:** Protects the fuel from external factors, contamination and evaporation.

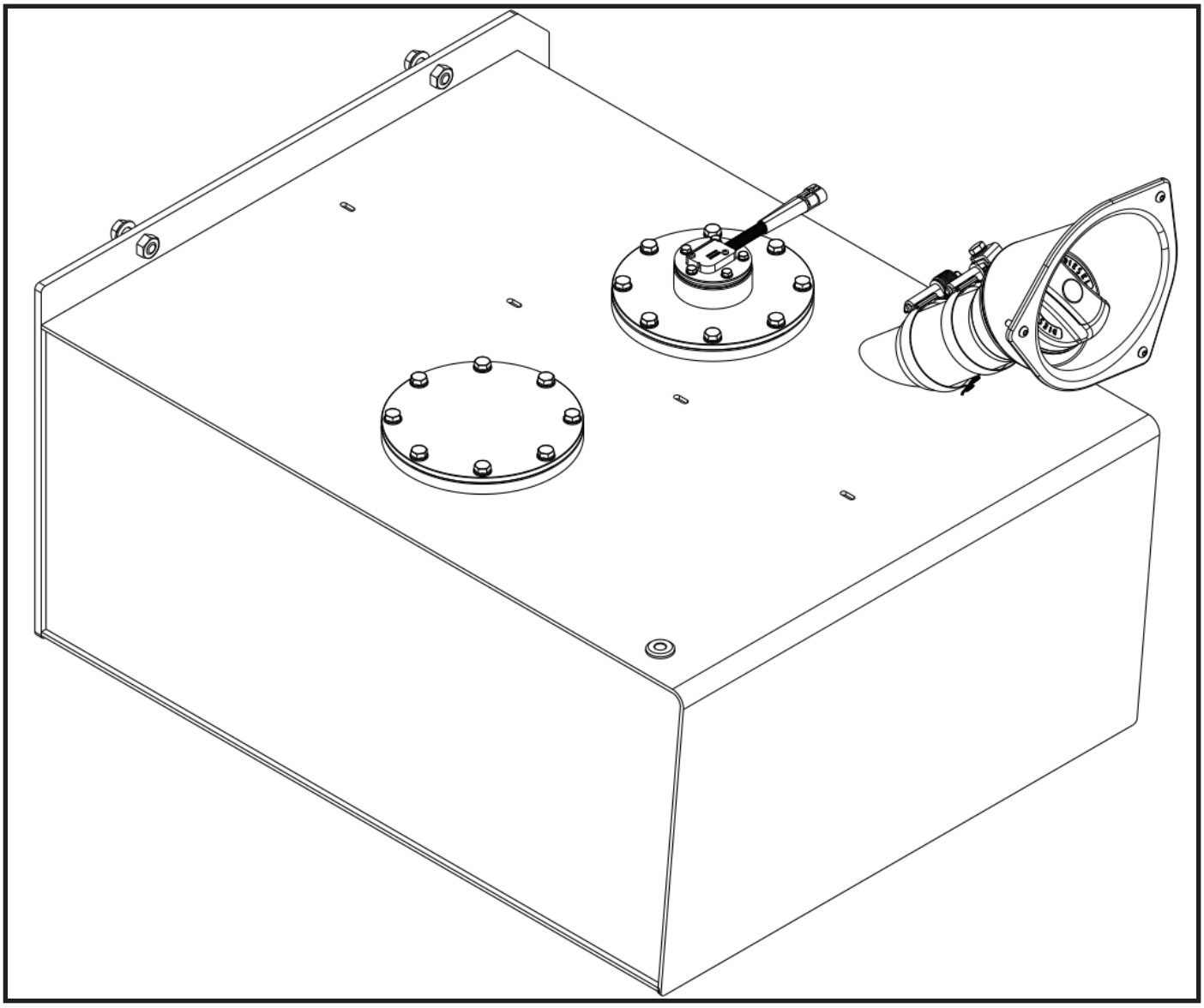

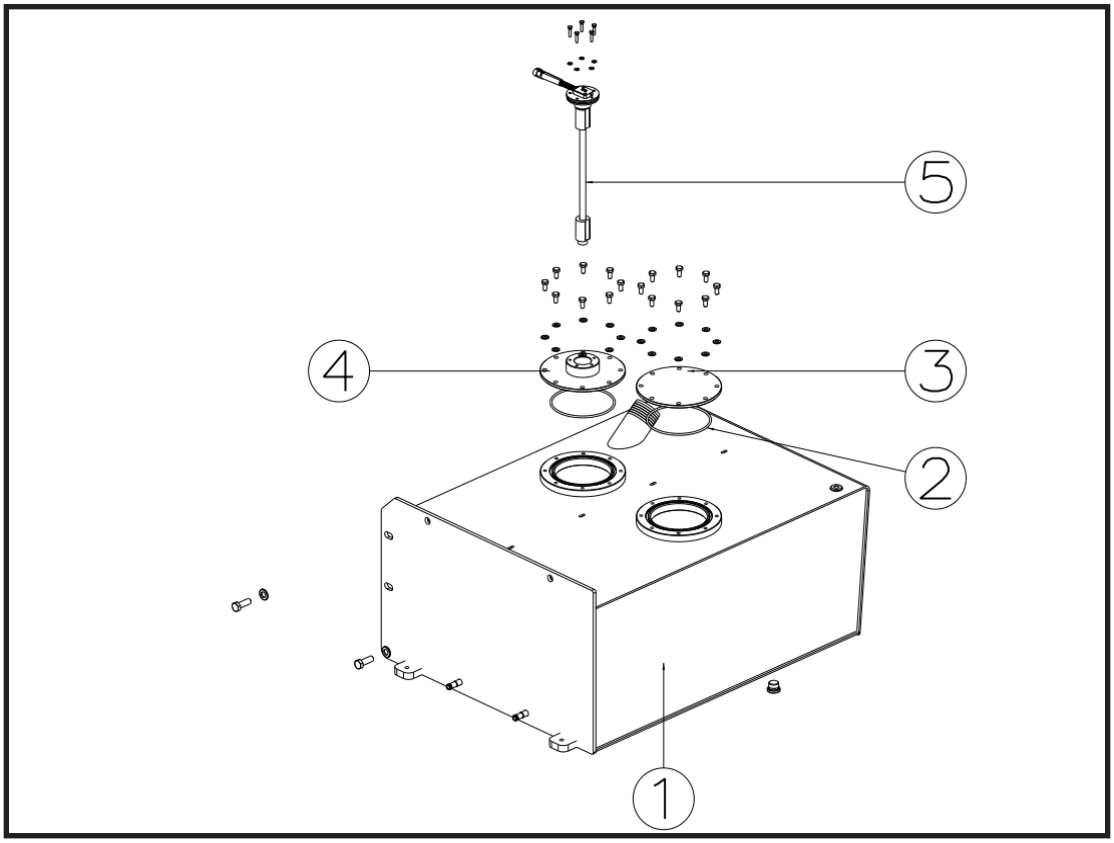

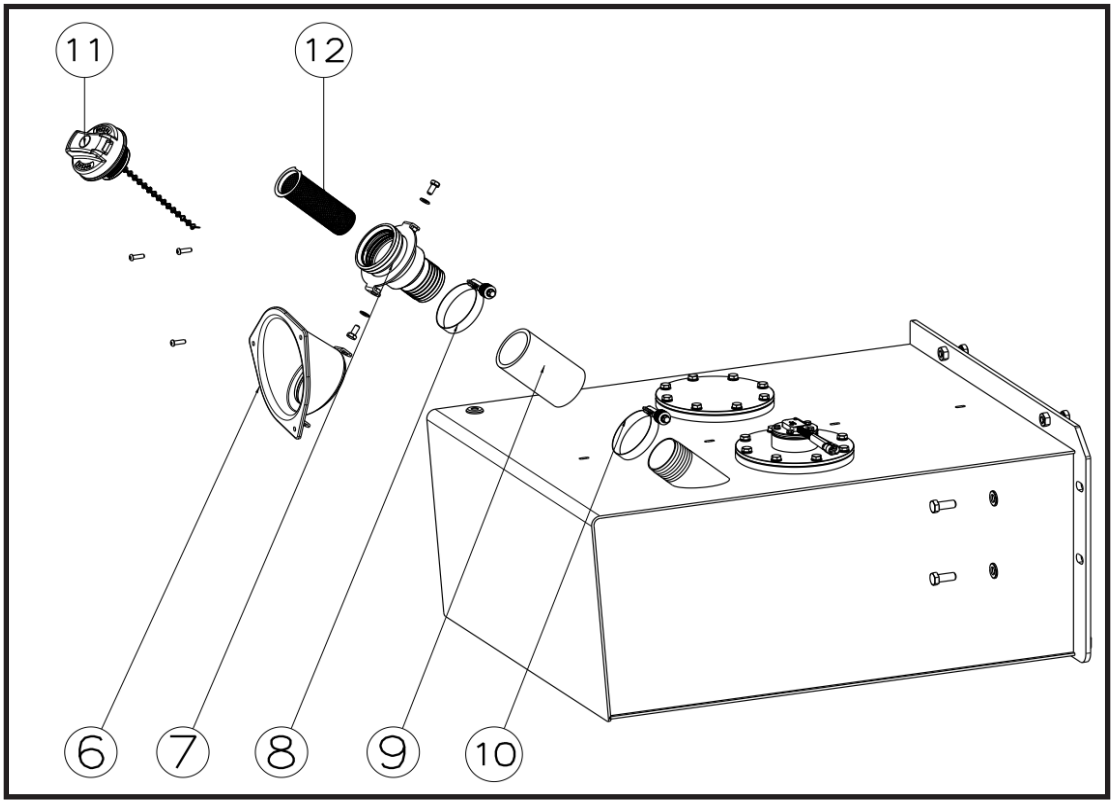

1. Fuel Tank	2. O-Ring 130x4
3. Flange	4. Float Connection Cap
5. Fuel Level Sensor	6. Filler Neck
7. Filler Neck	8. Clamp
9. Rubber	10. Clamp
11. Fuel Tank Cap	12. Filter

7.7.Hydraulic Tank

The hydraulic tank is the section used to store and supply hydraulic oil to the hydraulic system of the Telehandler. The functions of the hydraulic tank are;

- **Hydraulic Fluid Storage**: Stores the hydraulic oil required for the operation of the hydraulic system.
- **Hydraulic Fluid Supply**: Provides hydraulic fluid to hydraulic cylinders and motors in the system through hydraulic pumps.

The hydraulic tank provides the hydraulic power necessary for the Telehandler to perform lifting, extending, rotating and other hydraulic functions.

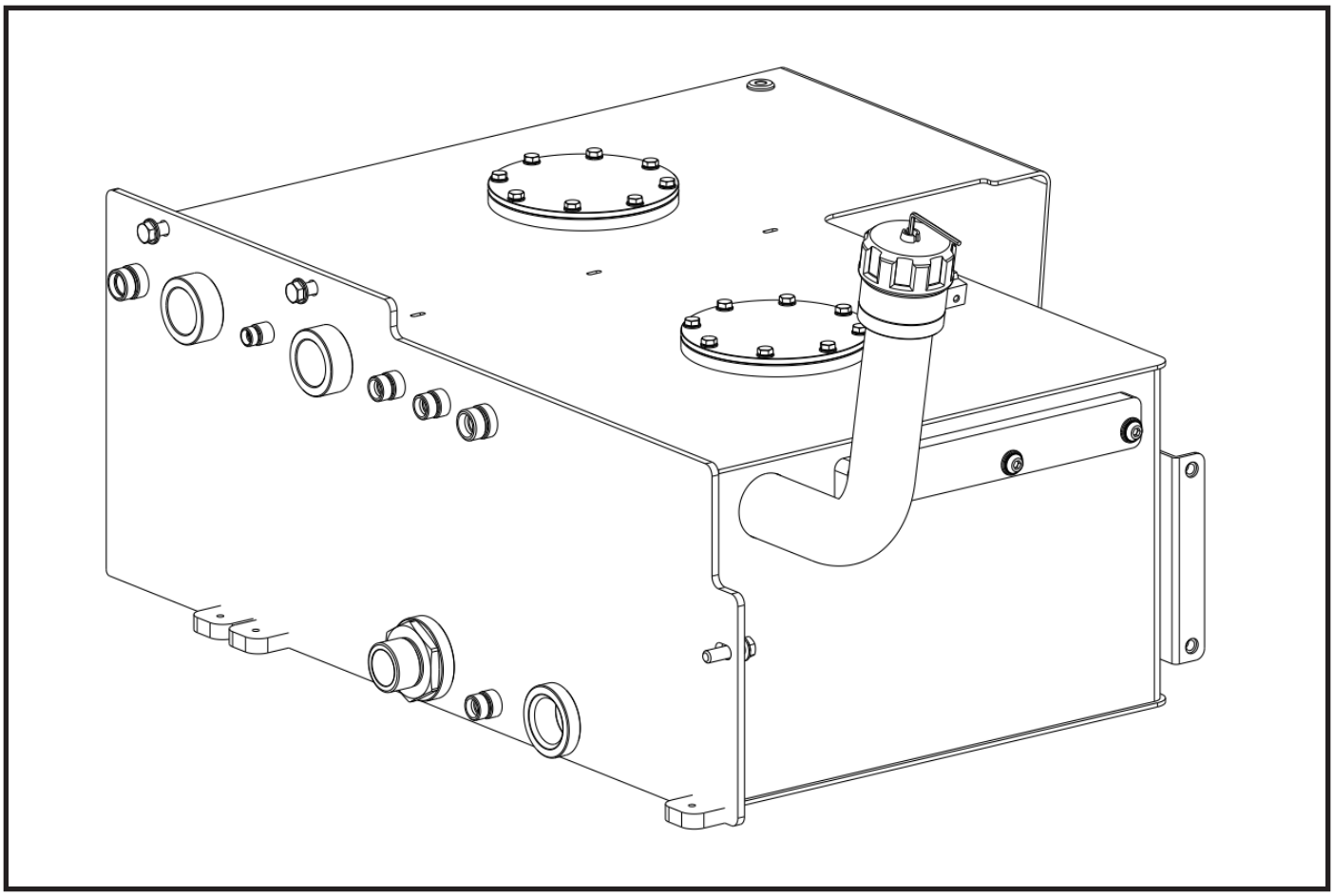

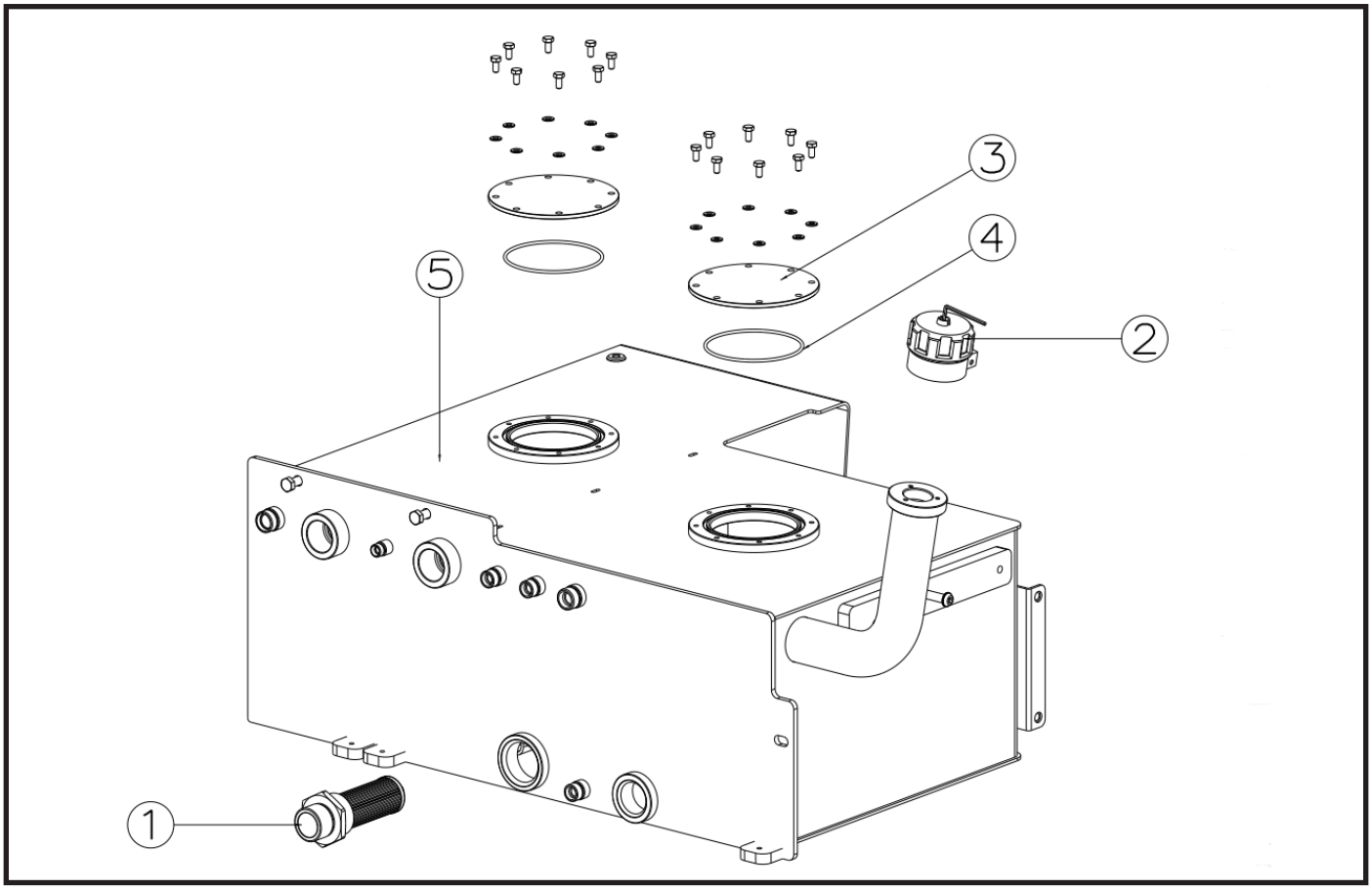

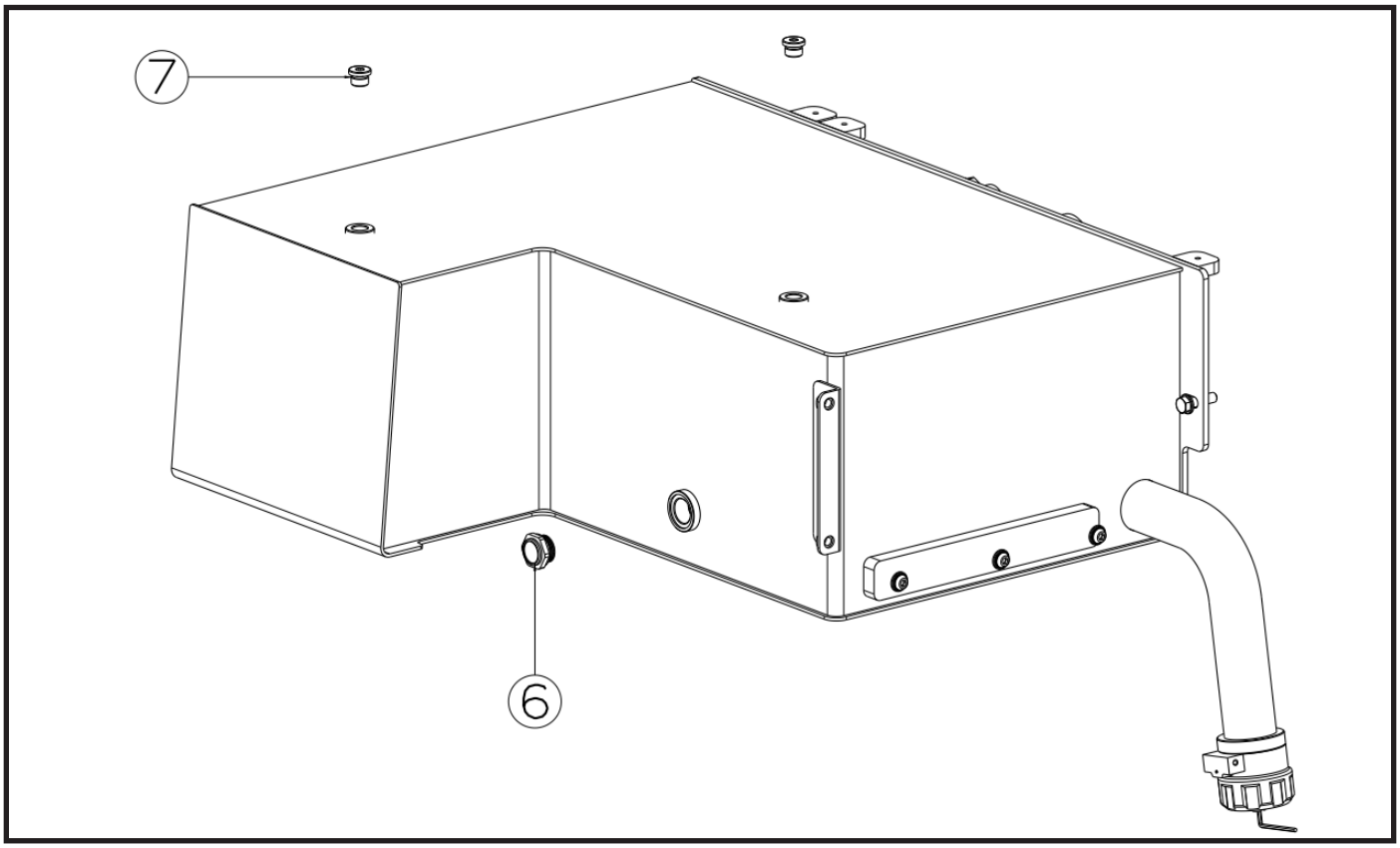

1. Suction Filter	2. Air Breather
3. Flange	4. O-Ring
5. Hydraulic Tank	6. Hydraulic Level Gauge
7. Blanking Plug for Ports	

Air Breather

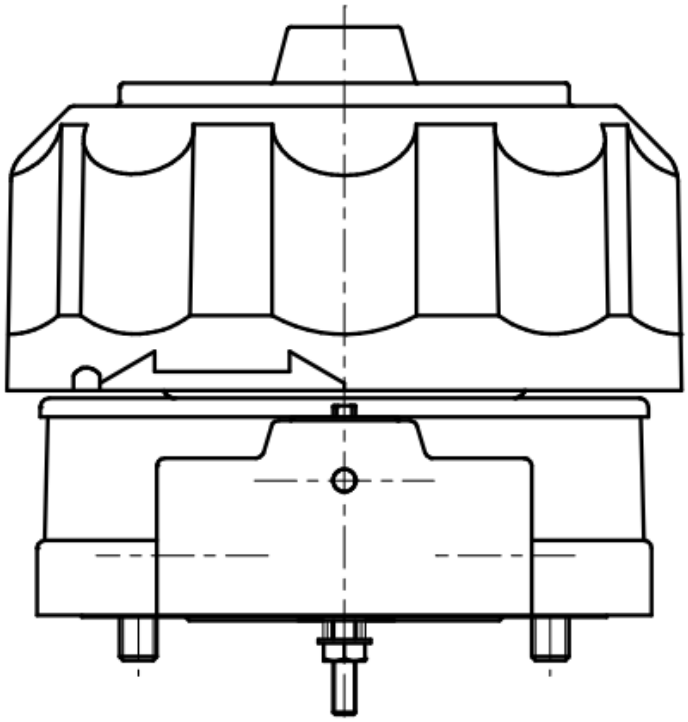

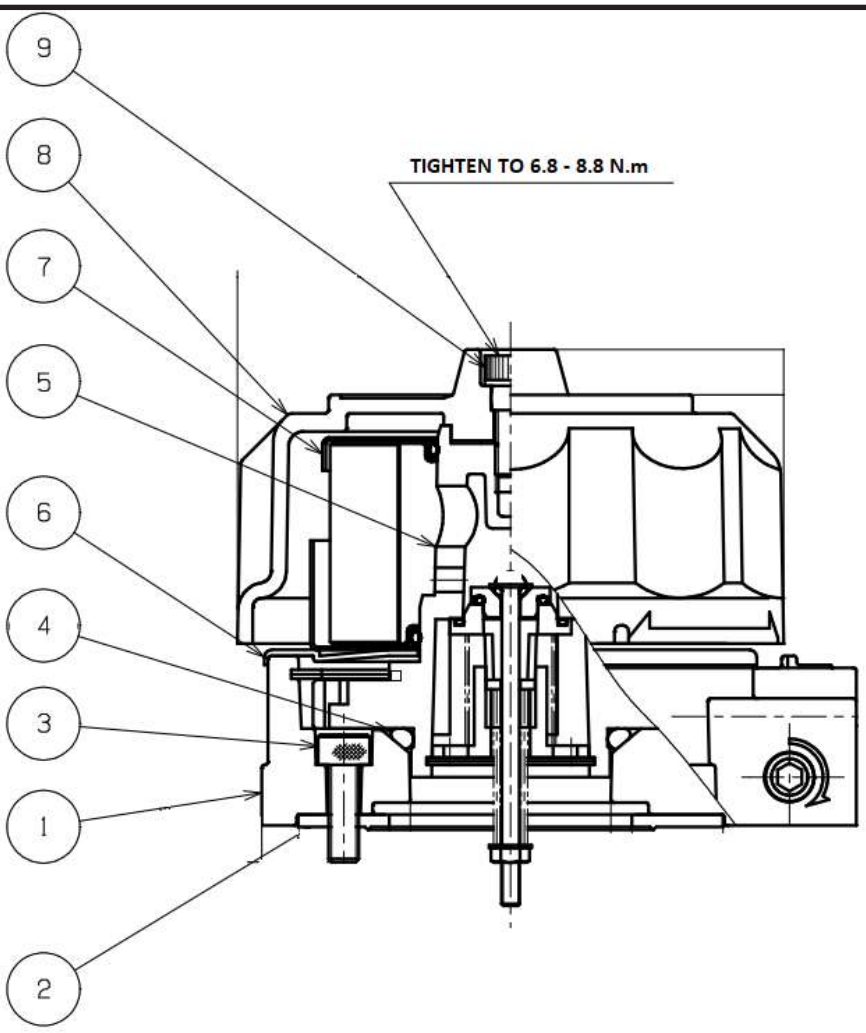

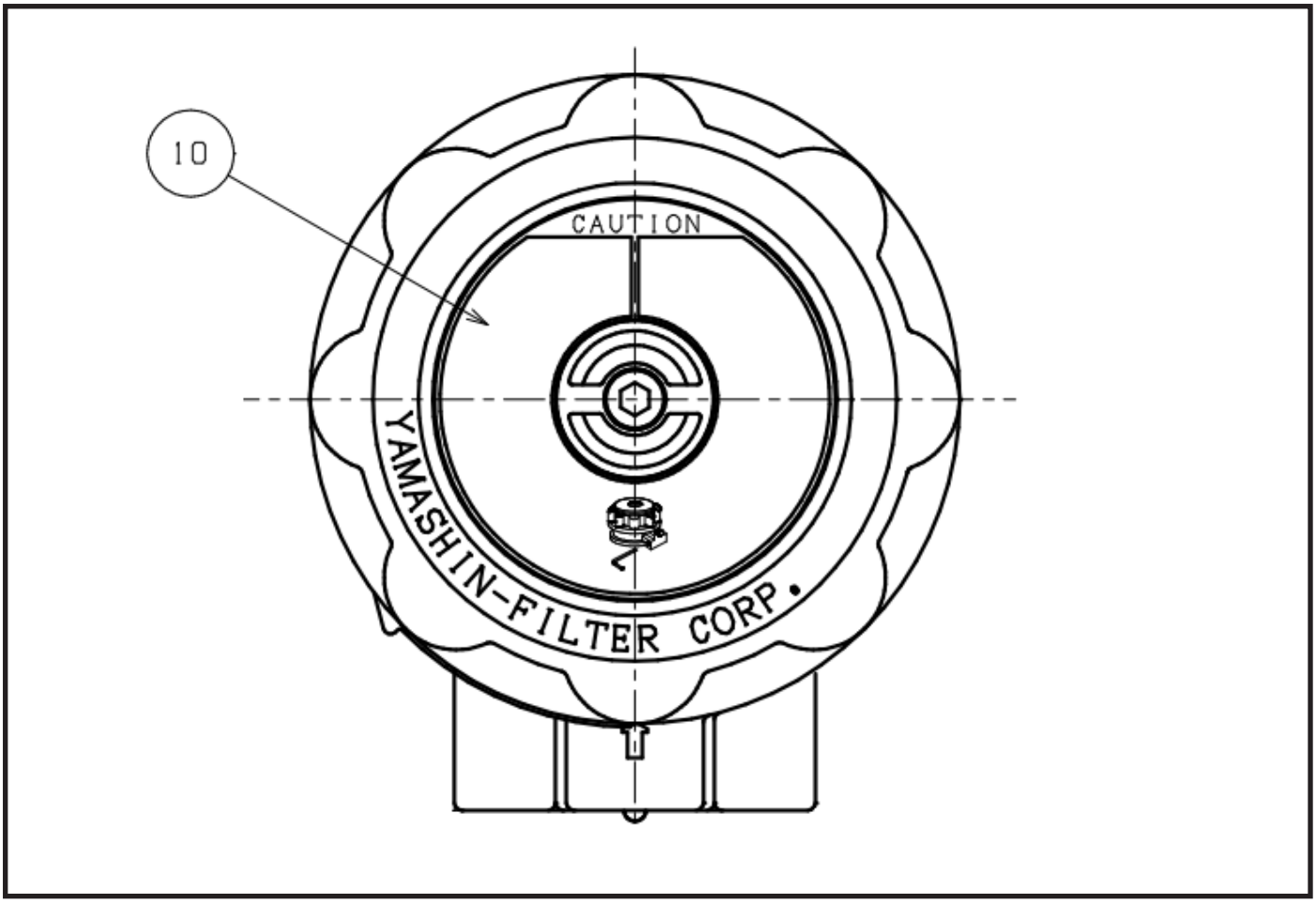

ITEM	NAME OF PART
1	Case Ass'y
2	Packing
3	Bolt
4	O-Ring
5	Bayonet Ass'y
6	Cover
7	Filter Element
8	Cover
9	Bolt
10	Caution Plate

SPECIFICATION		
Filtration Rating	10 μ	
Valve Setting Pressure	Inlet	0.004 MPa (at 1 L/min)
	Delivery	0.07 MPa (at 1 L/min)
Temperature Range	-4°F (-20°C) – 212 °F (100°C)	

Hydraulic Scheme

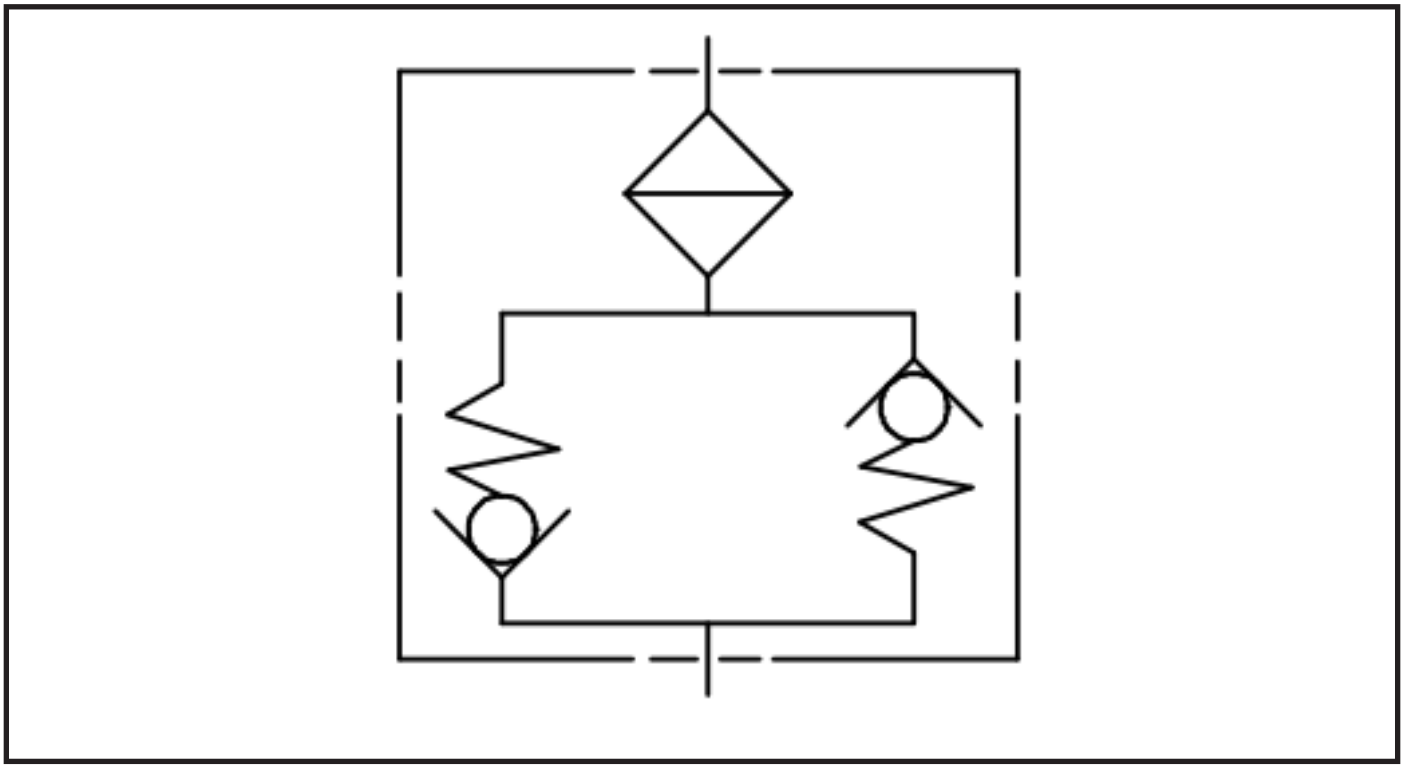

7.8.Air Conditioner

Introduction

Refrigerant

Refrigerants are the basic ingredient of all air conditioning systems and are used to transfer the heat energy around the system. Refrigerant type R134a is used in the air conditioning system, its full chemical name is Tetraflouroethane (CH□ FCF□) R134a is a HFC (hydrFlouroCarbon) and is non-toxic, non flammable and non-explosive at normal atmospheric temperature and pressure. It can be flammable under certain pressure and air mixtures.

Refer to the safety procedures at the front of this section before handling refrigerant.

Good installation practice is required to avoid the release of refrigerant into the atmosphere. Refrigerant R134a contains no chlorine and has an Ozone Depleting Potential (ODP) of zero, and a Global Warming Potential (GWP) of 0.1.

Refrigerant Oil

The system requires a PAG type refrigerant oil to lubricate the compressor. The oil mixes with the refrigerant and is carried around the system.

It is important that the recommended grade of refrigerant oil is used. Mineral oil not suitable for R134a refrigerant systems. Do not mix oil types.

The compressor is supplied with an oil charge, but additional oil (2.24 in. (56.8 mililitres) will be required when the receiver drier is replaced. The oil is added to the compressor through the of filling plug before the evacuation procedure is started.

Only use fresh, unused oil. Oil that has been exposed to the air will have absorbed water.

Technical Data

Binary Switch Settings

Low Pressure: 2.06 bar (29.87 lbf in ², 2.10 Kgf cm ²)

High Pressure: 27.5 bar (398 lbf in ², 28.0 Kgf cm ²)

Thermostatic Switch Settings

Cut out: 32,0°F to 34,0°F (0°C to 1,1°C)

Cut in: 44,0°F to 46,0 °F (6,6°C to 7,7°C)

Refrigerant

850 grammes of R134a Gas

Ozone Depleting Potential (ODP): Zero

Global Warming Potential (GWP) 0.1

Pressure Control

Check that the high and low pressure figures on the pressure gauges correspond to the reference values. You can see the reference values below.

Referance Values

Table 1		
Expansion valve air conditioning systems		
External Temperature (°F/°C)	**High Pressure (psi/bar)**	**Low Pressure (psi/bar)**
59°F (15°C)	116-152 psi (8,0 – 10,5 bar)	8.7-17.4 psi (0,6 – 1,2 bar)
68°F (20°C)	116-186 psi (8,0 – 12,8 bar)	8.7-17.4 psi (0,6 – 1,2 bar)
79°F (26°C)	152-196 psi (10,5 – 13,5 bar)	8.7-20.3 psi (0,6 – 1,4 bar)
90°F (32°C)	228-283 psi (15,7 – 19,5 bar)	8.7-29 psi (0,6 – 2,0 bar)
99°F (37°C)	239-326 psi (16,5 – 22,5 bar)	17.4-33.3 psi (1,2 – 2,3 bar)

Low pressure, more at the upper limit of tolerance values	- The compressor is defective. - The suction and pressure sides on the compressor can be inverted. - The expansion valve is blocked with the open side. If the compressor capacity is variable, low pressure but fast pressure changes are seen. - Capacity adjustment valve defective or out of adjustment. - The magnetic coupling on the compressor slipped or opened incorrectly due to pressure.
Low pressure, lower than the lower limit of tolerance values	- Low pressure, lower than the lower limit of tolerance values. - Desiccant filter filled with moisture. - The compressor's capacity regulating valve is blocked at peak output performance. - Thermostat defective.
High pressure, more than the upper limit of tolerance values	- Normal state at extremely high outside temperature (>111°F/44°C). - The temperature change in the capacitor does not work correctly. - The air conditioning system is overfilled. - The air conditioning system is contaminated by air or different gases. - The capacity adjustment valve in the compressor is defective. - There may be blockages in the high-pressure area between the condenser and the compressor or (in expansion valve systems) between the dryer and the evaporator.
High pressure, lower than the lower limit of tolerance values	- Normal state at extremely high outside temperature (>111°F/44°C). - The expansion valve is clogged or blocked. - The air conditioning system is overfilled. - In a low or high pressure area, there is a blockage between the filter and the evaporator. - Compressor defective.

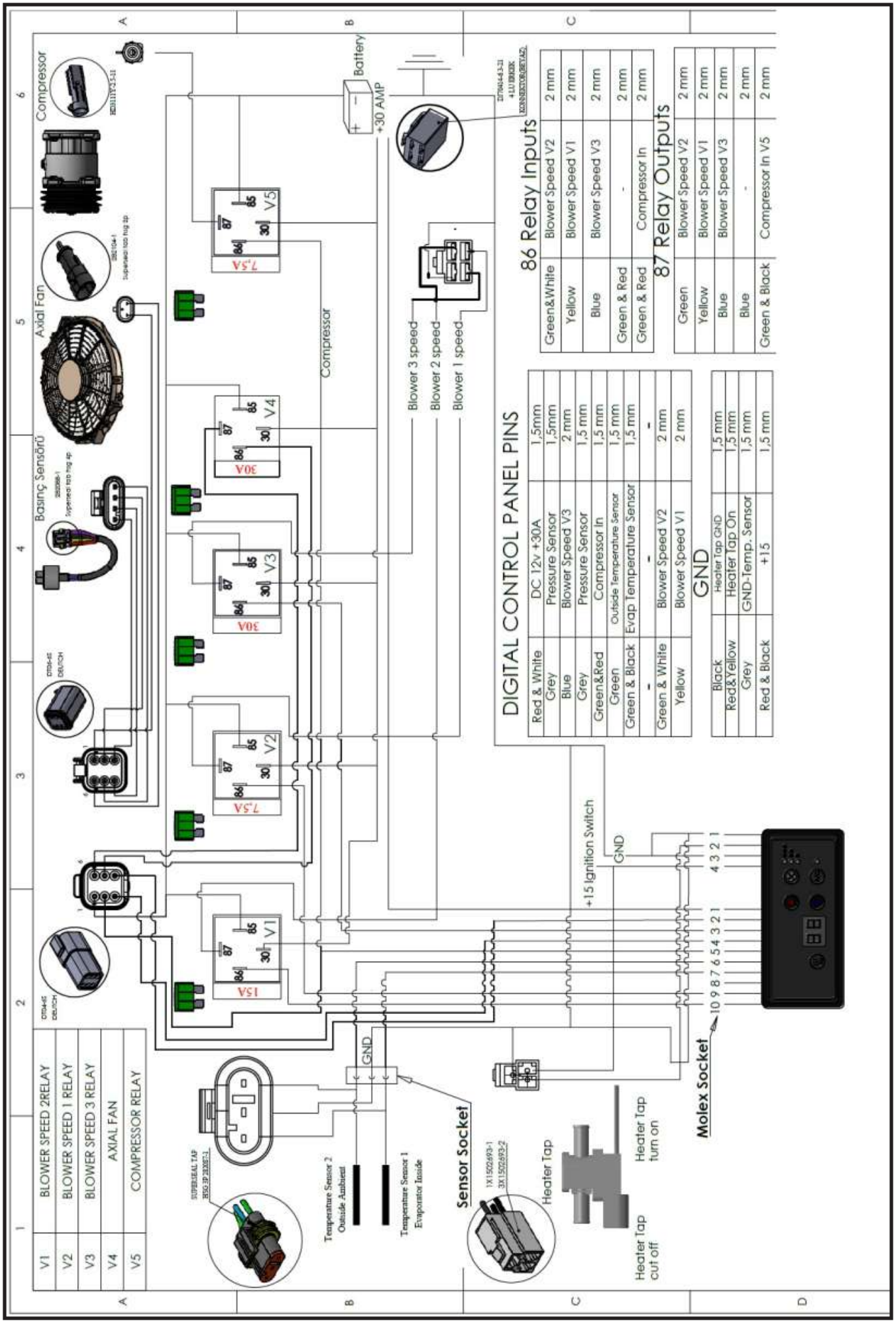
Compressor
Axial Fan
Basinç Sensörü
Battery
+30 AMP
Compressor
Blower 3 speed
Blower 2 speed
Blower 1 speed
V1
V2
V3
V4
V5
15A
7,5A
30A
86 Relay Inputs
Green&White Blower Speed V2 2 mm
Yellow Blower Speed V1 2 mm
Blue Blower Speed V3 2 mm
Green & Red - 2 mm
Green & Red Compressor In 2 mm
87 Relay Outputs
Green Blower Speed V2 2 mm
Yellow Blower Speed V1 2 mm
Blue Blower Speed V3 2 mm
Blue - 2 mm
Green & Black Compressor In V5 2 mm
DIGITAL CONTROL PANEL PINS
Red & White DC 12v +30A 1,5mm
Grey Pressure Sensor 1,5mm
Blue Blower Speed V3 2 mm
Grey Pressure Sensor 1,5 mm
Green&Red Compressor In 1,5 mm
Green Outside Temperature Sensor 1,5 mm
Green & Black Evap Temperature Sensor 1,5 mm
- - -
Green & White Blower Speed V2 2 mm
Yellow Blower Speed V1 2 mm
GND
Black Heater Tap GND 1,5 mm
Red&Yellow Heater Tap On 1,5 mm
Grey GND-Temp. Sensor 1,5 mm
Red & Black +15 1,5 mm
+15 Ignition Switch
GND
10 9 8 7 6 5 4 3 2 1
4 3 2 1
Molex Socket
Sensor Socket
Temperature Sensor 2 Outside Ambient
Temperature Sensor 1 Evaporator Inside
Heater Tap
Heater Tap turn on
Heater Tap cut off
V1 BLOWER SPEED 2RELAY
V2 BLOWER SPEED 1 RELAY
V3 BLOWER SPEED 3 RELAY
V4 AXIAL FAN
V5 COMPRESSOR RELAY

Part Description

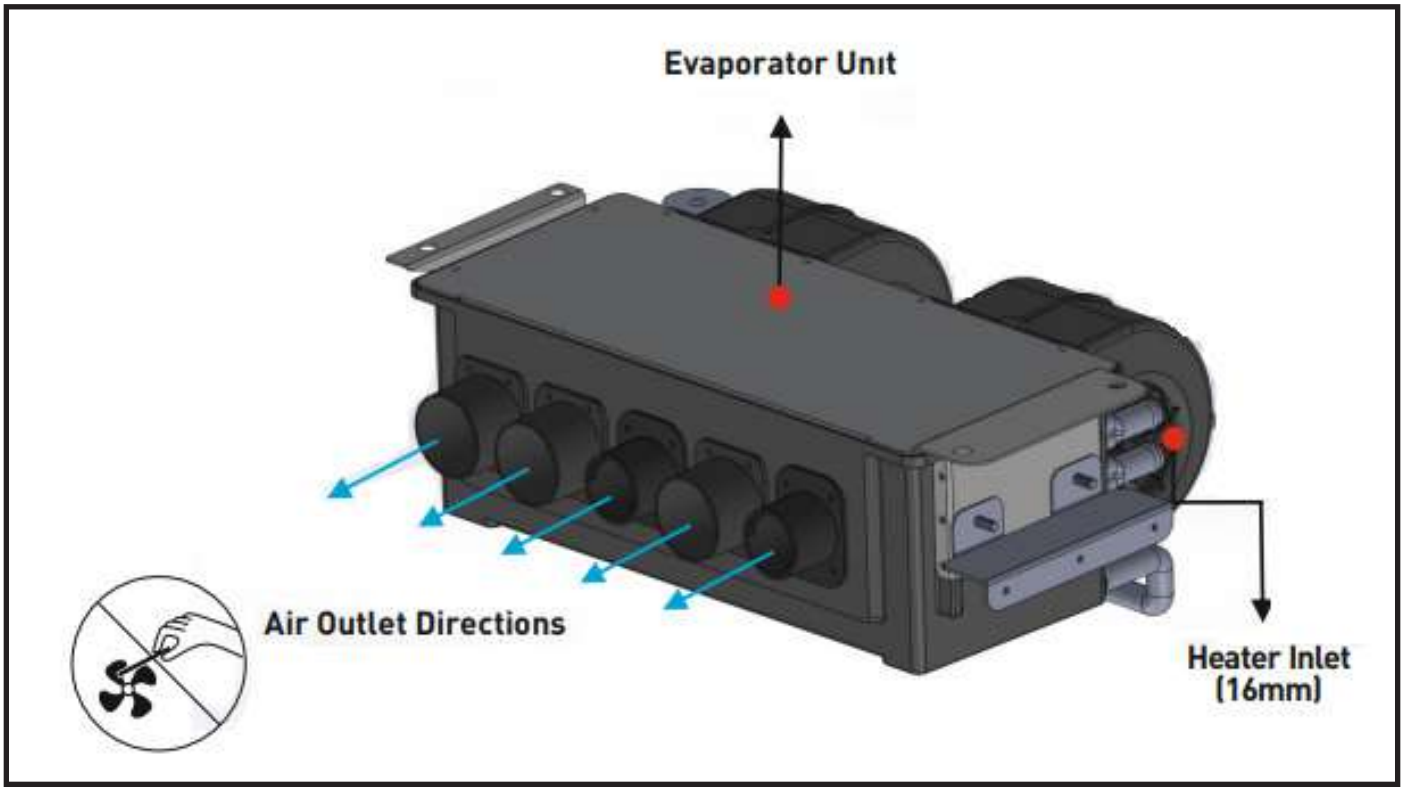

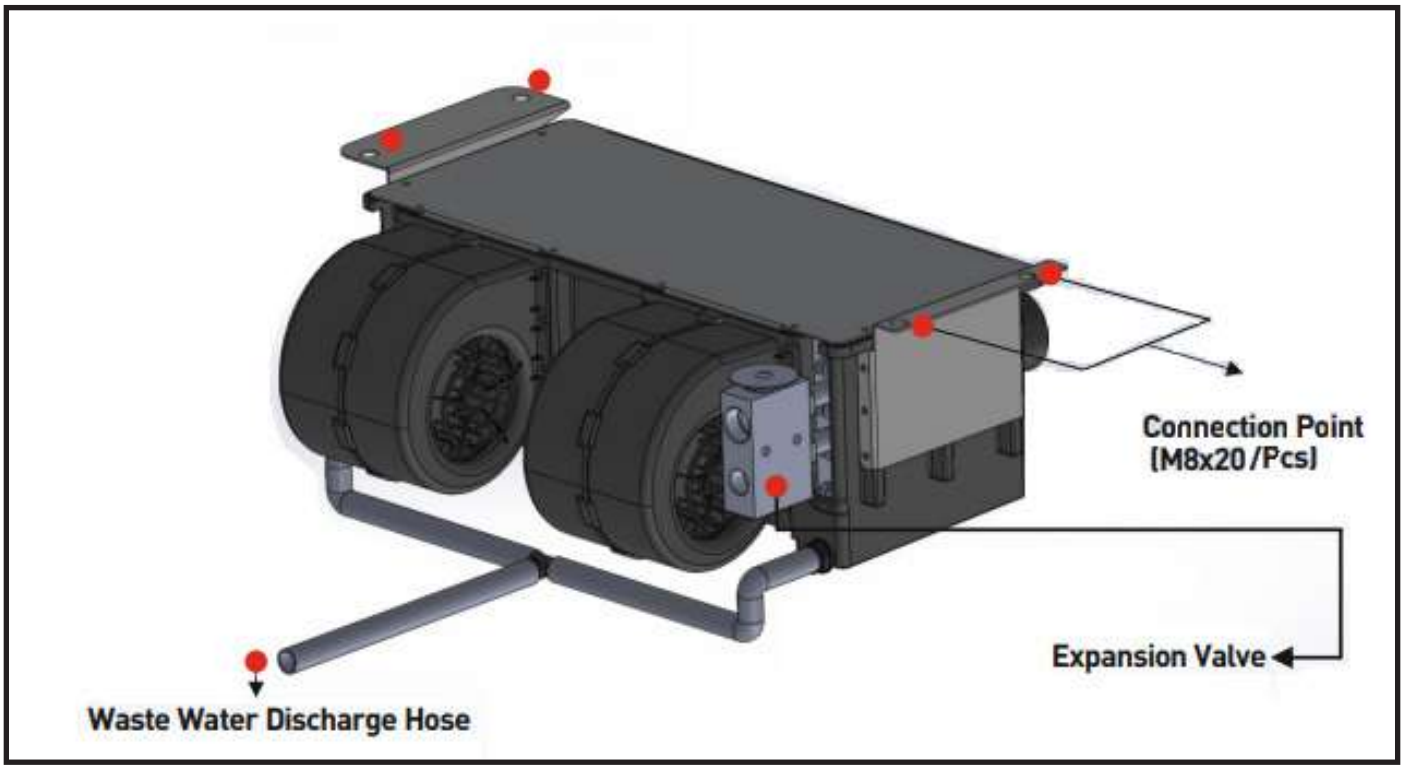

Digital Control Panel User Manual

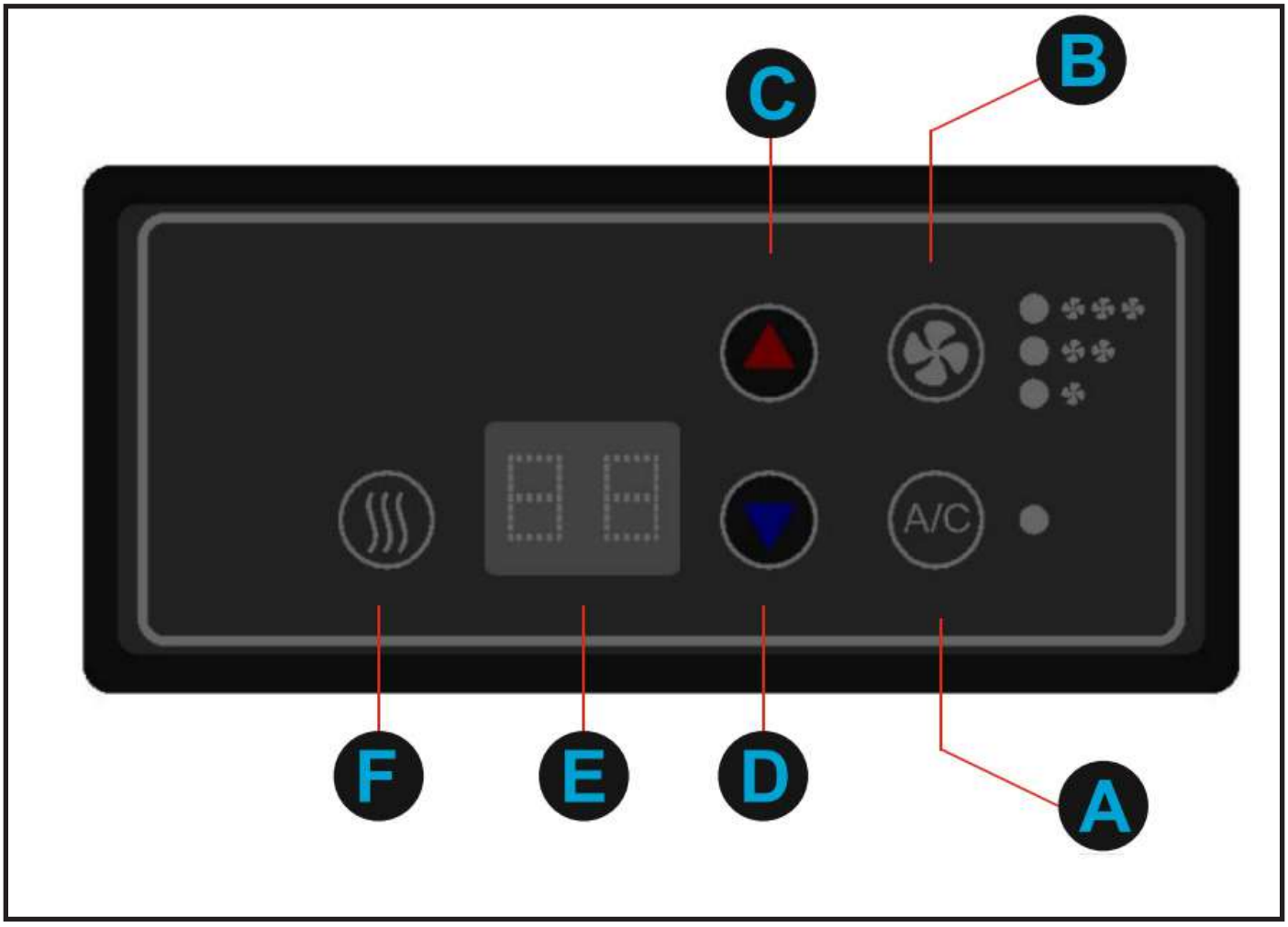

A. Air conditioner open /close the button.
B. Every being pressed, fan adjustment buton can be ıncreased the velocity.
C. Increasing button, ıt adjust from E to increase rate of degree.
D. Reduction button, ıt adjust from E to reduce rate of degree.
E. Digitial indicator which demonsrate degree of temperature.
F. Heater open and close button.

Open the System

At first you should oparete the engine and then you press this button According to your request, you should follow the following commands to start air.

Operation the Air Conditioner

- Before the air conditioner is operated, desired temperature degree should be setting in cabin
- Press the A/C button(A). Led light start to burn. Preset temperature value can be seen on digital screen.
- If the last set rates which were again adjusted want to change you enter the value which is wanted with helping increasing and reducing button A and C which demonstrated
- Wind speed adjust acording to reguest with B which showing by pressing fans button.

Operating the Heater

- Before air conditioner system isn't run inside the cabin which wanting temperature rates should adjust.
- Heater buton is pressed. Led lights which is near the heater buttons begin to light. Temperature rate which previously adjusted see on the screen.
- If the last set rates which were again adjusted want to change you enter the value which is wanted with helping increasing and reducing button A and C which demonstrated
- Wind velocity can adjust according to wanting by pressing fans buttons which showing (b).

Operating the Ventilation

At first heater (F) and air conditioner open buton bring to closed condition 2) Fan wind engine that press the fan wind button, the last set rates which were again adjusted want to change you enter the value which is wanted with helping increasing and reducing button A and C which demonstrated can close system step by step from three to zero.

System Closing

- At first heater (F) and air conditioner open buton bring to closed condition
- Fan wind engine that press the fan wind button, the last set rates which were again adjusted want to change you enter the value which is wanted with helping increasing and reducing button A and C which demonstrated can close system step by step from three to zero.

Air Conditioning System General View

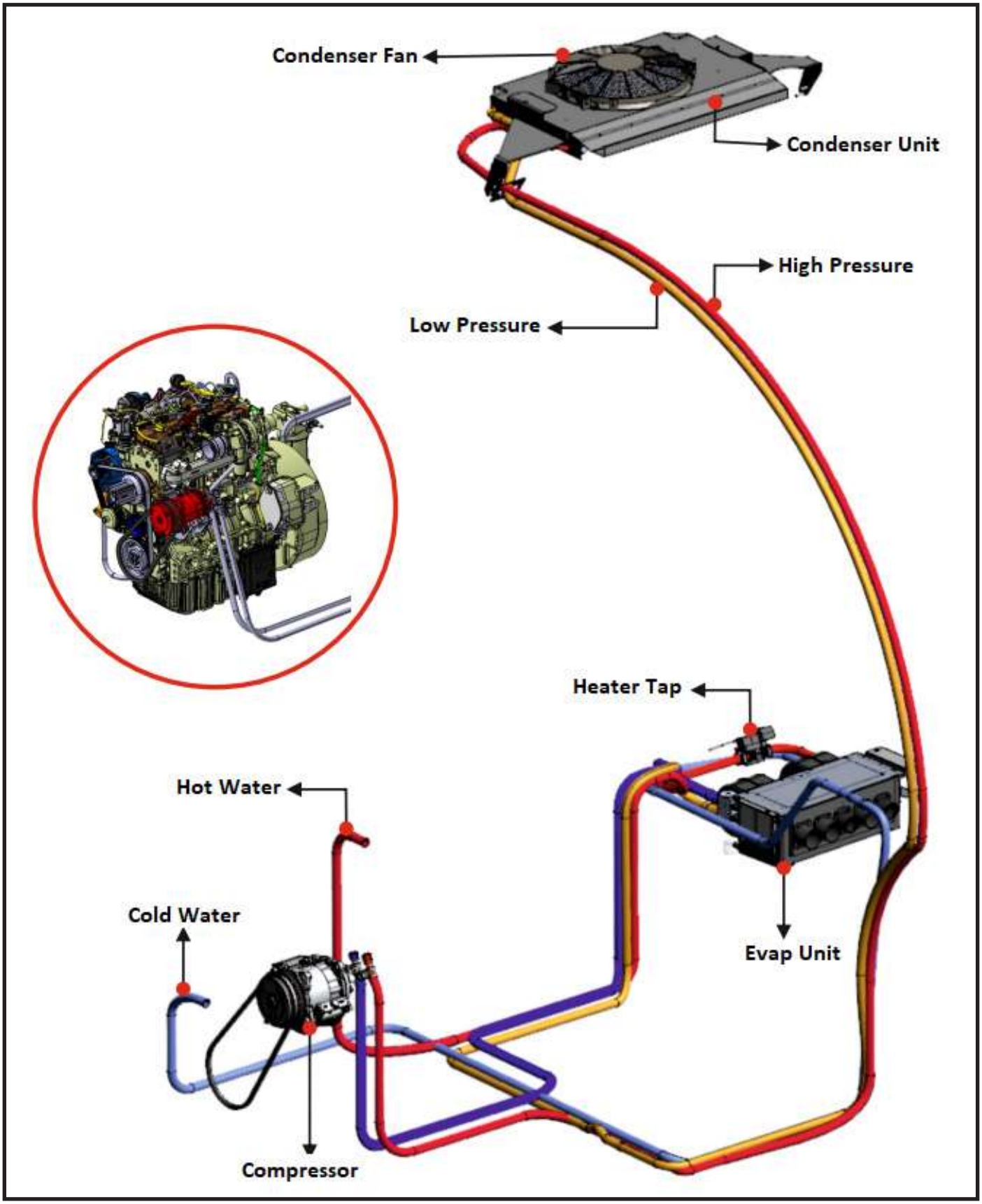

Torque Value

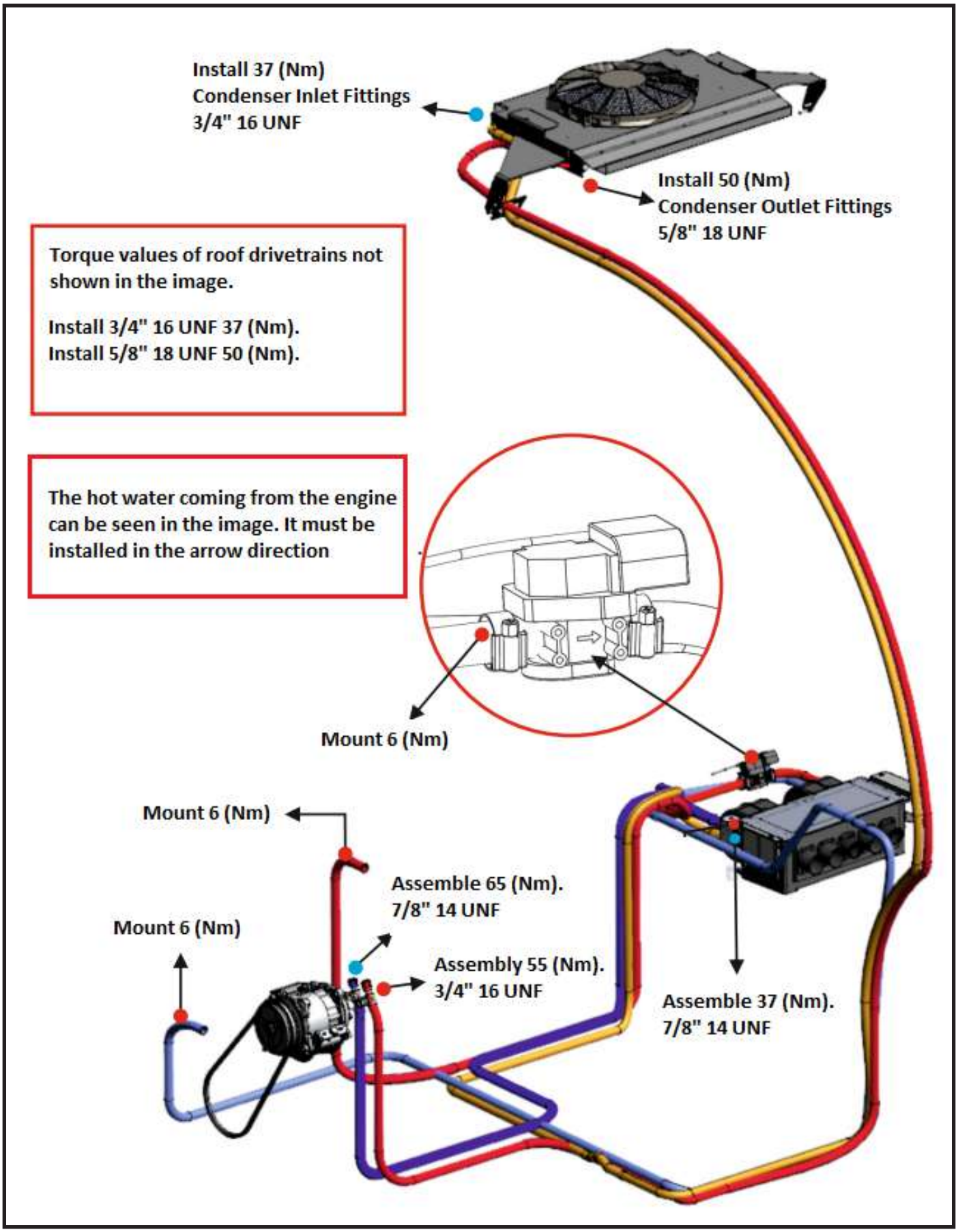

- **Condenser Fan:**

The function of the condenser fan is to accelerate this cooling process by blowing the air passing through the condenser to the outside. In this way, hot air is expelled and the temperature of the refrigerant is reduced, which allows the system to operate efficiently.

- **Condenser Unit:**

Functions of Condenser Unit;

Heat Exchange: It throws the heat taken by the refrigerant from the inside to the external environment.

Cooling Efficiency: By reducing the temperature of the refrigerant, it allows the air conditioning system to work more efficiently.

Ventilation: Reduces the temperature of the cabin where the telehandler operator is located, providing a more comfortable working environment**.**

- **Heater Tap:** Functions of Heater Tap;

Heating Control: When the valve is opened, the engine coolant passes through the heater core and heats the air inside the cabin. When the valve is closed, the flow of coolant is stopped and the heating process ends.

Temperature Setting: According to the desired temperature setting in the air conditioning system, the position of the Heater Tap is changed. This allows the operator to precisely control the temperature inside the cab.

Energy Efficiency: When used correctly, the heater tap can increase energy efficiency because it ensures that heating is carried out only when necessary.

- **Evaporator Unit**

Functions of the Evaporator Unit;

Heat Exchange: The evaporator unit is where the refrigerant absorbs heat by evaporating. The hot air inside the cabinet loses heat and cools down as it passes through the cold surfaces of the Evaporator Unit.

Air Circulation: The evaporator unit provides air circulation inside the cabinet. With the help of the fan, the air is blown back into the cabinet by passing through the evaporator surfaces.

Comfort and Efficiency: Cooling and dehumidifying the air inside the cab allows the operator to work in a more comfortable environment. This, in turn, reduces fatigue during long working hours, increasing productivity.

- **Compressor:** Functions of the Compressor;

Refrigerant Compression: The compressor takes the low-pressure refrigerant in the refrigeration system and makes it high-pressure. This compression process increases the temperature of the refrigerant.

Starting the Refrigeration Cycle: The high-pressure and hot refrigerant exits the compressor and is sent to the condenser unit. Here, the refrigerant cools down, releasing heat to the external environment.

Ensuring Circulation: The compressor ensures that the refrigerant circulates continuously within the air conditioning system. This cycle continues between the evaporator and condenser units so that the air inside the cabinet can be cooled continuously.

Ensuring System Efficiency: The efficient operation of the compressor directly affects the performance of the entire air conditioning system. The proper operation of the compressor ensures that the air inside the cabin is cooled quickly and effectively.

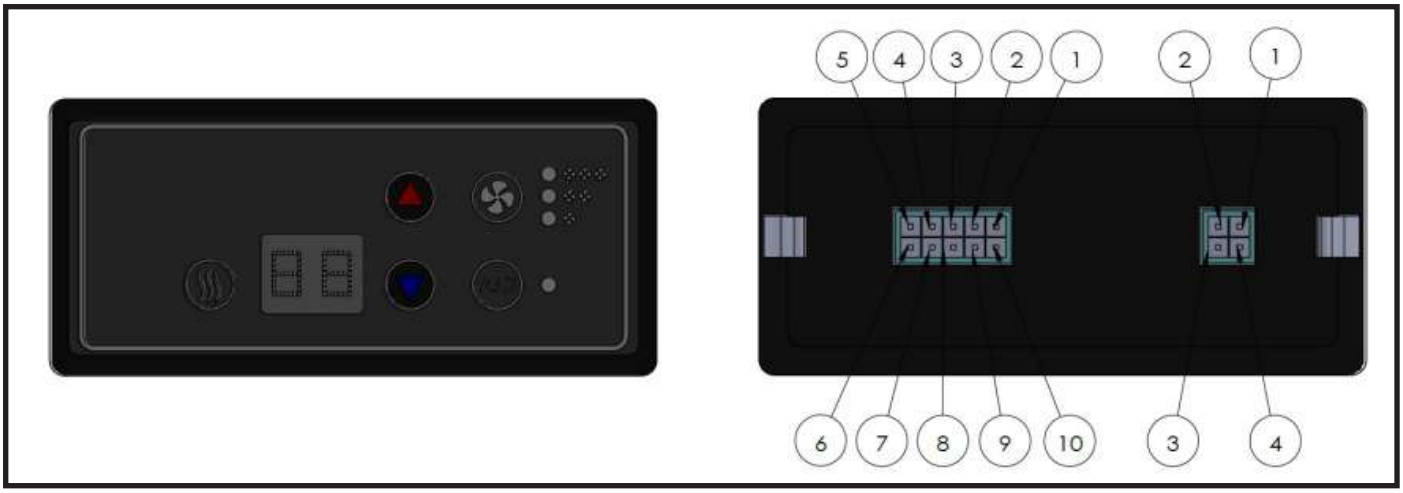

X1		
PIN NO	**Description**	**Note**
1	KL30 12V	Battery Cable Terminal
2	Pressure Sensor	Ground Probe
3	Fan 3. Velocity Stage	R3 Trigger Signal
4	Pressure Sensor	Ground Probe
5	Compressor	R5 Role Trigger Signal
6	Temperature Sensor 1 External	Temperature Sensor
7	Temperature Sensor 1 Internal	Temperature Sensor
8		
9	Fan 2. Velocity Stage	R2 Role Trigger Signal
10	Fan 1. Velocity Stage	R1 Role Trigger Signal

X2		
PIN NO	**Description**	**Note**
1	Fresh Air Close Signal	Valve Close Probe
2	Fresh Air Open Signal	Valve Open Probe
3	KL31 GND-Chassis	Chassis
4	KL15 Ignition – Valve Common Probe	Valve Common Probe

Air Conditioning Compressor Drive Belt

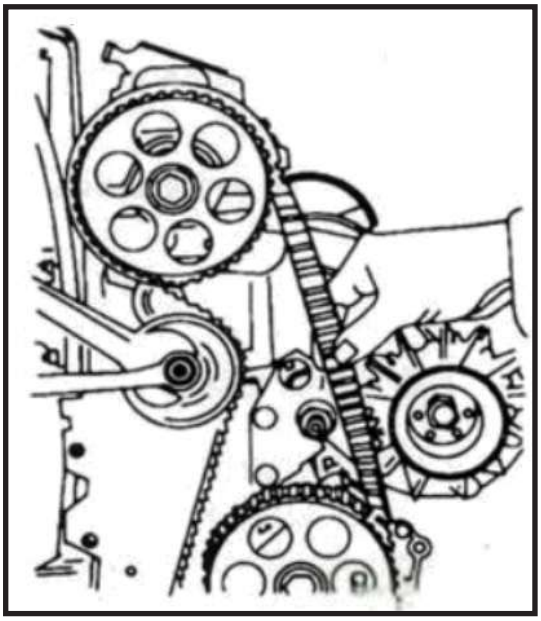

Determination of belt tightness (experimental evaluation) The methods for determining the tightness of the belt are:

Strap tension, press briefly with your hands.

Firstly, check the tension of the belt. Meanwhile, use your thumb to press the strap firmly between the two pulleys. The pressing force is about 10 kg / 22 Ib. If the pressing amount of the tape is about 0,6 in (15 mm), then the tape tension is considered to be exactly right.

If the amount of depression is too large, the tension of the belt is considered to be insufficient. If the belt shows almost no compression, the belt is considered to be too tight.

When tension is insufficient, the belt tends to slip.

When the voltage is too high, it is easy to damage the bearings of various auxiliary machines.

Therefore, the relevant adjusting nuts or bolts must be loosened to adjust the belt tension to the optimum state.

If it is a new belt and its depression is about 0,4-0,5 in (10-12 mm), the belt tension is considered to be exactly.

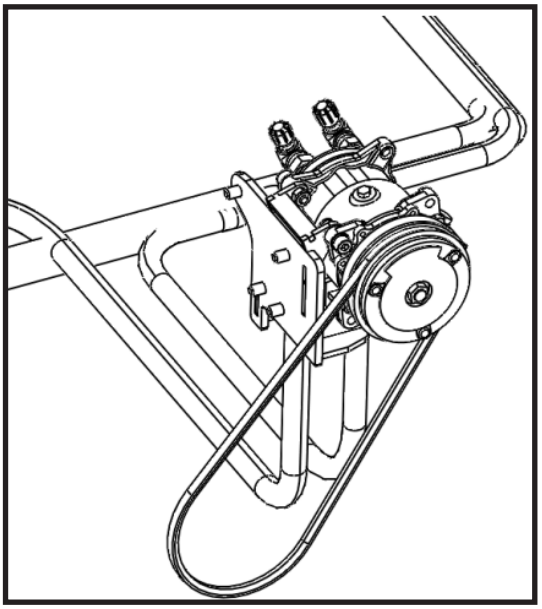

Drive Belt Tension: 270 lbF (1200 N)

Services Port

Service Ports Service ports A, equipped with quick-connect type valves, are incorporated into the refrigerant lines at the compressor. These enable the connec type valves, are incorporated into the refrigerant lines at the compressor.

These enable the connection of a manifold measuring block or a suitable charging station to the system for charging, discharge, maintenance and diagnostic purposes.

Procedures for filling and emptying the system are not provided in this manual because they require special equip ment and training.

Valves include check valves to prevent loss of refrigerant when connecting to the system.

There are protective covers for the ports when not in use. Caps must be in place to reduce leakage and prevent damage to the valve cores.

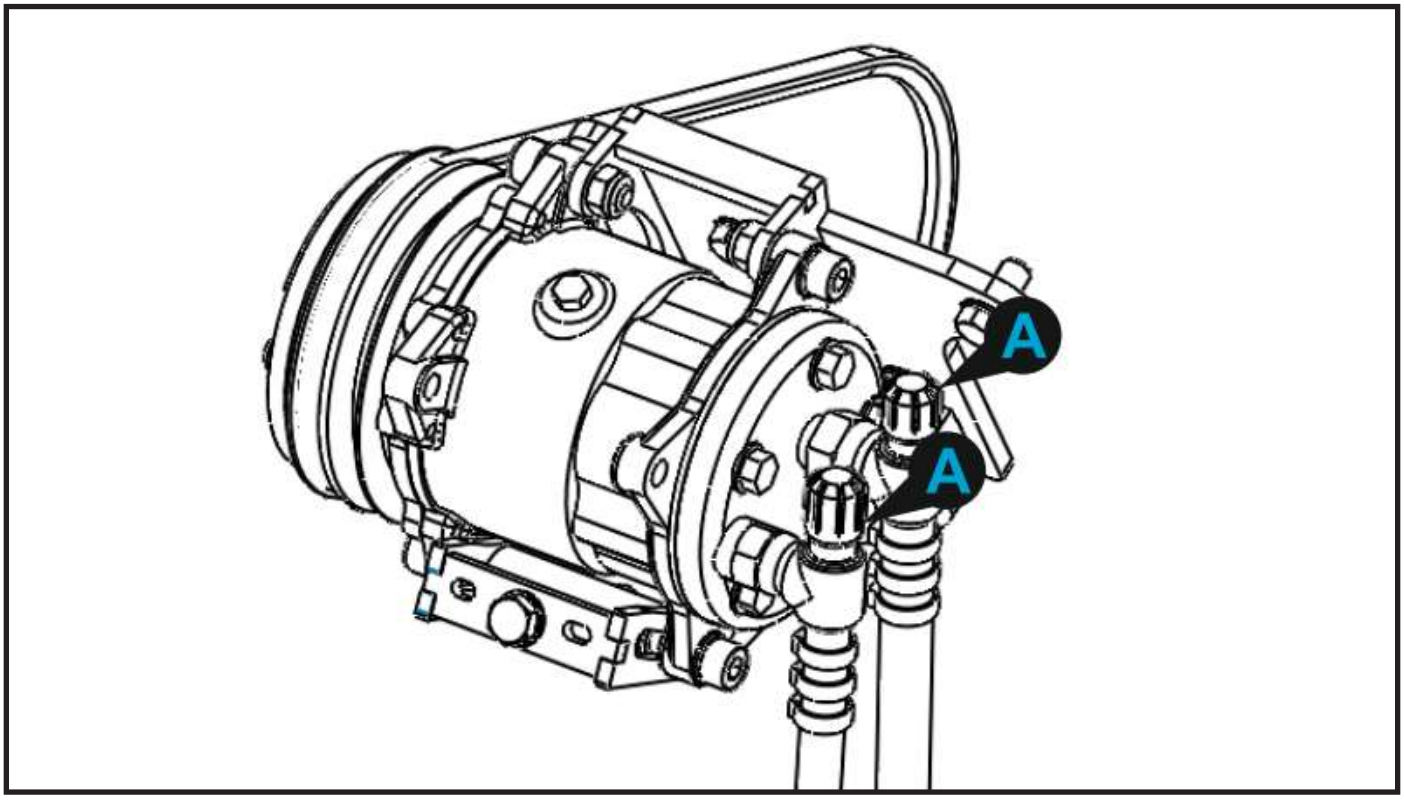

Static Pressure			Flow Rate			Current	Input Power	Output Power	Efficien-cy
inH_2O	Pa	$mm\ H_2O$	cfm	m^3/h	l/s	A	W	W	%
2,76	687,7	70,1	0,0	0,0	0,0	6,7	86,5	0,0	0,0
2,08	518,3	52,8	123,8	210,3	58,4	8,7	112,6	30,2	26,8
1,46	363,8	37,1	261,1	443,6	123,2	13,3	173,3	44,7	25,8
1,00	249,2	25,4	325,4	552,8	153,6	14,3	185,6	38,1	20,5
0,50	124,6	12,7	371,7	631,4	175,4	16,0	207,4	21,8	10,5
0,00	0,0	0,0	427,2	725,8	201,6	17,7	229,5	0,0	0,0

Measurement and calculations are made in compliance with ANSI-AMCA 210-85

Test values are corrected to standart conditions of 760 mmHg / 68 °F (20 °C) / %50 RH

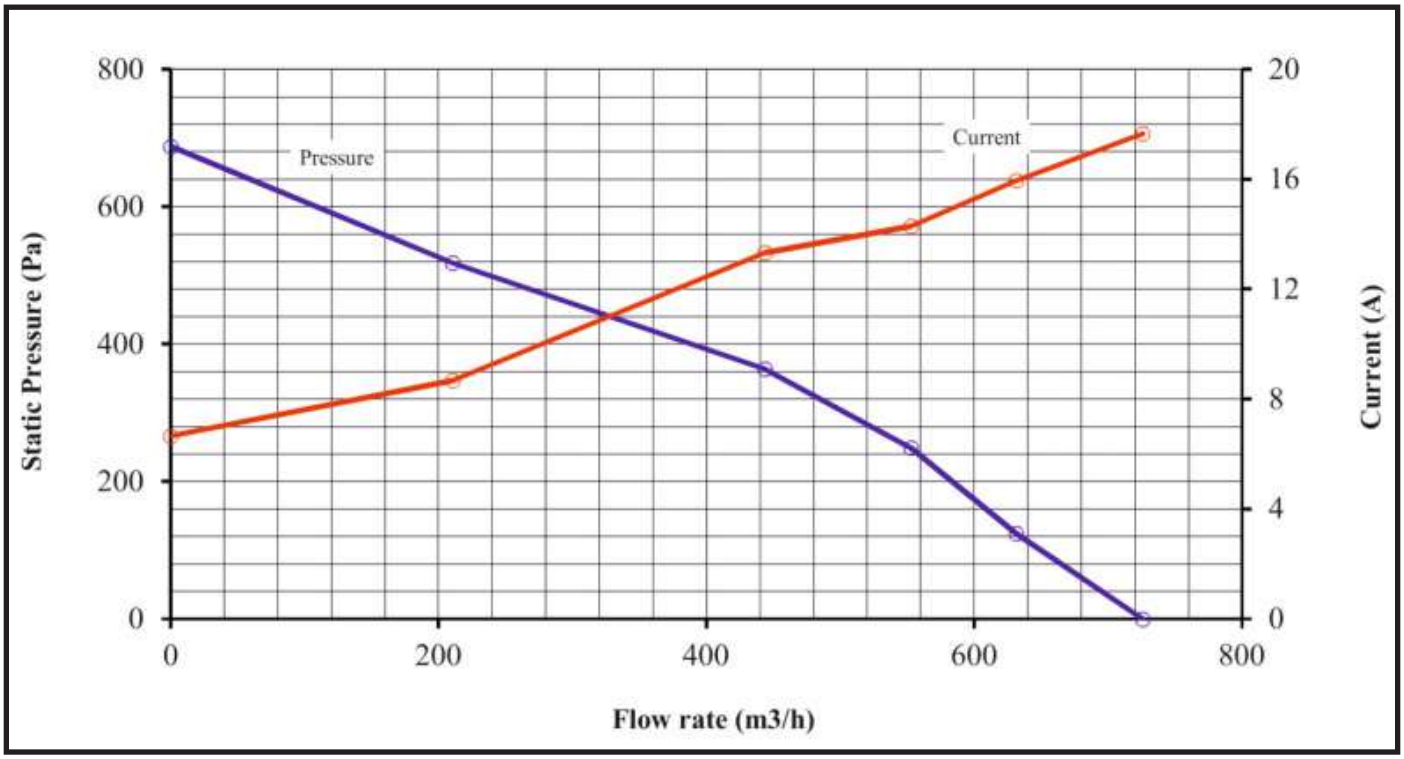

Electrical Wiring Socket Connections

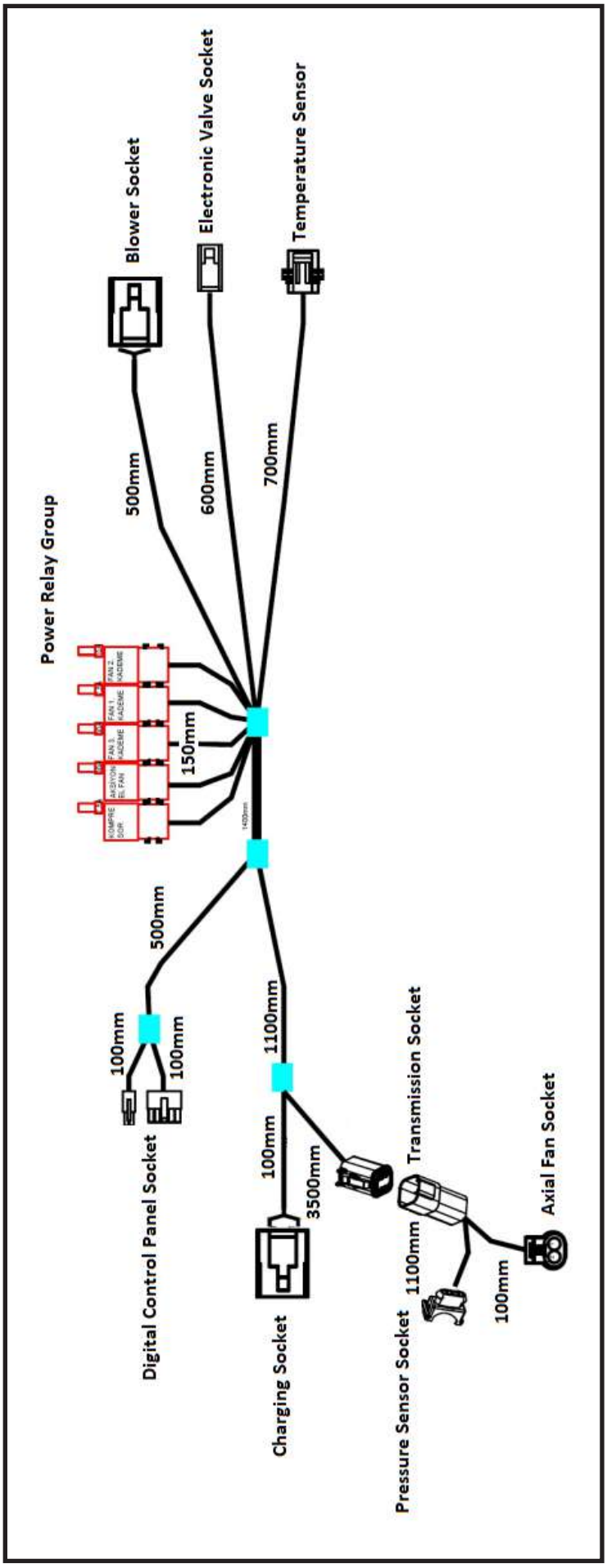

Product Description

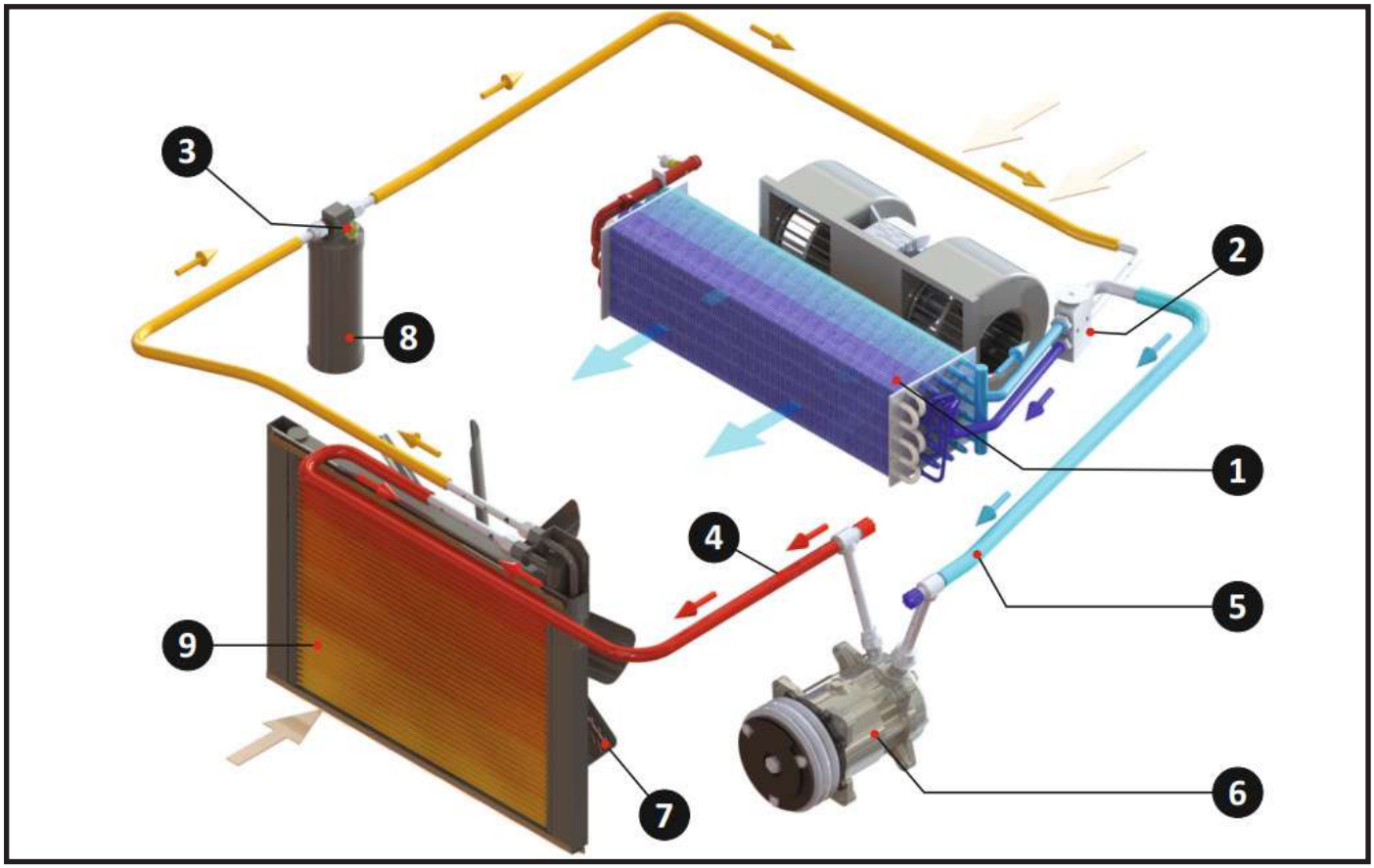

1- Evaporator	4- High-Pressure Line	7- Axial Fan
2- Expansion Valve	5- Low-Pressure Line	8- Drier
3- Pressure Switch	6- Compressor	9- Condenser

Technical Data

Operating Voltage	12 Volt DC

Current	40A
Refrigerant	R134a
Amount of Refrigerant	850 (±25) gr
Refrigerant Oil	50 gr
Oil Type	Poly Alkylene Glycol (PAG100)

R134A is refrigerant is ozone friendly. Using lube oils with R134A can be harmful with compressor. So don't use lube oil with R134A.It should not be used in installations operated with mineral oils R134A, which are used from air conditioners operated with R12 refrigerant. Always With R134A, the synthetic oil (ester oil) should be used.

8. HYDRAULICS

8.1.Hydraulic Component Terminology

To understand the safety, operation and service information presented in this section, it is necessary that the operator/ mechanic be familiar with the name and location of the hydraulic components of the machine. The following illustration identifies the components that are referred to throughout this section.

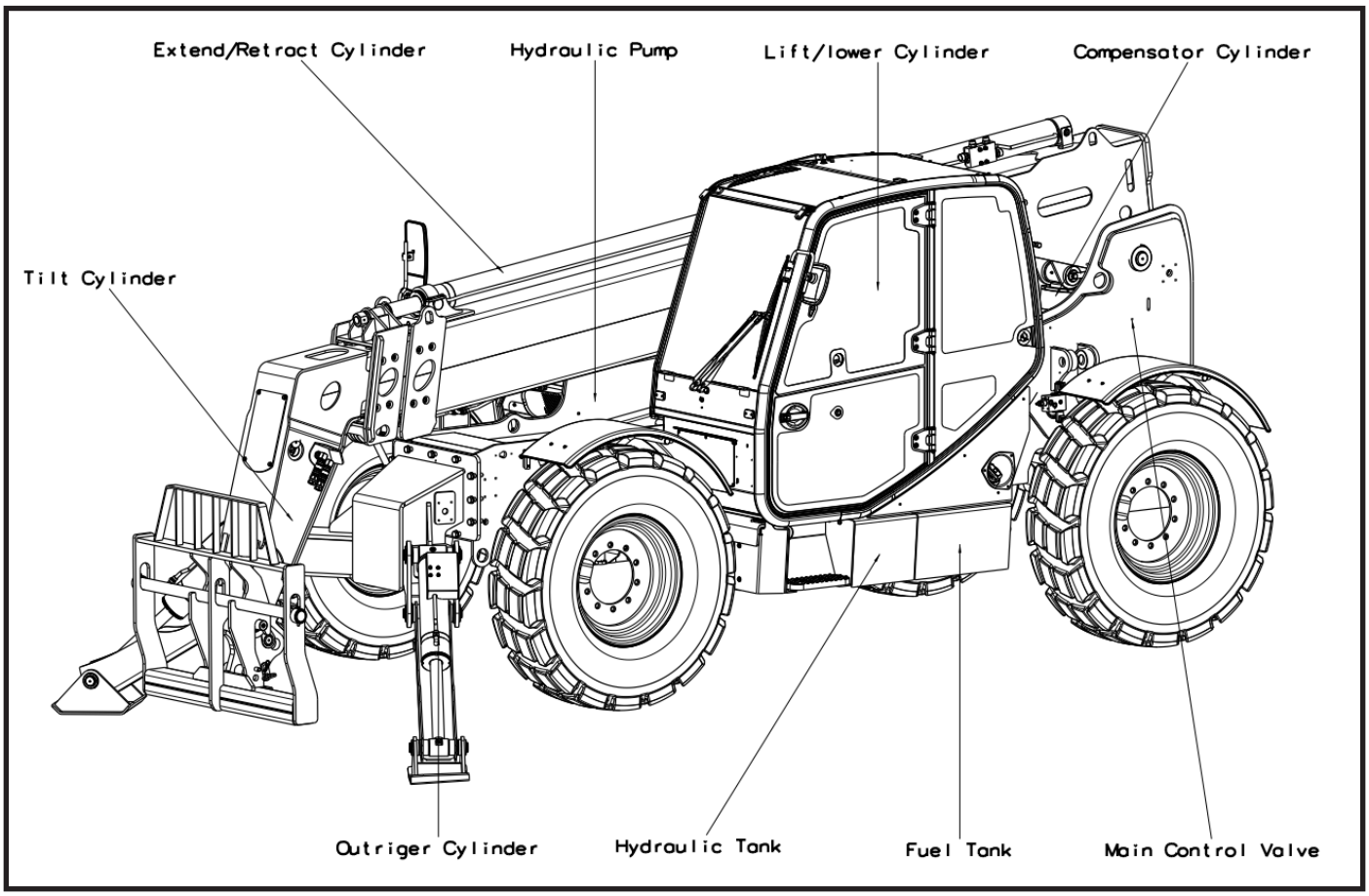

8.2.Pressure Specification

MAIN CONTROL VALVE

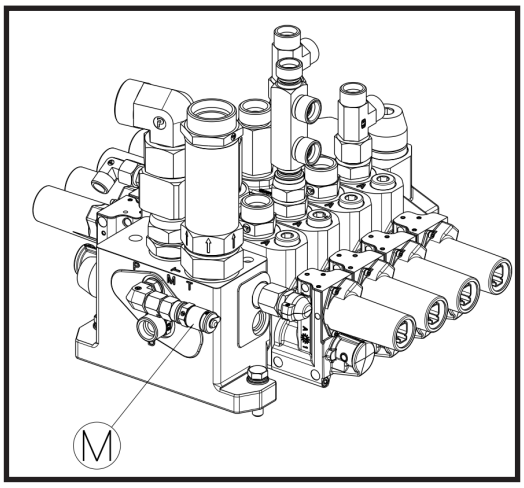

BRAKE VALVE

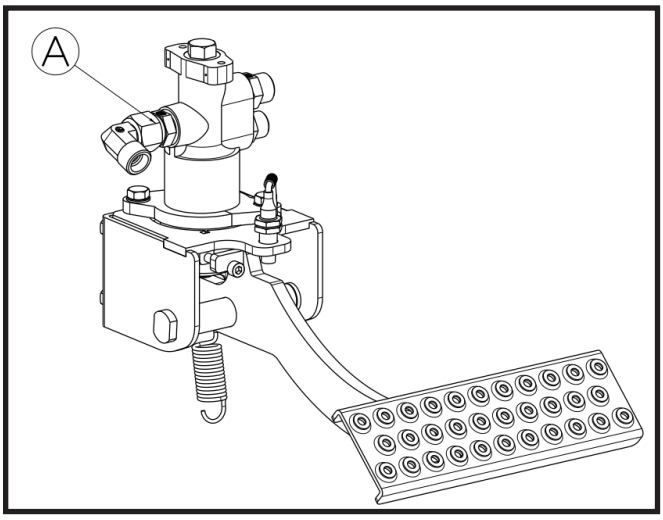

PILOT BRAKE OIL SUPPLY VALVE

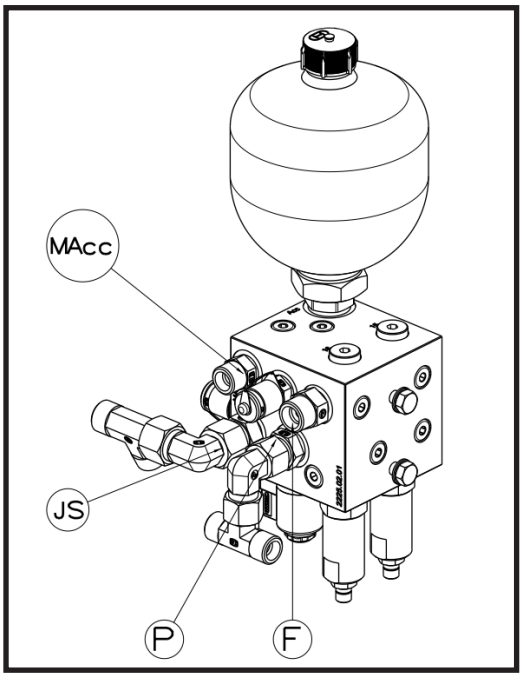

STAB & SWAY VALVE

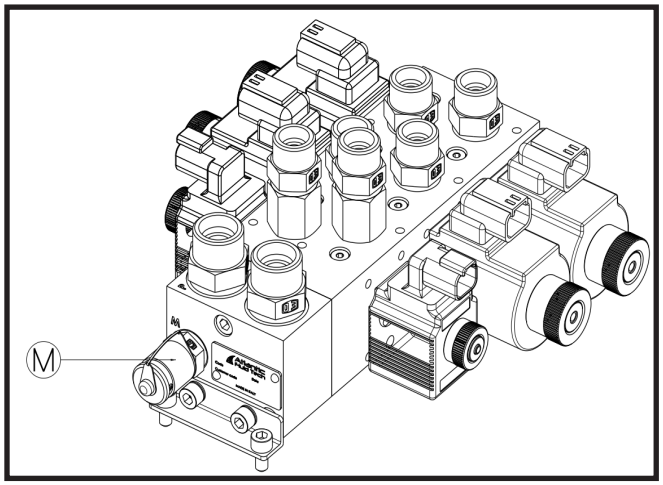

VALVE	PORT	PRESSURE VALUE (psi/bar)
Main Control Valve	M	3626 psi (250 bar)
Brake Valve	A	580 psi (40 bar)
Pilot Brake Oil Supply Valve	MAcc	508 psi (35 bar)
	JS	508 psi (35 bar)
	P	3626 psi (250 bar)
	F	725 psi (50 bar)
Steering Valve	P	2900 psi (200 bar)
Sway Valve	M	3626 psi (250 bar)

9.TROUBLESHOOTING

9.1.Engine Error Codes

SPN	FMI	Description	Recommended Action
523925	3	Short circuit to battery of actuator relay 3.	Check wiring harness and connected loads on pins A88, K57.
523927	3	Short circuit to battery of actuator relay 6.	Check wiring harness and connected loads on pins A04, A05.
523924	4	Short circuit to ground of actuator relay 2.	Threshold for error detection is an internal ECU threshold. Check wiring harness and connected loads on pins A04, A05. If error is still present, exchange ECU.
523925	4	Short circuit to ground of actuator relay 3.	Threshold for error detection is an internal ECU threshold. Check wiring harness and connected loads on PINs A88, K57. If error is still present, exchange ECU.
523926	4	Short circuit to ground of actuator relay 4.	Threshold for error detection is an internal ECU threshold. Check wiring harness and connected loads on pin A90. If error is still present, exchange ECU.
168	3	Sensor battery voltage error; signal range check is high.	Check wiring harness and connected alternator.
168	4	Sensor battery voltage error; signal range check is low.	Check wiring harness and connected alternator.
168	2	High battery voltage; warning threshold is exceeded.	Check wiring harness and connected alternator.
523912	4	For engines <4l: Throttle valve error, Open load or short cut to battery, blocked valve or wrong control signal for valve. For engines with Burner T4i: Pressure Sensor error after valve (DV2), lower limit reached.	The sensed raw voltage value DPM_uRawBrnDVDsP is above the minimum threshold DPM_SRCBrnDVDsP. uMin_C. For CRT < 4l: Check throttle valve. For engines with Burner T4i: Check back-pressure valve.
639	14	CAN-Bus 0: “BusOff-Status”	Threshold for error detection is an internal ECU threshold. BusOff-bit for CAN A mode is set. Check wiring of CAN bus and if necessary, repair it. Check cable connection and if necessary, repair or replace it. Check resistance in CAN lines (120 Ohm).
1231	14	CAN-Bus 1: “BusOff-Status”	Threshold for error detection is an internal ECU threshold. BusOff bit for CAN B mode is set. Check wiring of CAN bus and if necessary, repair it. Check connection cable and if necessary, repair or replace it. Check resistance in CAN lines (120 Ohm).
1235	14	CAN-Bus 2 = engine bus “BusOff-Status”	Threshold for error detection is an internal ECU threshold. BusOff bit for CAN C mode is set. Check wiring of CAN bus and if necessary repair it, check connection cable and if necessary repair or replace it, check resistance in CAN lines (120 Ohm).
102	2	Charged air pressure above warning threshold.	Check waste gate system if necessary replace TC. Check CAC, if all channels are clean, check charge air piping. If an error occurs, always check the delta P sensor and the Venturi tube for damage or contamination, because problems at this point can lead to this result error.
110	1	Physical range check low for coolant temperature.	Check wiring harness and connected coolant temperature sensors.

110	3	Sensor error coolant temperature; Signal range check high.	Check sensor and if necessary replace it, check connection cable and if necessary repair or replace it.
110	4	Sensor error coolant temperature; Signal range check low.	Check sensor and if necessary replace it, check connection cable and if necessary repair or replace it. Measure voltage at coolant temperature Ssensor and replace harness if needed.
110	0	High coolant temperature; Warning threshold exceeded.	Clean radiator, check fan drive, check coolant level, check cooling system in general, check thermostat function and check water pump.
110	0	Coolant temperature; System reaction initiated.	Clean radiator, check fan drive, check coolant level, check cooling system in general, check thermostat function and check water pump.
111	1	Coolant level too low.	Check coolant level, inspect cooling system for leakage and if necessary repair it, check sensor and wiring.
1109	2	Engine shut off demand ignored.	Depending on error requested a shut off.
523698	11	Shut off request from supervisory monitoring function.	Threshold for error detection is an internal ECU threshold. Check error memory for additional errorcode to find root cause. Depending on additional error follow the documented “Take action for repair”.
3224	2	DLC error of CAN-receive-frame AT1IG1Vol NOX sensor.	Threshold for error detection is an internal ECU threshold. Check Nox-Sensor and the wiring from CAN-BUS.
3224	9	Timeout error of CAN-receive-frame AT1IG1Vol; NOX sensor.	Check NOX sensor and sensor connection.
523939	9	Broadcast announce message of the calibration message of the upstream catalytic NOx sensor has failed.	Check NOX sensor and sensor connection.
3234	2	DLC error of CAN-Receive-Frame AT1O-1Vol.	Check NOX downstream sensor and sensor connection.
3234	9	Timeout error of CAN-Receive-Frame AT1OG1Vol.	Check NOX downstream sensor and sensor connection.
523942	9	Calibration message 1 of the after catalyst Nox sensor has failed.	Check NOX downstream sensor and sensor connection.
523211	9	Timeout error of CAN-Receive-Frame EBC1.	Not used.
523704	12	Timeout error of CAN-Transmit-Frame EEC3.	Check wiring harness and customer nodes.
523935	12	Timeout error of CAN-Transmit-Frame EEC3VOL1. Engine send messages.	Check wiring harness and customer nodes.
523936	12	Timeout error of CAN-Transmit-Frame EEC3VOL2. Engine send messages	Check wiring harness and customer nodes.
523212	9	Timeout error of CAN-Receive-Frame ComEngPrt. Engine Protection.	Check CAN-Bus cabling (Bus sheduling, polarity, short circuit, power interrupt). Test protocol of receiver and check CAN functional range.
523741	14	Engine shut off request through CAN.	Not used.
523240	9	Timeout CAN-message FunModCtl. Function Mode Control.	Check CAN-Bus cabling (Bus sheduling, polarity, short circuit, power interrupt). Test protocol of receiver and check CAN functional range.

523216	9	Timeout error of CAN-Receive-Frame PrHtEnCmd. Pre-heat command, engine command.	Check wiring harness and customer devices.
523766	9	Timeout error of CAN-Receive-Frame Active TSC1AE.	Not used.
523767	9	Timeout error of CAN-Receive-Frame Passive TSC1AE.	Not used.
523768	9	Timeout error of CAN-Receive-Frame Active TSC1AR.	Not used.
523769	0	Timeout error of CAN-Receive-Frame Passive TSC1AR.	Not used.
523776	9	Timeout error of CAN-Receive-Frame TSC1TE - active.	Threshold for error detection is an internal ECU threshold. Check CAN Bus cabling (Bus sheduling, polarity, short circuit, power interrupt). Test protocol of receiver and check CAN functional range.
523777	9	Passive timeout error of CAN-Receive-Frame TSC1TE. Setpoint.	Check CAN-Bus cabling (Bus scheduling, polarity, short circuit, power interrupt). Test protocol of receiver, check CAN functional range and check actuator.
523778	9	Timeout error of CAN-Receive-Frame TSC-1TR.	Check CAN Bus cabling (Bus scheduling, polarity, short circuit, power interrupt). Test protocol of receiver, check CAN functional range and check actuator.
523779	9	Passive timeout error of CAN-Receive-Frame TSC1TR.	Check CAN Bus cabling (Bus scheduling, polarity, short circuit, power interrupt). Test protocol of receiver, check CAN functional range and check actuator.
523605	9	Timeout error of CAN-Receive-Frame TSC1AE. Traction Control.	Not used.
523606	9	Timeout error of CAN-Receive-Frame TSC1AR. Retarder.	Not used.
898	9	Timeout error of CAN-Receive-Frame TSC1TE. Setpoint.	Check CAN-Bus cabling (Bus sheduling, polarity, short circuit, power interrupt). Test protocol of receiver and check CAN functional range.
520	9	Timeout Error of CAN-Receive-Frame TSC-1TR; control signal	Check CAN Bus cabling (Bus sheduling, polarity, short circuit, power interrupt), test protocol of receiver, check CAN functional range.
523982	0	Powerstage diagnosis disabled. High battery voltage.	Check wiring, check alternator, check cables and repair or replace if necessary.
523982	1	Powerstage diagnosis disabled. Low battery voltage.	Check wiring, check alternator, check cables and repair or replace if necessary.
630	12	Access error EEPROM memory (delete).	Threshold for error detection is an internal ECU threshold. There is no healing possible for the error. In every new initialization phase, the debounce level is set to zero. If not programmed, EEPROM is defect --> ECU is defect, reprogramm ECU and if necessary replace it.
630	12	Access error EEPROM memory (read).	Threshold for error detection is an internal ECU threshold. There is no healing possible for the error. In every new initialization phase, the debounce level is set to zero. If not programmed, EEPROM is defect -->ECU is defect, reprogramm ECU and if necessary replace it.
630	12	Block could not be written for minimum three times.	Threshold for error detection is an internal ECU threshold. If not programmed, EEPROM is defect --> ECU is defect, reprogramm ECU and if necessary replace it.

411	4	Physical range check low for EGR differential pressure.	Check wiring harness and connected EGR. If an error occurs, always check the delta P sensor and the Venturi tube for damage or contamination, because problems at this point can lead to this result error.
523612	12	Internal software error ECU. Injection cut off.	Threshold for error detection is an internal ECU threshold. Caution! Sequence error, check error memory for other errors.
190	0	Engine speed above warning threshold. Overspeed detection in component engine protection.	Check powertrain settings regarding overspeed.
190	0	Engine speed above warning threshold. Overspeed detection in component engine protection.	Check powertrain settings regarding overspeed.
190	0	Engine speed above warning threshold (FOC-Level 1).	Check powertrain settings regarding overspeed.
190	11	Engine speed above warning threshold (FOC-Level 2).	Check powertrain settings regarding overspeed.
190	14	Engine speed above warning threshold (Overrun Mode).	Check powertrain settings regarding overspeed.
171	3	Sensor error SCR-System environment temperature. DPF-System air inlet temperature, signal range check high.	If environment temperature sensor is not working, check sensor and if necessary replace it, check connection cable and if necessary repair or replace it.
171	4	Sensor error SCR-System environment temperature. DPF-System air inlet temperature, signal range check low.	Check cabling, if environment temperature sensor is not working, check sensor and if necessary replace it, check connection cable and if necessary repair or replace it.
190	8	Sensor camshaft speed, disturbed signal.	Threshold for error detection is an internal ECU threshold, occurs by disturbed camshaft signal. Check increment wheel position, clean and adjust if necessary, check sensor postition. Check camshaft sensor or wiring.
190	12	Sensor camshaft detection. Out of range, signal disrupted, no signal.	Threshold for error detection is an internal ECU threshold, occurs by disturbed or no camshaft signal. Check increment wheel position, clean and adjust if necessary, check sensor postition. Check Camshaft Sensor or wiring.
190	2	Offset angle between crank- and camshaft-sensor is too large.	Threshold for error detection is an internal ECU threshold, occurs by offset between crankshaft and camshaft. Check increment wheel position, clean and adjust if necessary, check sensor postition. Check Camshaft and Crankshaft senor or wiring.
190	8	Sensor crankshaft detection. Out of range, signal disrupted or no signal.	Threshold for error detection is an internal ECU threshold, occurs by disturbed crankshaft signal. Check increment wheel position, clean and adjust if necessary and check sensor position. Check crankshaft sensor or wiring.
190	12	Speed detection, out of range, signal disrupted or no signal.	Threshold for error detection is an internal ECU threshold, occurs by disturbed or no crankshaft signal. Check increment wheel position, clean and adjust if necessary and check Crankshaft sensor postition or wiring.
97	3	Sensor error water in fuel, signal range check high.	Check wiring and water in fuel sensor. Check cabling, if water in Fuel sensor is not working, check sensor and if necessary replace it. Check connection cable and if necessary repair or replace it.
97	4	Sensor error water in fuel, signal range check low.	Check wiring, sensor and ECU.

94	3	Sensor error low fuel pressure, signal range check high.	Check cabling. Check connection cable and if necessary repair or replace it. If sensor is not working, check sensor and if necessary replace it.
94	4	Sensor error low fuel pressure, signal range check low.	Check cabling. If sensor is not working, check sensor and if necessary replace it. Check connection cable and if necessary repair or replace it.
94	1	Low fuel pressure, warning threshold exceeded.	Check low fuel pressure system: Fuel feed pump, relay , fuse, wiring, sensor. If necessary repair or replace it.
94	1	Low fuel pressure, shut off threshold exceeded.	Not used.
676	11	Cold start aid relay error.	Threshold for error detection is an internal ECU threshold. Check wire harness, relay and ECU. If necessary, replace relay.
676	11	Cold start aid relay: Open load.	Threshold for error detection is an internal threshold. Check wire harness, replace relay, fuse and ECU.
729	5	Cold start aid relay open load.	Threshold for error detection is an internal ECU threshold. Check wire, relay and ECU.
729	3	Intake Air Heater Device: Short circuit to battery.	Threshold for error detection is an internal ECU threshold. Cool down and check wiring to the intake air heater device.
729	4	Air intake heater: Short circuit to ground.	Threshold for error detection is an internal ECU threshold. Check wiring to the air intake heater.
523895	13	Check of missing injector adjustment value programming (IMA) injector 1.	Check correct injector adjustment value (IMA). Use SERDIA UseCase to check it. Threshold for error detection is an internal ECU threshold.
523896	13	Check of missing injector adjustment value programming (IMA) injector 2.	Check correct injector adjustment value (IMA). Use SERDIA UseCase to check it. Threshold for error detection is an internal ECU threshold.
523897	13	Check of missing injector adjustment value programming (IMA) injector 3.	Check correct injector adjustment value (IMA). Use SERDIA UseCase to check it. Threshold for error detection is an internal ECU threshold.
523898	13	Check of missing injector adjustment value programming (IMA) injector 4.	Check correct injector adjustment value (IMA). Use SERDIA UseCase to check it. Threshold for error detection is an internal ECU threshold.
523899	13	Check of missing injector adjustment value programming (IMA) injector 5.	Check correct injector adjustment value (IMA). Use SERDIA UseCase to check it. Threshold for error detection is an internal ECU threshold.
523900	13	Check of missing injector adjustment value programming (IMA) injector 6.	Check correct injector adjustment value (IMA). Use SERDIA UseCase to check it. Threshold for error detection is an internal ECU threshold.
523350	4	Injector cylinder-bank 1: Short circuit.	Check wiring harness, injectors and if necessary repair or replace it. Threshold for error detection is an internal ECU threshold.
523352	4	Injector cylinder-bank 2: Short circuit.	Check wiring harness, injectors and if necessary repair or replace it. Threshold for error detection is an internal ECU threshold.
523354	12	Injector powerstage output defect.	If error is not removable, change ECU. Threshold for error detection is an internal ECU threshold.

651	5	Injector 1 (in firing order): Interruption of electric connection.	Check wiring harness, injectors and if necessary repair or replace it. Threshold for error detection is an internal ECU threshold.
652	5	Injector 2 (in firing order): Interruption of electric connection.	Check wiring harness, injectors and if necessary repair or replace it. Threshold for error detection is an internal ECU threshold.
653	5	Injector 3 (in firing order): Interruption of electric connection.	Check wiring harness, injectors and if necessary repair or replace it. Threshold for error detection is an internal ECU threshold.
654	5	Injector 4 (in firing order): Interruption of electric connection.	Check wiring harness, injectors and if necessary repair or replace it. Threshold for error detection is an internal ECU threshold.
655	5	Injector 5 (in firing order): Interruption of electric connection.	Check wiring harness, injectors and if necessary repair or replace it. Threshold for error detection is an internal ECU threshold.
656	5	Injector 6 (in firing order): Interruption of electric connection.	Check wiring harness, injectors and if necessary repair or replace it. Threshold for error detection is an internal ECU threshold.
651	3	Injector 1 (in firing order): Short circuit.	Check wiring harness, injectors and if necessary repair/replace it. Use SerDia Injector test for diagnosis. Threshold for error detection is an internal ECU threshold.
652	3	Injector 2 (in firing order): Short circuit.	Check wiring harness, injectors and if necessary repair/replace it. Use SerDia Injector test for diagnosis. Threshold for error detection is an internal ECU threshold.
653	3	Injector cylinder 3: Wiring harness, cable break or short circuit.	Check wiring harness, injectors and if necessary repair/replace it. Use SerDia Injector test for diagnosis. Threshold for error detection is an internal ECU threshold.
654	3	Injector 4 (in firing order): Short circuit.	Check wiring harness, injectors and if necessary repair/replace it. Use SerDia Injector test for diagnosis. Threshold for error detection is an internal ECU threshold.
655	3	Injector 5 (in firing order): Short circuit.	Check wiring harness, injectors and if necessary repair/replace it. Use SerDia Injector test for diagnosis. Threshold for error detection is an internal ECU threshold.
656	3	Injector 6 (in firing order): Short circuit.	Check wiring harness, injectors and if necessary repair/replace it. Use SerDia Injector test for diagnosis. Threshold for error detection is an internal ECU threshold.
523615	5	Metering unit (Fuel-System): Open load.	Check wiring harness and metering unit, if necessary repair or replace it. Threshold for error detection is an internal ECU threshold.
523615	3	Metering unit (Fuel-System): Short circuit to battery, highside.	Check wiring harness, metering unit and ECU, if necessary repair or replace it. Threshold for error detection is an internal ECU threshold.
523615	4	Metering unit (Fuel-System): Short circuit to ground, high side.	Check wiring harness and metering unit, if necessary repair or replace it. Threshold for error detection is an internal ECU threshold.
523615	3	Metering unit (Fuel-System): Short circuit to battery, low side.	Check wiring harness and metering unit, if necessary repair or replace it. Threshold for error detection is an internal ECU threshold.
523615	4	Metering Unit (Fuel-System): Short circuit to ground, low side.	Check wiring harness and metering unit, if necessary repair or replace it. Threshold for error detection is an internal ECU threshold.
523615	4	Metering unit, short circuit to ground	Not used
523612	12	Internal ECU monitoring detection reported error	Threshold for error detection is an internal ECU threshold. If error is still present, exchange ECU.

523612	12	ECU reported internal software error Internal ECU monitoring detection reported error	Threshold for error detection is an internal ECU threshold. Check wiring, check connected sensors actuators. If error is still present, exchange ECU.
523612	12	ECU reported internal software error	Threshold for error detection is an internal ECU threshold. Check wiring, check connected sensors actuators. If error is still present, exchange ECU.
523612	12	ECU reported internal software error.	Threshold for error detection is an internal ECU threshold. If error is still present, exchange ECU.
523612	12	ECU reported internal software error.	Threshold for error detection is an internal ECU threshold. If error is still present, exchange ECU.
523612	12	ECU reported internal software error.	Threshold for error detection is an internal ECU threshold. If error is still present, exchange ECU.
523612	12	ECU reported internal software error	Threshold for error detection is an internal ECU threshold. If error is still present, exchange ECU.
523612	12	Injection system, electrical error injectors	Threshold for error detection is an internal ECU threshold. If error is still present, exchange ECU.
523612	12	ECU reported internal software error	Threshold for error detection is an internal ECU threshold. If error is still present, exchange ECU.
523612	12	ECU reported internal software error	Threshold for error detection is an internal ECU threshold. If error is still present, exchange ECU.
523612	12	ECU reported internal software error	Threshold for error detection is an internal ECU threshold. If error is still present, exchange ECU.
523612	3	Reported Over Voltage of Supply	Threshold for error detection is an internal ECU threshold.
523612	4	Reported UnderVoltage of Supply	Threshold for error detection is an internal ECU threshold.
100	3	Sensor error oil pressure; signal range check high	Check battery and wiring Check cabling. If sensor not working, check sensor and if necessary replace it, check connection cable and if necessary repair or replace it.
100	4	Sensor error oil pressure sensor; signal range check low	The sensed raw voltage value Oil_uRawPSwmp is above Oil_SRCPSwmp.uMin_C Check cabling, if sensor not working, check sensor and if necessary replace it, check connection cable and if necessary repair or replace it
100	1	Low oil pressure; warning threshold exceeded	Check oil level, check engine for oil leckage, measure oil pressure external to evaluate sensor value. Warning threshold depending on engine speed.
107	3	Sensor error airfilter differential pressure; short circuit to battery	If the signal PAirFltD_uRaw is below the applicatable threshold PAirFltD_uSRCMax_C, a signal range violation is reset after the healing debouncing. No detail informationen!
107	0	Sensor error airfilter differential pressure; short circuit to ground	If the signal PAirFltD_uRaw is above the applicatable threshold PAirFltD_uSRCMin_C, a signal range violation is reset after the healing debouncing. No detail informationen!
102	2	Pressure downstream charge air cooler, plausibility error	1) Exchange boost pressure sensor 2) Exchange ECU

102	1	Pressure downstream charge air cooler, pressure below lower physical threshold	Check complete air system of engine for massive leakage, especially from compressor to intake air manifold. Check air filter. Exchange charge air presure sensor.
102	3	Pressure downstream charge air cooler, short circuit to battery or open load	Check cabling, if charge air pressure/temperature sensor is not working, check sensor and if necessary replace it, check connection cable and if necessary repair or replace it.
102	4	Pressure downstream charge air cooler, short circuit to ground	Check cabling, if charge air pressure/temperature sensor is not working, check sensor and if necessary replace it, check connection cable and if necessary repair or replace it
411	3	Sensor error differential pressure Venturiunit (EGR), signal range check low.	Check cabling, if charge EGR Delta pressure sensor is not working, check sensor and if necessary replace it, check connection cable and if necessary repair or replace it.
411	4	Sensor error differential pressure Venturiunit (EGR), signal range check high.	Check cabling. If charge EGR Delta pressure sensor is not working, check sensor and if necessary replace it, check connection cable and if necessary repair or replace it.
3253	2	Differential pressure DPF, plausibility error	Check tubes from exhaust line to sensor => course strictly rising. Could sensor be frozen? Cold enough? => Warm-up engine and check whether failure heals (needs ignition cycle) Water in sensor or lines to sensor? => dry & Re-Check system. Exchange differental pressure sensor Trigger Conditions: If the differential pressure sensor over the DOC + DPF system detects a pressure difference higher than 18hPa AND ignition is off for more than 2s AND engine is not in cranking this diagnostic will detect an error.
3251	0	Differential pressure DPF maximum value is exceeded	Check soot load level DPF Check DPF condition Check DPF differential sensor If still allowed run stand-still If failure healed after stand-still check engine regarding too high soot emissions at engine out: Check complete air path of engine => Turbocharger, throttle, EGR-Valve, EGR-Cooler, all pipes If stand-still is not allowed to run check engine regarding too high soot emissions at engine out Replace DPF If an error occurs, always check the delta P sensor and the Venturi tube for damage or contamination because problems at this point can lead to this result error!
3251	1	Differential pressure DPF, pressure below lower shutoff threshold.	Check tubes from exhaust line to DPF differential sensor Check flange between DOC & DPF for leakage Check Exhaust pipe upstream DPF for leakage Check engine exhaust mass flow / exhaust volume flow Visual inspection of dismounted DPF exchange DPF differential sensor exchange DPF

3253	3	Electrical error differential pressure B58 (DPF). (signal range check high)	Check wiring (terminal diagram engine side). Exchange differential sensor DPF.
3253	4	Electrical error differential pressure (DPF). signal range check low.	Check wiring Exchange differential sensor DPF
523009	9	The pressure relief valve (PRV) has reached the number of allowed activations.	Replace pressure relief valve (PRV) and reset fault with Serdia.
523470	2	Pressure relief valve is forced to open, perform pressure increase.	Threshold for error detection is an internal ECU threshold. Reset the fault and at reappearance check injection system.
523470	12	Pressure Relief Valve (PRV) forced to open. Shutoff conditions.	Threshold for error detection is an internal ECU threshold. Check PRV opening counter and if necessary replace PRV, check rail-pressure sensor for plausibility and if necessary replace it, check FCU and if necessary replace it.
523470	14	Open Pressure Relief Valve (PRV)	Threshold for error detection is an internal ECU threshold. Only after ECU reset. Check PRV opening counter and if necessary replace it, check rail-pressure sensor for plausibility and if necessary replace it, check FCU and if necessary replace it.
523470	11	Pressure Relief Valve (PRV) error; Rail pressure out of tolerance range	Threshold for error detection is an internal ECU threshold. Check railpressure, check rail pressure sensor for plausibility, check FCU.
523009	10	Open time of Pressure Relief Valve (PRV) for wear out monitoring had exceeded	Replace pressure relief valve (PRV) and reset fault with Serdia.
1176	3	Pressure sensor upstream turbine, signal range check (SRC) high.	Check cabling, check turbine upstream pressure sensor and if necessary replace it, check connection cable and if necessary repair or replace it.
1176	4	Pressure sensor upstream turbine, signal range check (SRC) low.	Check cabling, check turbine upstream pressure sensor and if necessary replace it, check connection cable and if necessary repair or replace it.
523613	0	Rail pressure below setpoint, speed-dependent threshold exceeded.	Threshold for error detection is an internal ECU threshold. (A) Check for leakage (B) Check fuel-primary pressure (C) Change components, check sensor and if necessary replace it, check fuel system and if necessary repair it
523613	1	Rail pressure metering unit, Minimum rail pressure exceeded (RailMeUn3) Negative deviation of rail pressure second stage (RailMeUn22).	Threshold for error detection is an internal ECU threshold. (A) Check backflow pressure (B) Check Injector function with SerDia (C) Change components (metering unit, injector) if necessary.

523613	0	Rail pressure metering unit, Maximum rail pressure exceeded.	(A) Check backflow pressure (B) Check pressure relief valve and metering unit. (C) Change components if necessary
523613	2	Rail pressure metering unit, Setpoint of metering unit in overrun mode not plausible.	Threshold for detection is an internal ECU threshold. (A) Check backflow pressure (B) Check pressure relief valve and metering unit. (C) Change components if necessary
523470	7	Maximum rail pressure exceeded (PRV).	(A) Check railpressure relief valve and replace if necessary. (B) Check high pressure pumps, pressure relief valve and metering unit. (C) Change components if necessary.
157	3	Sensor error rail pressure. Sensor voltage above upper limit.	Check cabling, check rail pressure sensor and if necessary replace it, check connection cable and if necessary repair or replace it.
157	4	Sensor error rail pressure. Sensor voltage below lower limit.	Check cabling, check rail pressure sensor and if necessary replace it, check connection cable and if necessary repair or replace it.
523720	8	DEF supply module heater temperature; duty cycle in failure range.	When the received supply module heater temperature duty cycle SCR_rSMT is out of the failurerange (SCR_rSMFailMax_C <SCR_rSMHtrT <SCR_rSMFailMin_C) Supply module check and replace if necessary. Check the wiring.
523721	11	Urea supply module temperature measurement not available.	Threshold for detection is an internal ECU threshold. No erasing in the current driving cycle. Supply module check and replace if necessary. Check the wiring.
523722	8	DEF supply module PWM signal; period outside valid range.	The Time period of the received PWM signal SCR_tiSMPerPwm is within the specified range of150ms to 250ms Supply module check and replace if necessary. Check the wiring.
523721	8	DEF supply module temperature; duty cycle in failure range.	Supply module check and replace if necessary. Check the wiring.
29	3	Handthrottle idle validation switch; short circuit to battery	If the signal is below the applicatable threshold APP_uRawSRCHiHTLIS_C, the signal range violation is reset after the healing debouncing. In case when the CCP is active (CCP_stActive = 1)and the reading from the EEPROM memory is successful, the signal is below the threshold APP_uHTLISCCPHi [1], a signal range violation is reset after debouncing.
91	3	Sensor error accelerator pedal. Signal range check high.	Check cabling, check accelerator pedal sensor and if necessary replace it, check connection cable and if necessary repair or replace it. If the signal is below the applicatable threshold APP_uRaw1SRCHigh_C, the signal range violation is reset after the healing debouncing.
29	4	Handthrottle; short circuit to ground	If the signal exceeds the applicatable threshold APP_uRawSRCLoHTLIS_C, the signal range violation is reset after the healing debouncing. In case when the CCP is active (CCP_stActive = 1) and the reading from the EEPROM memory is successful, the signal exceeds the threshold APP_uHTLISCCPLo [1], a signal range violation is reset after debouncing.
91	4	Sensor error accelerator pedal. Signal is below the range.	Check cabling, check accelerator pedal sensor and if necessary replace it, check connection cable and if necessary repair or replace it If the signal exceeds the applicatable threshold APP_uRaw1SRCLow_C, the signal range violation is reset after the healing.
1079	13	Failure of sensor supply voltage 1.	Check cabling of external components, check working voltage and if necessary correct it, check connection cable and if necessary repair or replace it, if error is not removable, change ECU.
1080	13	Failure of sensor supply voltage 2.	Check cabling of external components, check working voltage and if necessary correct it, check connection cable and if necessary repair or replace it, if error is not removable, change ECU.

523601	13	Failure of sensor supply voltage 3.	Check cabling of external components, check working voltage and if necessary correct it, check connection cable and if necessary repair or replace it, if error is not removable, change ECU.
677	3	Starter relay high side. Short circuit to battery.	Threshold for error detection is an internal ECU threshold. Check cabling and start relay and if necessary replace it, check connection cable and if necessary repair or replace it.
677	4	Starter relay high side short circuit to ground.	Threshold for error detection is an internal ECU threshold. Check cabling and start relay and if necessary replace it, check connection cable and if necessary repair or replace it.
677	5	Starter relay low side no load error.	Threshold for error detection is an internal ECU threshold. Check cabling and start relay and if necessary replace it, check connection cable and if necessary repair or replace it.
677	3	Starter relay low side short circuit to battery.	Threshold for error detection is an internal ECU threshold. Check cabling and start relay and if necessary replace it, check connection cable and if necessary repair or replace it.
677	4	Starter relay low side short circuit to ground.	Threshold for error detection is an internal ECU threshold. Check cabling and start relay and if necessary replace it, check connection cable of terminal 50 and if necessary repair or replace it.
523612	14	Softwarereset CPU SWReset_0	Threshold for error detection is an internal ECU threshold.
91	11	Plausibility error between APP1 and APP2 or APP1 and idle switch.	Threshold for error detection is an internal ECU threshold. Check cabling, check accelerator pedal and pedal sensor and if necessary replace it, check connection cable and if necessary repair or replace it. When the PWM period APP_tiPWMPer is in between APP_tiSRCLoPWMPer_C and APP_tiSRCHiPWMPer_C.
523550	12	Terminal 50 was operated too long	Threshold for error detection is an internal ECU threshold. Check cabling, if sensor not working, check start switch and if necessary replace it, check connection cable and if necessary repair or replace it.
105	3	Electrical error charged air temperature. Signal range check high. (SRC)	The sensor raw signal Air_uRawTCACDs (voltage)> Air_SRCTCACDs.uMin_C. Check CAC-sensor and if necessary replace it, check connection cable and if necessary repair or replace it.
105	4	Electrical error charged air temperature. Signal range check low.	The sensor raw signal Air_uRawTCACDs (voltage) is below Air_SRCTCACDs.uMin_C. Check CAC-sensor and if necessary replace it, check connection cable and if necessary repair or replace it
105	0	Charged air cooler temperature. System reaction initiated. High charged air cooler temperature. Warning threshold exceeded.	Check CAC system and clean it. Check fan functionality. Check cooling perfomance with temperature measurement. !! If an error occurs, always check the delta P sensor and the Venturi tube for damage or contamination because problems at this point can lead to this result error.
412	3	Electrical error EGR cooler downstream temperature. Signal range check high.	Check wiring harness to TEGR-sensor. Exchange TEGR-sensor.
412	4	Electrical error EGR cooler downstream temperature. Signal range check low.	Check wiring harness to TEGR-sensor. Exchange TEGR-sensor.
523960	0	Physical range check high for EGR cooler downstream temperature.	EGR-Valve blocked open EGR-Valve actuator defect EGR-cooler defect (check for coolant water) Reed Valve defect Intake throttle blocked in closed position Exhaust pressure too high Check Nox-sensor upstream SCR catalyst dp venturi sensor defect. ! If an error occurs, always check the delta P sensor and the Venturi tube for damage or contamination because problems at this point can lead to this result error!
51	6	Actuator error EGR-Valve (2.9;3.6) or Throttle-Valve (4.1;6.1;7.8). Signal range check high.	Check wiring and repair or replace if necessary, check actuator with SERDIA test for EGR and if necessary replace it.

520521	5	Actuator error EGR-Valve (2.9;3.6) or Throttle-Valve (4.1;6.1;7.8); signal range check low.	Check wiring and repair or replace if necessary, check actuator with SERDIA test for EGR and if necessary replace it.
51	7	Actuator position for EGR-Valve (2.9;3.6) or Throttle-Valve (4.1;6.1;7.8) not plausible.	Threshold for error detection is an internal ECU threshold. Threshold for error detection, deviation from setpoint> 7%. Troubleshooting with SERDIA 2010 Use Case “EGR Diagnostic”.
51	6	Actuator error EGR-Valve (2.9;3.6) or Throttle-Valve (4.1;6.1;7.8); signal range check high	Check cabling, actuator defect, check actuator and if necessary replace it, check connection cable and if necessary repair or replace it.
51	5	Actuator error EGR-Valve (2.9;3.6) or Throttle-Valve (4.1;6.1;7.8); signal range check low	Check wiring, check cabels and repair or replace if necessary, check actuator with SERDIA 2010 test for EGR and if necessary replace it.
51	3	Position sensor error of actuator EGR-Valve (2.9;3.6) or Throttle-Valve (4.1;6.1;7.8). Signal range check high.	Check cabling, actuator defect, check actuator and if necessary replace it, check connection cable and if necessary repair or replace it.
51	4	Position sensor error actuator EGR-Valve (2.9;3.6) or Throttle-Valve (4.1;6.1;7.8). Signal range check low.	Check cabling, actuator defect, check actuator and if necessary replace it, check connection cable and if necessary repair or replace it.
4769	2	Temperature downstream DOC, plausibility error	Check ambient temaperature => value plausible? T downstream DOC sensor mounted within exhaust line? T downstream DOC sensor physically mounted in correct position downstream DOC? (Not upstream SCR or upstream DOC?) Other T-sensors show plausible values? No errors on them? Check temperature difference across DOC by Exh_tSensOxiCatDs-Exh_tSensOxiCatUs: <100 K? Check exhaust pipe downstream turbo charger for oil? Too many hydrocarbons in exhaust? White smoke (at hot EAT system, not at cold start)? Check air path of engine: EGR-Valve, Intake-Throttle, Turbocharger, Piping for leakage and correct function check injectors: is an injector got stuck?
4766	0	Temperature downstream DOC, temperature above upper shutoff threshold	Check temperature difference across DOC by Exh_tSensOxiCatDs-Exh_tSensOxiCatUs: <100 K? Check exhaust pipe downstream turbo charger for oil? Too many hydrocarbons in exhaust? White smoke (at hot EAT system, not at cold start)? Check air path of engine: EGR-Valve, Intake-Throttle, Turbocharger and Piping each for leakage and correct function Check injectors: is an injector got stuck? Exchange temperature sensor downstream DOC
4769	3	Sensor error exhaust gas temperature downstream (DOC); signal range check high	Check wiring harness to temperature sensor downstream DOC Exchange temperature sensor downstream DOC
4769	4	Sensor error exhaust gas temperature downstream (DOC); signal range check low	Check wiring harness to temperature sensor downstream DOC Exchange temperature sensor downstream DOC
4768	2	Temperature upstream DOC, plausibility error	Check ambient temperature => value plausible? upstream DOC sensor mounted within exhaust line? T upstream DOC sensor physically mounted in correct position upstream DOC? (Not upstream SCR or downstream DOC?) Check T upstream DOC sensor Check other T-sensors within EAT-system (Exh_tOxiCatDs & UCatUsT_tFlt_mp show plausible values? No errors on them?
4765	0	Temperature upstream DOC, temperature above upper shutoff threshold	Check air path of engine: EGR-Valve, Intake-Throttle, Check Turbocharger and Piping each for leakage and correct function Check injectors: is an injector got stuck? Exchange temperature sensor upstream DOC

4768	3	Electrical error exhaust gas temperature upstream (DOC); signal range check high	Check wiring harness to temperature sensor upstream DOC Exchange temperature sensor upstream DOC
4768	4	Electrical error exhaust gas temperature upstream (DOC); signal range check low	Check wiring harness to temperature sensor upstream DOC Exchange temperature sensor upstream DOC
4360	0	Exhaust temperature upstream SCR-Cat, temperature above upper physical threshold	Check temperature difference across DOC (Exh_tOxiCatDs-Exh_TOxiCatUs) at higher engine load => high difference> 100 K? If yes, the engine emitts too many Hydrocarbons => check injectors: is an injector got stuck? => Check EGR Valve If difference normal the exhaust out of the engie itself is too hot: => Check air path of engine: EGR-Valve, Intake-Throttle, Turbocharger and Piping each for leakage and correct function If that error was set while stand-still operation the error source could be exothermal soot burn off in DPF (which should not happen) => Dismount DPF and check it visually exchange temperature sensor upstream SCR
4360	1	Sensed exhaust temperature before SCR-Cat is <physical low limit	Cold start and ambient temperature <Threshold? Missdetection? Check wiring harness to UCatUsT-sensor Exchange UCatUsT-sensor
4361	3	Sensor error DEF catalyst exhaust gas temperature upstream; signal range check high	Check sensor. Check wiring. Replace UCatUsT-sensor
4361	4	Sensor error DEF catalyst exhaust gas temperature upstream; signal range check low	Check sensor Check wiring Replace UCatUsT-sensor
3361	6	DEF dosing valve; power at the end of injection too high	Check wiring Check the DEF dosing injection valve
3361	3	DEF dosing valve; short circuit to battery on low side	Threshold for error detection is an internal ECU threshold See substitute function Check the wiring
3361	4	Urea dosing valve; short circuit to ground or open load on low side	Check the wiring
4345	5	SCR heater relay DEF returnline primary side; open load	Threshold for error detection is an internal ECU threshold Check wiring Check heating element
4345	3	SCR heater DEF returnline; short circuit to battery	Threshold for error detection is an internal ECU threshold Check wiring . Check heating element
4345	4	SCR heater DEF returnline; short circuit to ground	Threshold for error detection is an internal ECU threshold Check wiring Check heating element
4343	5	SCR heater relay DEF pressureline primary side; open load	Threshold for error detection is an internal ECU threshold Check wiring Check heating element
4343	3	SCR heater DEF pressureline; short circuit to battery	Threshold for error detection is an internal ECU threshold Check wiring Check heating element
4343	4	SCR heater DEF pressureline; short circuit to ground	Threshold for error detection is an internal ECU threshold Check wiring Check heating element
523718	5	Tank heating valve; open load	Threshold for error detection is an internal ECU threshold Test tank heating valve Check cabling, if necessary replace relay.

523718	3	SCR main relay (primary side); short circuit to battery	Threshold for error detection is an internal ECU threshold Check wiring Check SCR main relay
523718	4	SCR main relay (primary side); short circuit to ground	Threshold for error detection is an internal ECU threshold Check wiring Check SCR main relay
4341	5	SCR heater relay DEF supply line primary side; open load	Threshold for error detection is an internal ECU threshold Check wire harness Check supply line
4341	3	SCR-heater DEF supplyline; short circuit to battery	Threshold for error detection is an internal ECU threshold Check wire harness Check supply line
4341	4	SCR-heater DEF supply line; short circuit to ground	Threshold for error detection is an internal ECU threshold Check wire harness Check supply line
523719	5	SCR heater relay DEF supplymodule primary side; open load	Threshold for error detection is an internal ECU threshold Check wiring Check cabling, if necessary replace supply module
523719	3	SCR heater DEF supplymodule; short circuit to battery	Threshold for error detection is an internal ECU threshold Check wiring Check cabling, if necessary replace supply module
523719	4	SCR heater DEF supplymodule; short circuit to ground	Threshold for error detection is an internal ECU threshold Check wiring Check cabling, if necessary replace supply module
4366	5	SCR tank heating valve primary side; open load	Threshold for error detection is an internal ECU threshold Check wiring Check urea tank heating valve
4366	3	SCR Tank heating valve; short circuit to battery	Threshold for error detection is an internal ECU threshold Check wiring Check urea tank heating valve
4366	4	SCR Tank heating valve; short circuit to ground	Threshold for error detection is an internal ECU threshold Check wiring Check urea tank heating valve
523632	11	Pump motor not available for actuation	Threshold for error is an internal ECU threshold
4375	5	Urea pump motor; open load	Threshold for error detection is an internal ECU threshold The hardware detects the presence of load on the PWM output power stage for the urea pump module actuator. Check wiring Check pump in the urea supply module
4375	3	Urea pump motor; short circuit to battery	Threshold for error detection is an internal ECU threshold The hardware detects absence of any short circuit to battery on the PWM output power stage for the urea pump module actuator Check wiring . Check pump in the urea supply module
4375	4	Urea pump motor; short circuit to ground	Threshold for error detection is an internal ECU threshold. The hardware detects a short circuit to ground error on the PWM output power stage for the UreaPump Module Motor Actuator. The error is updated by setting bit 1 of measuring point UP-mp-Mot_stPrevTstRslt_mp. Check wiring . Check pump in the urea supply module

4334	0	Supply module DEF, DEF pressure above upper physical threshold	Check the urea pump Check the supply module pressur sensor Clean the urea pump (filter)
523632	3	Sensor error urea pump pressure; signal range check high	Check wiring Check pressure sensor in urea supply module
523632	4	Sensor error urea pump pressure; signal range check low	Check wiring Check pressure sensor in DEF supply module
4376	5	SCR reversal valve; open load	Threshold for error detection is an internal ECU threshold Check wiring Check urea supply modul
4376	3	SCR reversal valve; short circuit to battery	Threshold for error detection is an internal ECU threshold Check wiring Check urea supply modul
4376	4	SCR reversing valve; short circuit to ground	Threshold for error detection is an internal ECU threshold Check wiring Check urea supply modul
3031	0	DEF tank, DEF temperature in DEF tank is to high.	Case “CANBUS sensor”: Check urea tank temperature: really hot? Check CANBus-message of DEF sensor urea tank temperature Com_dRxSCR2Byt2 Compare it to Com_dRxSCR1Byt1 (urea temperature at quality sensor) identical? Tank heater permantly on? Check wiring of DEF-quality sensor Case “analog DEF T & Level sensor”: Check urea tank temperature: really hot? Check urea tank temperature SCR_tSensUTnkT Compare urea tank temperature to EnvT_t or to SCR_tSMT (the urea temperature inside the supply module) identical? Tank heater permantly on? Check wiring of analog DEF T & Level sensor.
3031	1	DEF tank, DEF temperature below lower physical threshold	Case “CANBUS sensor”: Check ambient temperature EnvT_t => About -40°F (-40 °C)? If yes Error could be plausible Check CANBus-message of DEF sensor urea tank temperature Com_dRxSCR2Byt2 Compare it to Com_dRxSCR1Byt1 (urea temperature at quality sensor) identical? Check wiring of DEF-quality sensor Check quality sensor Case “analog DEF T & Level sensor”: Check urea tank temperature: really that cold? Check ambient temperature EnvT_t => About -40°F (-40 °C)? If yes Error could be plausible Check urea tank temperature SCR_tSensUTnkT Check wiring of analog DEF T & Level sensor Check analog DEF T & Level sensor
97	12	Water in fuel level prefilter; maximum value exceeded	Measure Voltage at Water in Fuel Sensor and renew harness if needed.
523612	12	Internal software error ECU	Threshold for error detection is an internal ECU threshold. Reflash ECU. If error is still activ replace ECU.
168	0	Physical range check high for battery voltage	Check alternator, regulator of alternator and if necessary replace it, check wiring and voltage of alternator.
168	1	Physical range check low for battery voltage	Check alternator, cabling, contact resistance, safety fuses, too high load in energy system, check battery and if necessary replace it.

172	1	Air inlet filter sensor out of physical range check	Cold start and ambient temperature <threshold Check wiring harness to AFST-sensor Exchange AFST-sensor
51	5	Actuator EGR-Valve (2.9;3.6) or Throttle-Valve (4.1;6.1;7.8); open load	Threshold for error detection is an internal ECU threshold. Check wiring, component, ECU Check repair with SerDia 2010 use case
51	6	Actuator EGR-Valve (2.9;3.6) or Throttle-Valve (6.1,7.8); over current	Threshold for error detection is an internal ECU threshold. Check wiring, component, ECU Check repair with SerDia 2010 use case
51	3	EGR-Valve (2.9;3.6) or Throttle-Valve (4.1;6.1;7.8); short circuit to battery	Threshold for error detection is an internal ECU threshold. Check wiring, component, ECU Check repair with SerDia 2010 use case
51	4	EGR-Valve (2.9;3.6) or Throttle-Valve (4.1;6.1;7.8); short circuit to ground	Threshold for error detection is an internal ECU threshold. Check wiring, component, ECU Check repair with SerDia 2010 use case
51	6	Actuator error EGR-Valve (2.9;3.6) or Throttle-Valve (4.1;6.1;7.8); Overload by short-circuit	Threshold for error detection is an internal ECU threshold. Check wiring, component
51	11	Power stage overtemperature due to high current.	Threshold for error detection is an internal ECU threshold. Check wiring, component
523984	3	UB7; Short circuit to battery error of actuator relay 7	Threshold for error detection is an internal ECU threshold. Check wiring harness and connected loads on pin A03. If error is still present, exchange ECU.
523986	4	UB6; Short circuit to ground actuator relais 6	Threshold for error detection is an internal ECU threshold. Check wiring harness and connected loads on pin A04 and A05. If error is still present, exchange ECU.
523987	4	UB7; Short circuit to ground actuator relay 7	Threshold for error detection is an internal ECU threshold. Check wiring harness and connected loads on pin A03. If error is still present, exchange ECU.
2797	4	Timeout of Short-Circuit Ground Diagnosis Cyl. Bank 0;_IVDiaShCirGndToutBnk_0	Threshold for error detection is an internal ECU threshold. Check wiring, component, ECU Note: affected injector has to be evaluated according to firing order
2798	4	Timeout of Short-Circuit Ground Diagnosis Cyl. Bank 1;_IVDiaShCirGndToutBnk_1	Threshold for error detection is an internal ECU threshold. Check wiring, component, ECU Note: affected injector has to be evaluated according to firing order
2797	4	Injector diagnostic; Short circuit to ground cylinder bank 0	Check wiring, component, ECU Note: affected injector has to be evaluated according to firing order.
164	2	Rail pressure safety function is not executed correctly ()	Threshold for error detection is an internal ECU threshold. Reset the fault and at reappearance check ECU and injection system
1136	0	Physical range check high for ECU temperature	Close warm air circuits, replace ECU
51	0	Warning threshold for an internal actuator error exceeded, <4L EGR actuator und >4L Air Intake Flap	The actual air mass flow is less than required value
51	1	Shut off threshold for an internal actuator error exceeded, <4L EGR actuator und >4L Air Intake Flap	Not used

3711	12	Temperature during stand-still main phase too low or too high	Check temperature upstream DOC Exh_tSensOxiCatUs within Stand-still:> 842°F / 450 °C? If not: => Check air path of engine: EGR-Valve, Intake-Throttle, Turbocharger and Piping each for leakage and correct function Check temperature difference across DOC by Exh_tSensOxiCatDs- Exh_tSensOxiCatUs within Stand-still: <212°F / 100°C? If not: Check exhaust pipe downstream turbo charger for oil? check injectors: is an injector got stuck? Too many hydrocarbons in exhaust? White smoke (at hot EAT system, not at cold start)? Check air path of engine: EGR-Valve, Intake-Throttle, Turbocharger and Piping each for leakage and correct function Check exhaust gas temperature sensors within EAT-system: T upstream DOCC, T downstream DOC & T upstream SCR catalyst all three of them can influence Phy_tPf-Wgh
524057	2	Fuel low pressure pump; error pressure build up	Threshold for error detection is an internal ECU threshold. Check low fuel pressure system (fuel feed pump, relay, fuse, wiring, sensor) and if necessary repair or replace it.
524074	9	NOx sensor downstream SCR-CAT, sensor internally open load	Threshold for error detection is an internal ECU threshold. Check NOx-Sensor downstream SCR catalyst: water inside? Shake out sensor after dismounting. => If water inside, replace sensor. Check mounting position of sensor and judge it regarding condense water formation / agglomeration. Check wiring harness Exchange sensor
524075	11	NOx sensor downstream SCR-CAT, sensor internally short circuit	Threshold for error detection is an internal ECU threshold. Check NOx-Sensor downstream SCR catalyst: water inside? Shake out sensor after dismounting. => If water inside, replace sensor. Check mounting position of sensor and judge it regarding condense water formation / agglomeration? Rearrange if critical and possible Check wiring harness Exchange sensor
524076	9	NOx sensor upstream SCR-CAT, sensor internally open line	Threshold for error detection is an internal ECU threshold. Check NOx-Sensor upstream SCR catalyst: water inside? Shake out sensor after dismounting. => If water inside, replace sensor. Check mounting position of sensor and judge it regarding condense water formation / agglomeration. Check wiring harness Exchange sensor
524077	11	NOx sensor upstream SCR-CAT, sensor internally short circuit	Threshold for error detection is an internal ECU threshold. Check NOx-Sensor upstream SCR catalyst: water inside? Shake out sensor after dismounting. => If water inside, replace sensor. Check mounting position of sensor and judge it regarding condenser water formation / agglomeration. Check wiring harness Exchange sensor
524078	9	NOx sensor downstream SCR-CAT, lambda value above upper physical threshold	Check whether NOx-sensor downstream SCR catalyst is physically mounted within the exhaust line Check Lambda values of NOx-sensor downstream SCR catalystat at idle conditions, ComRxSCR_rCanLamDs_mp> threshold? Compare to ComRxSCR_rCanLamUs_mp. Values must be almost identical Check CANBus of NOx-sensor downstream SCR catalyst Check NOx-sensor downstream SCR catalyst wiring Check NOx-sensor downstream SCR catalyst itself Replace NOx-sensor downstream SCR catalyst

524079	9	NOx sensor downstream SCR-CAT, lambda value below lower physical threshold	Compare to ComRxSCR_rCanLamUs_mp. ComRxSCR_rCanLamDs_mp must be almost identical! If almost identical, Check air path of engine: EGR-Valve, Intake-Throttle, Turbocharger and Piping each for leakage and correct function Check injection system of engine. Injector stuck? if sensed lambda upstream SCR higher (ComRxSCR_rCanLamUs_mp) : Diesel in Urea-tank? Check CANBus of NOx-sensor downstream SCR catalyst Check NOx-sensor downstream SCR catalyst wiring Check NOx-sensor downstream SCR catalyst itself Replace NOx-sensor downstream SCR catalyst
524080	9	NOx sensor upstream SCR-CAT, lambda value above upper physical threshold	Check whether NOx-sensor upstream SCR catalyst is physically mounted within the exhaust line Check Lambda values of NOx-sensor upstream SCR catalystat at idle conditions, ComRxSCR_rCanLamUs_mp <Threshold? Compare to ComRxSCR_rCanLamDs_mp. Must be almost identical Check CANBus of NOx-sensor upstream SCR catalyst Check NOx-sensor upstream SCR catalyst wiring Check NOx-sensor upstream SCR catalyst itself Replace NOx-sensor upstream SCR catalyst
524081	9	NOx sensor upstream SCR-CAT, lambda value below lower physical threshold	Check air path of engine: EGR-Valve, Intake-Throttle, Turbocharger and Piping each for leakage and correct function Check injection system of engine. Injector stuck? Check CANBus of NOx-sensor upstream SCR catalyst Check NOx-sensor upstream SCR catalyst wiring Check NOx-sensor upstream SCR catalyst itself Replace NOx-sensor upstream SCR catalyst
524063	5	Relay Urea backflow line heater: broken wiring detected (open load) in-line engine: SCR-backflow line (K29) V-engine: Master: SCR-suction / backflow line (K32.1) Slave: SCR-suction / backflow line (K32.2)	Check wiring, component
524063	3	SCR heater mainrelay; short circuit to battery	Check wiring, component
524063	4	SCR heater main relay load side (K31) on heating valve (Y31), Short cut to ground.	Disconnect plug from heating valve (Y31) and reset fault. If fault is still present you have to look in the wiring of Y31 to the control unit Pin A:92. If error is no longer present, you have to check the wiring of Y31 via relay K31 and possibly the heating cables and relay (K27-K30).

524065	0	Pressure sensor upstream SCR-CAT, pressure above upper physical threshold	Check for crystallisation in exhaust line upstream SCR and dwnstream of urea injector Check correct connection from exhaust line to pressure sensor upstream SCR catalyst: syphons? water in tube? water in sensor? Check that exhaust pipe outlet is free (downstream SCR catalyst) Check wiring of pressure sensor upstream SCR catalyst Check pressure sensor upstream SCR catalyst: sensor has no connection to vehicle body? => Ensure that sensor is free Does sensor oscillate heavely at engine low idle / high idle? => try to supress the oscillating Exchange pressure sensor upstream SCR catalyst Check calculated exhaust volume flow of engine within EDC: SCR_dvolSCRUs pausible? If not: Check T sensor upstream SCR catalyst, check complete engine air path: EGR-Valve, Intake throttle, turbocharger, piping for leakage and function Check SCR catalyst: Broken? Exchange SCR-Catalyst
524065	1	Pressure sensor upstream SCR-CAT, pressure below lower physical threshold	Check correct connection from exhaust line to pressure sensor upstream SCR catalyst: leakage? Check electric connector: 4h pin open / new connector type used? pressure exchange from inside electrical connector with the environemt possible Check exhaust line: any leakages upstream of SCR catalyst? Check wiring of pressure sensor upstream SCR catalyst Exchange pressure sensor upstream SCR catalyst Check calculated exhaust volume flow of engine within EDC: SCR_dvolSCRUs pausible? If not: Check T sensor upstream SCR catalyst, check complete engine air path: EGR-Valve, Intake throttle, turbocharger, piping for leakage and function Check SCR catalyst: Broken? Exchange SCR-Catalyst
524065	3	Pressure sensor upstream SCR-CAT; short circuit battery or open load	Check wiring of pressure sensor upstream SCR catalyst Check pressure sensor upstream SCR catalyst Exchange pressure sensor upstream SCR catalyst
524065	4	Pressure sensor upstream SCR-CAT; short circuit ground	Check wiring of pressure sensor upstream SCR catalyst. Check pressure sensor upstream SCR catalyst. Exchange pressure sensor upstream SCR catalyst
524067	0	DEF supply module, heater temperature above upper physical threshold	Compare SCR_tSMT with SCR_tSMHtrT. Both show the same value? Check urea tank temperature (SCR_tAdapUTnkT). Very hot (> 158°F / 70°C), urea tank heater permanet on? Does the pump never stop working? Check wiring to supply module Compare SCR_tSMT with SCR_tSMHtrT. Both show different values or urea tank temperature (SCR_tAdapUTnkT) is cold: exchange urea pump unit Supply module heater temperature sensor defect Supply module heater defect Supply module defect

524067	1	DEF supply module, heater temperature below lower physical threshold	Check ambient temperature EnvT_t <Threshold? Compare SCR_tSMT with SCR_tSMHtrT Check wiring with regard to supply modul heater exchange urea pump unit Supply module heater temperature sensor defect Supply module defect
524067	0	DEF supply module, temperature above upper physical threshold	Compare SCR_tSMT with SCR_tSMHtrT. Both show the same value? Check urea tank temperature (SCR_tAdapUTnkT). Very hot (>158°F / 70°C), ure tank heater permanet on? Does the pump never stop working? Check wiring to supply module Compare SCR_tSMT with SCR_tSMHtrT. Both show different values or urea tank temperature (SCR_tAdapUTnkT) is cold: exchange urea pump unit Supply module temperature sensor defect Supply module heater defect Supply module defect
524065	2	Pressure sensor upstream SCR-CAT, plausibility error	Check electric connector: 4h pin open / new connector type used? pressure exchange from inside electrical connector with the environemt possible? water in sensor? sensor frozen? Check wiring of pressure sensor upstream SCR catalyst Exchange pressure sensor upstream SCR catalyst Check intake manifold pressure sensor (Air_pCACDs) Check ambient pressure sensor (EnvP_p)
524147	13	SCR System, pressure build up not possible	Make sure that frozen lines, pump or tank can be excluded! Check whether there is urea in the urea tank Check urea lines: All lines connected? The right lines connected to the correct places? Suction line blocked? No leakage? Not also urea to the outside but also air into the lines, especially in the suction line! Perform service routine “pressure test”: Does the urea pump work? => check wiring harness & PWM signal for pump Does the urea pressure rise? DFC already healed? If all unsuccessful so far: Check urea pressure sensor: At ignition on and SCR system state = 0 (“Init check”), SCR_pAbsAdapUPmpP shall be identical to EnvP_p. Fulfilled: Sensor okay! Check reverting valve => see DFC_SCRCoRevVlvBlk Check pump filter: dirt inside?
524063	12	DEF supply modul, time for defrosting too long	Check Environment temperature sensor SCR supply module temperature sensor SCR supply module electrical heater

1761	14	DEF tank, DEF level below first warning threshold	Check urea level => if empty, then fill in urea Check DEF level sensor. If there is urea in the tank, then move the floater of the level sensor. The floater must be free. If you lift the sensor body, then SCRUTnk_rVol_mp must change. Exchange DEF level sensor, if no change of value or it's implausible.
524118	9	Timeout error of CAN-Receive-Frame ComRxCM1	Check CAN Bus cabling (Bus sheduling, polarity, short circuit, power interrupt), test protocol of receiver, check CAN functional range.
524104	9	Timeout error of CAN-Receive-Frame ComRxDPFCtl.	Threshold for error detection is an internal ECU threshold. Check CANBUS EAT Control Receive Message, PGN65348. CM1 Module Customer Recieve Message.
524133	2	HMI system; Set if digital input standstill release switch is blocked.	No detail information!
524134	0	DPF, ash load exceeds the shutoff threshold	Service needed to exchange DPF. Reason for that error is too much ash accumulated inside the DPF. The ash amount depends on total operation time of DPF and the consumtion of fuel, which was burned within the operation time.
524135	0	DPF, soot load exceeds the shutoff threshold	Service is required to conduct stand-still regeneration of DPF. DPF is overloaded with soot. Stand-still request has been ignored for a long time. Reason for overloaded DPF has to be clarified. The DPF itself cannot produce soot! Soot comes from engine and can be only burned within longer operation phases with exhaust temperatures>536°F / 280°C Check: Has the engine operated under low load for longer times> 50 h? If yes, that could explain the soot accumulation. If no, then check: - the differential pressure sensor of DPF. - the complete engine air path for leakage and function: EGR-Valve, Intake throttle, turbocharger, waste gate, intake air manifold, all tubes and pipes, dp-Venturi sensor, reed valve, EGR-cooler, air filter - the injection system of engine, Rail pressure injectors The reason for excessive soot emission of the engine has to be clarified. The new DPF will not change anything on the engine out soot emissions but give some time until it is also filled up with soot. ! If an error occurs, always check the delta P sensor and the Venturi tube for damage or contamination because problems at this point can lead to this result error!
2791	7	EGR actuator, actuator blocked	Threshold for error detection is an internal ECU threshold. Check the EGR actuator and EGR valve to mechanical blockage / clean. Check for free movement of the valve. If it'S blocked, then exchange the EGR valve.
2791	2	EGR actuator, CAN error	Threshold for error detection is an internal ECU threshold. Check other CAN bus components. If no message is sent, fix the wiring. If o.k. exchange EGR actuaror.
2791	13	EGR actuator, EOL calibration error	Threshold for error detection is an internal ECU threshold. Start Serdia Usecase to reset EGR actuator. Check EGR valve and mounting situation. If o.k. change EGR actuator.

2791	12	EGR Actuator, internal electrical fault.	1. Threshold for error detection is an internal ECU threshold. Exchange EGR actuator.
2791	13	EGR actuator, learning process aborted.	1. Threshold for error detection is an internal ECU threshold. Start Serdia Usecase to reset EGR actuator.
2791	6	EGR actuator current is above maximum threshold.	1. Check battery voltage. Check if EGR is blocked or not running smoothly. If everything is o.k. change EGR actuator.
2791	3	EGR actuator supply voltage is above the maximum threshold	Check battery voltage.
2791	4	EGR actuator supply voltage is below minimum threshold.	Check battery voltage.
2791	13	EGR actuator, learning process out of range	Threshold for error detection is an internal ECU threshold. Start Serdia Usecase to reset EGR actuator.
2791	7	EGR actuator, broken spring detected.	1. Threshold for error detection is an internal ECU threshold. Exchange EGR actuator.
2791	16	EGR actuator, temperature high.	Let EGR actuator cool down, check heat accumulation during worst case operation.
2791	0	EGR actuator, temperature critical high	Let EGR actuator cool down and check heat accumulation during worst case operation.
523612	12	Engine starter, plausibility error of starter release condition	Threshold for error detection is an internal ECU threshold. Check other active errors and fix them. Check all needed engine start conditions, e.g. neutral switch. Check the engine speed during starting of the engine. If it's too low, then check the battery voltage and then check the starter for malfunction.
524147	7	SCR-System, reverting valve blocked	Run SERDIA use-case "injection test" to ensure the urea injector works properly. Run SERDIA use-case "pressure test" to ensure the lines are filled with urea and supply module is working Run SERDIA use-case "empty service". The urea pump ressure, SCR_pAbsAdapUPmpP, must decrease below the urea pump pressure before the reverting valve was opened. Observe SCR_pAbsAdapUPmpP & SCR_stURevVlv (0 = closed, 1 = open) & SCR_rDycUdosVlv The error heals each time after SCR system status "emptying" (64) is successfully ended => debounce time 30 s. If the error is still active, then exchange supply module.

524175	0	SCR-CAT, Nox emissions above maximum threshold	- Check DEF level in tank which should be higner than 12%. - Check DEF quality ComRxSCR_rAdBlu which shall be above 32.5 %. If it's below 24, then it's diluted urea in tank or even water => Exchange the fluid in the tank with right DEF quality. - Check DEF supply module: perform pressure test => Replace supply module - Check DEF dosing valve => perform injector test => Clean injector with water => Repeat injector test => Replace injector- Check NOx sensor downstream SCR catayst: check wiring and sensor itself. At warm engine and warm EAT-system (SCRT_ tCatAvrgExhGs> 482°F / 250°C) in steady state, check sensed Nox-values: at ComRxSCR_stNOxRdyUs & ComRxSCR_stNOx-RdyDs, ComRxSCR_rNOxUs must be> ComRxSCR_rNOxDs. ComRxSCR_rNOxDs shall be <100 ppm in steady state operation. => Exchange NOx-Sensor downstream of SCR catalyst - Check engine air path: dp venturi sensor, EGR cooler, EGR-Valve, Intake throttle, Turbocharger, piping for function and leakage. EGR line blocked? - Check engine speed sensors: Are camshaft and crankshaft sensors defect? - Check injection system: Is calculation of engine torque correct? Exchange SCR catalyst Exchange DOC
524178	7	SCR System, DEF pressure out of range	Make sure that DEF lines, pump and tank are not frozen. Check for DEF level in the tank Check DEF lines: All lines connected? The right lines connected to the correct places? Suction line blocked? Is there any leakage? Not also urea to the outside but also air into the lines, especially in the suction line! Perform SERDIA usecase "pressure test": Does the DEF pump work properly? => check wiring harness & PWM signal for pump Does the DEF pressure rise? Is the error healed? If still unsuccessful so far: - Check DEF pressure sensor: At ignition on and SCR system state = 0 ("Init check"), SCR_pAbsAdapUPmpP shall be identical to EnvP_p. Fulfilled: Sensor okay! - Check reverting valve - Check DEF pump filter: dirt inside? Suspected components: DEF pump broken Reverting valve continously open DEF suction line, backflow line broken or connection swapped PWM Powerstage has a defect DEF pump pressure sensor broken
4334	2	DEF supply module pressure, plausibility error	Check environment pressure sensor (EnvP_p) => plausible value? Engine shut-off and immediately re-started? => Shut-off again. Wait until afterun of ECU has finished, re-Start engine Back-flow line free? Does the urea pump pressure show values <1000 hPa in SCR state emptying (64)? Check revision valve => Does the urea pump pressure show values <1000 hPa in SCR state emptying (64)? => exchange supply module Supply module pressure sensor defect => exchange supply module

524067	2	Supply module heater temperature, plausibility error	Compare SCR_tSMT with SCR_tSMHtrT, EnvT_t and CEngTds_t and SCR_tAdapUTnkT => All identical? If not: Has the machine been brought from cold environment into a warm one or vice versa without engine running, e.g. at workshop? Environment temperature sensor defect Coolant temperature sensor defect Supply module temperature sensor defect Problem at Supply module unit (broken?) => exchange supply module
1761	2	DEF tank level, plausibility error	Check the suction unit sensor for communicated values on CAN bus. Check the level sensor for plausible values. Check mechanical damage on the floater of the level gauge.
524152	2	Urea Quality Sensor; Timeout CAN message	Check eletrical connection oif urea quality sensor Check engine CAN bus Check urea quality sensor itself Exchange urea quality sensor
524153	2	Urea tank level & urea tank temperature via CAN bus, timeout of CAN message.	Check electrical connection of suction unit sensor (combined sensor with tank level and tank temperature) Check engine CAN bus Check level sensor itself Exchange suction unit
4768	2	Exhaust gas temperature sensors up- and downstream DOC are physically swapped	Check whether all exhaust gas temperature sensors within the EAT system are mounted properly: Within the exhaust line and at correct positions. Check the position of the sensor upstream SCR which might be physically mounted in the wrong position. If cold start condition can be made sure (engine was off for at least 8 h) compare values of EnvT_t, EngDa_tEng, Exh_TOxiCatUs, Exh_tOxiCatDs and SCR_tSensUCatUsT at ignition on, without starting the engine. All identical? Then the sensors itself are okay. Check exhaust piping for leakage. Check wiring of sensors Replace sensors Check DOC => physicallly intact?
524190	14	Inducement level 1 active	Depending on the error causing the inducement e.g. Check DEF level in tank. If there is no DEF, refill up to volume above the warning threshold. Check the DEF quality in the tank. If wrong fluid is filled, refill with proper DEF. Check other errors based on hardware malfunctions.
524191	14	Inducement level 2 active	Threshold for error detection is an internal ECU threshold. Check the DEF level in tank. If there is no DEF, refill up above the warning level. Check DEF quality filled in the tank. Check other errors based on hardware tampering or failure.

524193	8	The standstill-regeneration mode time exceeds the long limit threshold. Vehicle was too long or too often in standstill mode. Change oil and reset counter.	Read out stand-still statistics => see service manual: Stand-still operation finished or often interrupted by driver / engine shut-off? => Run stand-still and instruct operator Stand-still operation required often by soot load => Check dp DPF pressure sensor Stand-still mode does not reach required temperature level: Check engine air path: Intake Trottle, EGR-Valve and turbocharger okay? Any leakage in engine air intake sytem or exhaust gas system? Check temperature sensors within exhaust system: upstream DOC, downstream DOC If soot load level of DPf allow it: Perform Stand-still and check reached temperature level upstream and downstream DOC: T upstream DOC in the range of 896-1022°F (480-550°C)? Downstream DOC after 25 min stand-still main phase 1094°F (590°C) are reached? Temerature traces are steady and even? Temperature downstream DOC higher than upstream DOC but difference does not exceed 100 K? Very small difference (<10 K after 25 min stand-still main phase, 1094°F (590°C) downstream DOC are not reached) => exchange DOC Very big difference (>100 K after 25 min stand-still main phase, 1094°F (590°C) downstream DOC exceeded) => check injection system of engine & engine air path
524194	8	The standstill-regeneration mode time exceeds the short-limit. Vehicle was too long or too often within a short time in standstill mode. Change oil and reset counter.	Read out stand-still statistics => see service manual: Stand-still operation finished or often interrupted by driver / engine shut-off? => Run stand-still and instruct operator Stand-still operation required often by soot load => Check dp DPF pressure sensor Stand-still mode does not reach required temperature level: Check engine air path: Intake Trottle, EGR-Valve and turbocharger okay? Any leakage in engine air intake sytem or exhaust gas system? Check temperature sensors within exhaust system: upstream DOC, downstream DOC If soot load level of DPF allows it: Perform Stand-still and check reached temperature level upstream and downstream DOC: T upstream DOC in the range of 896-1022°F (480-550°C)? Downstream DOC after 25 min stand-still main phase 1094°F (590°C) are reached? Temperature traces are steady and even? Temperature downstream DOC higher than upstream DOC but difference does not exceed 100 K? Very small difference (<10 K after 25 min stand-still main phase, 1094°F (590°C) downstream DOC are not reached) => exchange DOC Very big difference (>100 K after 25 min stand-still main phase, 1094°F (590°C) downstream DOC exceeded) => check injection system of engine & engine air path

3519	12	DEF tank temperature, temperature too high	Check the temperature sensor signal for plausibility. In case of improper signal, exchange the suction unit in the tank. Check CAN bus communication for proper signal. In case of improper signal, exchange the suction unit in the tank. Check the function of heating valve and routing of the hoses. The coolant flow through the heating valve must be observed according to the shown arrow. In **case a**ll actions above are OK, check the real temperature in the DEF tank during worst case condition and improve the installation of the DEF tank.
3520	3	DEF quality sensor, short circuit to battery or open load.	Threshold for error detection is an internal ECU threshold. Check the wiring harness from the ECU to the suction unit of the DEF tank Check the CAN bus communication. If the signal is corrupt, then exchange the suction unit.
3520	4	DEF quality sensor, short circuit to ground.	Threshold for error detection is an internal ECU threshold. Check the wiring to the suction unit in the DEF tank. Check the CAN bus communication. In case the communication is corrupt, exchange the suction unit in the DEF tank.
3519	3	DEF quality sensor, internal temperature sensor short circuit to battery or open load.	Check the wiring to the suction unit in the DEF tank. Check the CAN bus communication of the suction unit. In case the communication is corrupt, exchange the suction unit.
3519	4	DEF quality sensor, internal temperature sensor short circuit to ground.	Check the wiring to the suction unit of the DEF tank. Check the CAN bus communication from the suction unit. In case the signal is corrupt, exchange the suction unit in the DEF tank.
524195	14	Standstill request due to crystalisation ignored too long.	Dismount urea injector from exhaust line and inspect visually the injector and the exhaust line for urea crystallisation upstream of SCR catalyst: If crystallisation can be clearly seen, then stand-still must be processed. Has the engine been operated in low load for longer time? If yes, then it could be the reaoson for crystallisation. Does the NOx-Sensors work properly? Compare ComRxSCR_rNOxUs to ComRxSCR_rNOxDs, when ComRxSCR_stNOxRdyUs = 1 & ComRxSCR_stNOxRdyDs = 1 (Warm engine and EAT-system, SCRT_tCatAvrgExhGs_mp> 482°F (250°C), SCR_stStatus = “Dosing” = 8): sensed NOx upstream of SCR catalyst must be higher than downstream of SCR catalyst. Go to idle and wait until SCR system enters status “stand-by” (no dosing), SCRT_tCatAvrgExhGs_mp <437°F (225°C): ComRxSCR_rNOxUs = ComRxSCR_rNOxDs Clean urea injector: rinse it thourougly under water Check EGR-Path: difference pressure sensor at venturi tube, EGR cooler, EGR-Valve, Reed-Valve, Intake throttle regarding function and leakage. Does the EGR-cooler leak water in the exhaust? Check air path for leakage Check turbocharger

3520	2	DEF quality sensor, Significantly diluted DEF or another liquid than DEF in the tank.	Check that there is liquid urea of known quality in the tank first Check urea tank level. Add urea until level is at least 10 cm above sensor. Ensure that urea is not frozen / sufficient urea is liquid Check Sensor: Are urea tank temperature and level displayed? Changes the level if you refill urea? Check electrical connection Check CANBus New quality detection is carried out if urea re-fill is detected or if an quality evaluation was triggered and was not finihed successfully: To provoke a quality measurement: refill urea, at least 10 % of tank volume Wait until quality evaluation was carried out, can take up to 30 minutes => check value. It should be about 33 % Exchange quality sensor
3520	8	DEF quality sensor, DEF quality cannot be measured within a certain time frame.	Clean sensor
3520	13	Urea quality at UQS invalid	Check DEF quality and/or DEF quality sensor
3519	13	Temperature at UQS invalid	Check temperature system and/or DEF quality sensor
3532	3	The DEF Level at UQS out of max. physical range	Check DEF quality and/or sensor.
3532	4	Quality at UQS out of min. physical range	Check DEF quality and/or Sensor.
4365	13	DEF qualitysensor, tank temperatur; Temperature out of physial range	Not used
4365	3	DEF qualitysensor, tank temperatur; Short circuit to battery or open load	Check wiring harness and DEF qualitysensor
4365	4	DEF qualitysensor, tank temperatur; Short circuit to ground	Check wiring harness and DEF qualitysensor
3936	14	Standstill request ignored too long.	Perform Stand-still. If soot load level of DPF has increased too high already call service to perform stand-still. In case the DPF soot load level remove DPF => Exchange DPF.
524267	14	Announcement triggers the Inducement Level 2.	Not used
524025	8	Max. launch time for stand still exceeded (60min).	Not used
4171	2	Dynamic temperature check of temperature before SCR.	Not used
524147	13	Set together with DFC_SCRCoBldUpLo-Pres. DFC_SCRCoBldUpLoPresRst is only used for inducement purposes. It ensures that legal inducement is working correctly.	See KWP 1639 (DFC_SCRCoBldUpLoPres) In addition for See DFC_SCRCoBldUpLoPresRst: Fix supply module. DFC_SCRCoBldUpLoPres & See DFC_ SCRCoBldUpLoPresRst heal by themselfs if proper urea pressure was build up once If that is not possible for some reason run service routine number 216 to reset all DFC2Restore-blocks
3520	1	Diluted DEF in the tank.	Replace DEF

9.2.Boom Troubleshooting

Problem	Possible Causes	Recommended Action
1. Boom will not extend or retract.	1. Broken hydraulic hose(s) or tube(s) and/or connections leaking.	1. Locate break, replace hose(s) or tube(s), tighten connections.
	2. Extend/retract hydraulic system not operating properly.	2. *Refer to Section — Hydraulic Circuits*,
	3. Faulty extend/retract cylinder.	3. Repair cylinder. *Refer to Section — General Cylinder Instructions*.
	4. Electrical System not operating properly.	4. *Refer to Section — Schematics*.
2. Boom shifts to right or left when extending.	1. Boom shifts to right or left when extending	1. Shim wear pads to correct gap. Replace wear pads as needed. *Refer to Section —Telescopic Boom Wear Pads*.
3. Excessive pivot pin noise and/or wear.	1. Insufficient lubrication.	1. Lubricate at regular intervals. *Refer to Section — Lubrication Schedule*. Replace worn pins as needed.
	2. Worn bushing(s).	2. Replace bearing(s) and lubricate at regular intervals *Refer to Section — Lubrication Schedule.*
4. Excessive Compensation cylinder pivot pin noise and/or wear.	1. Insufficient lubrication	1. Lubricate at regular intervals. *Refer to Section — Lubrication Schedule*. Replace worn pins as needed.
	2. Worn bushing(s)	2. Replace bushing(s) and lubricate at regular intervals.
5. Boom will not raise or lower	1. Broken hydraulic hoses or tubes and/or connection leaks.	1. Locate break, replace hose(s) or tube(s), tighten connections.
	2. Lift/lower hydraulic system not operating properly.	2. *Refer to Section — Hydraulic Circuits*.
	3. Faulty lift/lower cylinder	3. Repair cylinder. *Refer to Section — General Cylinder Instructions*.
	4. Seized boom pivot pin pivot.	4. Replace bushing.
	5. Electrical System not operating properly.	5. *Refer to Section — Schematics*.

6. Drooping chain, or jerky boom extend or retract functions.	1. Chain(s) tension not properly adjusted.	1. Adjust chain(s).
	2. Chain(s) stretched or binding.	2. Replace chains as needed. *Refer to Section — Boom Removal/ Installation*.
	3. Wear pads loose, contaminated, excessively worn or damaged.	3. Replace wear pad. *Refer to Section — Telescopic Boom Wear Pads*.
	4. Contaminated, corroded or rusted wear pad sliding surfaces.	4. Remove contamination and/or corrosion from wear pad sliding surfaces and lubricate. If the surfaces cannot be reconditioned, replace the boom section(s)
	5. Extend/retract hydraulic system not operating properly.	5. *Refer to Section — Hydraulic Circuits*.
	6. Damaged boom section.	6. Replace the damaged boom section.
7. Excessive Lift/Lower cylinder pivot pin noise and/or wear.	1. Insufficient lubrication.	1. Lubricate at regular intervals. *Refer to Section —Maintenance and Inspection Schedule*. Replace worn pins as needed. *Refer to Section — General Cylinder Instructions*.
	2. Worn self-aligning bushing(s).	2. Replace bushing(s) and lubricate at regular intervals. *Refer to Section — Lubrication Schedule*.
8. Rapid boom pad wear.	1. Incorrect wear pad gap.	1. Check wear pad gaps and correct as needed. *Refer to Section — Telescopic Boom Wear Pads*.
	2. Rapid cycle times with heavy loads.	2. Reduce cycle times.
	3. Contaminated, corroded or rusted wear pad sliding surfaces.	3. Remove contamination and/or corrosion from wear pad sliding surfaces and lubricate. If the surfaces cannot be reconditioned, replace the boom section(s).
	4. Operating in extremely dusty/abrasive conditions.	4. Clean equipment frequently
9. Auxiliary hydraulics will not operate.	1. Auxiliary hydraulic system not operating properly.	1. *Refer to Section — Hydraulic Circuits*.

10. Excessive chain wear.	1. Improper chain adjustment.	1. Adjust to correct tension. Replace chains as needed.
	2. Chain sheave(s) not properly lubricated.	2. Lubricate chain sheave. *Refer to Section — Maintenance and Inspection Schedule*.
	3. Chain sheave(s) not rotating freely.	3. Lubricate chain sheave. *Refer to Section —Maintenance and Inspection Schedule*. Repair or replace chain sheave(s) as needed.
	4. Improper chain lubrication.	4. Lubricate at regular intervals. *Refer to Section —Maintenance and Inspection Schedule*. Replace chains as needed.

9.3.Axle Assembly and Drive Shaft Troubleshooting

PROBLEMS	POSSIBLE CAUSES										
	1	2	3	4	5	6	7	8	9	10	11
- Wheel vibration; front tire resistance, halfshaft breakage.	*	*	*		*						*
- Steering is difficult; vehicle goes straight while its turning.	*	*	*	*							*
- No differential action; jamming while steering	*			*	*						*
- No differential action; jamming while steering.	*	*	*	*	*		*		*		*
- Uneven wear of tire.	*	*	*	*	*	*	*				*
- Friction noise.	*			*	*			*	*	*	*
- Vibration during forward drive, intermittent noise.	*	*	*								*

1 Incorrect installation / defective axle

Correct installation or repair or replace the differential in case it does not survive any one of the test phases.

2 Overloading/ incorrect weight distribution

Remove excessive weight and redistribute load, following instructions related to the vehicle.

3 Different rotation radius of the tires

If one tire has a smaller radius, it will cause partial wheel sliipping when force is applied. The other tire with bigger radius will have to support all the work. Replace the tyre or adjust pressure to have same radius on both tyre.

4 Broken halfshaft

It is not advisable to operate the vehicle with a broken halfshaft. It is acceptable to move the vehicle (engine off unloaded) a few meters away only.

5 Bent halfshaft

Replace halfshaft.

6 Blocked halfshaft

Abnormal functioning of the differential or breakage/ blockage of command device. Verify assembly and all components. Vehicles with wide steering angle may procceed with kicks, have steering difficulty or cause pneumatic wearing at sharp turns. Riduce the steering angle to minimum and decelerate when thw vehicle begins to kick.

7 Incorrect wheel adjustment

Verify group intregrity and wheel side bearings. Adjusting according.

8 Spoiled or worn out axle parts

Check the condition of ring gear, pinion gear, bearings etc. Replace when ever necessary.

9 Contamination in the axle box or incorrect assembly of parts

Look for foreign particles. Check assembly of the various parts of the axle.

10 Incorrect adjustment of bevel gearset: Parts of the transmission worn out.

(Transmission gears, U joints, etc) Replace or adjust as required.

11 Incorrect use of the product

See the vehicle producer ‘s instructions once again.

Problem	Cause	Recommended Action
Ring gear tooth broken at the outer side	1. Excessive gear load compared to the one foreseen 2. Incorrect gear adjustment (excessive backlash) 3. Pinion nut loosened	Replace bevel gear set Follow carefully the recommended operations for the adjustment of bevel gear set freebacklash
Ring gear tooth broken side	1. Load bump 2. Incorrect gear adjustment (insufficient backlash) 3. Pinion nut loosened	Replace bevel gear set Follow carefully the recommended operations for the adjustment of bevel gear set freebacklash.
Pinion or ring gear teeth or worn	1. Insufficient lubrication 2. Contaminated oil 3. Incorrect lubrication or depleted additives 4. Worn out pinion bearings that cause an incorrect pinion axle backlash and wrong contact between pinion and ring.	Replace bevel gear set. Follow carefully the recommended operations for the adjustment of bevel gear set freebacklash. Use correct lubricants, fill up to the right levels and replace according to the recommended program
Overheated ring and pinion teeth. See if gear teeth have faded	1. Prolong ed functioning at high temperatures 2. Incorrect lubrication 3. Low oil level 4. Contamined oil	Replace bevel gear set. Use proper lubrication, fill up to right level and replace at recommended program
Pinion teeth pitting	1. Excessive use 2. Insufficient lubrication	Replace bevel gear set. Use correct lubrication, fill up to the right level and substitute at recommended intervals
Axle beam body bent	1. Vehicle over loaded 2. Vehicle's accident 3. Load bump	Replace axle beam body
Worn out or pitted bearings	1. Insufficient lubrication 2. Contaminated oil 3. Excessive use 4. Normal wear out 5. Pinion nut loosened	Replace bearings. Use correct lubrication fill up, to the right level and replace at recommended intervals
Oil leakage form gaskets and seals	1. Prolonged functioning at high temperature of the oil 2. Oil gasket assembled incorrectly 3. Seal lip damaged 4. Contaminated oil	Replace the gasket or seal and matching surface if damaged. Use correct lubrication and replace at recommended intervals.
Excessive wearing out of input flange spline	1. Exhaustive use 2. Pinion nut loosened 3. Pinion axle backlash	Replace the flange. Check that the pinion spline is not excessively worn out. Replace bevel gear set if required.

Fatigue failure of pinion teeth See if the fracture line is well defined (wave lines, beach lines)	1. Exhaustive use 2. Continuos overload	Replace bevel gear set
Pinion and ring teeth breakage	1. Crash load of differential components	Check and/or replace other differential components.
Side gear spline worn out. Replace all scratched washers. (Exces. backlash)	Excessive use	Replace differential gear group. Replace halfshaft if required
Thrust washer surface worn out or scratched	1. Insufficient lubrication 2. Incorrect lubrication 3. Contaminated oil	Use correct lubrication and fill up to right level. Replace at intervals recommended. Replace all scratched washers and those with 0,04 in (0,1mm) thickness lower than the new ones.
Inner diameter of tapered roller bearing worn out.	1. Excessive use 2. Excessive pinion axial backlash 3. Insufficient lubrication 4. Contaminated oil	Replace bearing. Check pinion axial backlash. Use proper lubrication, fill up to right level and replace at recommended intervals.
Bent or broken halfshaft	Vehicle intensively operated or overloaded	Replace
Halfshaft broken at wheel side	1. Wheel support loosened 2. Beam body bent	Replace Check that wheel support is not worn out or wrongly adjusted.

Problem	Cause	Recommended Action
Noise while driving	1. Excessive backlash between pinion and ring gear 2. Worn out pinion and gear ring 3. Worn out pinion bearings 4. Pinion bearings loosened 5. Excessive axial pinion backlash 6. Worn out differential bearings 7. Differential bearings loosened 8. Ring gear out of roundness 9. Low lubricant level 10. Poor or wrong lubricant 11. Bent halfshaft	1. Adjust 2. Replace 3. Replace 4. Adjust 6. Replace 7. Adjust 8. Replace 9. Oil level 10. Replace 11. Replace
Noise while driving in neutral	1. Noise coming from axle are usually heard when vehicle moves in neutral gear but are not loud. 2. Incorrect backlash between pinion and ring (sound heard while decelerating disappears while increasing the speed) 3. Pinion or input flange worn out	Replace or adjust (see above) Replace Adjust
Intermittent noise	1. Ring gear damaged 2. Differential box bolts loosened	Replace bevel gear set Tighten to torque
Constant noise	1. Ring gear teeth or pinion damaged 2. Worn out bearings 3.Pinion spline worn out 4. Bent halfshaft	1. Replace bevel gear set 2. Replace 3. Replace 4. Replace
Noise while seering	1. Worn out differential gears 2. Worn out differential box or spider 3. Differential thrust washers worn out 4. Half shaft spline worn out	1. Replace 2. Replace 3. Replace 4. Replace

Problem	Cause	Recommended Action
1. Excessive axle noise while driving.	1. Oil level too low.	1. Fill oil to correct level. *Refer to Section — Fluid and Lubricant Capacities*.
	2. Axle and/or wheel end housings filled with incorrect oil or oil level low.	2. Drain axle and/or wheel end housings and fill to correct level. *Refer to Section — Fluid and Lubricant Capacities.*
	3. Incorrect alignment of ring and pinion gears.	3. Correct alignment by adding or removing shims as needed.
	4. Incorrect pinion (input) shaft bearing preload.	4. Correct bearing preload by adding or removing shims as needed.
	5. Worn or damaged bearings	5. Replace bearings as needed.
	6. Worn or broken gear teeth.	6. Replace gears as needed.
	7. Contamination in the axle.	7. Drain axle and/or wheel end housings and fill to correct level. *Refer to Section - Fluid and Lubricant Capacities*.
	8. Axle housing damaged.	8. Replace damaged parts.
2. Intermittent noise when traveling.	1. Universal joint(s) worn or damaged.	1. Repair or replace universal joints as needed.
3. Vibration or intermittent noise when traveling.	1. Drive shaft universal joint assembly(ies) incorrectly tightened.	1. Tighten capscrews to correct torque.
	2. Drive shaft universal joint(s) worn or damaged.	2. Repair or replace universal joints as needed.
	3. Drive shaft(s) damaged/ unbalanced.	3. Replace drive shaft(s) as needed.

4. Oil leaking from axle (differential housing and/ or axle housings).	1. Drain and/or inspection plugs loose and/or O-rings damaged or missing.	1. Replace O-rings as needed and tighten plugs to 96 lb-ft (130 Nm).
	2. Hose fittings loose	2. Tighten fittings.
	3. Axle shaft seal damaged or missing and/or worn or damaged shaft sealing surfaces.	3. Replace seal and/or joint coupling fork shaft (axle shaft).
	4. Input shaft multi-seal ring damaged or missing and/ or worn or damaged pinion (input) shaft sealing surfaces.	4. Replace multi-seal ring and/or input shaft. Adjust ring and pinion alignment and bearing preload as described in the manufacturer Service Manual.
	5. Axle casing to brake housing and/ or brake housing to differential assembly O-rings and/or seals worn or damaged.	5. Replace O-rings and seals.
	6. Axle housing mounting nuts and capscrews loose.	6. Tighten housing nuts and capscrews. Refer torque value described in the manufacturer Service Manual.
	7. Differential and/or axle housing(s) damaged.	7. Replace housing(s) as needed.
5. Oil leaking from wheel end housing (planet carrier).	1. Oil level plugs loose and/ or O-rings damaged or missing.	1. Replace O-rings as needed and tighten plugs to 44 lb-ft (60 Nm).
	2. O-ring between hub and housing (planet carrier) damaged or missing.	2. Replace O-ring.
	3. Shaft seal damaged or missing and/or worn or damaged shaft sealing surfaces.	3. Replace seal and/or fork joint shaft.
	4. Housing capscrews loose.	4. Tighten housing capscrews to 41 lb-ft (55 Nm).
	5. Housing (planet carrier) damaged.	5. Replace housing (planet carrier).
6. Oil leaking from steering cylinder.	1. Hose fittings loose.	1. Tighten fittings.
	2. Steering cylinder O-rings and/or seals worn or damaged.	2. Replace O-rings and seals.
	3. Piston rod seal worn or damaged.	3. Replace piston rod seal.
	4. Cylinder tube damaged.	4. Replace cylinder tube.

7. Axle overheating.	1. Oil level too high.	1. Fill oil to correct level. *Refer to Section — Fluid and Lubricant Capacities*.
	2. Axle and/or wheel end housings filled with incorrect oil or oil contaminated or oil level low.	2. Drain axle and fill to correct level. *Refer to Section — Fluid and Lubricant Capacities*.
	3. Dragging park brake.	3. Adjust park brake cable as needed. Refer to Section Note: “Service brake circuit will need to bled after axle installation. *Refer to Section — Fluid and Lubricant Capacities*, for detailed instructions.”
8. High steering effort required.	1. Steering (hydraulic) system not operating properly.	1. *Refer to Section — Hydraulic Circuits*.
	2. Excessive joint housing swivel bearing preload.	2. Correct bearing preload by adding or removing shims as needed.
	3. Worn or damaged swivel bearings.	3. Replace swivel bearings as needed.
9. Slow steering reponse.	1. Steering (hydraulic) system not operating properly.	1. Check brake discs for wear. *Refer to Section — Hydraulic Circuits*.
	2. Steering cylinder leaking internally.	2. Repair or replace steering cylinder as needed.
10. Excessive noise when brakes are engaged.	1. Brake discs worn.	1. Check brake discs for wear.
	2. Brake discs damaged.	2. Replace brake discs.
11. Brakes will not engage.	1. Brake (hydraulic) system not operating properly.	1. *Refer to Section — Hydraulic Circuits*.
	2. Brake piston O-rings and seals damaged (leaking).	2. Replace O-rings and seals.
12. Brakes will not hold the machine or braking power reduced.	1. Brake discs worn.	1. Check brake discs for wear.
	2. Brake piston O-rings and seals damaged (leaking).	2. Replace O-rings and seals

9.4.Transmission Troubleshooting

DTC	SPN	FMI	Meaning	Detection	Cause/ Checks	Recommended Action
14	177	0	Open circuit on transmission oil temperature signal. CTC_TEMP_ HIGH	High resistance at TCU input pin.	Open circuit on cable. Short circuit to a voltage above 5V on cable Faulty temperature sensor. Check temperature sensor cable. Change temperature sensor	Warning lamp RED. Oil temperature is set to the default value (140°F/60°C) with a transient lasting about 3 seconds. Error reset with key off.
15	177	1	Short circuit on transmission oil temperature signal. CTC_TEMP_ LOW	Low resistance at TCU input pin.	Short circuit to ground on cable. Faulty temperature sensor. Check temperature sensor cable. Change temperature sensor.	Warning lamp RED. Oil temperature is set to the default value (140°F/60°C) with a transient lasting about 3 seconds. Error reset with key off.
21	158	4	Power supply undervoltage. CTC_POWER_ UNDERVOLTAGE	The voltage supply is less than a value included in the range [8.4 – 9.7] V for more than 2.5s.	Power supply undervoltage. Check power supply line. Replace the TCU.	Warning lamp AMBER Error reset with failure solved. NOTE If voltage supply falls below 8.2V, TCU will switch off.
22	158	3	Power supply overvoltage. CTC_POWER_ OVERVOLTAGE	The voltage supply is more than a value included in the range [15.2 – 17.6] V for more than 2.5s.	Power supply overvoltage. Check power supply line. Replace the TCU.	Warning lamp AMBER Error reset with failure solved.

23	3509	1	Sensor supply undervoltage CTC_SENS_UNDERVOLTAGE	Sensor supply voltage less than 4.5V for more than 200ms.	Short circuit to ground on sensor supply cable. Internal TCU power supply damage. Check sensor supply cable. Replace the TCU.	Warning lamp RED. Pre-reaction: Open Master Reaction (<4km/h): Neutral backup. Error reset with kry off.
24	3509	0	Sensor supply overvoltage CTC_SENS_OVERVOLTAGE	Sensor supply voltage greater than 5.5V for more than 200ms	Short circuit to a voltage above 5V on sensor supply cable. Internal TCU power supply damage. Check sensor supply cable. Replace the TCU.	Warning lamp RED. Pre-reaction: Open Master Reaction (<4km/h): Neutral backup. Error reset with kry off.
25	522011	5	HW error on valve FWDL. CTC_PWM_FWDL_HWERR	The hardware detects an over-current event (current higher than a threshold value) on the PWM 1 output. The hardware detects an open circuit event on the PWM output.	Short circuit to ground. Power supply undervoltage. Open circuit on valve. Check valve cable for short circuit to ground. Check valve cable for missing connection. Check power supply line. Replace the TCU.	Warning lamp RED Pre-reaction: Open Master Reaction (<4km/h): Limp-home mode 2. Error reset with key off

26	522013	5	HW error on valve FWDH. CTC_PWM_ FWDH_HWERR	The hardware detects an over-current event (current higher than a threshold value) on the PWM 3 output. The hardware detects an open circuit event on the PWM output.	Short circuit to ground. Power supply un-dervoltage. Open circuit on valve. Check valve cable for shortcircuit to ground. Check valve cable for missing connection. Check power supply line. Replace the TCU.	Warning lamp RED Pre-reaction: Open Master Reaction (<4km/h): Limp-home mode 3. Error reset with key off
27	522012	5	HW error on valve REV. CTC_ PWM_REV_ HWERR	The hardware detects an over-current event (current higher than a threshold value) on the PWM 2 output. The hardware detects an open circuit event on the PWM output.	Short circuit to ground. Power supply undervolt-age. Open circuit on valve. Check valve cable for short circuit to ground. Check valve cable for missing connection. Check power supply line. Replace the TCU.	Warning lamp RED Pre-reaction: Open Master Reaction (<4km/h) Limp-home mode 2 limited to the forward direction movement. Error reset with key off.

28	522014	5	HW error on valve KPROP. CTC_PWM_ KPROP_HWERR	The hardware detects an over-current event (current higher than a threshold value) on the PWM 4 output. The hardware detects an open circuit event on the PWM output.	Short circuit to ground. Power supply un-dervoltage. Open circuit on valve. Check valve cable for short circuit to ground. Check valve cable for missing connection. Check pow-er supply line. Re-place the TCU.	Warning lamp RED Pre-reaction: Open Master Reaction (<4km/h): Neutral backup. Error reset with key off.
29	522021	5	HW error on valve Digital K1. CTC_K1_ HWERR	The hardware detects an over-current event (current higher than a threshold value) on the K1 valve output. The hardware detects an open circuit event on the digital HS out-put.	Short circuit to ground. Power supply un-dervoltage. Open circuit on valve. Check valve cable for short circuit to ground. Check valve cable for missing connection. Check pow-er supply line. Re-place the TCU.	Warning lamp RED Pre-reaction: Open Master Reaction (<4km/h): Limp-home mode 3. Error reset with key off.

30	522022	5	HW error on valve Digital K2. CTC_K1_ HWERR	The hardware detects an over-current event (current higher than a threshold value) on the K2 valve output. The hardware detects an open circuit event on the digital HS output.	Short circuit to ground. Power supply un-dervoltage. Open circuit on valve. Check valve cable for short circuit to ground. Check valve cable for missing connection. Check power supply line. Replace the TCU.	Warning lamp RED Pre-reaction: Open Master Reaction (<4km/h): Limp-home mode 2. Error reset with key off.
52	629	12	TCU internal hardware dam-age or program sequence mon-itoring error CTC_UNCOVER-ABLEERROR	Severe error on in-ternal TCU hardware mainly related to ADC hardware conversion or software execution error. TEMPORAL execution program monitoring detects if instructions are not fully executed within logic execution time (task). LOGICAL execution program monitoring detects if system main states are not executed in the correct order.	Wrong TCU connections causing overvoltages or overcur-rents that produce TCU internal hardware damage. Old electronic hardware. ---------- ---------- Check pins connections. Check power supply line. Replace TCU.	Warning lamp RED Pre-reaction: Open Master Reaction (<4km/h): Neutral backup. Error reset with key off.

53	630	12	Flash data are corrupted. CTC_ MINORINTER-NALERROR	Stored data are not congruent or corrupted.	TCU not restarted after reprogramming Ignition key not correctly connected to TCU pin. Low power supply voltage at engine off. Damaged TCU. Restart TCU. Check ignition key connection. Check power supply line. Replace TCU.	Warning lamp RED Pre-reaction: Open Master Reaction (<4km/h): Neutral backup. Error reset with key off.
61	177	10	Erratic transmission oil temperature signal. CTC_TEMP-VARIATION_FAIL	122°F (50°C) temperature signal variation on short time.	Temperature sensor is not correctly connected at TCU pin. Faulty temperature sensor. Check temperature sensor cable. Change temperature sensor.	Warning lamp RED Oil temperature at default value 140°F (60°C). Error reset with key off.
62	177	15	Transmission oil overtemperature CTC_OIL_ TOOHOT	Oil temperature over 212°F (100°C)	Cool down transmission oil	Warning lamp AMBER Error reset with failure solved.
63	177	17	Transmission oil undertemperature CTC_OIL_TOO-COLD	Oil temperature under -22°F (-30°C)	Warm up transmission oil	Warning lamp AMBER Error reset with failure solved.

64	127	1	Kprop pressure fail CTC_NO-PRESSURE	Engine running, Kprop valve energized and no pressure for more than 10s.	Line pressure under 145 psi (10 bar) Kprop valve stuck closed Check line pressure Check Kprop valve	Warning lamp RED Pre-reaction: Freeze Gear. Reaction (<4km/h): Neutral backup. Error reset with key off.
65	127	17	Warning for freezed transmission oil due to extreme cold conditions CTC_NOPRESSURE4COLD	Oil temperature<5°F (-15°C), engine running, Kprop valve energized and no pressure for more than 10s.	Transmission oil freezed Warm-up the driveline: engine running on Neutral.	Warning lamp AMBER Gear engagement inhibition till failure disappears. Error reset with failure solved.
66	127	5	K pressure sensor is disconnected or faulty CTC_KPRESSSENSOR_FAIL	Engine NOT running, Kprop valve NOT energized and line pressure presence for more than 1s	Disconnected pressure switch Faulty pressure switch. Check pressure switch cable. Change pressure switch.	Warning lamp AMBER Error reset with key off
67	788	3	Kprop valve stuck open CTC_KPROPSTUCKOPEN_FAIL	Engine running, Kprop valve NOT energized and line pressure presence	Faulty Kprop valve Kprop valve shorted to power supply Check Kprop valve cable. Change Kprop valve.	Warning lamp RED Pre-reaction: Open Master Reaction (<4km/h): Neutral backup. Error reset with key off.

68	526	7	Wrong transmission ratio CTC_WRONGRATIO	Driveline engaged, Transmission Input speed>100rpm, Transmission Output speed>100rpm and actual transmission ratio not consistent with speed sensor signals for more than 200ms	Wrong driveline configuration Faulty harness Faulty input speed sensor Faulty output speed sensor Check driveline configuration Check harness Check input speed sensor signal Check output speed sensor signal	Warning lamp RED Pre-reaction: Open Master Reaction (<4km/h): Neutral backup. Error reset with key off.
69	190	1	Engine speed signal not consistent with main ring pressure CTC_SPDENG_FAIL	Engine speed is at 0rpm and line pressure presence for more than 2s.	Wrong engine speed signal Check engine speed signal.	Warning lamp RED Pre-reaction: Freeze gear Reaction (<4km/h): Limp-home mode 3. Error reset with key off.
70	191	10	Transmission output shaft speed signal loss CTC_FREQTX-OUT_FAIL	Speed signal decrease 500Hz with a rate less than- 30Hz/ms	Faulty speed sensor Faulty speed sensor harness Check speed sensor Check speed sensor harness	Warning lamp RED Pre-reaction: Freeze gear Reaction (<4km/h): Neutral backup. Error reset with key off.

71	161	8	Transmission Input Speed signal fail CTC_SPDTX-IN_FAIL	Driveline engaged, Transmission Input speed100rpm and actual transmission ratio not consistent with speed sensor signals for more than 1s.	Faulty harness. Faulty input speed sensor Check harness Check input speed sensor signal	Warning lamp RED Pre-reaction: Open Master Reaction (<4km/h): Neutral backup. Error reset with key off.
72	191	8	Transmission Output Speed signal fail CTC_ SPDTXOUT_ FAIL	Driveline engaged, Transmission Input speed>100rpm, Transmission Output speed	Faulty harness Faulty output speed sensor Check harness Check output speed sensor signal	Warning lamp RED Pre-reaction: Open Master Reaction (<4km/h): Neutral backup. Error reset with key off.
73	630	12	Hystoric or statistic flash data are not congruent or corrupted. CTC_ HYST_DATA_ FAIL	Hystoric or statistic stored data are not congruent or corrupted. These kinds of data are stored at key off before the complete shut down TCU.	Ignition key not correctly connected to TCU pin. Low power supply voltage at engine off. Damaged TCU. Check ignition key connection. Check power supply line. Replace TCU.	Warning lamp AMBER Data are restored at default value. Error reset with key off.

74	604	2	FNR lever error CTC_FNRLEVER_ERR	Gear requested are not coeherent with expected.	CAN communication problem Wrong SW version installed Check CAN communication Check SW version	Warning lamp RED Pre-reaction: Open Master Reaction (<4km/h): Neutral backup. Error reset with key off.
74	604	31	FNR lever warning CTC_FNRLEVER_WNG	FNR inputs are not coeherent with expected inputs.	Faulty FNR lever wiring Wrong SW version installed Check SW version Check FNR wiring	Warning lamp AMBER Error reset with failure solved.
75	683	7	Driveline not disengaged at Neutral request CTC_NEUTRAL_FAIL	Driveline not disengaged at Neutral selection. Driveline is considered not disengaged if after init with engine running and system pressure presence: engine speed – input shaft speed> Threshold (engine speed) AND | SpdTxIn – SpdTxOut*PreviousEngaged GearRatio | <50rpm Threshold is function of engine speed: Engine speed-> Threshold 1000rpm-> 400rpm 1500-> 200 rpm 2000-> 120rpm 2500-> 120rpm Detection time is 200ms. Diagnostic does not work when SafeNeutral is applied.	Hydraulic problem Electric problem Mechanic problem Check driveline system	Warning lamp RED Pre-reaction: Open Master Reaction (<4km/h): Neutral backup. Error reset with key off.

76	522043	2	Forward High clutch PWM control error CTC_FWDH_PWMCTRL_FAIL	PWM3 control error more than 70mA for more than 200ms.	Valve disconnected Faulty valve cable Check valve connection Check valve cable	Warning lamp RED Pre-reaction: Open Master Reaction (<4km/h): Neutral backup. Error reset with key off.
77	522041	2	Forward Low clutch PWM control error CTC_FWDL_PWMCTRL_FAIL	PWM1 control error more than 70mA for more than 200ms.	Valve disconnected Faulty valve cable Check valve connection Check valve cable	Warning lamp RED Pre-reaction: Open Master Reaction (<4km/h): Neutral backup. Error reset with key off.
78	522042	2	Reverse clutch PWM control error CTC_REV_PWMCTRL_FAIL	PWM2 control error more than 70mA for more than 200ms.	Valve disconnected Faulty valve cable Check valve connection Check valve cable	Warning lamp RED Pre-reaction: Open Master Reaction (<4km/h): Neutral backup. Error reset with key off.
79	522043	2	Kprop clutch PWM control error CTC_KPROP_PWMCTRL_FAIL (TSR1.1.2.4 and related)	PWM4 control error more than 70mA for more than 200ms.	Valve disconnected Faulty valve cable Check valve connection Check valve cable	Warning lamp RED Pre-reaction: Open Master Reaction (<4km/h): Neutral backup. Error reset with key off.

80	6031	9	Timeout on EEC1 message reception CTC_CAN_EEC1_MISSING	EEC1 CAN message not received for more then: 20s before system init 200ms after system init	Problem on Engine Controller ECU Problem on CAN network Check Engine Controller ecu Check CAN network	Warning lamp RED Pre-reaction: Freeze gear Reaction (<4km/h): Limp-home mode 3. Error reset with key off.
82	190	16	Engine speed does not follow derating command. CTC_DERATING_FAIL	During shuttling reverse rotating condition, engine speed is 200rpm over engine speed derating limit for more than: 550ms for SpdTxIn <= 2450rpm 950ms for SpdTxIn>= 2600rpm and their linear interpolation for 2450rpm <SpdTxIn <2600rpm	Problem on Engine Controller ECU Problem on CAN network Check Engine Controller ecu Check CAN network	Warning lamp AMBER Pre-reaction: Force-2Garage Reaction (<4km/h): Limp-home mode 3. Error reset with key off.
83	161	15	Shuttling carousel fail. CTC_CAROUSEL_FAIL	Vehicle speed does not decrease as expected or input shaft speed over 3500rpm	Misuse	Warning lamp RED Error reset with failure solved after 5s.
84	525	31	Gear Selector wiring fail. CTC_GEARSEL_FAIL_WNG	Gear selector request is not expected or decoded incorrectly	Problem on Gear selector Wrong Gear selector component Wrong SW version installed Check Gear selector (use debug I/O to help) Check wiring Check SW version installed	Warning lamp AMBER Error reset with failure solved

93	630	13	Failed to validate transmission specific calibration data: -TCU has never been calibrated since (re-) programming CTC_CALIB_DATA_FAIL_FACTORY	Calibration data is at default condition with a newly programmed TCU (factory default). Calibration data has time tag different from code tag Calibration status set to 0x03.	Factory TCU unit. Old electronic hardware. Repeat the calibration procedure. Reprogram TCU.	Warning lamp AMBER Pre-reaction: None. Using default calibration parameters. Calibration time variable cleared to zero. Error reset with key off.
94	630	11	Failed to validate transmission specific calibration data: -calibration data has been explicitly reset to default value CTC_CALIB_DATA_FAIL_RESET	Calibration data is at default condition due to a explicit reset request by ECU. Calibration time variable set to 1. Calibration status set to 0x01.	Explicit reset request by ECU. Repeat the calibration procedure. Reprogram TCU.	Warning lamp AMBER Pre-reaction: None. Using default calibration parameters. Error reset with key off.
95	630	2	Failed to validate transmission specific calibration data: -corruption of calibration data zone CTC_CALIB_DATA_FAIL_CORRUPT ED	At the end of the flash writing procedure, the data are not written inside the permanent memory of the ECU in a correct way. Checksum error or block congruency check error or calibration time set to zero.	Explicit reset request by ECU. Power supply under voltage during writing-to-flash at the end of calibration procedure. Old electronic hardware. Repeat the calibration procedure. Check power supply line. Replace TCU.	Warning lamp AMBER Pre-reaction: None. Using default calibration parameters. Error reset with key off.
96	522051	12	Failed to read or write from serial line CTC_SERIAL_LINE_ERROR	At serial connections, packets are corrupted	Serial wiring incorrect. Check serial wiring.	Warning lamp AMBER Error reset with key off.

Signal	Csontent	Start bit	Length	Scale	Range	Values	Cause/Checks
Application Working Mode	Current TCU working mode: NORMAL = no fault present LIMPHOME2 LIMPHOME3 LIMPHOME2FWD NEUTRAL BACKUP (refer to Reactions for explanation)	0	5 bit	5 states/5 bit 0 offset	1 to 5	0x00 = N.A 0x01 = NORMAL 0x02 =LIMPHOME2 0x03 = LIMPHOME3 0x04 = LIMPHOME2FWD 0x05 = NEUTRALBKP	(Refer to Reactions for explanation)
Temp Variation	If Bit High, Temperature has varied more than 122°F (50°C) within 5ms	5	1 bit	2 states/1 bit 0 offset	0 to 1	00 = No Error 01 = Error	Check Temperature sensor, probably detached.
Temp High	If Bit High, Temperature is higher than 212°F (100°C) for more than 5 s	6	1 bit	2 states/1 bit 0 offset	0 to 1	00 = No Error 01 = Error	None (warning). Check Temperature sensor.
Temp Low	If Bit High, Temperature is lower than -22°F (-30°C) for more than 5 s	7	1 bit	2 states/1 bit 0 offset	0 to 1	00 = No Error 01 = Error	None (warning). Check Temperature sensor.
Open Master	Pre-Reaction (see Pre-Reactions)	8	1 bit	2 states/1 bit 0 offset	0 to 1	00 = No Error 01 = Error	(Refer to Pre-Reactions)
Freeze Gear	Pre-Reaction (see Pre-Reactions)	9	1 bit	2 states/1 bit 0 offset	0 to 1	00 = Not Active 01 = Active	(Refer to Pre-Reactions)
Force Garage	Pre-Reaction (see Pre-Reactions)	10	1 bit	2 states/1 bit 0 offset	0 to 1	00 = Not Active 01 = Active	(Refer to Pre-Reactions)
FNR lever Fail	Gear request signal unexpected values	11	1 bit	2 states/1 bit 0 offset	0 to 1	00 = No Error 01 = Error	Check FNR connections Lever stuck
No Pressure	Engine running, Kprop valve energized and no pressure for more than 10s.	12	1 bit	2 states/1 bit 0 offset	0 to 1	00 = No Error 01 = Error	Line pressure under 145 psi (10 bar) Kprop valve stuck closed Check line pressure Check Kprop valve
K Press Sensor Fail	Engine NOT running, Kprop valve NOT energized and line pressure presence for more than 1s	13	1 bit	2 states/1 bit 0 offset	0 to 1	00 = No Error 01 = Error	Disconnected pressure switch Faulty pressure switch. Check pressure switch cable. Change pressure switch.
Carousel Fail	Vehicle speed does not decrease as expected or input shaft speed over 3500rpm	14	1 bit	2 states/1 bit 0 offset	0 to 1	00 = No Error 01 = Error	Misuse Check system configuration

Signal	Csontent	Start bit	Length	Scale	Range	Values	Cause/Checks
Temp Low Ohm	Low resistance at TCU input pin.	15	1 bit	5 states/5 bit 0 offset	0 to 1	00 = No Error 01 = Error	Open circuit on cable. Short circuit to a voltage above 5V on cable Faulty temperature sensor. Check temperature sensor cable. Change temperature sensor.
Freq Tx Out Fail	Speed signal decrease 500Hz with a rate less than -30Hz/ms	17	1 bit	2 states/1 bit 0 offset	0 to 1	00 = No Error 01 = Error	Transmission oil freezed Warm-up the driveline: engine running on Neutral.
Wrong Ratio	Driveline engaged, Transmission Input speed>100rpm, Transmission Output speed>100rpm and actual transmission ratio not consistent with speed sensor signals for more than 200ms	20	1 bit	2 states/1 bit 0 offset	0 to 1	00 = No Error 01 = Error	Wrong driveline configuration .Faulty harness. Faulty input speed sensor .Faulty output speed sensor. Check driveline configuration. Check harness. Check input speed sensor signal. Check output speed sensor signal
EngSpdFail	Engine speed is at 0rpm and line pressure presence for more than 2s.	21	1 bit	2 states/1 bit 0 offset	0 to 1	00 = No Error 01 = Error	Wrong engine speed signal Check engine speed signal.
SpdTxInFail	Driveline engaged, Transmission Input speed100rpm and actual transmission ratio not consistent with speed sensor signals for more than 1s.	22	1 bit	2 states/1 bit 0 offset	0 to 1	00 = No Error 01 = Error	Faulty harness. Faulty input speed sensor Check harness Check input speed sensor signal
SpdTxInFail	Driveline engaged, Transmission Input speed100rpm and actual transmission ratio not consistent with speed sensor signals for more than 1s.	23	1 bit	2 states/1 bit 0 offset	0 to 1	00 = No Error 01 = Error	Faulty harness. Faulty input speed sensor Check harness Check input speed sensor signal
DeratingFail	During shuttling reverse-rotating condition, engine speed is 200rpm over engine speed derating limit for more than: 550ms for SpdTxIn <= 2450rpm	24	1 bit	2 states/1 bit 0 offset	0 to 1	00 = No Error 01 = Error	

Signal	Csontent	Start bit	Length	Scale	Range	Values	Cause/Checks
DeratingFail	During shuttling reverse-rotating condition, engine speed is 200rpm over engine speed derating limit for more than: 550ms for SpdTxIn <= 2450rpm	24	1 bit	2 states/1 bit 0 offset	0 to 1	00 = No Error 01 = Error	Problem on engine ECU Problem on CAN network- Check UCM ecu Check CAN network
FwdH_ctrlErr	Control error more than 50mA for more than 200ms.	25	1 bit	2 states/1 bit 0 offset	0 to 1	00 = No Error 01 = Error	Valve disconnected Faulty valve cable Check valve connection Check valve cable
FwdH_hwErr	Over-current event (current higher than a threshold value) on the PWM outputs driving the valve. Over current events are mostly caused by short-circuits to ground. The hardware mechanism is driven by the power supply: the loss of power supply gives the same behavior of over-current event.	26	1 bit	2 states/1 bit 0 offset	0 to 1	00 = No Error 01 = Error	Short circuit to ground. Power supply undervoltage. Check valve cable for short-circuit to ground. Check power supply line. Replace the TCU.
FwdL_ctrlErr	Control error more than 50mA for more than 200ms.	27	1 bit	2 states/1 bit 0 offset	0 to 1	00 = No Error 01 = Error	Valve disconnected Faulty valve cable Check valve connection Check valve cable
FwdL_hwErr	Over-current event (current higher than a threshold value) on the PWM outputs driving the valve. Over current events are mostly caused by short-circuits to ground. The hardware mechanism is driven by the power supply: the loss of power supply gives the same behavior of over-current event.	28	1 bit	2 states/1 bit 0 offset	0 to 1	00 = No Error 01 = Error	Short circuit to ground. Power supply undervoltage. Check valve cable for short-circuit to ground. Check power supply line. Replace the TCU.
FwdL_hwErr	Control error more than 50mA for more than 200ms.	29	1 bit	2 states/1 bit 0 offset	0 to 1	00 = No Error 01 = Error	Valve disconnected Faulty valve cable Check valve connection Check valve cable
Rev_ctrlErr	Over-current event (current higher than a threshold value) on the PWM outputs driving the valve. Over current events are mostly caused by short-circuits to ground. The hardware mechanism is driven by the power supply: the loss of power supply gives the same behavior of over-current event.	30	1 bit	2 states/1 bit 0 offset	0 to 1	00 = No Error 01 = Error	Short circuit to ground. Power supply undervoltage. Check valve cable for short-circuit to ground. Check power supply line. Replace the TCU.

Kprop_ctrlErr	Control error more than 50mA for more than 200ms.	31	1 bit	2 states/1 bit 0 offset	0 to 1	00 = No Error 01 = Error	Valve disconnected Faulty valve cable Check valve connection Check valve cable
KpropStuckOpen	Engine running, Kprop valve NOT energized and line pressure presence	32	1 bit	2 states/1 bit 0 offset	0 to 1	00 = No Error 01 = Error	Faulty Kprop valve Kprop valve shorted to power supply Check Kprop valve cable. Change Kprop valve.
Kprop_hwErr	Over-current event (current higher than a threshold value) on the PWM outputs driving the valve. Over current events are mostly caused by short-circuits to ground. The hardware mechanism is driven by the power supply: the loss of power supply gives the same behavior of over-current event.	33	1 bit	2 states/1 bit 0 offset	0 to 1	00 = No Error 01 = Error	Short circuit to ground. Power supply undervoltage. Check valve cable for short-circuit to ground. Check power supply line. Replace the TCU.
NeutralFail	Driveline not disengaged at Neutral selection. Driveline is considered not disengaged if after init with engine running and system pressure presence: engine speed – input shaft speed> Threshold (engine speed) AND | SpdTxIn – SpdTxOut* PreviousEngagedGearRatio | <50rpm Threshold is function of engine speed: Engine speed-> Threshold 1000rpm-> 400rpm 1500-> 200 rpm 2000-> 120rpm 2500-> 120rpm Detection time is 200ms. Diagnostic does not work when SafeNeutral is applied.	34	1 bit	2 states/1 bit 0 offset	0 to 1	00 = No Error 01 = Error	Hydraulic problem Electric problem Mechanic problem Check driveline system
EEC1tmout_err	EEC1 CAN message not received for more then: 20s before system init 200ms after system init	35	1 bit	2 states/1 bit 0 offset	0 to 1	00 = No Error 01 = Error	Problem on Engine Controller ecu Problem on CAN network Check Engine Controller ecu Check CAN network

BJM1tmout_err	BJM1 CAN message not received for more then: 20s before system init 200ms after system init	36	1 bit	2 states/1 bit 0 offset	0 to 1	00 = No Error 01 = Error	Problem on JOY-STICK CAN Problem on CAN network Check Engine Controller ecu Check CAN network
TCUHW_err	(Reserved for future use)	37	1 bit	2 states/1 bit 0 offset	0 to 1	00 = No Error 01 = Error	
IDigK1_err	The hardware detects an over current event (current higher than a threshold value) on digital output driving the digital Sk1 valve. Over current events are mostly caused by short-circuits to ground. The hardware is shared between the two outputs, so you can't tell which output is not working. The hardware mechanism is driven by the power supply: the loss of power supply gives the same behavior of over-current event.	38	1 bit	2 states/1 bit 0 offset	0 to 1	00 = No Error 01 = Error	Short circuit to ground. Power supply undervoltage. Check for short-circuit to ground. Check power supply line. Replace the TCU.
IDigK2_err	The hardware detects an over current event (current higher than a threshold value) on digital output driving the digital Sk2 valve. Over current events are mostly caused by short-circuits to ground. The hardware is shared between the two outputs, so you can't tell which output is not working. The hardware mechanism is driven by the power supply: the loss of power supply gives the same behavior of over-current event.	39	1 bit	2 states/1 bit 0 offset	0 to 1	00 = No Error 01 = Error	Short circuit to ground. Power supply undervoltage. Check for short-circuit to ground. Check power supply line. Replace the TCU.
RstabLiftSts	Rear stabilizer lifted status	35	1 bit	2 values, 1 bit	0 to 1	0x00 = false 0x01 = true	
LstabLiftSts	Left stabilizer lifted status	36	1 bit	2 values, 1 bit	0 to 1	0x00 = false 0x01 = true	

Signal	Content	Start bit	Length	Scale	Range	Values
GearSelCurrent	Value in current (mA)	0	16 bit	Factor: 0.001 Offset: 0	0 to 65535	
GearSel	Gear Selection value	16	8 bit	Factor: 1 Offset 0	0 to 255	1 to 6
GearSelCode	Gear Selection code	24	8 bit	Factor: 1 Offset 0	0 to 255	
AutoMode	Automatic mode selection	32	1 bit	2 values, 1 bit	0 to 1	0x00 = Manual mode 0x01 = Auto mode
GearSelPin53b	Pin 53b status	33	1 bit	2 values, 1 bit	0 to 1	0x00 = false 0x01 = true
GearSelPin53	Pin 53 status	34	1 bit	2 values, 1 bit	0 to 1	0x00 = false 0x01 = true

ParkBrakeRls	Park brake released status	37	1 bit	2 values, 1 bit	0 to 1	0x00 = false 0x01 = true
JstkGearSelEnbl	Gear selection with joystick enabled	38	1 bit	2 values, 1 bit	0 to 1	0x00 = false 0x01 = true
JstkGearSelActive	Gear selection with joystick enabled and active	39	1 bit	2 values, 1 bit	0 to 1	0x00 = false 0x01 = true
GearSelFlt	Gear selection filter	40	1 bit	2 values, 1 bit	0 to 1	0x00 = false 0x01 = true
MoveReady	All conditions are OK for gear engagement to be done if gear selection is requested	41	1 bit	2 values, 1 bit	0 to 1	0x00 = false 0x01 = true
DriverOnSeat	Seat status	42	1 bit	2 values, 1 bit	0 to 1	0x00 = false 0x01 = true
GearSelG1	G1 digital status	43	1 bit	2 values, 1 bit	0 to 1	0x00 = false 0x01 = true
GearSelG2	G2 digital status	44	1 bit	2 values, 1 bit	0 to 1	0x00 = false 0x01 = true
GearSelG3	G3 digital status	45	1 bit	2 values, 1 bit	0 to 1	0x00 = false 0x01 = true
GearSelG4	G4 digital status	46	1 bit	2 values, 1 bit	0 to 1	0x00 = false 0x01 = true

9.5.Air Conditioner Troubleshooting

Fault Code	Under Voltage	Over Voltage	Pressure Switch	In Temp Short Circuit	In Temp Open Circuit	Detrost Sensor	Code Instruction (Detection and Elimination)
E1	#						Under voltage (voltage ≤ 9±1 VDC): check generator supply circuit.
E2		#					Over voltage (voltage ≥ 16±1V DC): check generator supply circuit.
E4			#				Pressure fault: check pressure switch circuit and system pressure.
E8						#	Defrost sensor open or short circuit. Detect sensor return circuit.
H				#			Internal temp. sensor short circuit detect sensor circuit.
L					#		In temperature sensor open circuit detect sensor circuit.

Remark: 1 "#": Faultoccurs in this point.

Remark: 2 Voltage and pressure errors ocur with error code and warning tone. Other errors ocur with error code but no warning tone.

10.REMOVAL AND INSTALLATION

10.1.Wheels

WARNING

DO NOT service the machine without following all safety precautions as outlined in the Section — Safety Principle, of this manual.

Removing Wheel and Tire Assembly from Machine

1. Park the machine on firm, level ground, level the machine, fully retract the boom, lower the boom, shift the transmission (N) to NEUTRAL, set the parking brake and turn the engine OFF.
2. For warning purposes during service, place the Do Not Start Label on both the ignition key switch and the steering wheel.
3. Loosen but Do Not remove the lug nuts on the wheel and tire assembly to be removed.
4. Place a suitable jack under axle pad closest to wheel being removed. Raise machine and position a suitable support beneath axle. Allow sufficient room to lower machine onto support and to remove wheel and tire assembly.
5. Lower machine onto support.
6. Remove lug nuts and washers in alternating pattern.
7. Remove wheel and tire assembly from machine.

Installing Wheel and Tire Assembly onto Machine

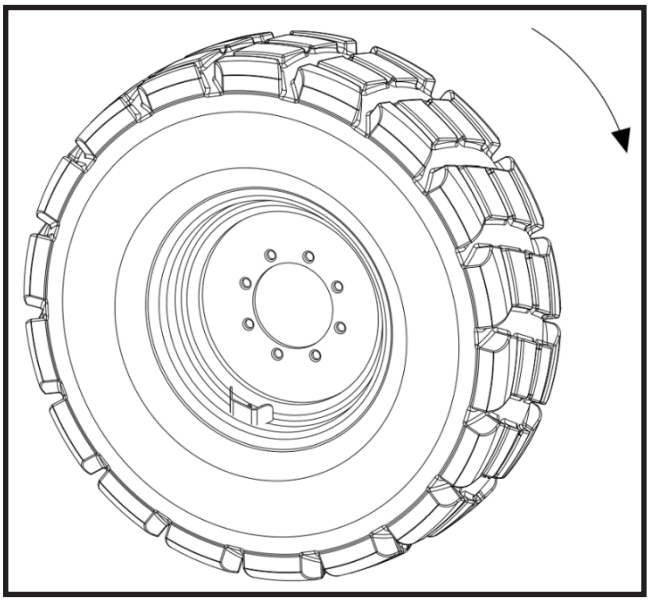

Note: The wheel and tire assemblies must be installed with directional tread pattern “arrows” facing in direction of forward travel.

Note: Verify valve stems face outward on all wheel and tire assemblies.

1. Position wheel onto studs on wheel end of axle.
2. Start all lug nuts by hand to prevent cross threading. Apply one drop of lubrication oil.

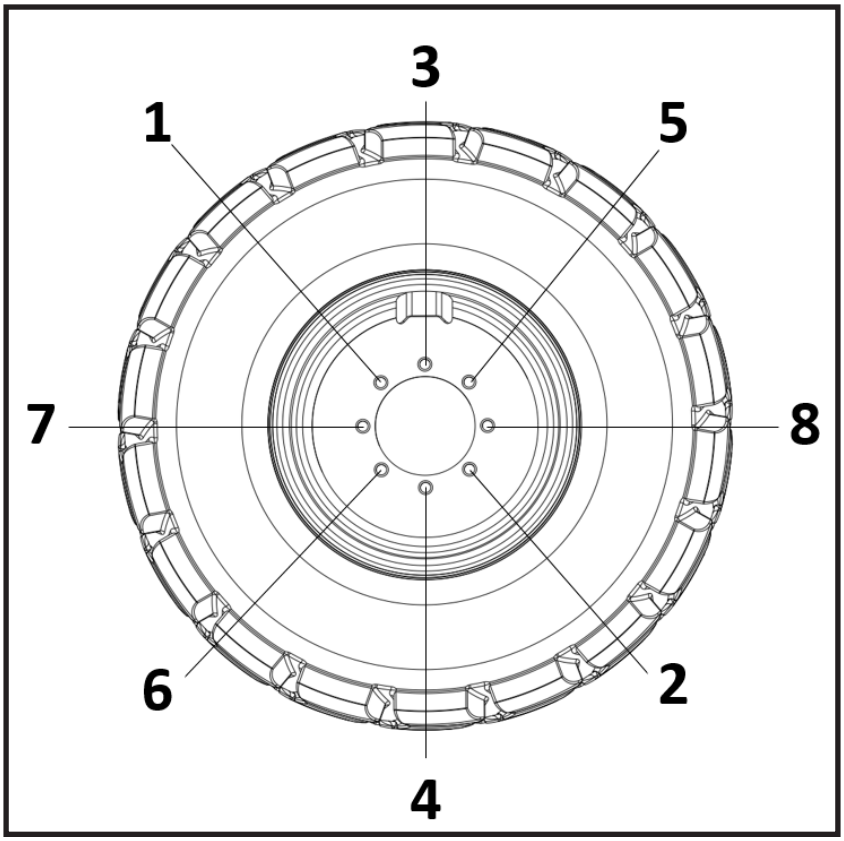

3. Tighten lug nuts in an alternating pattern as indicated above.
4. Remove machine from supports.
5. Remove Do Not Operate Tag from ignition key switch and steering wheel.

10.2.Drive Shaft Assembly

Axle, Drive Shaft and Wheel Component Terminology

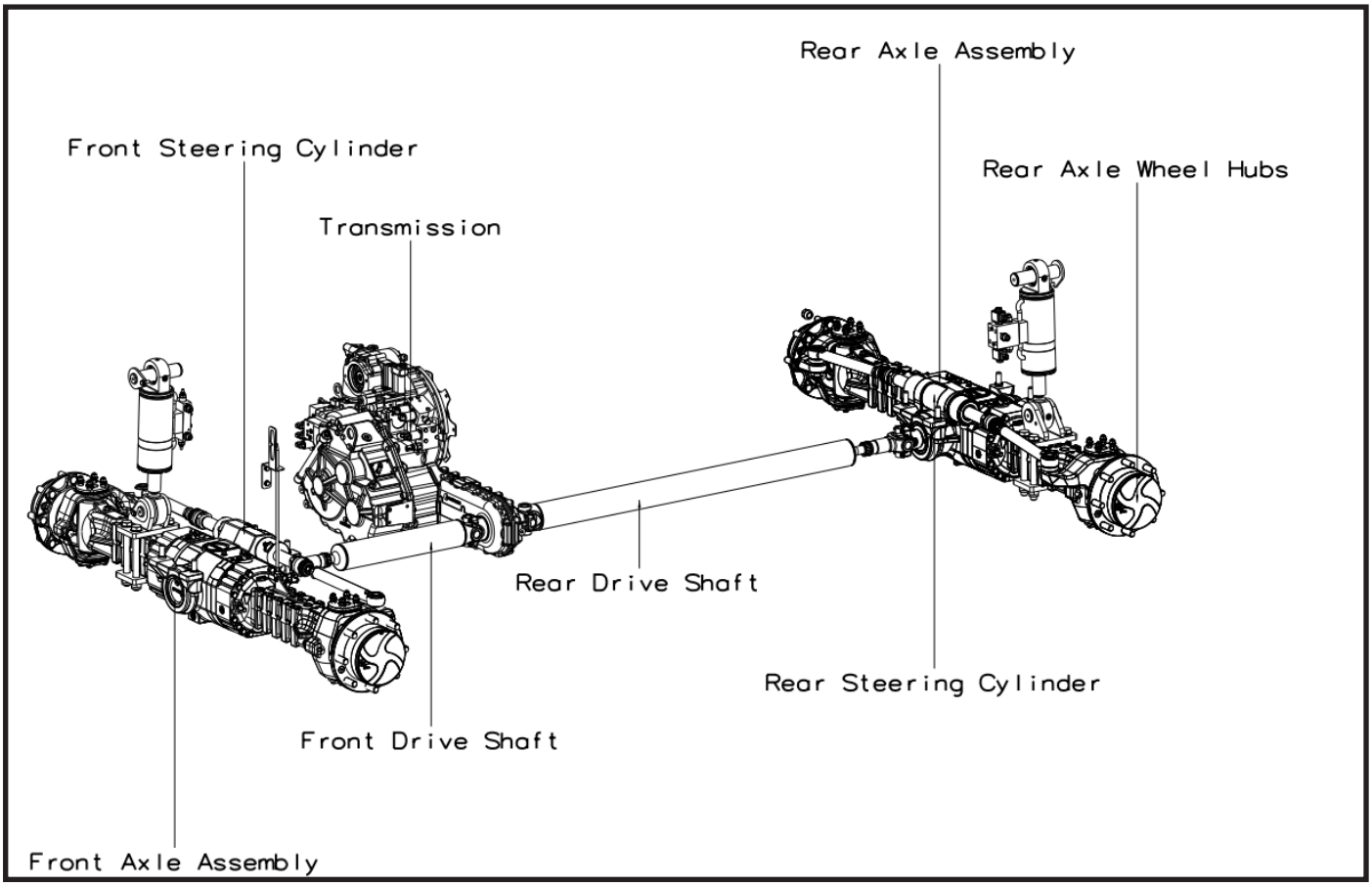

To understand the safety, operating and maintenance information presented in this section, the operator/ technician must know the names and locations of axles, drive shafts, wheels and tires. The following illustration identifies the components referenced throughout this section.

WARNING!

DO NOT service the machine without following all safety precautions as outlined in the Section — Safety Principle, of this manual.

Axle Serial Number

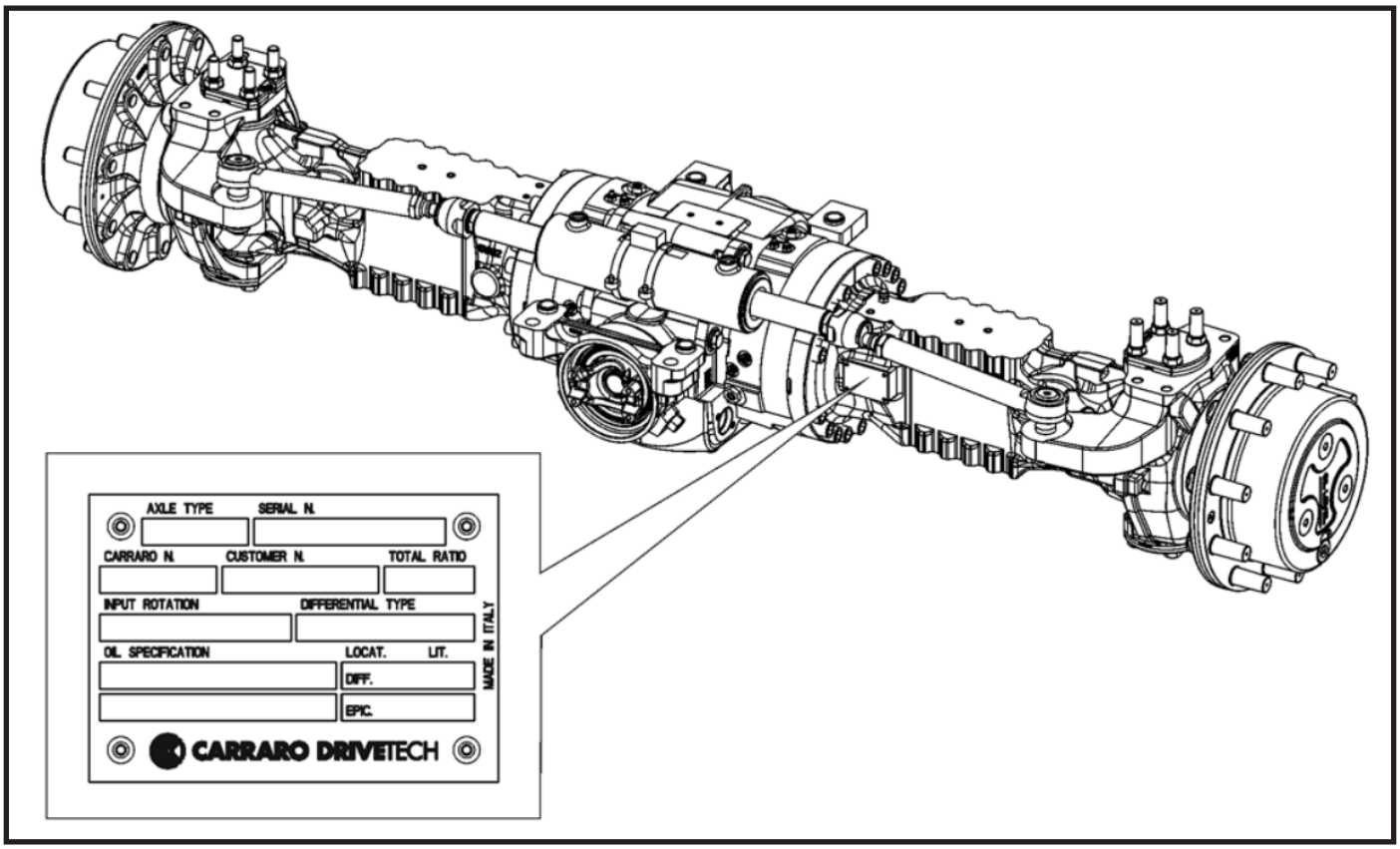

Axle Replacement

NOTE: The axles used in TH-842 and TH-944 models are common.

The axles used in TH-1044, TH-1056 and TH-1256 models are different.

All axles have the same removal and installation information.

Axle Removal

WARNING!

An improperly supported machine can fall. Safely raise and adequately support the machine so that it will remain stable and in place before attempting to remove an axle.

1. Park the machine on firm, level ground, level the machine, fully retract the boom, lower the boom, shift the transmission (N) to NEUTRAL, set the parking brake and turn the engine OFF.
2. For warning purposes during service, place the Do Not Start Label on both the ignition key switch and the steering wheel.
3. Open the engine cover before starting the process. Allow system fluids to cool.
4. Properly disconnect battery(s). *Refer to Section — Battery*, for procedure.
5. Remove the fender assembly (**1**) by removing the bolts (**2**) securing it to the axle.

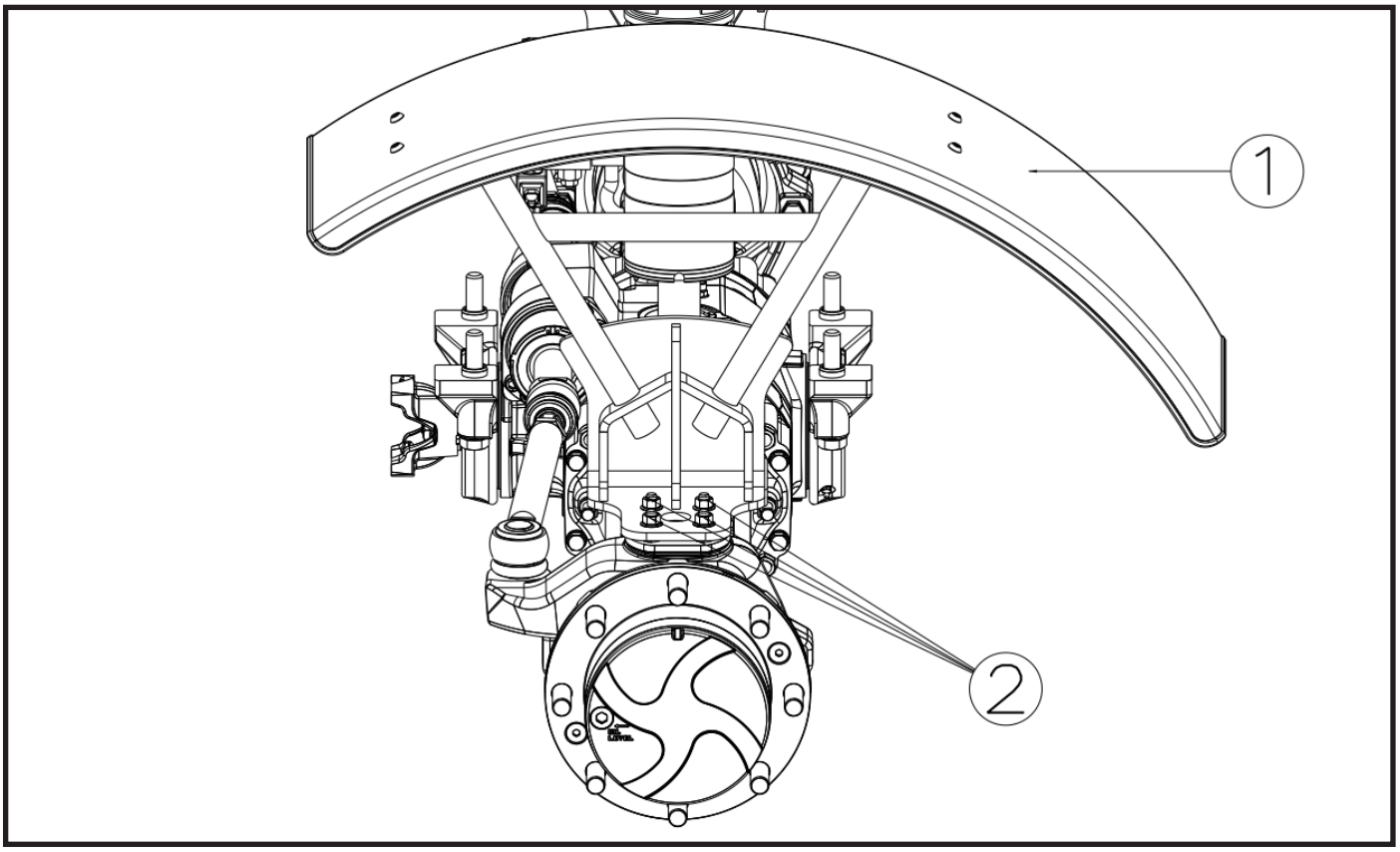

6. Loosen and remove the axle oil fill plug (**5**) and check fill plugs (**6**).
7. If axle will be disassembled after removal, place a suitable receptacle under axle (**3**) and wheel hub drain plugs (**4**). Remove drain plugs and allow oil to drain into receptacle. *Refer to Section Axle Assembly* for detail instructions.

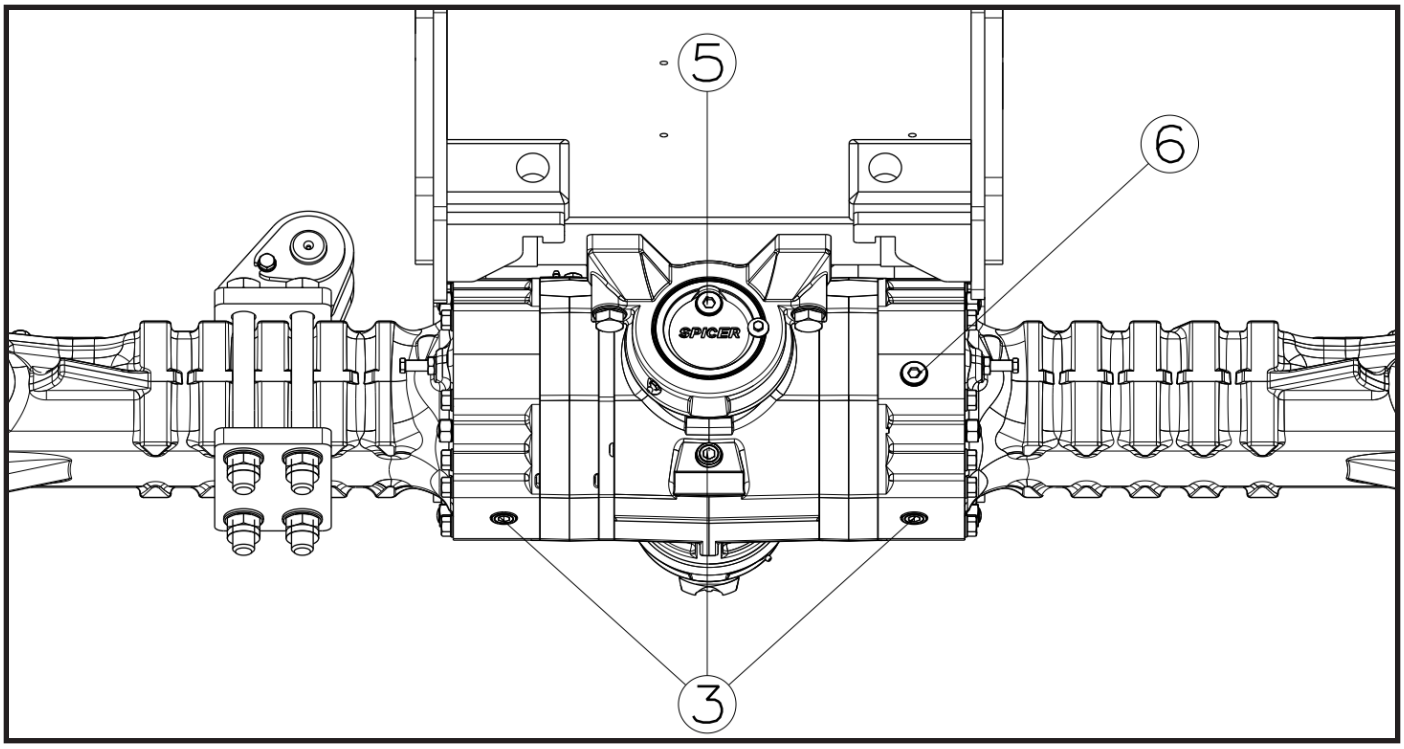

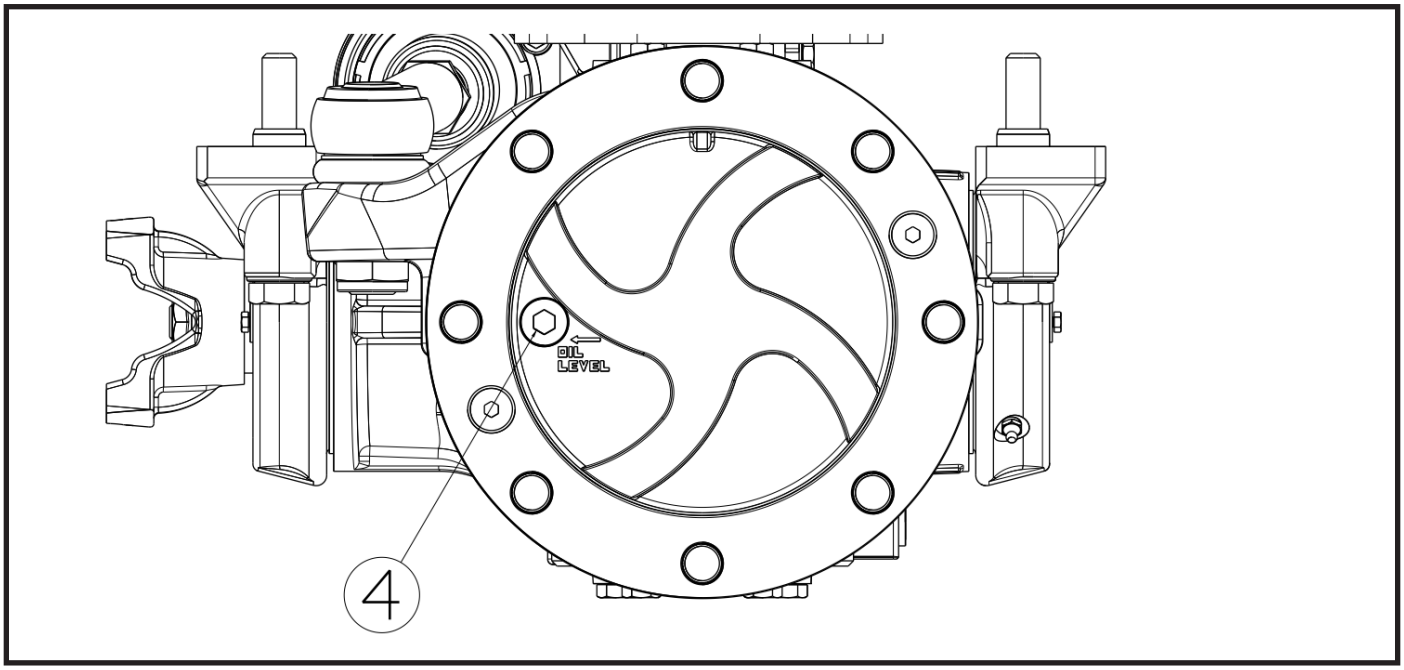

8. Disconnect and cap steering and brake lines at axle.
9. Block front and rear of both tires on axle that is not being removed. Ensure that machine will remain in place during axle removal before proceeding.
10. Raise machine using a suitable jack or hoist. Ensure that machine will remain in place during axle removal.
11. Support axle that is being removed with a suitable jack, hoist or overhead crane and sling. DO NOT raise axle or machine.
12. Remove both the wheel and the tire assemblies from the axle that is being removed. *Refer to Section — Removing Wheel and Tire Assembly from Machine*,
13. Remove the oscillating cylinder (**7**).

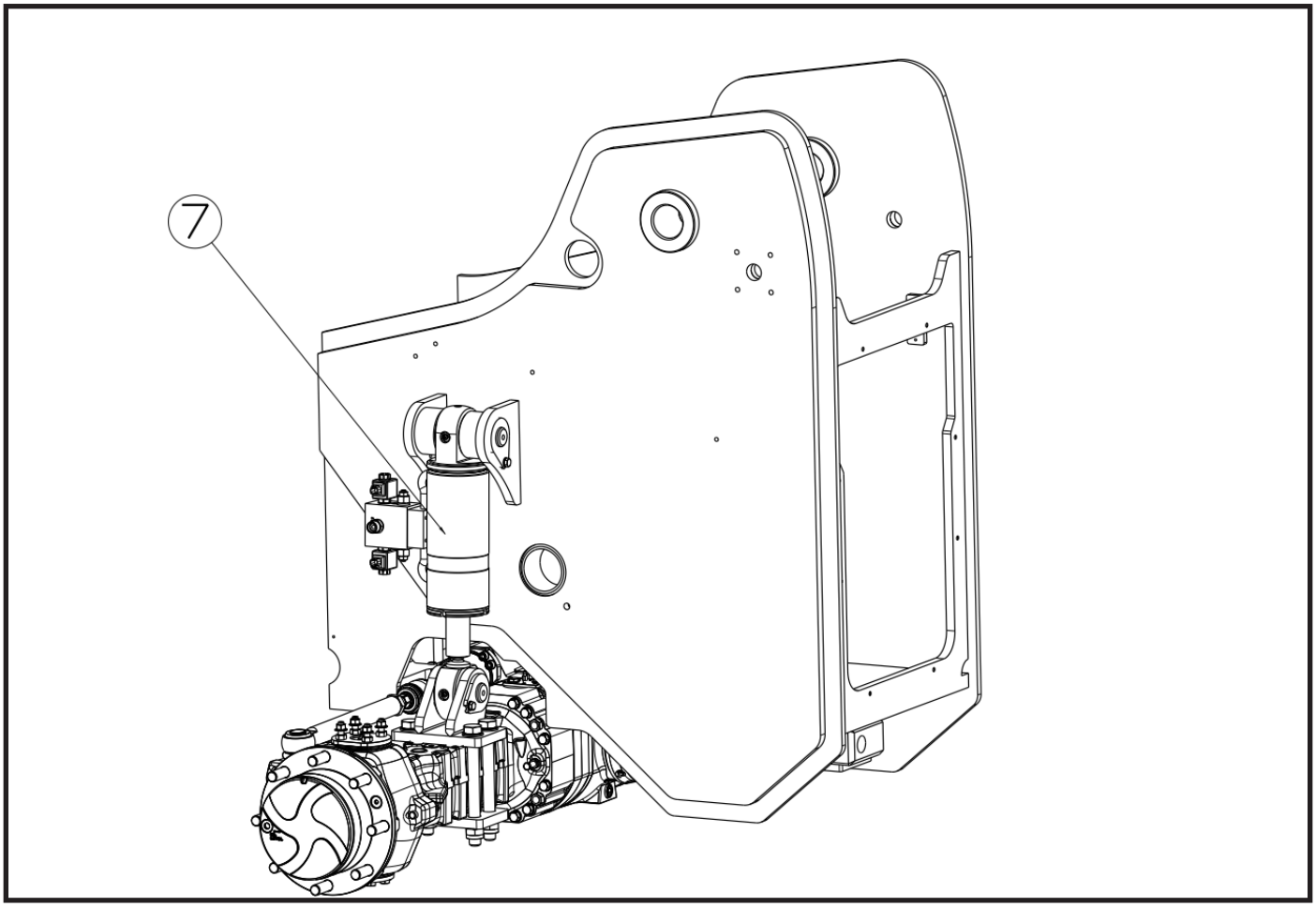

14. Remove the drive shaft assembly. *Refer to Section — Drive Shafts*.
15. Remove the bolts (**8**) connected to the chassis.

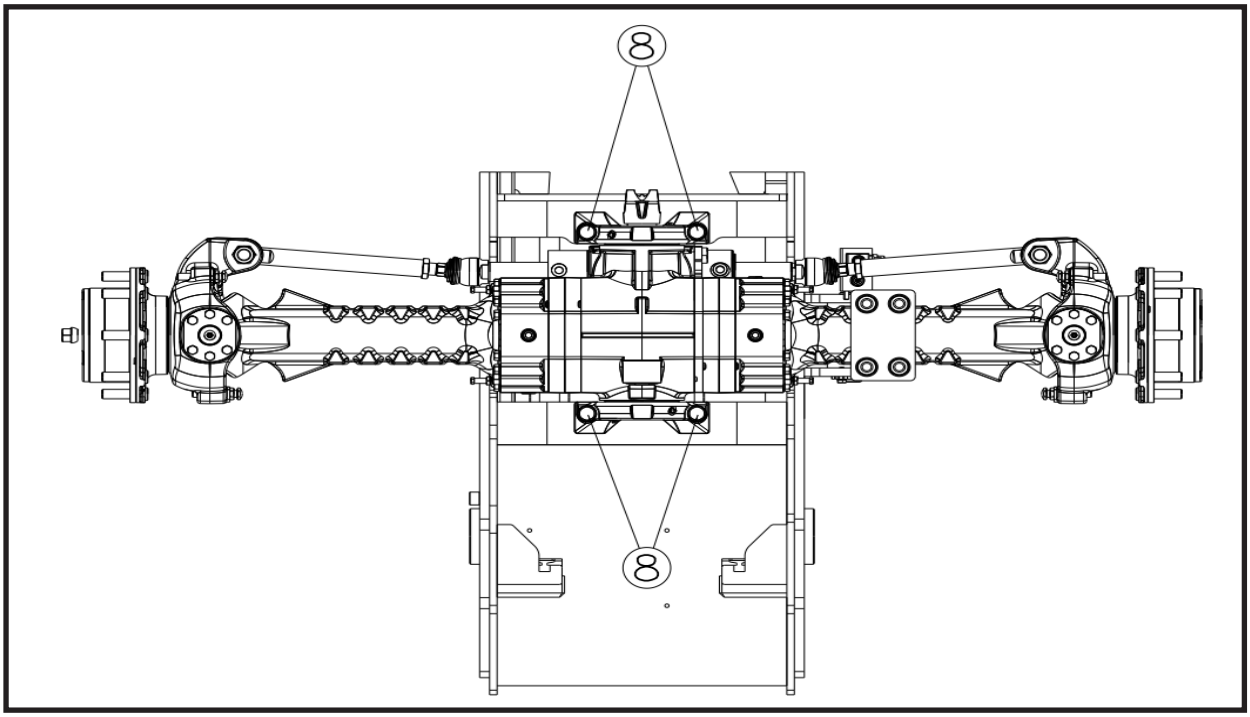

16. Remove the axle from the machine using a jack, crane and the suspension support axle. DO NOT lift or otherwise disturb the machine while removing the axle. Stabilize the axle and prevent it from tipping, turning or falling when removing it from under the machine. Place the axle on a suitable support or holding stand.

Axle Installation

1. If applicable, raise machine using a suitable jack or hoist. Place suitable supports beneath the frame and lower the machine onto the supports, allowing enough room for axle installation.
2. Before proceeding, ensure machine will remain in place during axle installation.
3. Block front and rear of both tires on axle that is already installed on machine.
4. Using a suitable jack, hoist or overhead crane and sling, remove axle from its support or holding stand. Balance axle and prevent it from tipping, turning or falling while positioning it beneath machine. DO NOT raise or otherwise disturb machine while installing the axle.
5. Keep axle supported and balanced on the jack, hoist or overhead crane and sling throughout the installation procedure.
6. Position axle under frame, and align axle housings with holes in frame.
7. *Refer to Section — Definitions*, for all thread locking requirements.
8. Install axle mounting bolts and nuts. Tighten and torque as required.
9. Install the drive shaft assemblies. *Refer to Section — Drive Shafts*.
10. Tighten axle oil drain plugs (**1**). Fill until oil level reaches bottom of check fill plug. *Refer to Section — Fluid and Lubricant Capacities*, for proper oil and capacities.

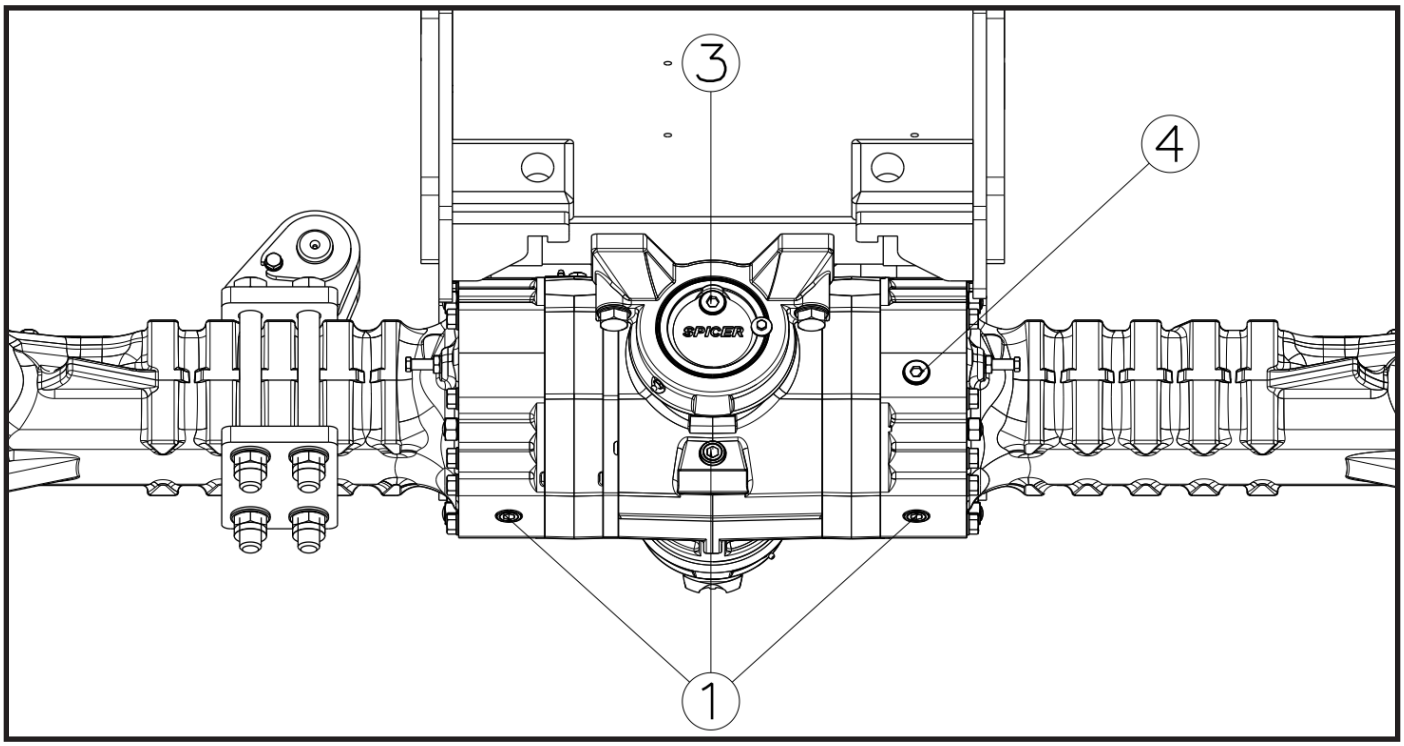

11. Rotate wheel hubs 90 degrees so wheel hub drain plug becomes the fill plug (**2**). *Refer to Section — Fluid and Lubricant Capacities*, for proper oil and capacities.

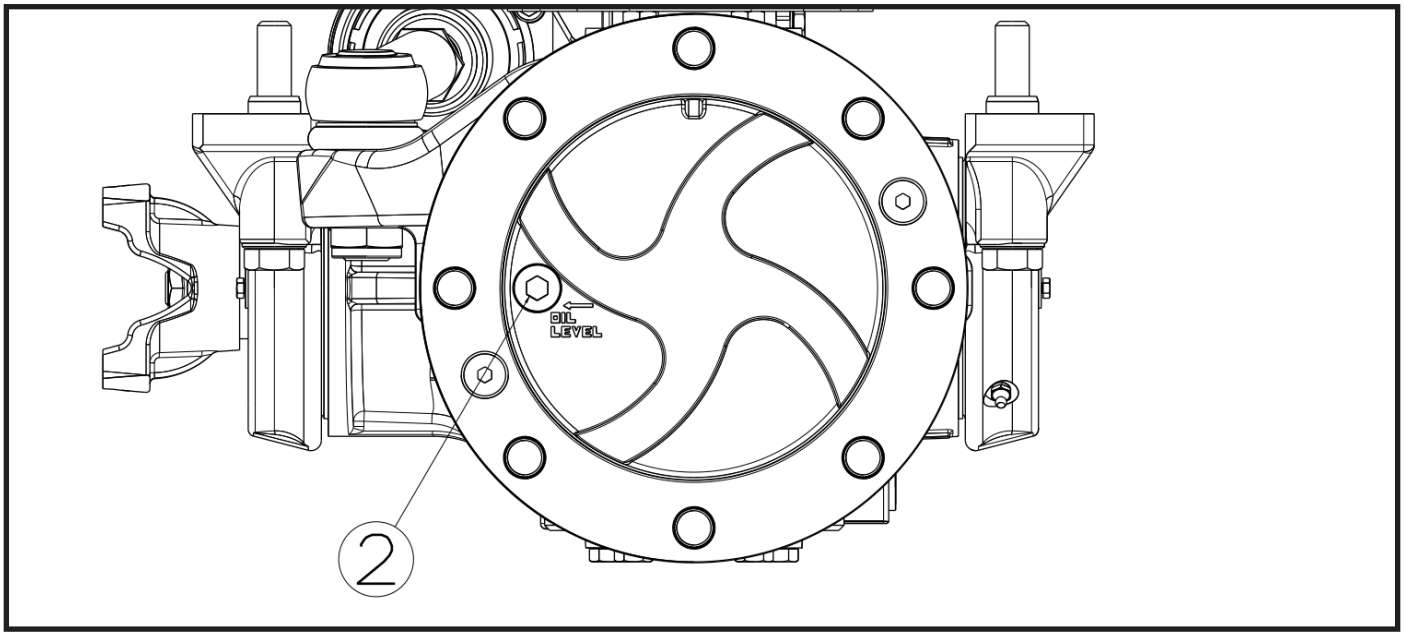

12. Install and tighten the axle oil fill plug (**3**) and check fill plugs (**4**).
13. Install the wheel and tire assemblies. *Refer to Section — Installing Wheel and Tire Assembly onto Machine*,
14. Install new O-rings into fittings.
15. Install new O-rings into fittings.
16. Uncap and connect steering and brake lines at their axle fittings.
17. Check hydraulic oil level.
18. Start engine.
19. Check for hydraulic leaks, and tighten or repair as necessary.
20. Install fender assembly. Torque as required.
21. Properly connect the battery. *Refer to Section — Battery*.
22. Close and secure engine cover.
23. Remove Do Not Operate Tag from ignition key switch and steering wheel.

Drive Shafts

Removal

1. Park machine on a firm, level surface, level machine, fully retract boom, lower boom, place transmission control lever in (N) NEUTRAL, engage park brake and shut engine OFF.
2. Place a Do Not Operate Tag on both the ignition key switch and steering wheel.
3. Open engine cover. Allow the system fluids to cool.
4. Properly disconnect the battery. *Refer to Section — Battery*.
5. Block the wheels.

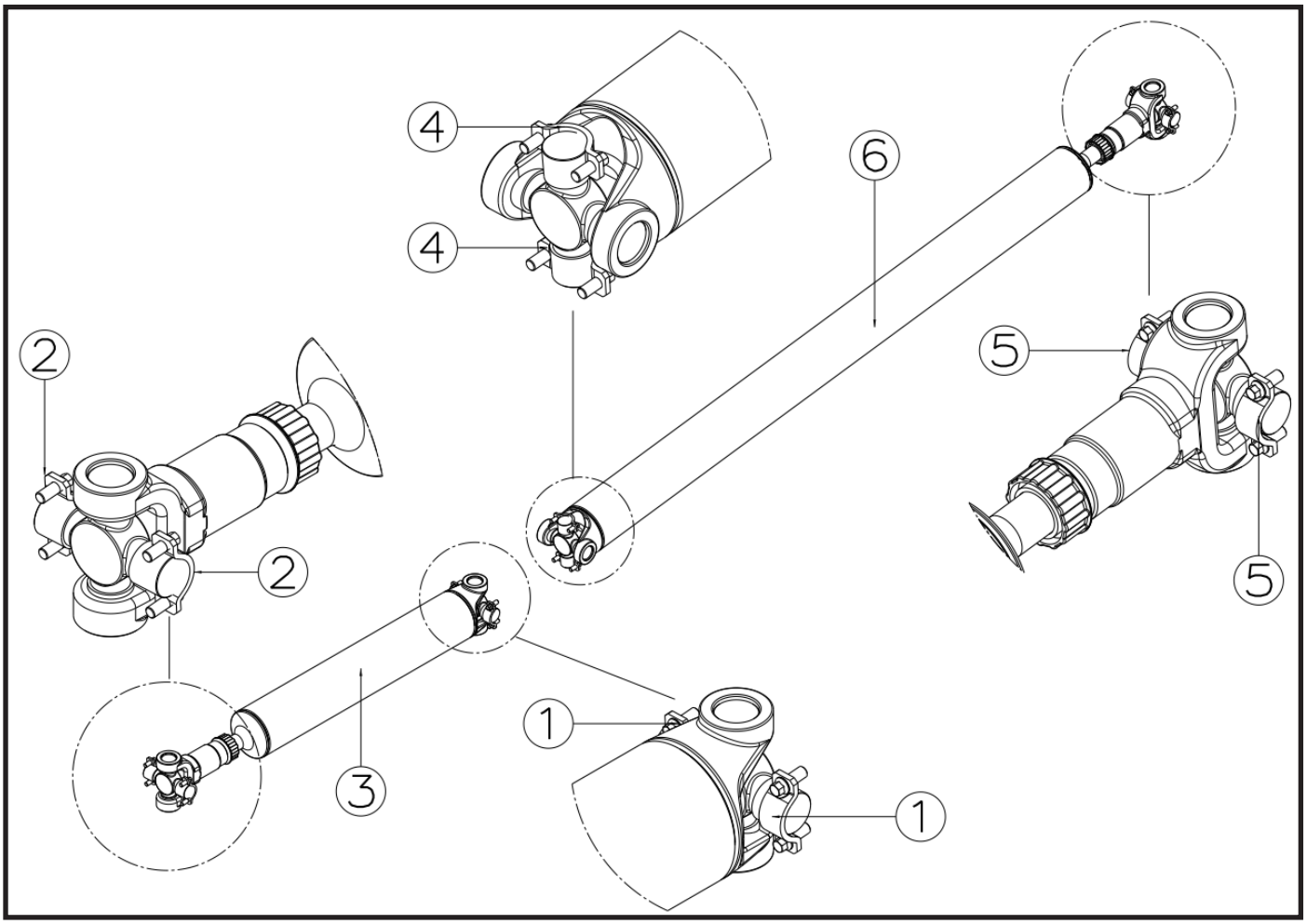

6. Remove four bolts and two straps (**1**) securing bearing cross to the transmission output shaft flange. Discard bolts.
7. Remove four bolts and two straps (**2**) securing bearing crosses to the axle. Discard bolts.
8. Remove front drive shaft assembly (**3**).
9. Remove four bolts and two straps (**4**) securing bearing cross to transmission output shaft flange. Discard bolts.
10. Remove four bolts and two straps (**5**) securing bearing cross to rear axle. Discard bolts.
11. Remove rear drive shaft assembly (**6**).

Installation

1. Refer to Section — Definitions, for all thread locking requirements.
2. Install two straps and four new bolts (**1**) securing bearing crosses to transmission.
3. Install two straps and four new bolts (**2**) securing bearing crosses to axle.
4. Install front drive shaft assembly (**3**).
5. Install two straps and four new bolts (**4**) securing bearing crosses to the transmission.
6. Install two straps and four new bolts (**5**) securing bearing crosses to axle.
7. Install rear drive shaft assembly (**6**).
8. Properly connect the battery. *Refer to Section — Battery*, for procedure.
9. Close and secure the engine cover.
10. Unblock the wheels.
11. Remove Do Not Operate Tags from both ignition key switch and steering wheel.

10.3.Engine

WARNING!

DO NOT service the machine without following all safety precautions as outlined in Section — Safety Principle, of this manual.

WARNING!

Engine fuel lines are pressurized. DO NOT attempt repairs unless specific training has been completed.

Engine Component Terminology

To understand the safety, operating and maintenance information presented in this section, the operator/ technician must know the names and locations of engine components. The following illustration identifies the components referenced throughout this section.

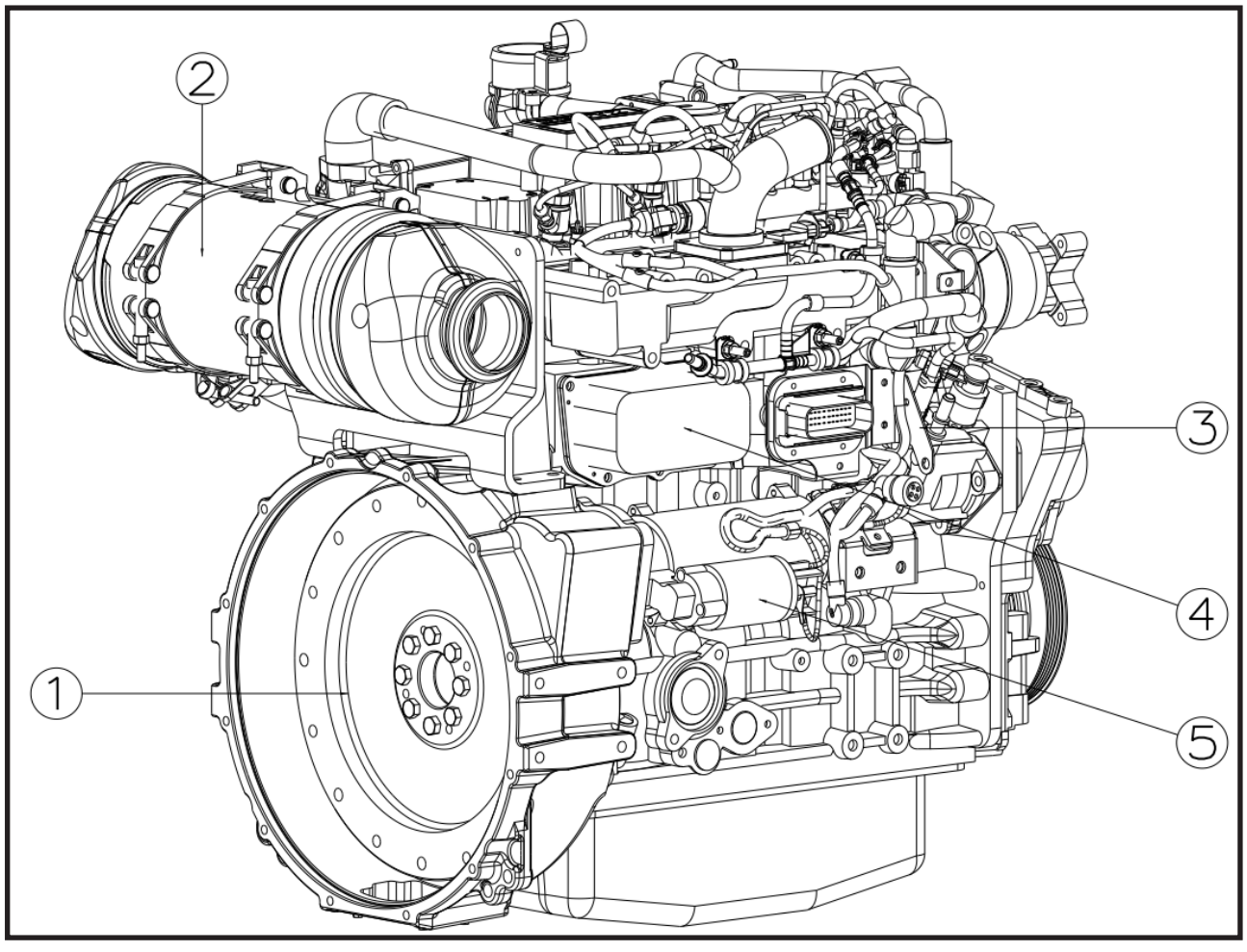

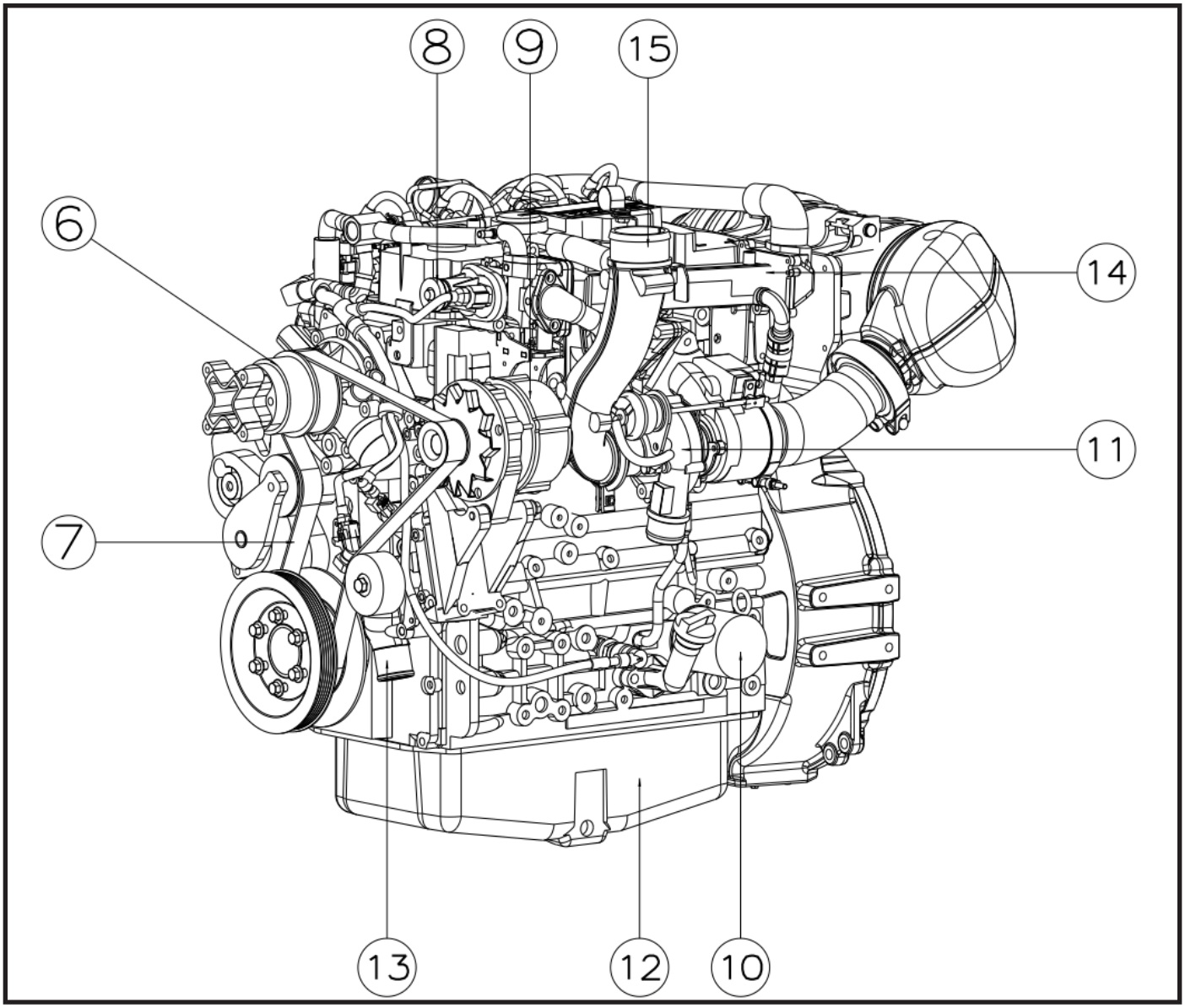

1	Flywheel	**9**	Alternator
2	SCR Catalytic Converter	**10**	Oil Filter
3	Fixation of Wiring Harness	**11**	Turbocharger
4	Oil Cooler	**12**	Oil Pan
5	Starter	**13**	Fuel Injection Pump
6	Water Pump	**14**	EGR Cooler
7	Auxiliary Drive	**15**	Crank Case Breather
8	EGR Valve		

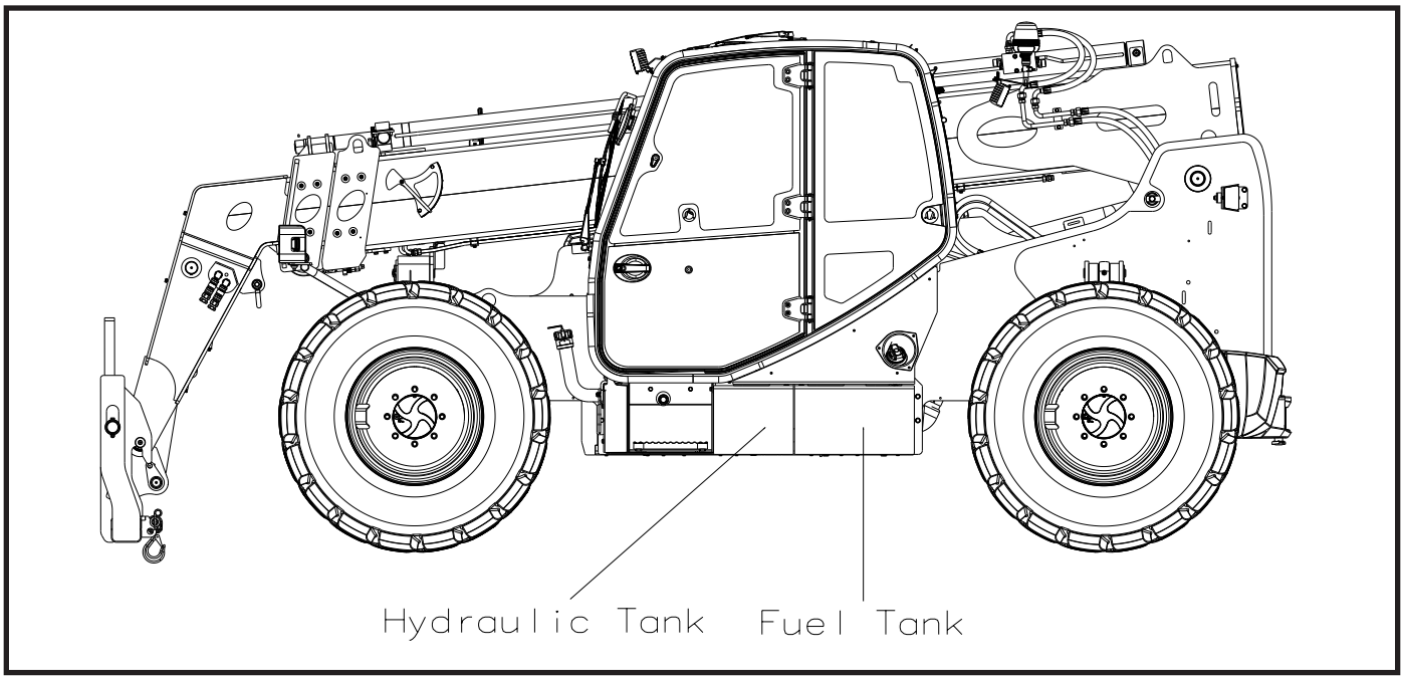
Hydraulic Tank
Fuel Tank

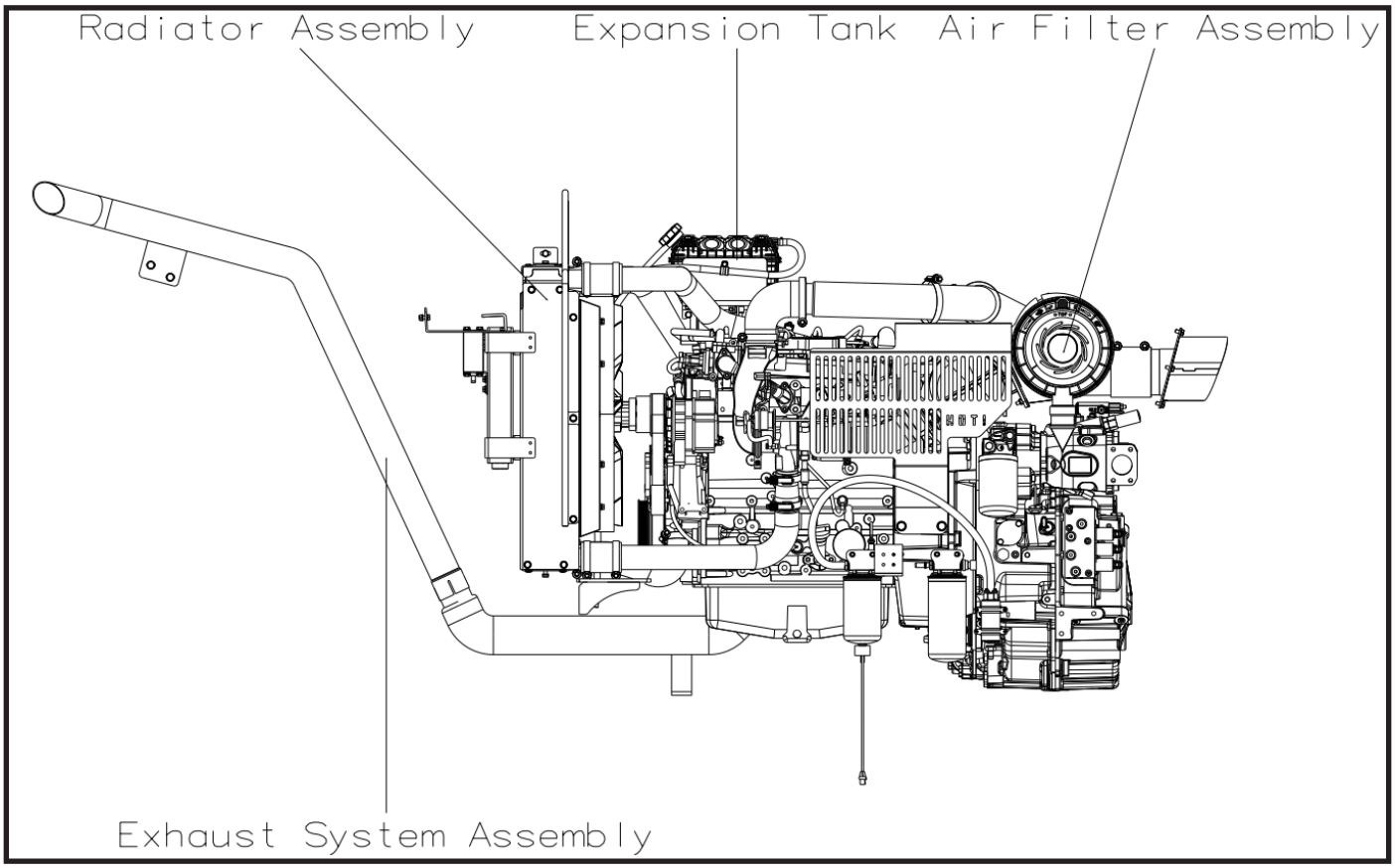
Radiator Assembly
Expansion Tank
Air Filter Assembly
Exhaust System Assembly

Engine Serial Number

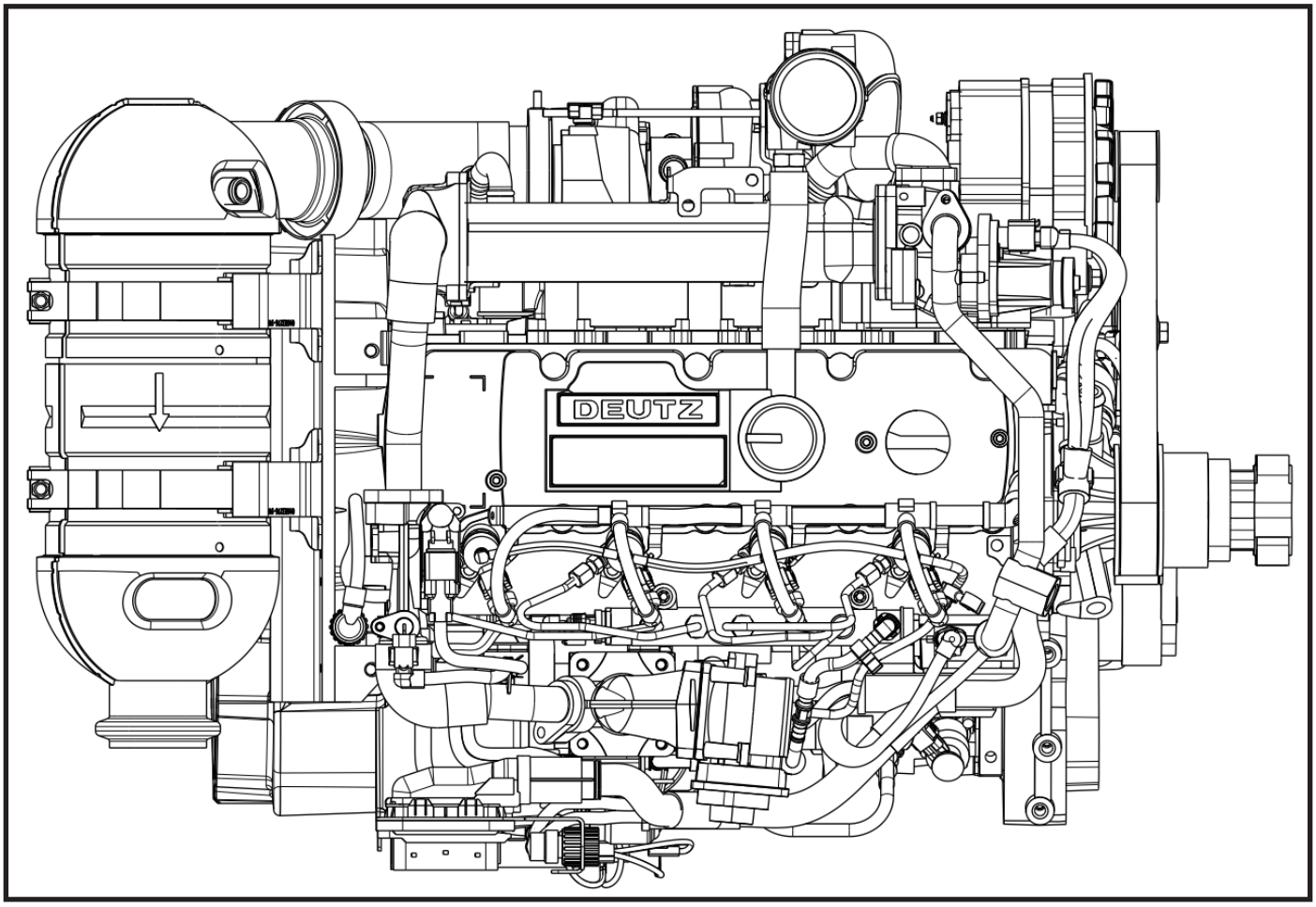

Specifications and Maintenance Information

For engine, coolant and oil specifications, and maintenance information, *Refer to Section —Specifications & General Information.*

Refer to Section — Engine Error Codes, for diagnostic codes and descriptions.

The engine is carried on four hydraulic mounts fitted to the engine compartment. Two front brackets and one rear bracket are bolted to the engine and are secured to the mounts from above. The engine compartment is bolted to the chassis at six side mounting points and at two rear points accessed from inside the chassis.

WARNING — The front and rear hydraulic mounts have different hardness ratings. Note the position of each mount before removal and fit each mount in its original position. Fitting a mount in the wrong position changes the vibration behaviour of the engine installation.

Component Weights (approximate)

Component	Weight	Note
Engine, Deutz TCD 3.6 L4	772 lb (350 kg)	All models
Transmission with torque converter	882 lb (400 kg)	All models
Engine and transmission unit	1,653 lb (750 kg)	Removed together
Engine compartment, complete	[TBD]	

WARNING — Use lifting equipment with a rated capacity of at least 1.5 times (150%) the weight of the component being lifted. Refer to the component weight table in this manual.

Fastener Torques

Joint	Fastener	Retainer	Torque
Rear engine bracket to engine	M16 x 50, class 10.9 (4)	—	184 ft-lb (250 Nm)
Front engine brackets to engine	M12 x 35, class 10.9 (6)	—	81 ft-lb (110 Nm)
Engine brackets to mounts	M12 x 30, class 10.9 (6)	—	81 ft-lb (110 Nm)
Mounts to compartment	M10 x 30, class 8.8 with nut (16)	—	33 ft-lb (45 Nm)
Compartment to chassis, side	M16 x 30, class 8.8 (6)	Loctite 270	148 ft-lb (200 Nm)
Compartment to chassis, rear	M12 x 45, class 8.8 (2)	—	55 ft-lb (75 Nm)

Engine Replacement

- **Removal**

1. Park the machine on firm, level ground, level the machine, fully retract the boom, lower the boom, shift the transmission (N) to NEUTRAL, set the parking brake and turn the engine OFF.
2. For warning purposes during service, place the Do Not Start Label on both the ignition key switch and the steering wheel.
3. Open the engine cover before starting the process. Allow system fluids to cool.
4. Properly disconnect battery(s). *Refer to Section — Battery*.
5. Remove the engine cover (**1**). Remove the front cover (**2**) and lower protection plates (**3**).

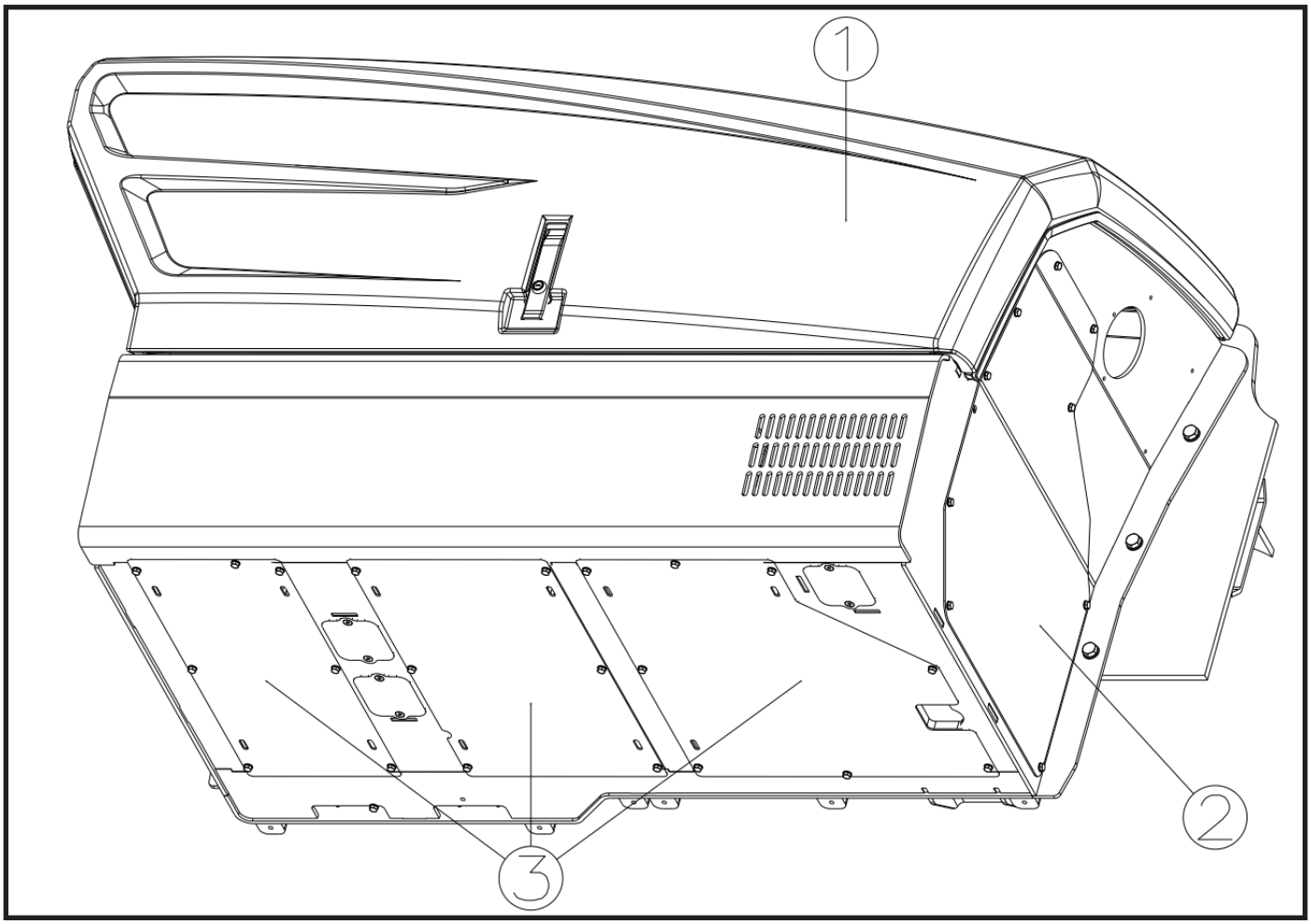

6. Properly Drain Hydraulic oil system. *Refer to Section — Hydraulic Tank Replacement*, for detailed instructions.
7. Properly drain Transmission. *Refer to Section — Transmission Replacement*, for detailed instructions.
8. Label, disconnect and cap/plug all hydraulic connections on the engine/transmission.
9. Disconnect all electrical wire connections on engine/transmission.
10. Remove Air Filter assembly. *Refer to Section — Air Filter Assembly*, for detailed instructions
11. Remove radiator assembly. *Refer to Section – Radiator Assembly Replacement*, for detailed instructions
12. Remove the heater hoses and DEF Tank cooling hoses, *Refer to Section – DEF Tank Replacement*, for detailed instructions.
13. Remove the fuel filters assembly. *Refer to Section – Fuel Filters Replacement*, for detailed instructions
14. Remove the Exhaust System. *Refer to Section – Engine Exhaust System*, for detailed instructions
15. Remove the engine hood strike plate.
16. Remove the service gate bolts.
17. Support the transmission from below.
18. Remove the engine mounts.
19. Remove the Engine/Transmission mounting bolts.
20. Hang the engine from the lifting points.
21. Remove the engine bracket with the engine hanging.
22. Bring the engine to ground level.

Installation

1. Install the engine mount lugs with the engine/transmission at ground level.
2. Attach lifting chain to the engine lifting areas and lift the engine/transmission above ground level.
3. *Refer to section – Definitions*, for allthread locking requirements.
4. Lift the engine/transmission and carefully lower it into the engine compartment. Place the engine/transmission brackets over the chassis mounts.
5. Install the mounting bolts, aligning the engine mounting holes.
6. Install the 4 engine mounts.
7. Remove the lifting chain.
8. Install the Air Filter. *Refer to Section – Air Filter Assembly*
9. Install the Exhaust System. *Refer to Section – Engine Exhaust System*
10. Install the Radiator Assembly. *Refer to Section – Radiator Assembly Replacement*
11. Install Drive Shaft Assembly. *Refer to Section – Drive Shaft Assembly*
12. Connect and secure all hydraulic hoses, fuel lines and electrical cable connections on the engine and transmission.
13. Fill the engine water.
14. Heater and cooling attach the mounts to the engine and tighten the clamps.
15. Properly connect battery(s). *Refer to Section — Battery,* for detailed instructions.
16. Check thet all connections to the hydraulic system, electrical system, cooling system, fuel system and exhaust system are correctly and tightly connected.
17. Check that the fluid levels are appropriate before starting. *Refer to Section Fluid and Lubricant Capacities*.
18. Start and run to normal operating temperature, then turn off the engine. Check for leaks while the engine cools down.
19. Allows the engine to cool down. Check the radiator coolant level. If necessary add coolant.
20. Check for leaks in the engine, main hydraulic pumps and lines, the engine, the hydraulic tank and the fuel tank. Check the levels of all fluids and lubricant. Refill as necessary.
21. Check if all components are working properly.
22. Turn the engine OFF.
23. Install the engine hood and lower engine protection plates.
24. Close and secure the engine cover.
25. Remove the Do Not Start label from the ignition switch and steering wheel.

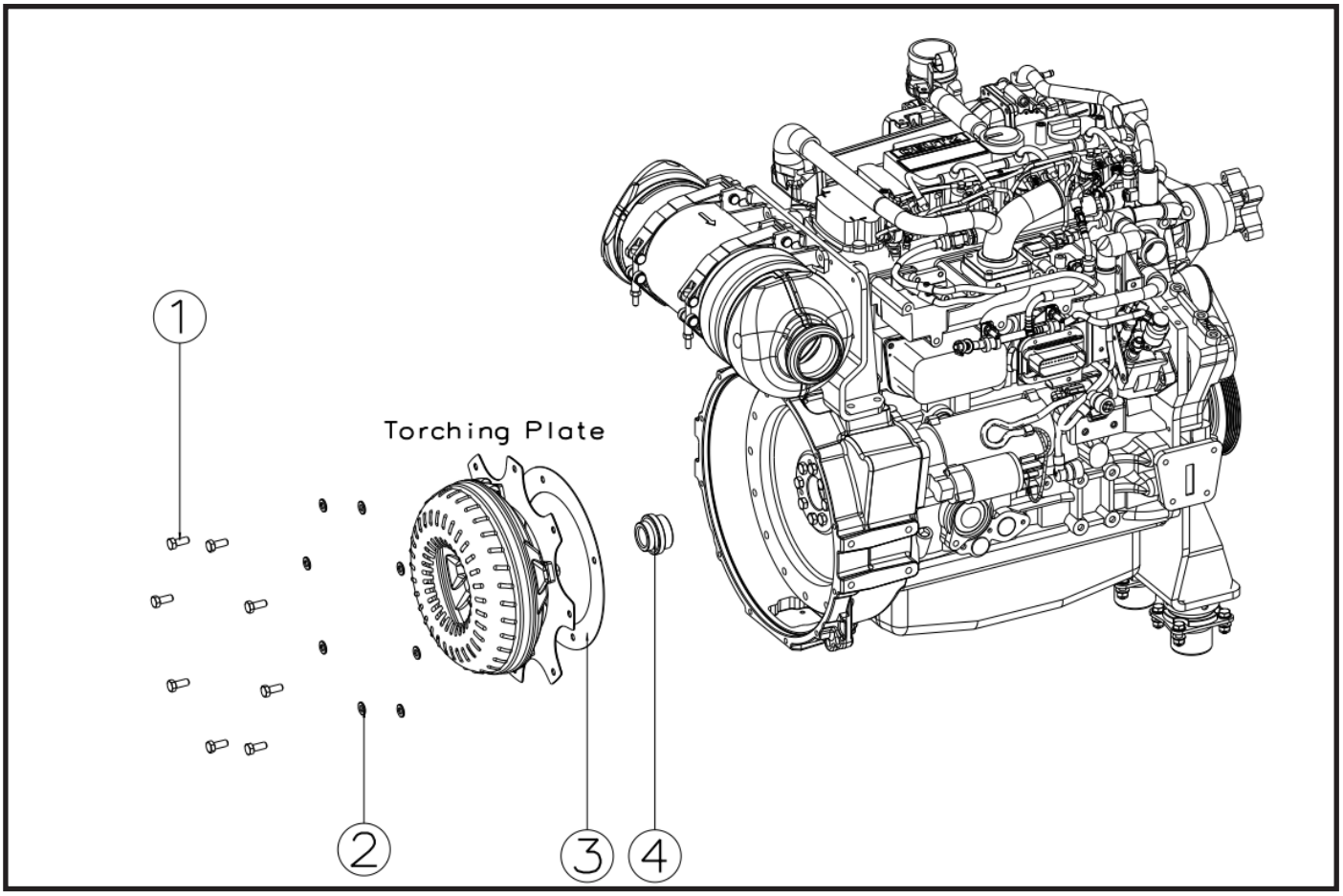

1. To drain the waste oil from the engine place on the mounting table, unscrew the bolt shown in Figure-A and drain the oil.

Figure-A

2. Install part (**4**) on the engine using plastic mallet as shown in the image.
3. Pull out the torching plate on the Gearbox.
4. Put Washers (**1**) on Bolts (**2**).
5. Then fit the Spacer Centering Flange (**3**) and the Torching Plate removed from the Gearbox over the previously installed Centering Flange Respectively (**4**).
6. Attached the prepared bolts to the top of the Torching Plate and tighten with 17 Torque Wrench.
7. Disconnect the Engine brain that comes on the Engine and spot it with a plastic clamp in a suitable place on the top of the Engine.

*** Put Loctite 270 on the bolts.**

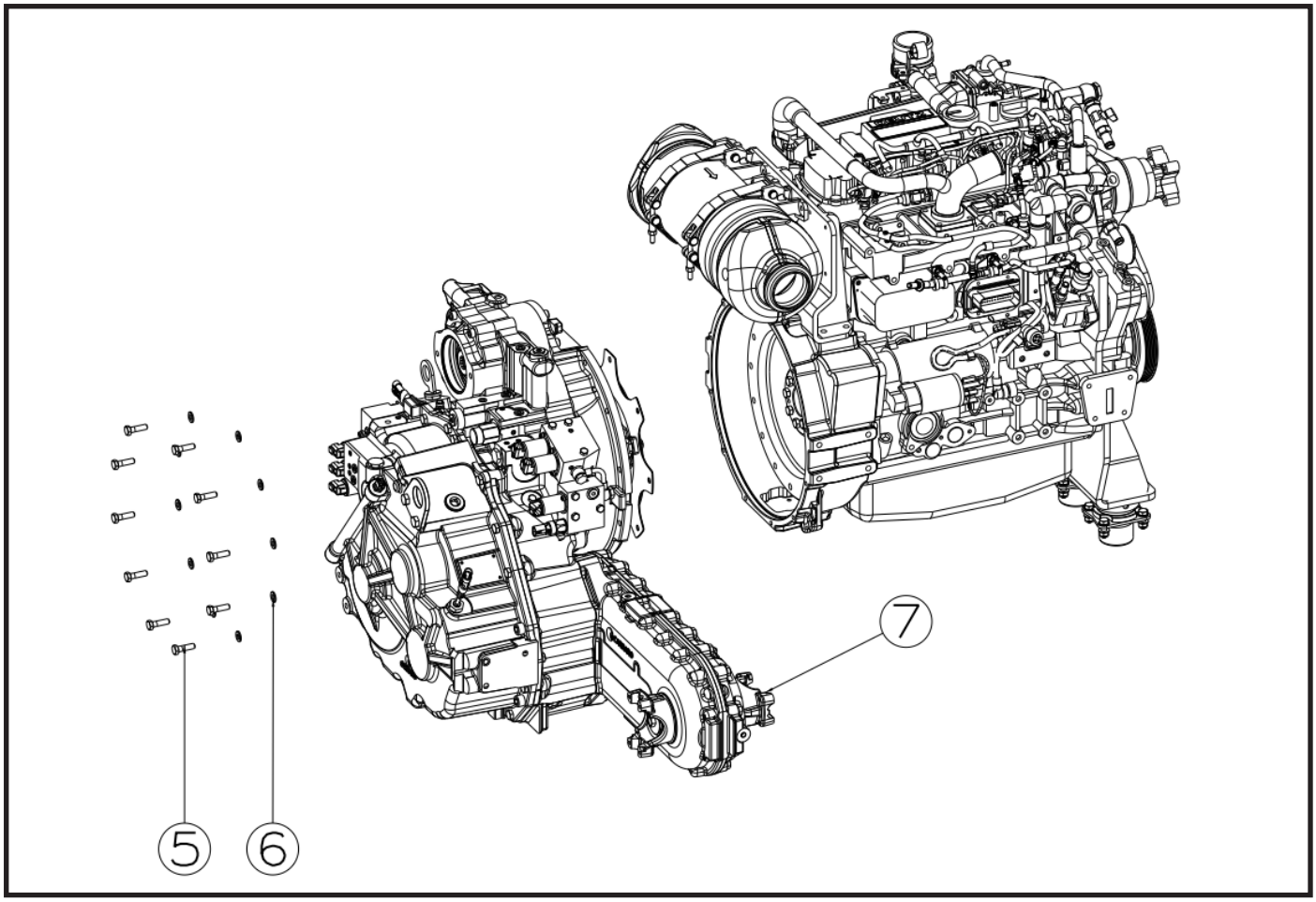

1. Attach the gearbox to the crane by the parts shown as carrying eyebolts (**7**) and place it on the engine mounting stand.
2. Remove the blind plug on the tail of the Gearbox with a short drill bit.
3. Fill the 0.46 gal. (1.75 liters) of Engine oil into the tail section with a funnel Figure-B

Figure-B

4. Move the lubricated Gearbox closer to the Engine.
5. Lift it in a controlled manner and set it on the Engine.
6. Then put washers (**6**) on the bolts (**5**).

Attach the bolts to the set Gearbox and tighten with.

*** Put Loctite 270 on the bolts.**

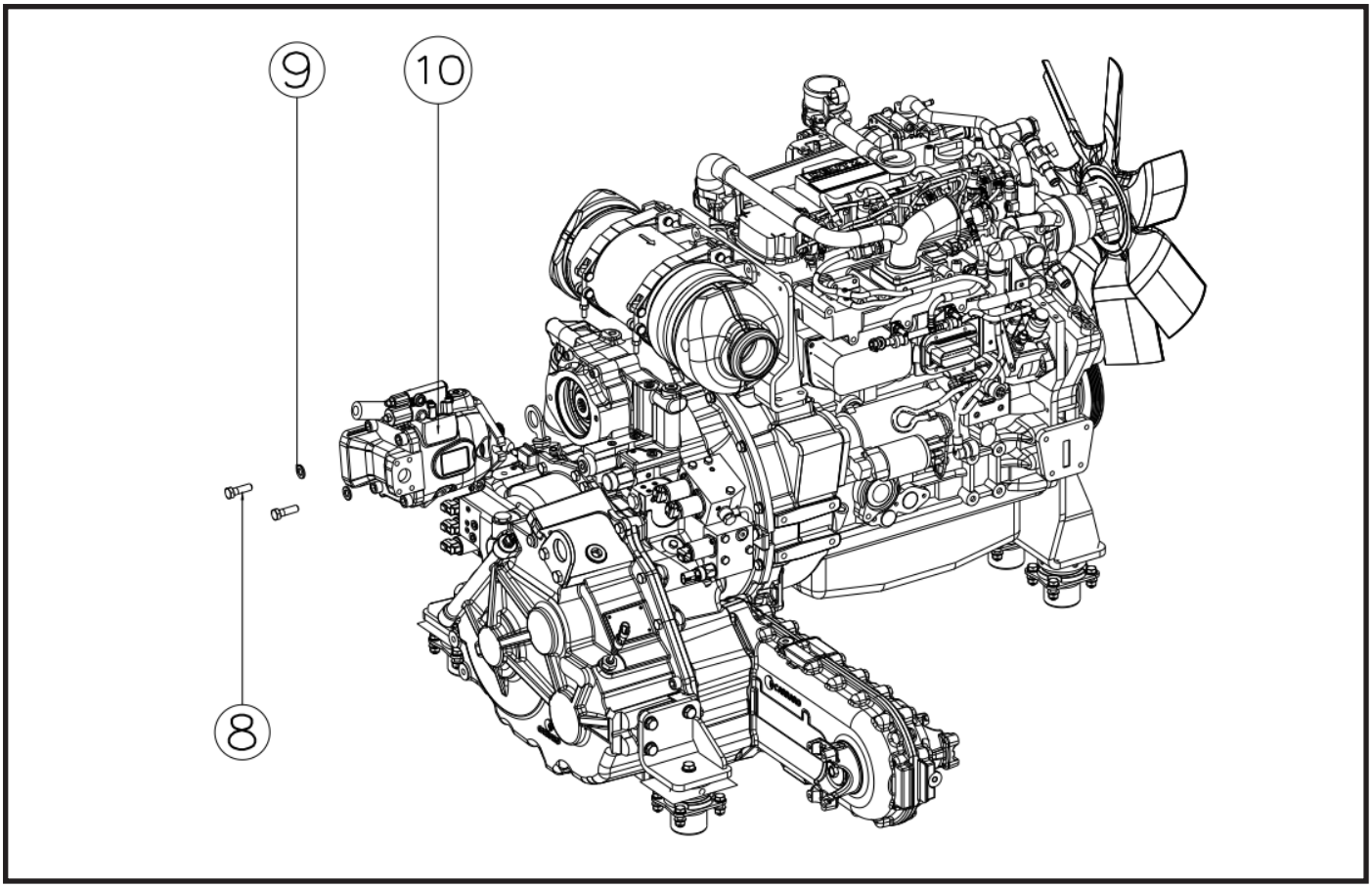

1. Bring the prepared Pump (**10**) and other connection elements to the installation area.
2. Remove the blind plug on the part where the pump will be mounted on the gearbox with flat tip screw-driver.
3. Attach the o-ring provided to the surface of the pump where it will be mounted.
4. Then, using both hands, set the pump into the transmission as shown in the image.
5. Then put washers (**8**) on the bolts (**9**).
6. Fasten the prepared bolts to the top of the pump.
7. Complete the assembly by tightening the retaining bolts with torque wrench.

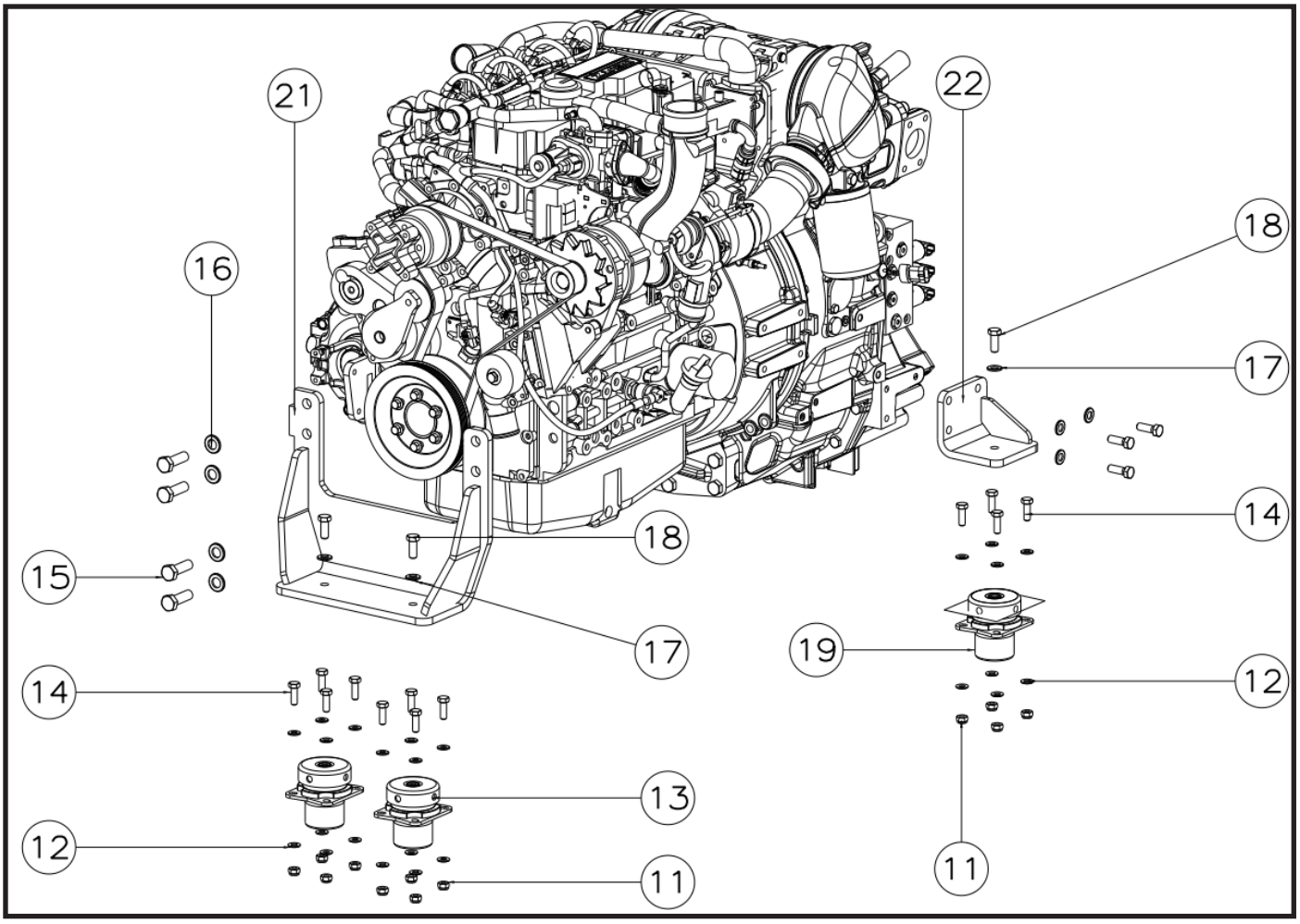
21
22
18
16
17
14
15
18
19
17
12
14
13
12
11
11

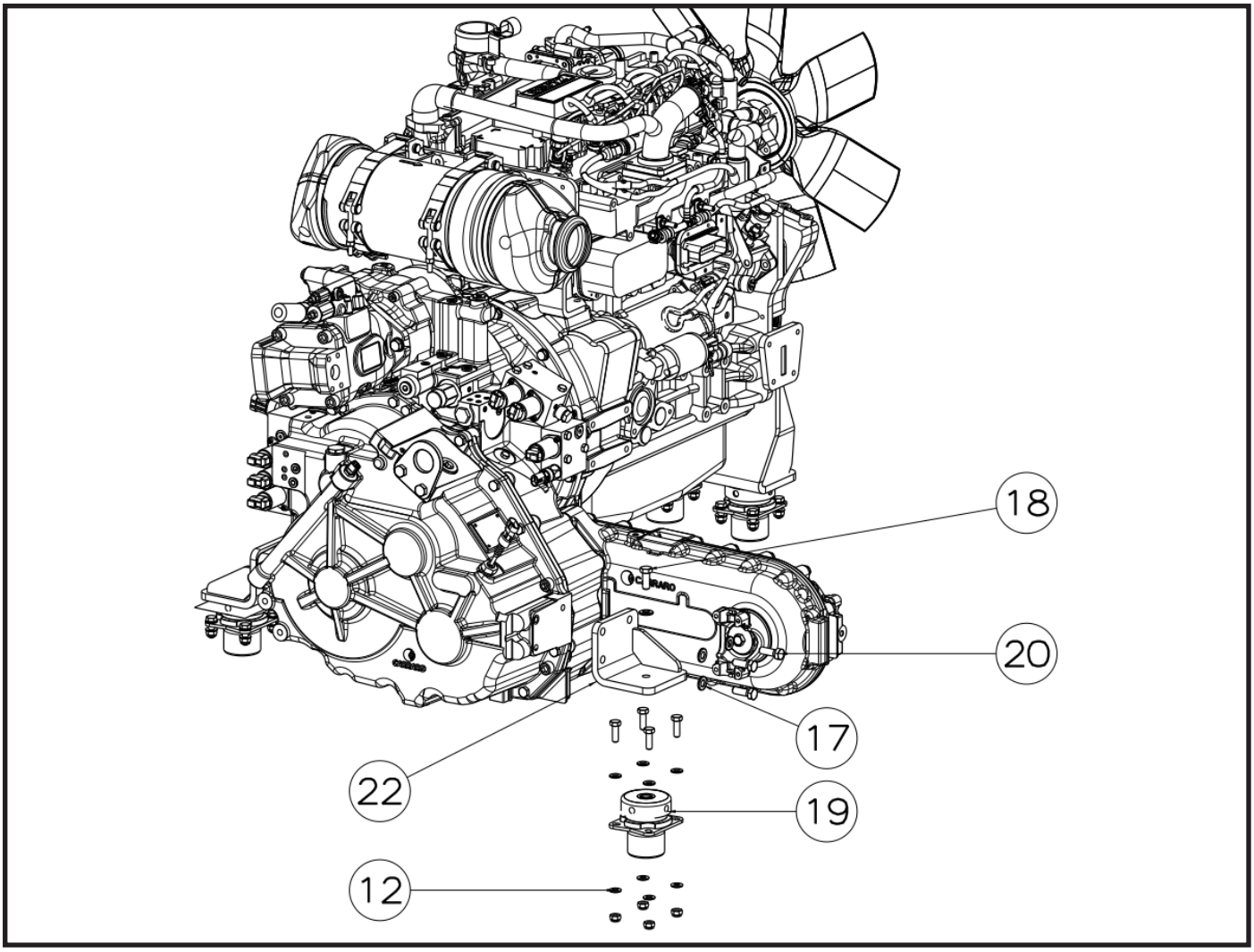

1. Bring the Engine Mounting Rear Bracket (**21**), Engine Mounting Front Bracket (**22**), Engine Mounts (**13,19**) to the installation area.
2. Set the Engine Rear Mounting Bracket and Engine Front Mounting Bracket on the engine so that the bolt holes match.
3. Place Washers (**16**) onto Bolts (**15**). Set onto Engine Rear Bracket and tighten with **24 Torque Wrench**.
4. Place Washers (**17**) onto Bolts (**20**). Set onto Engine Front Bracket and tighten with **18 Torque Wrench**.
5. Set the Engine Mounts (**13**) and (**19**) on the compartment to match the bolt holes.
6. Place the Washers (**12**) onto the Bolts (**14**). Set onto the Engine Mounts (**13***) and tighten with a* **18 Torque Wrench**.
7. Set (**12**) washers and (**11**) nuts on the tightened bolts from under the block, respectively.
8. After the engine is placed in the compartment, put the Washers (**17**) on the Bolts (**18**), set the front and rear engine ears on the blocks, tighten with a **18 Torque Wrench**.

10.4.Air Filter Assembly

Removal

1. Park the machine on firm, level ground, level the machine, fully retract the boom, lower the boom, shift the transmission (N) to NEUTRAL, set the parking brake and turn the engine OFF.
2. For warning purposes during service, place the Do Not Start Label on both the ignition key switch and the steering wheel.
3. Open the engine cover before starting the process. Allow system fluids to cool.
4. Properly disconnect battery(s). *Refer to Section — Battery, for procedure* for detailed instructions.
5. Remove the Air Filter hoses (**1**), (**2**), (**3**), (**4**).

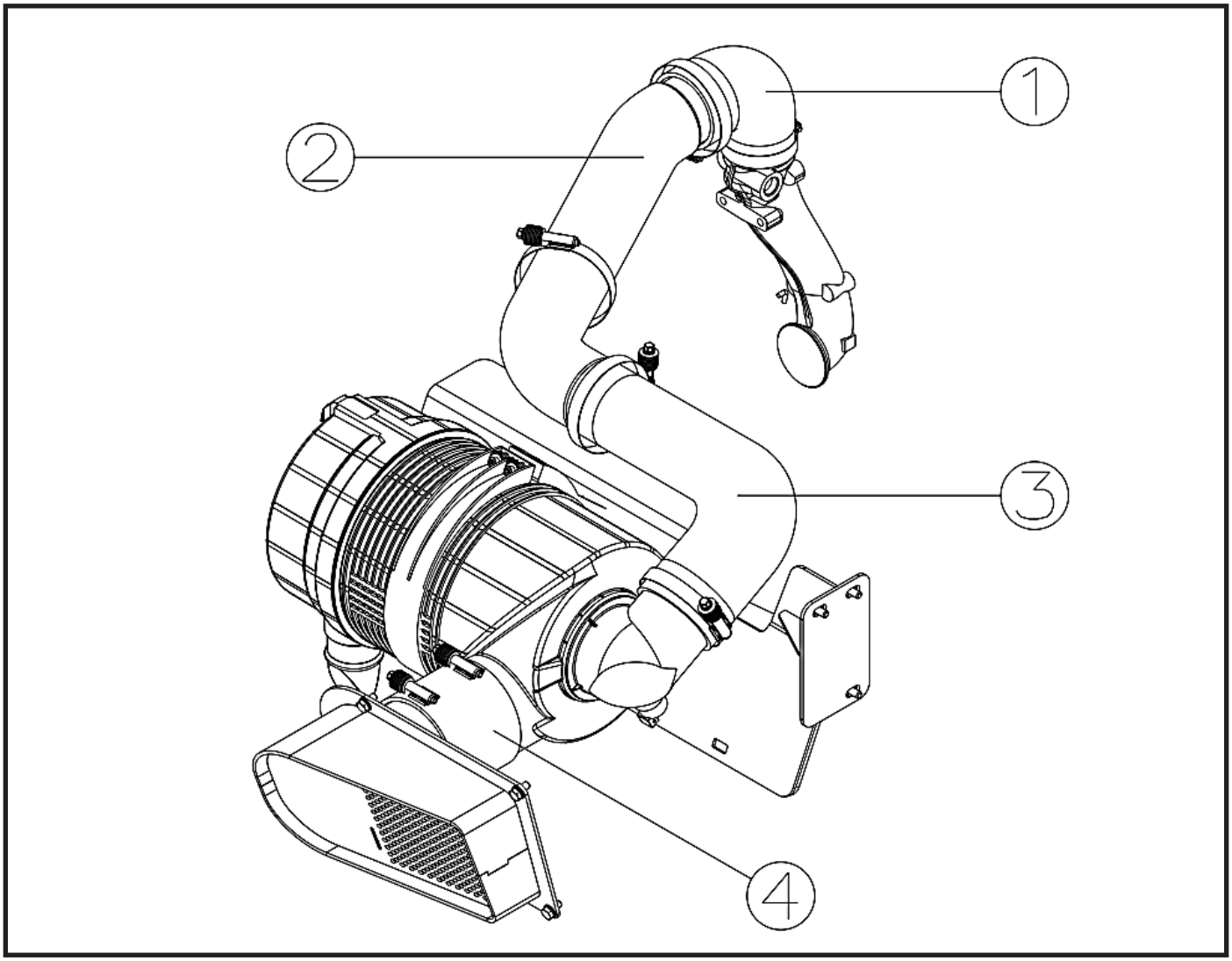

6. Remove the exhaust protection cover (**5**).

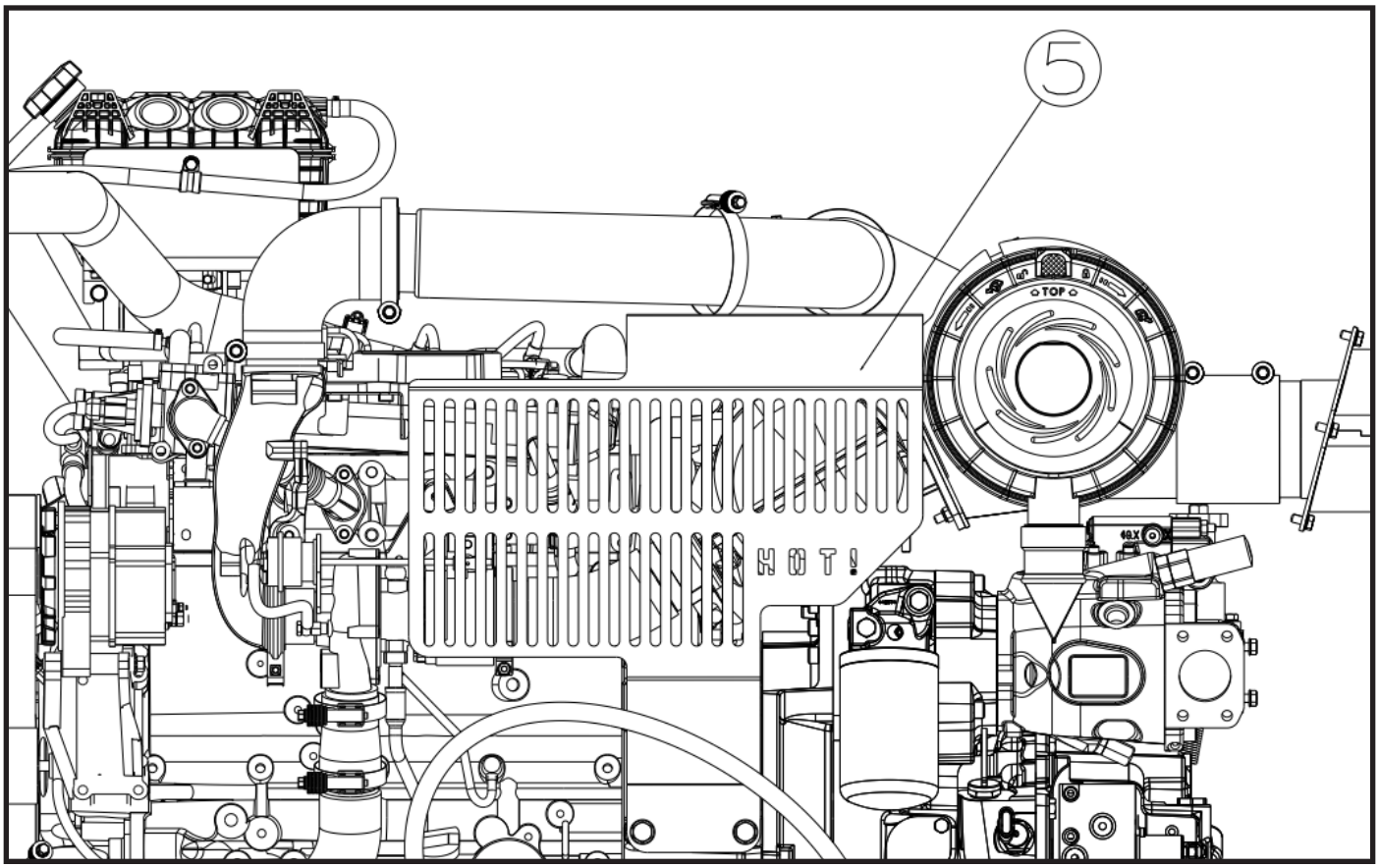

7. Remove the Air Filter brackets (**6**), (**7**).

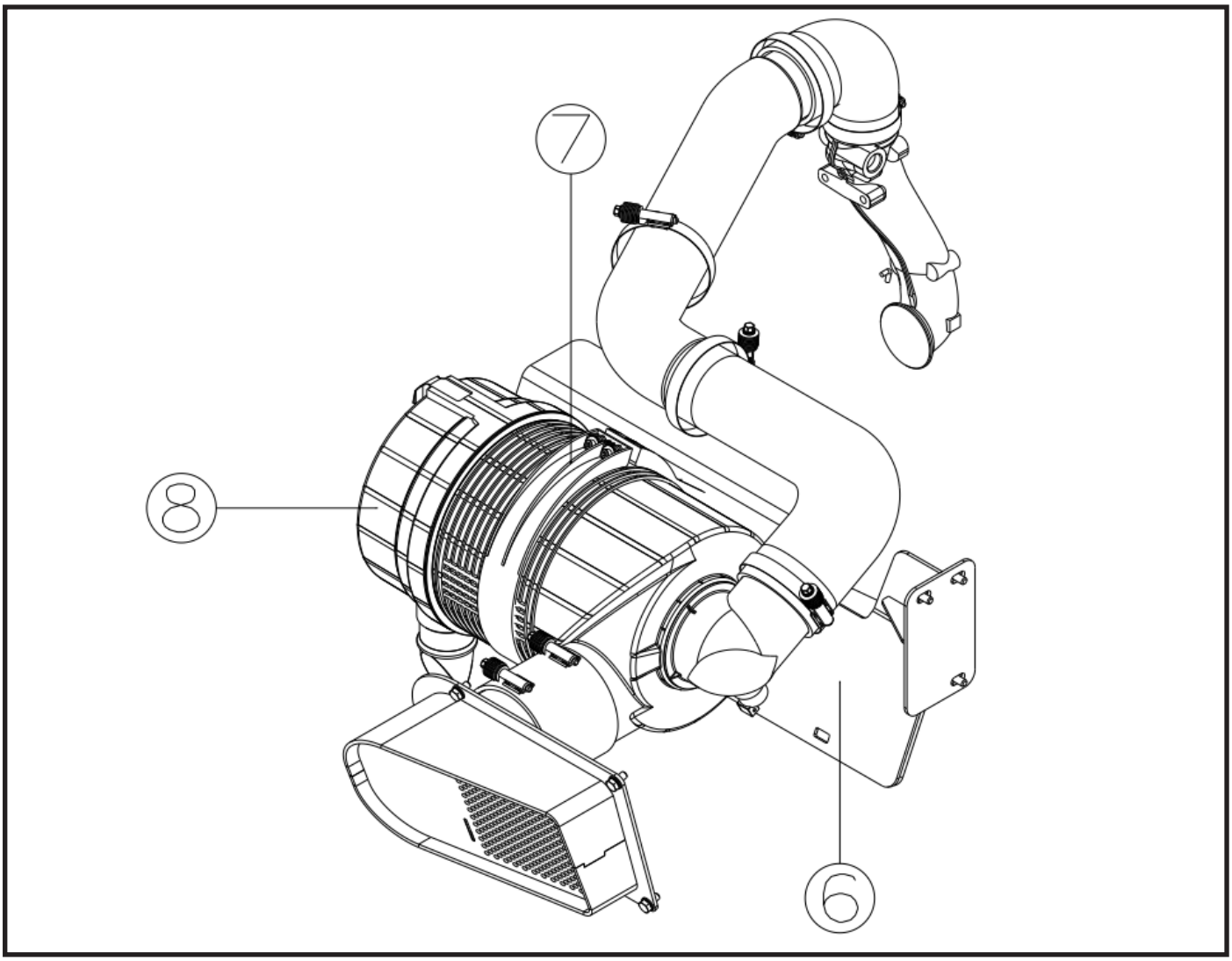

8. Remove the Air filter assembly (8).

Installation

To install, reverse the removal procedure.

10.5.Expansion Tank Replacement

A 17.4 psi (1,2 bar) cap is used on the surge tank. An incorrect or malfunctioning cap can result in the loss of coolant and a hot running engine.

Removal

1. Park the machine on firm, level ground, level the machine, fully retract the boom, lower the boom, shift the transmission (N) to NEUTRAL, set the parking brake and turn the engine OFF.
2. For warning purposes during service, place the Do Not Start Label on both the ignition key switch and the steering wheel.
3. Open the engine cover before starting the process. Allow system fluids to cool.
4. Properly disconnect battery(s). *Refer to Section — Battery, for procedure* for detailed instructions.
5. Place a suitable container under the Radiator drain and drain the Radiator water.

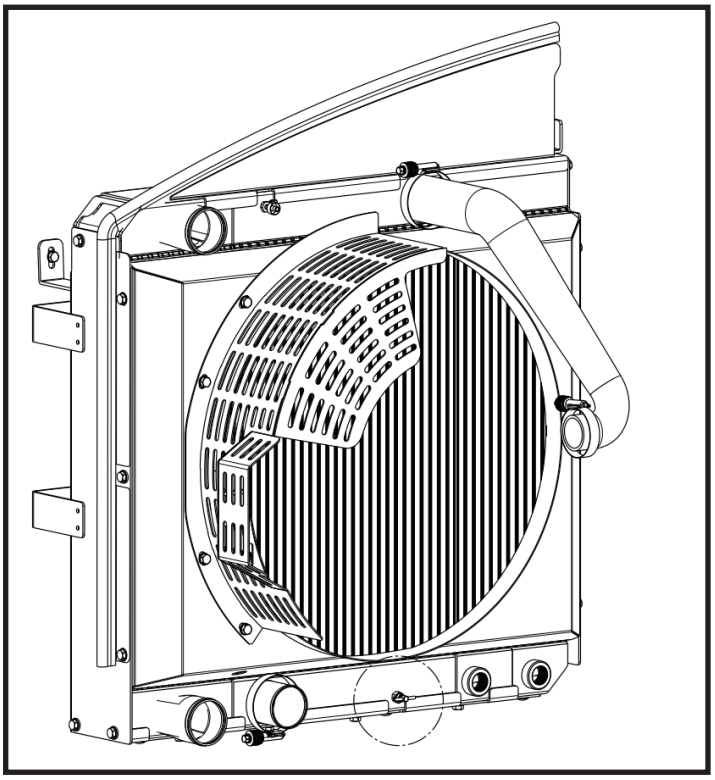

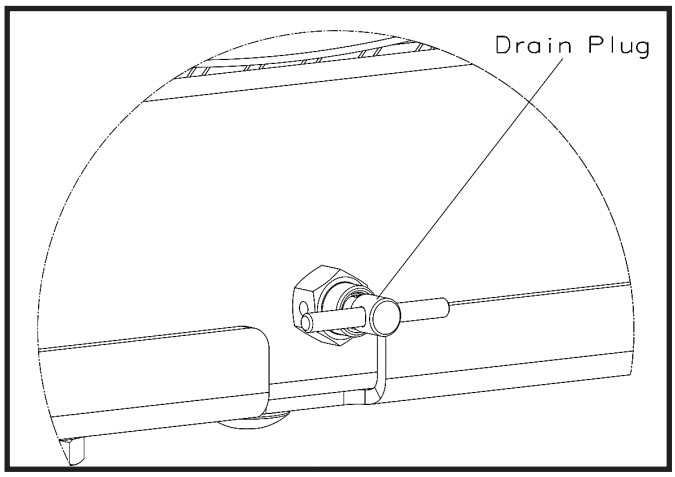

6.Remove the Radiator Venting Line (**1**), Engine Venting Line (**2**), Compensation Line (**3**).

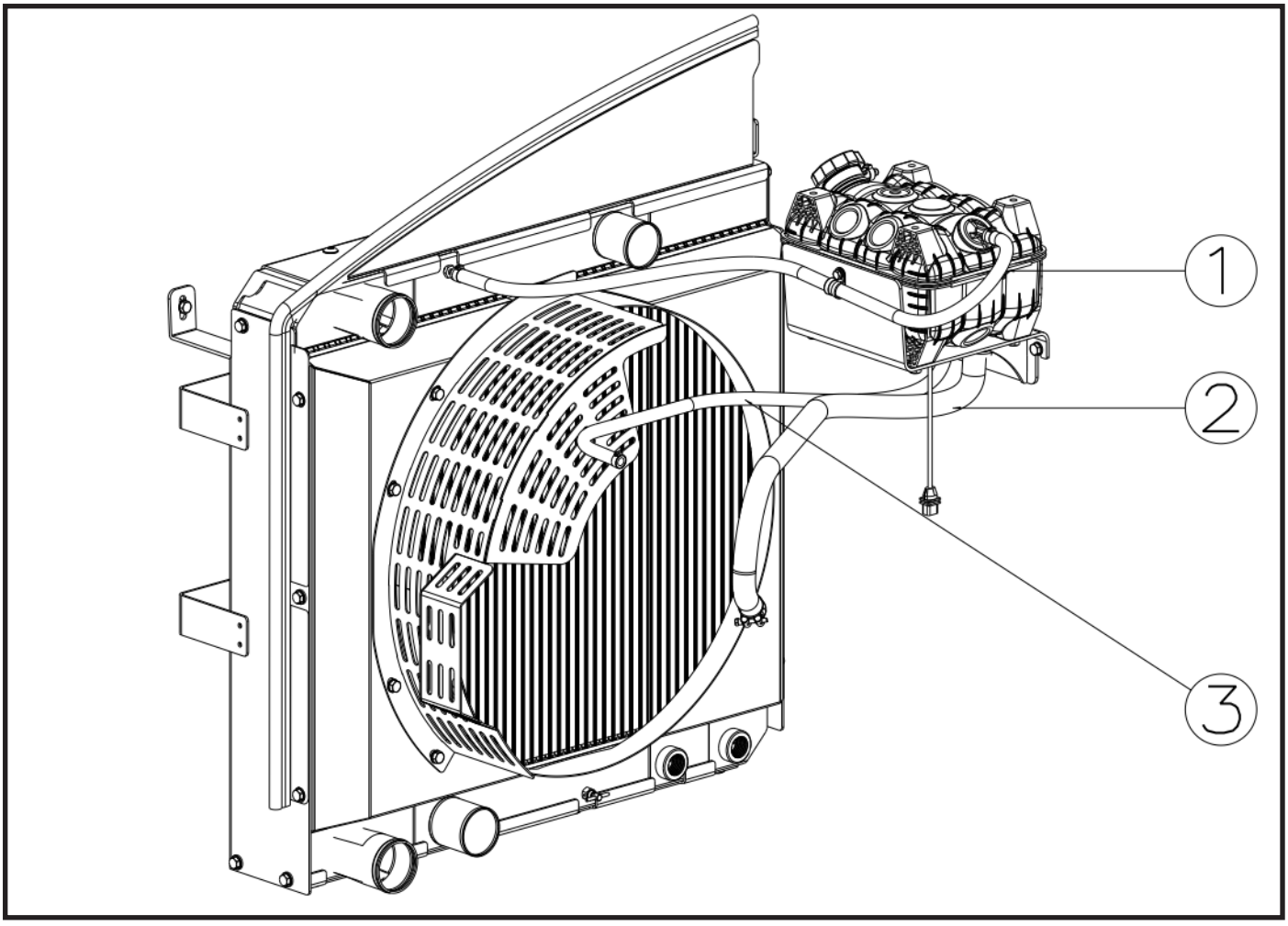

7. Remove the bracket (**4**) and Expansion Tank (**5**).

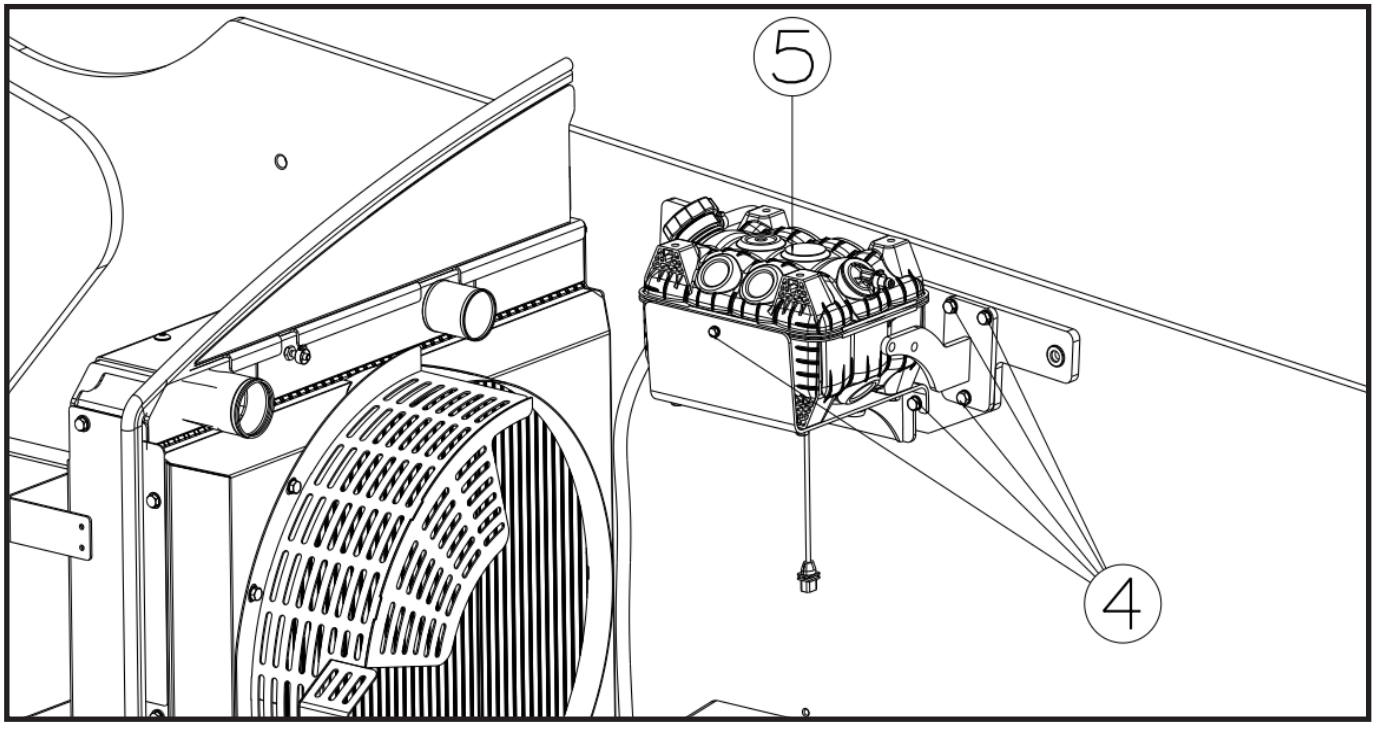

Installation

To install, reverse the removal procedure.

10.6.Radiator Assembly Replacement

- If there is no obvious damage, do the following before replacing the cooling system;
- Cooling system pressure test,
- Cooler control,
- Coolant level,
- Fan belt tension,
  Instrument panel temperature display.

If engine runs hot, check temperature of upper radiator hose.

If hose is not hot, thermostat may be stuck in closed position.

If engine has overheated, performance may suffer, indicating other damage including a leaking cylinder head gasket, cracked cylinder head or block, and/or other internal engine damage.

Removal

1. Park the machine on firm, level ground, level the machine, fully retract the boom, lower the boom, shift the transmission (N) to NEUTRAL, set the parking brake and turn the engine OFF.
2. For warning purposes during service, place the Do Not Start Label on both the ignition key switch and the steering wheel.
3. Open the engine cover. Before starting the process allow system fluids to cool.
4. Properly disconnect battery(s). *Refer to Section — Battery, for procedure* for detailed instructions.
5. Place a suitable receptacle under transmission drain plug. Remove transmission drain plug, and allow the transmission oil to drain into receptacle.
6. Transfer used transmission oil into a suitable, covered container, and label container as “Used Oil”. Dispose of used oil at an approved recycling facility. Clean and reinstall transmission drain plug.
7. Properly drain hydraulic oil system. *Refer to Section — Hydraulic Tank Replacement* for detailed instructions.
8. Slowly turn expansion tank cap to first stop and allow any pressure to escape. Remove expansion tank cap
9. Place a suitable container under the Radiator drain and drain the Radiator water.

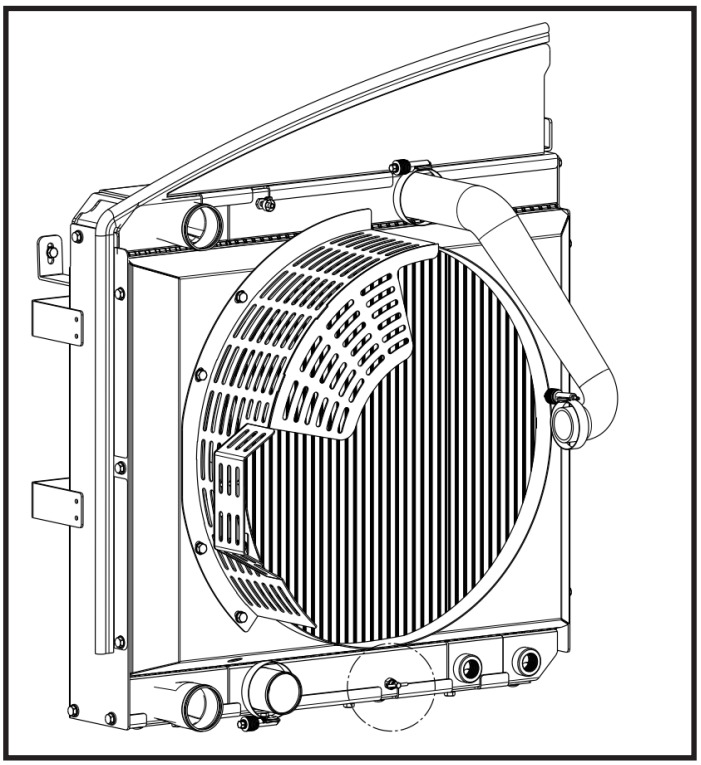

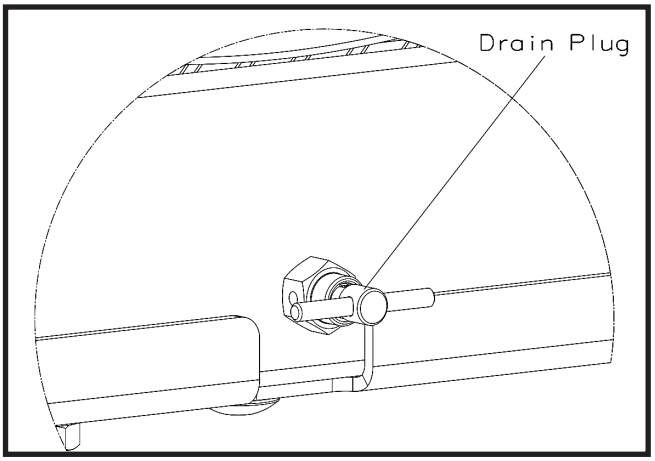

10. Remove the fan protection cover (**1**).
11. Remove the fan (**2**).

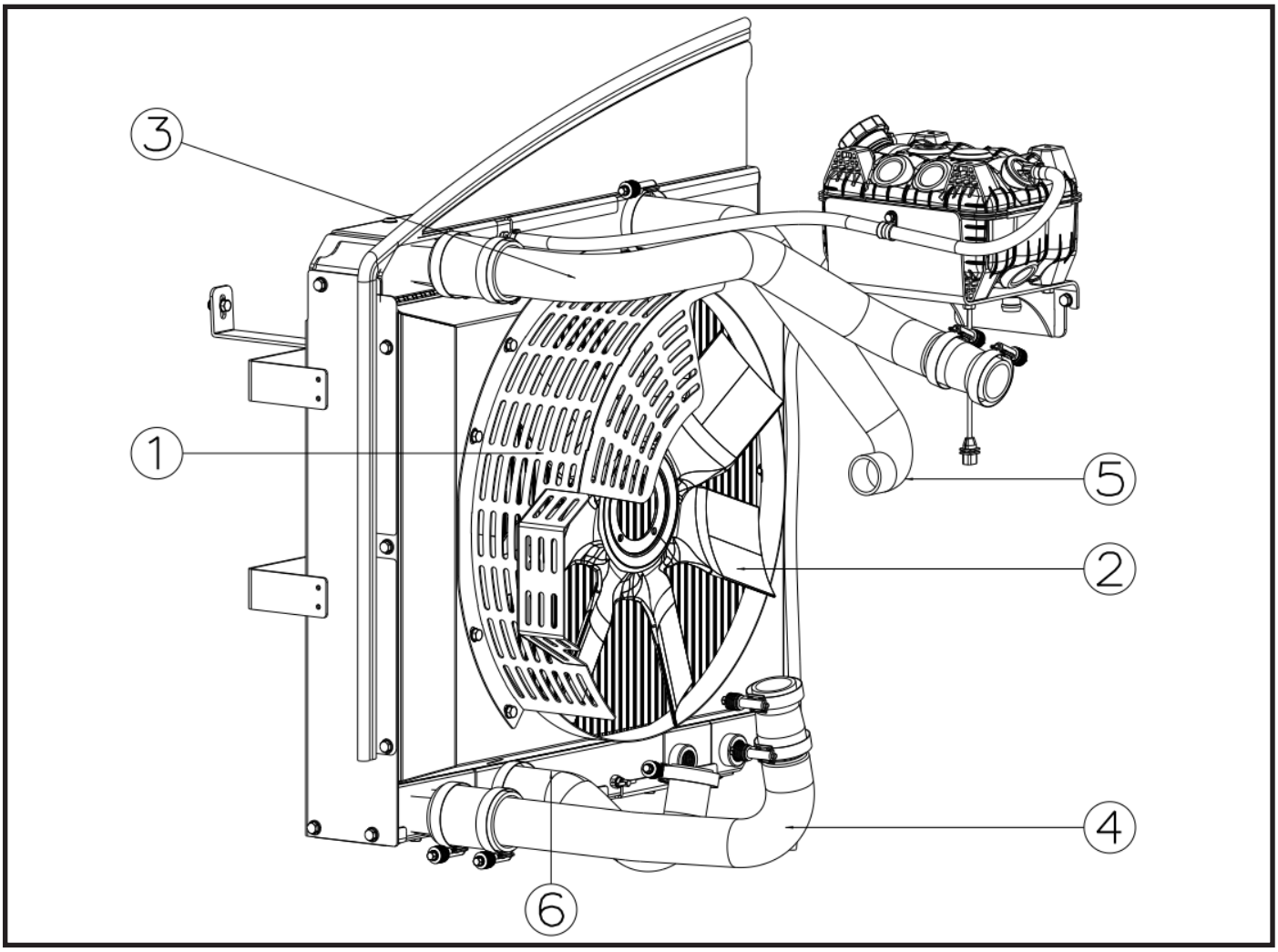

12.Remove 2 Radiator hoses (**3, 4**).
13.Remove 2 Intercooler hoses (**5, 6**).
14.Remove 2 Fuel Cooler hoses (**6**).
15.Remove 2 Oil Cooler hoses (**7**).

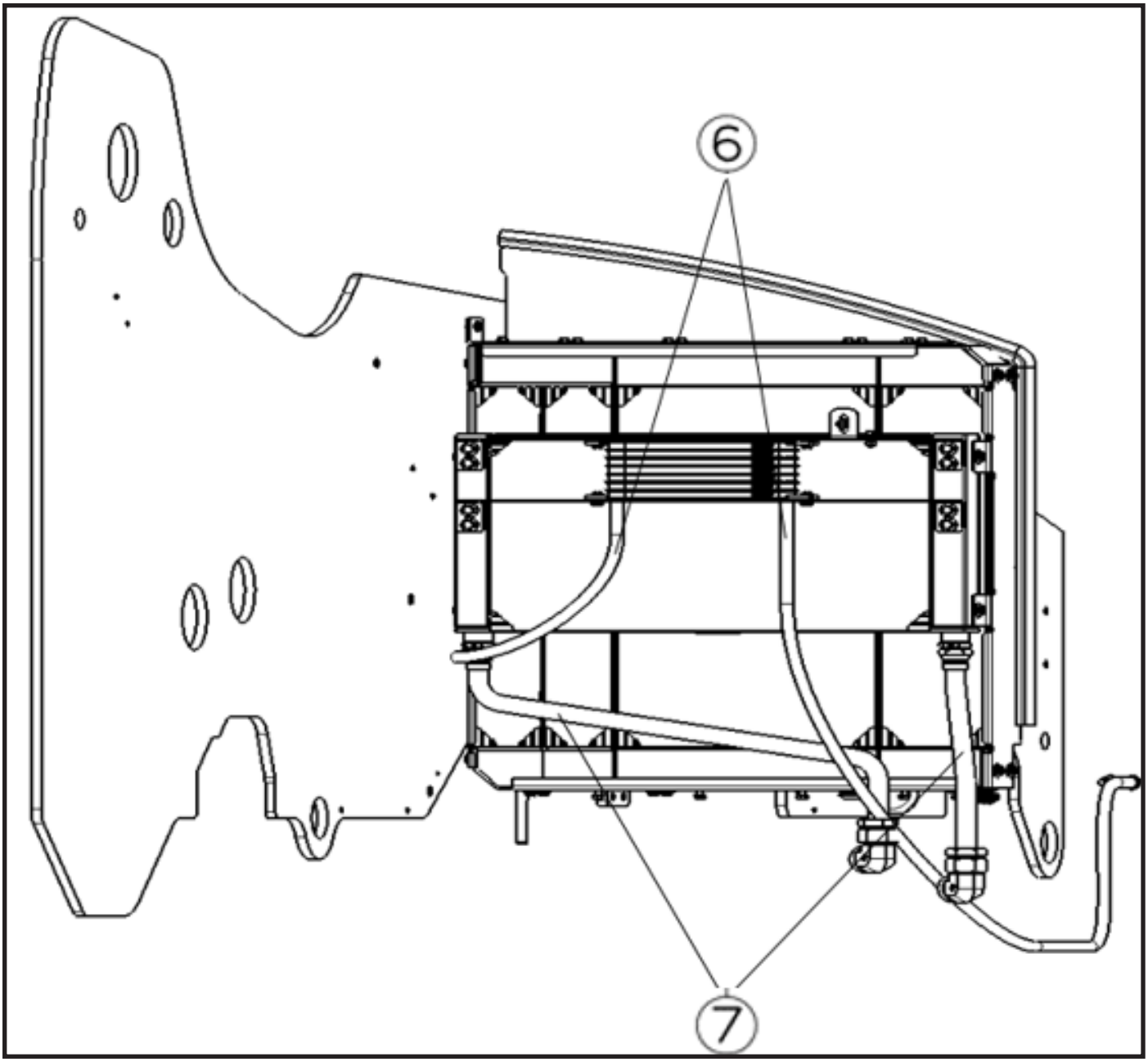

16. Remove the Radiator brackets (**8**), (**9**).

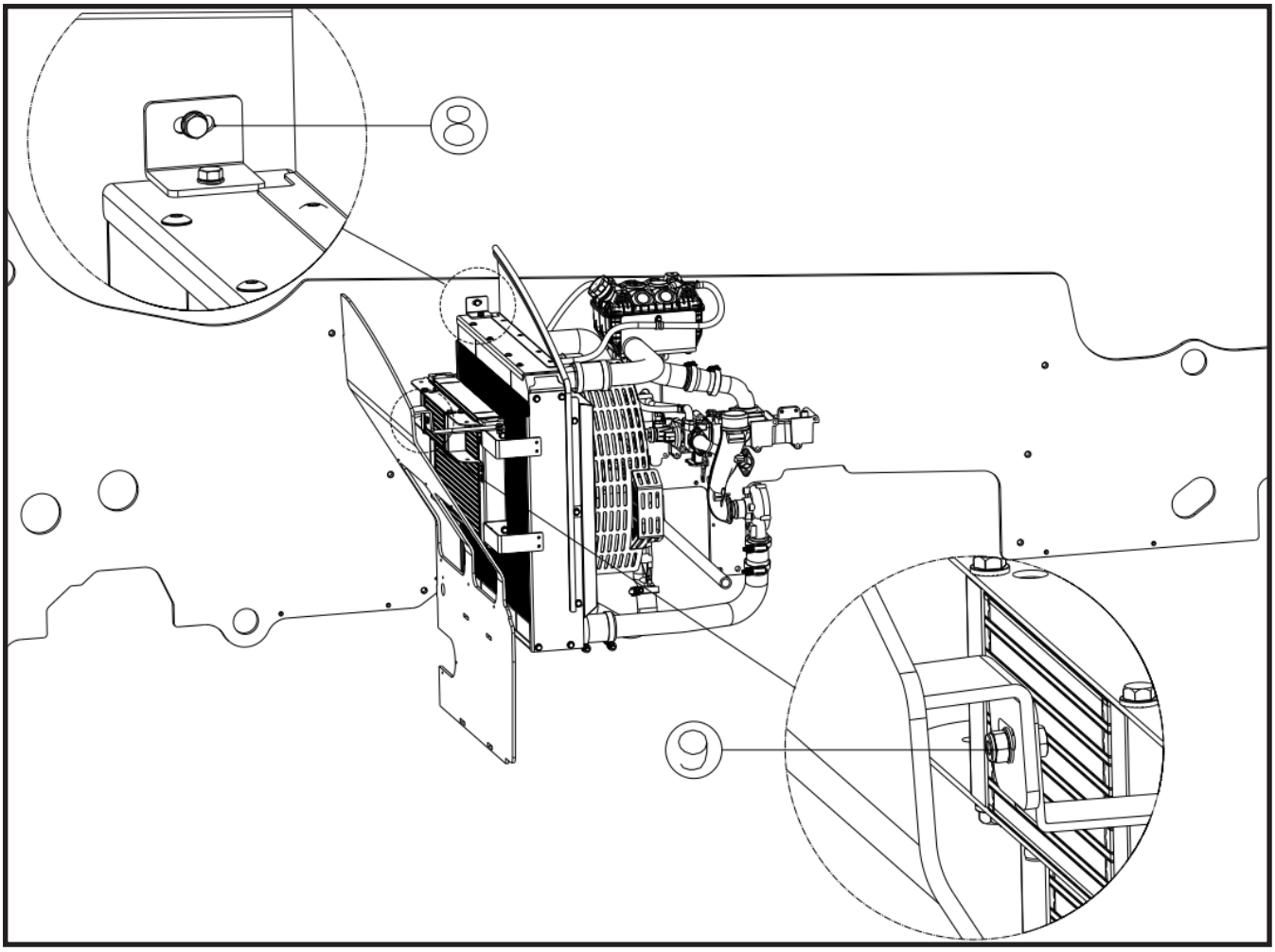

17. Remove the secrews (**10**) under the Radiator.

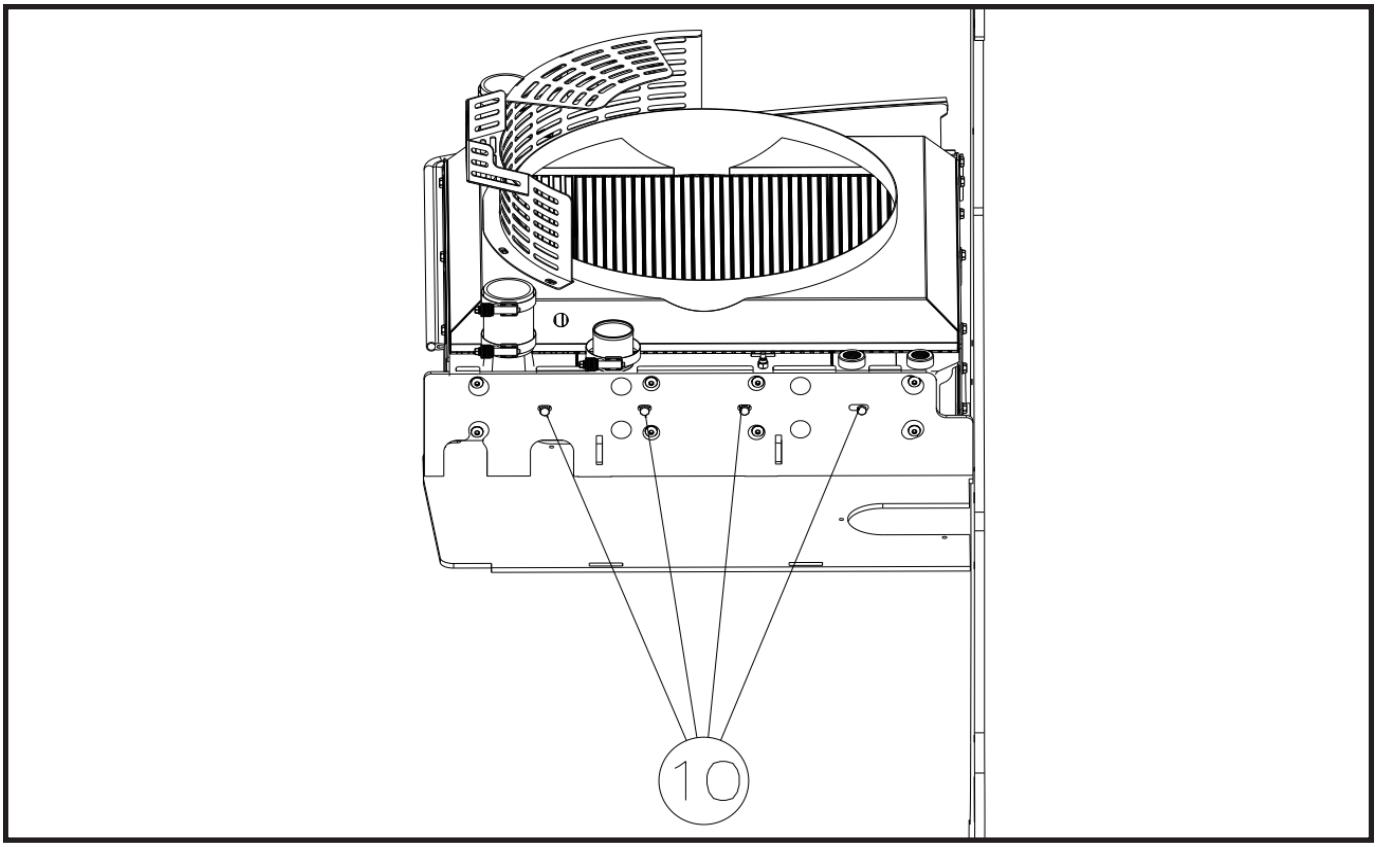

18. Remove the Radiator.

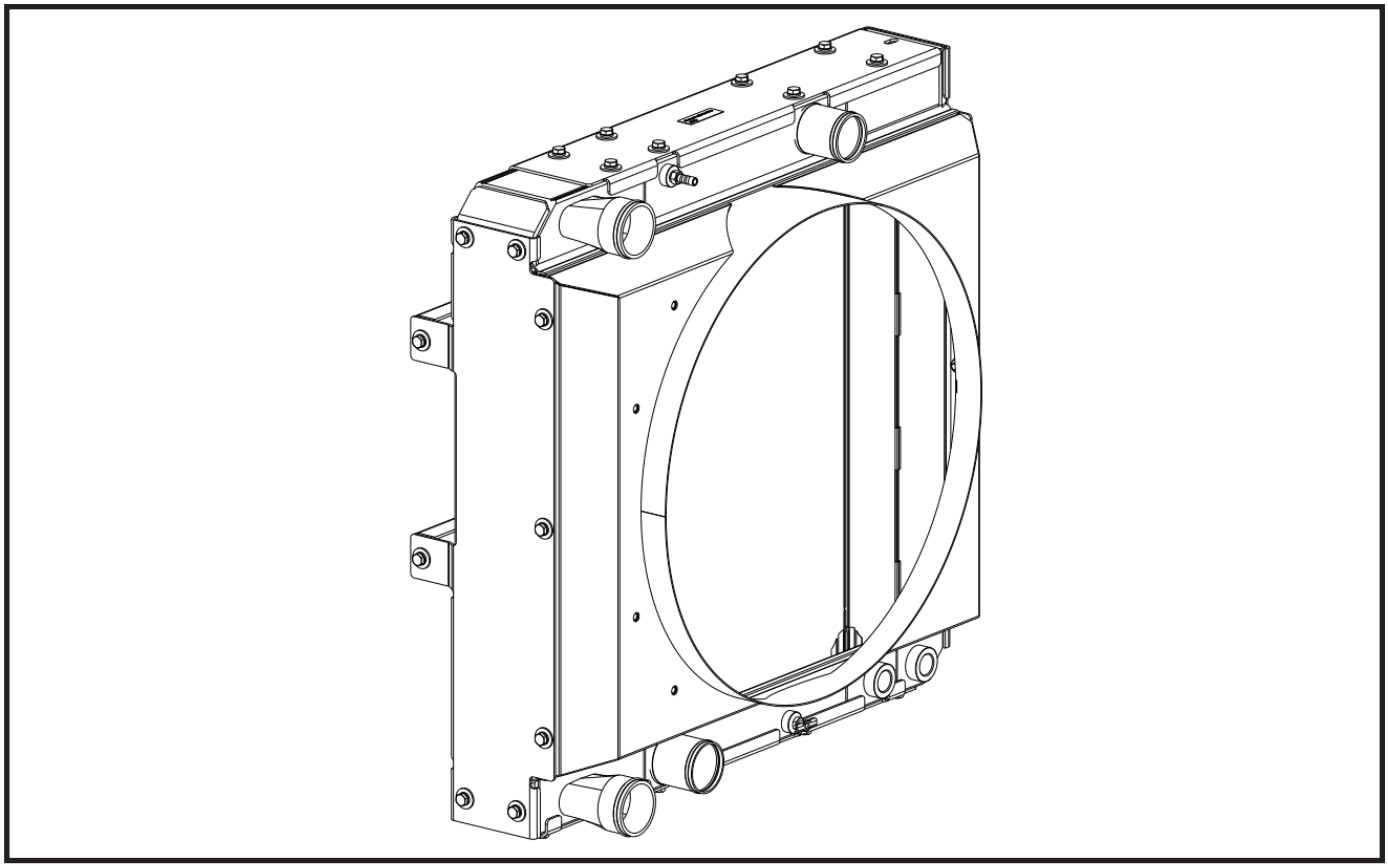

Installation

To install, reverse the removal procedure.

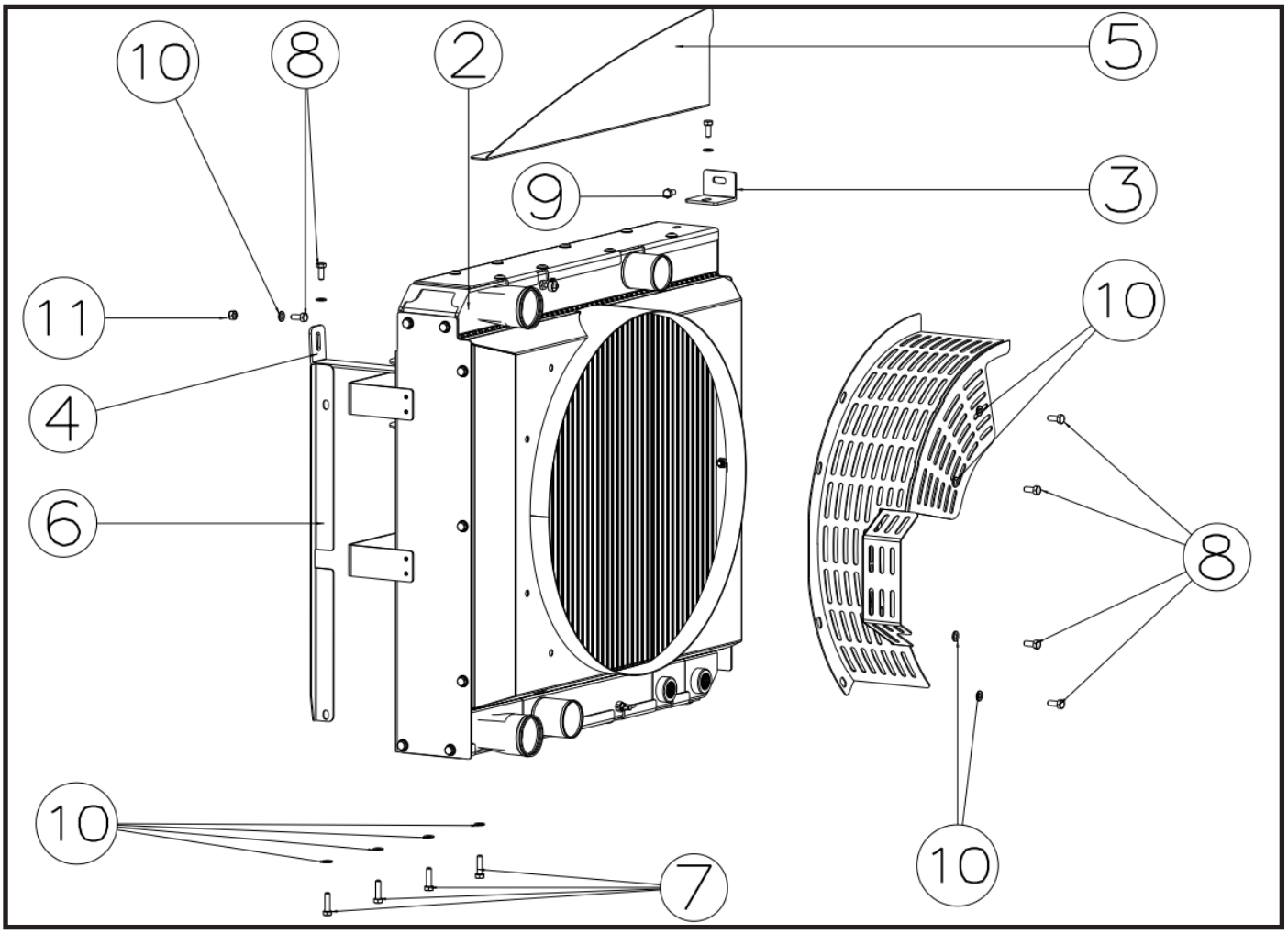

Number	Part Name	Pieces
1	Fan Cover	1
2	Radiator Complete	1
3	Output Flange Plate	1
4	Output Flange Plate	1
5	Upper Lagging Sheet	1
6	Side Lagging Sheet	1
7	Bolt, DIN 933, 8.8, M8x30, GVZ	4
8	Bolt, DIN 933, 8.8, M8x20, GVZ	7
9	Bolt, DIN 933, 8.8, M8x16, GVZ	1
10	Washer, DIN 125, M8, GVZ	10
11	Nut, DIN 985, 8, M8, GVZ	2

10.7.DEF Tank Replacement

Removal

1. Park the machine on firm, level ground, level the machine, fully retract the boom, lower the boom, shift the transmission (N) to NEUTRAL, set the parking brake and turn the engine OFF.
2. For warning purposes during service, place the Do Not Start Label on both the ignition key switch and the steering wheel.
3. Open the engine cover before starting the process. Allow system fluids to cool.
4. Properly disconnect battery(s). *Refer to Section — Battery, for procedure* for detailed instructions.
5. Remove the rear cover plate (**1**),

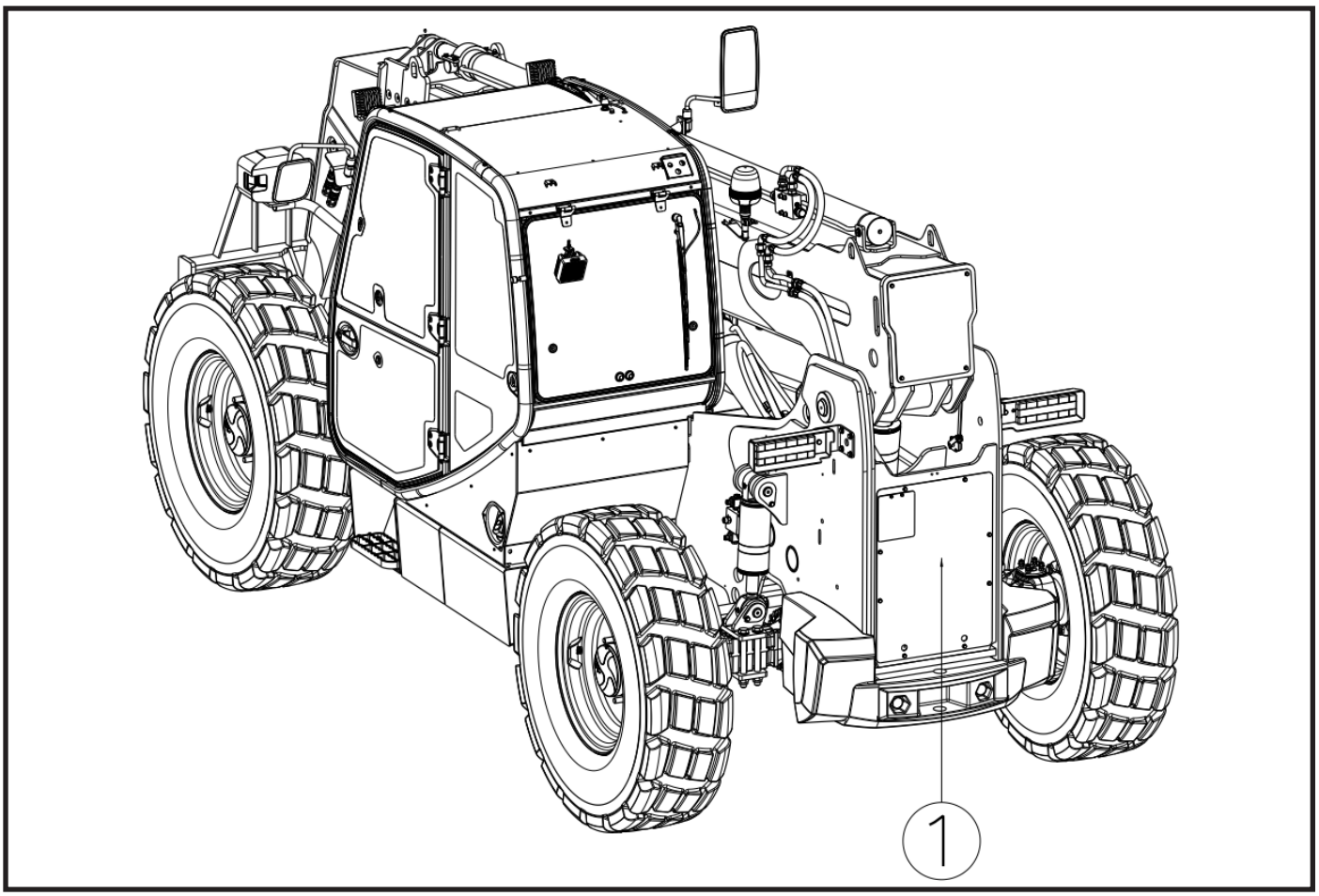

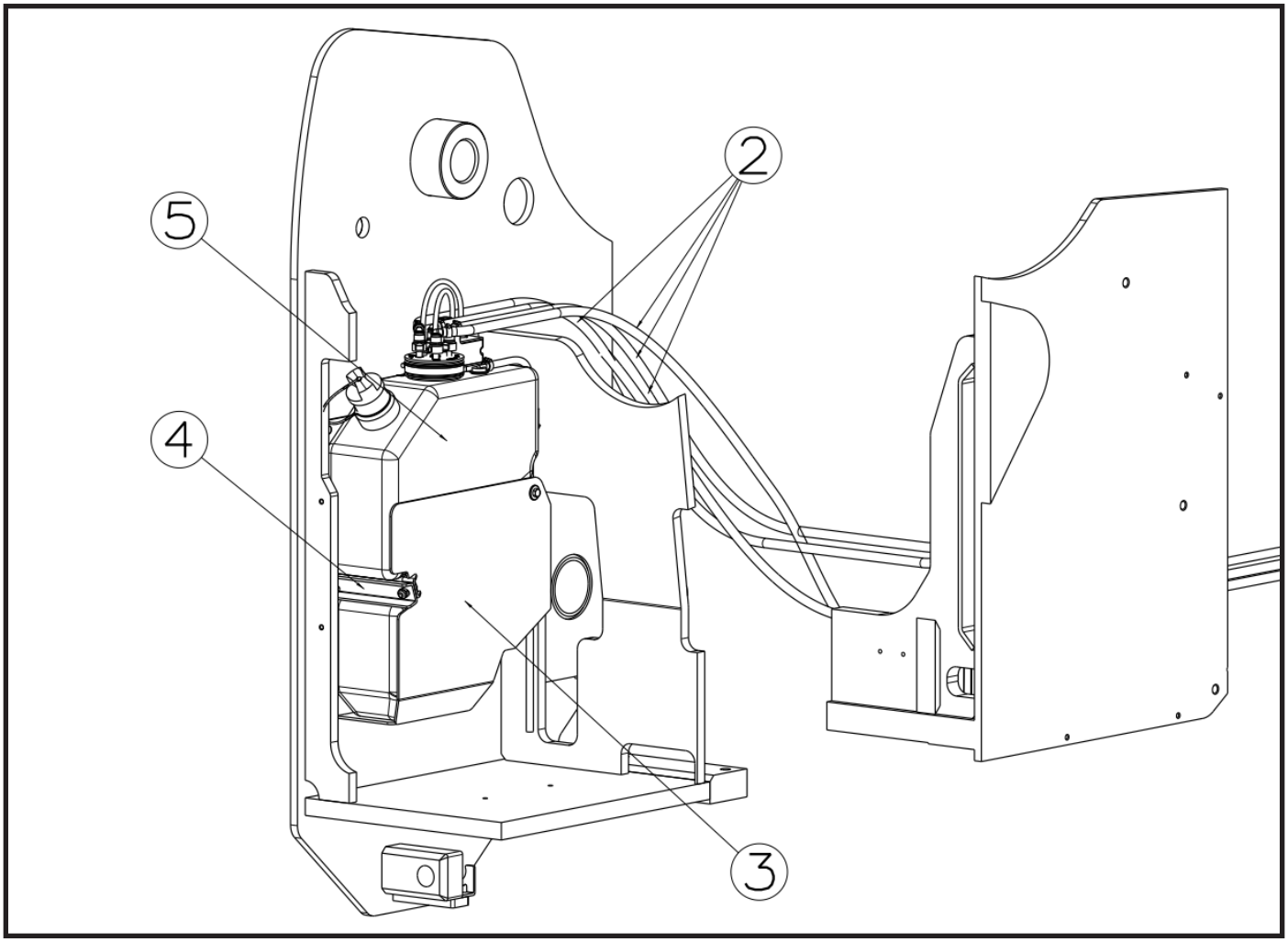

6. Remove the inlet/outlet hose connections (**2**).
7. Remove the side cover plate (**3**).
8. Remove the rear bracket (**4**).
9. Remove the DEF tank (**5**).

Installation

To install, reverse the removal procedure.

Hoses Description.

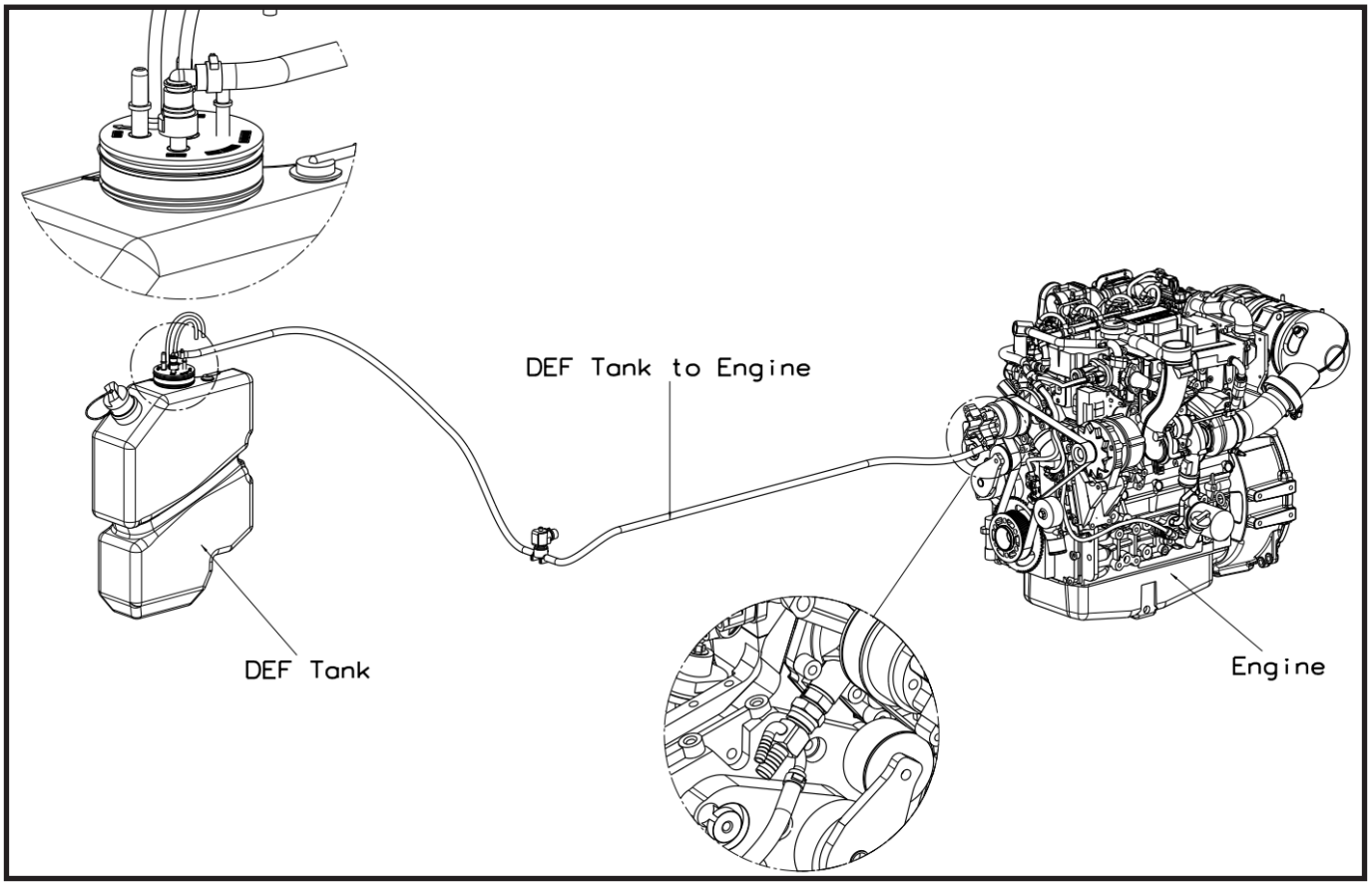

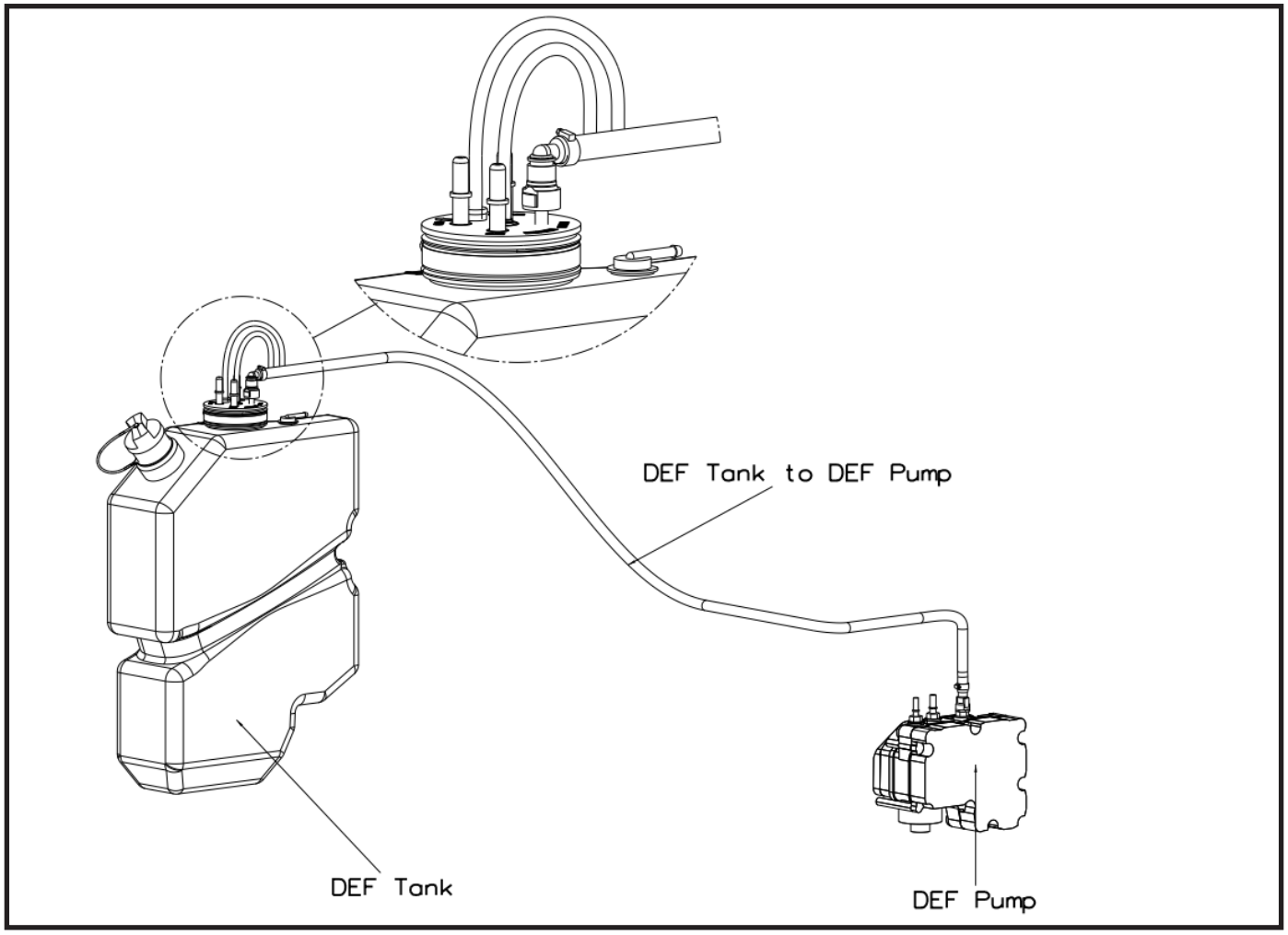
DEF Tank to DEF Pump
DEF Tank
DEF Pump

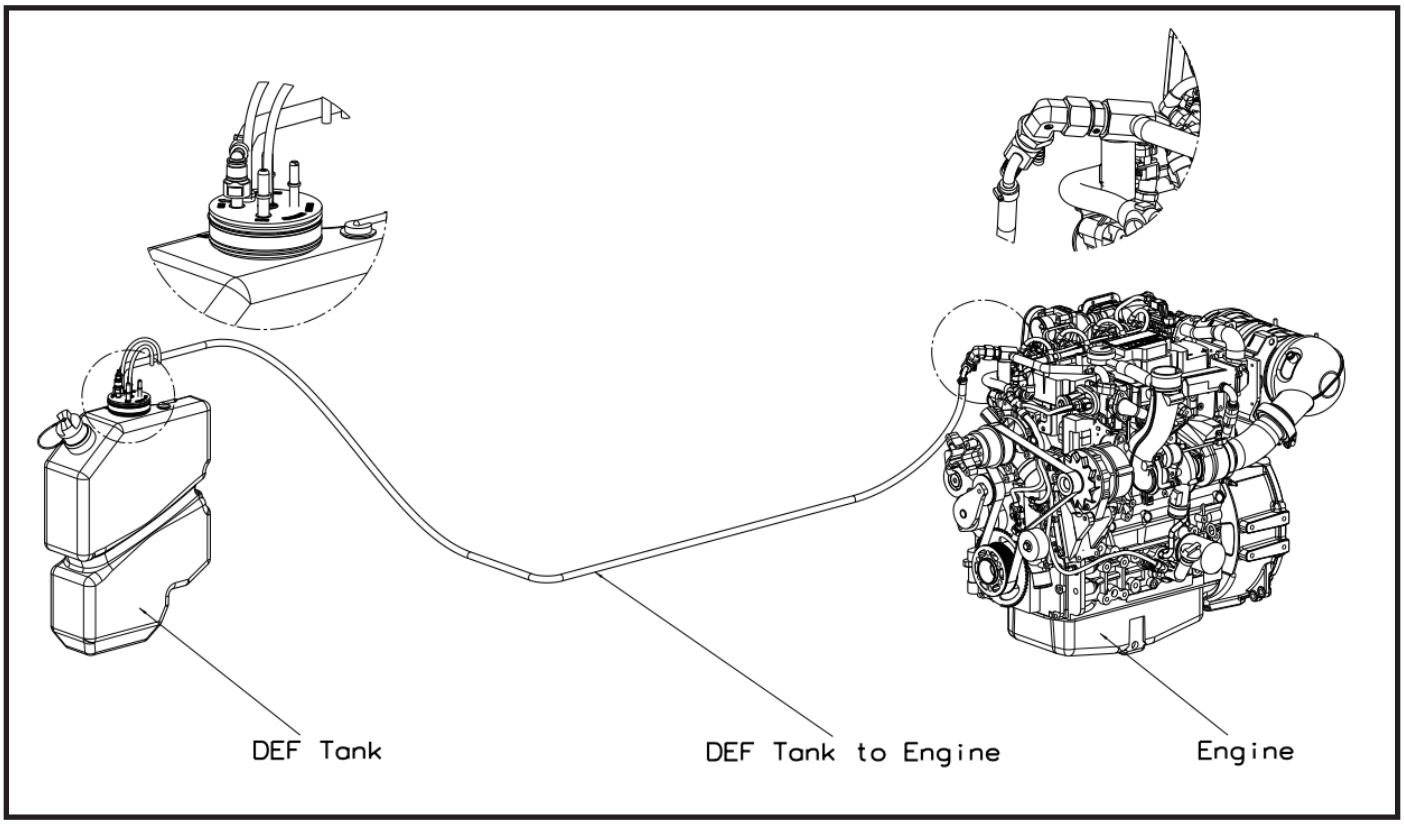
DEF Tank
DEF Tank to Engine
Engine

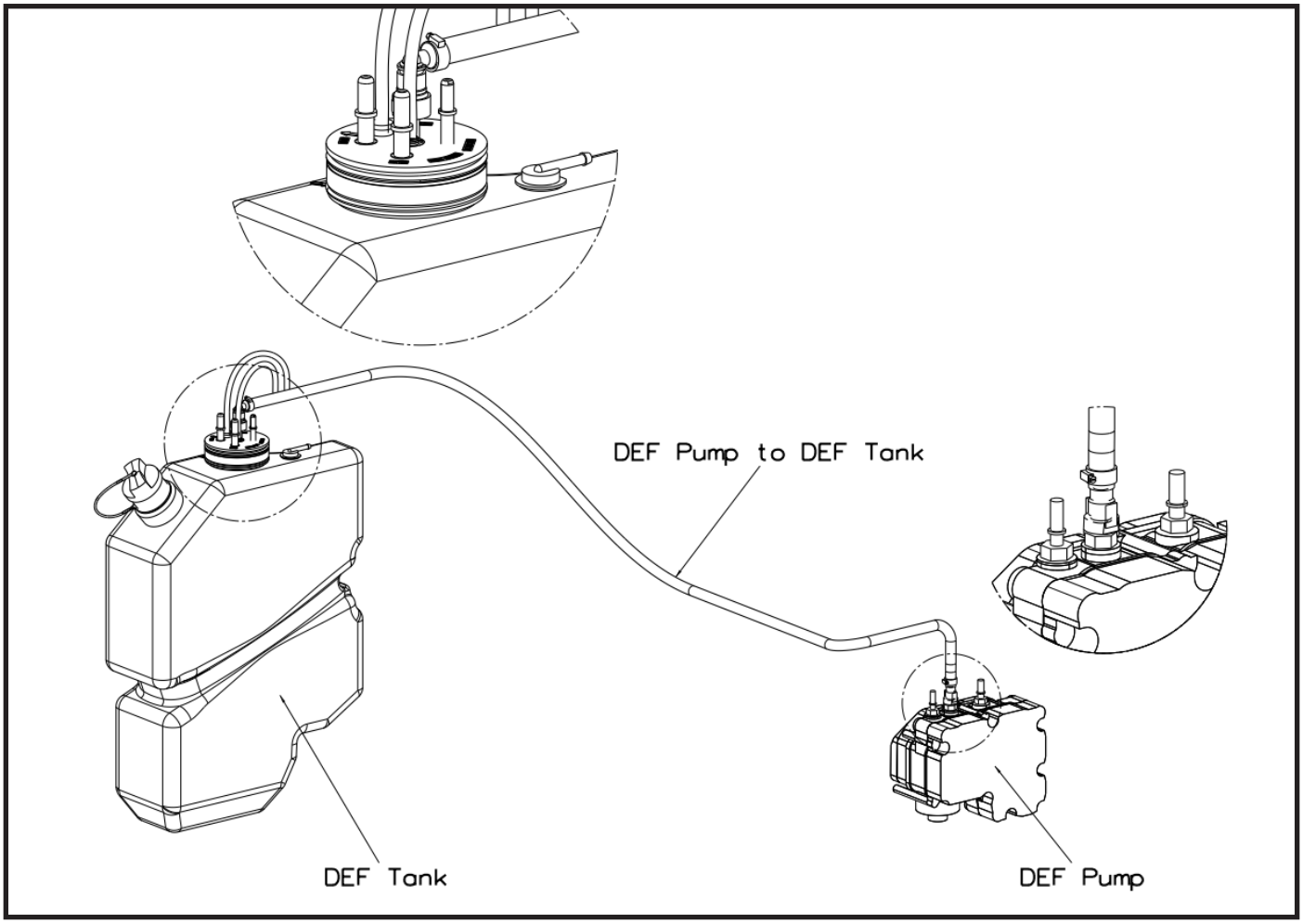
DEF Pump to DEF Tank
DEF Tank
DEF Pump

10.8.Fuel Filters Replacement

Removal

1. Park the machine on firm, level ground, level the machine, fully retract the boom, lower the boom, shift the transmission (N) to NEUTRAL, set the parking brake and turn the engine OFF.
2. For warning purposes during service, place the Do Not Start Label on both the ignition key switch and the steering wheel.
3. Open the engine cover before starting the process. Allow system fluids to cool.
4. Properly disconnect battery(s). *Refer to Section — Battery*, for procedure for detailed instructions.
5. Drain the fuel from the fuel filter properly.
6. Open the engine hood (**1**).

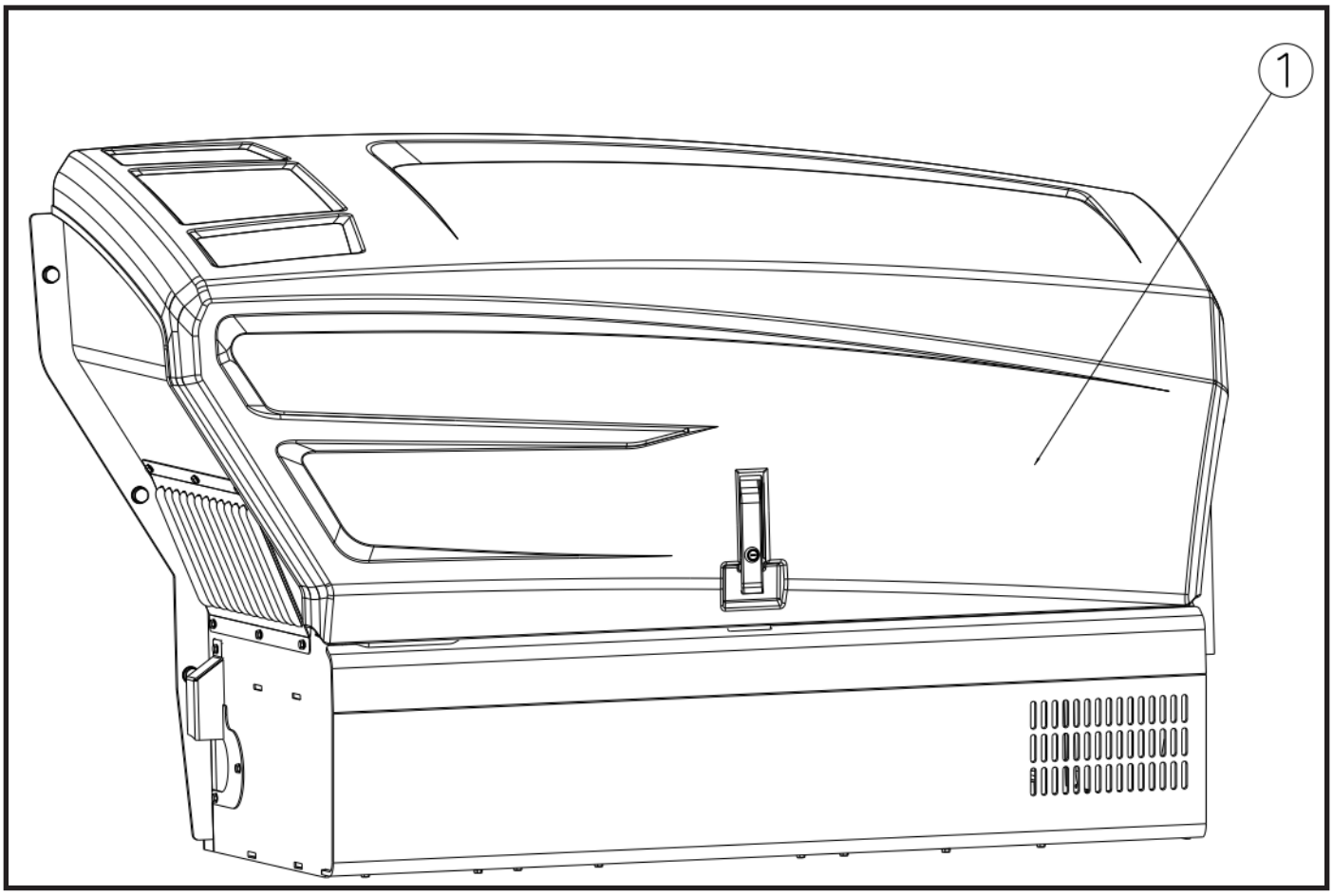

7. Remove the fuel filters hoses.

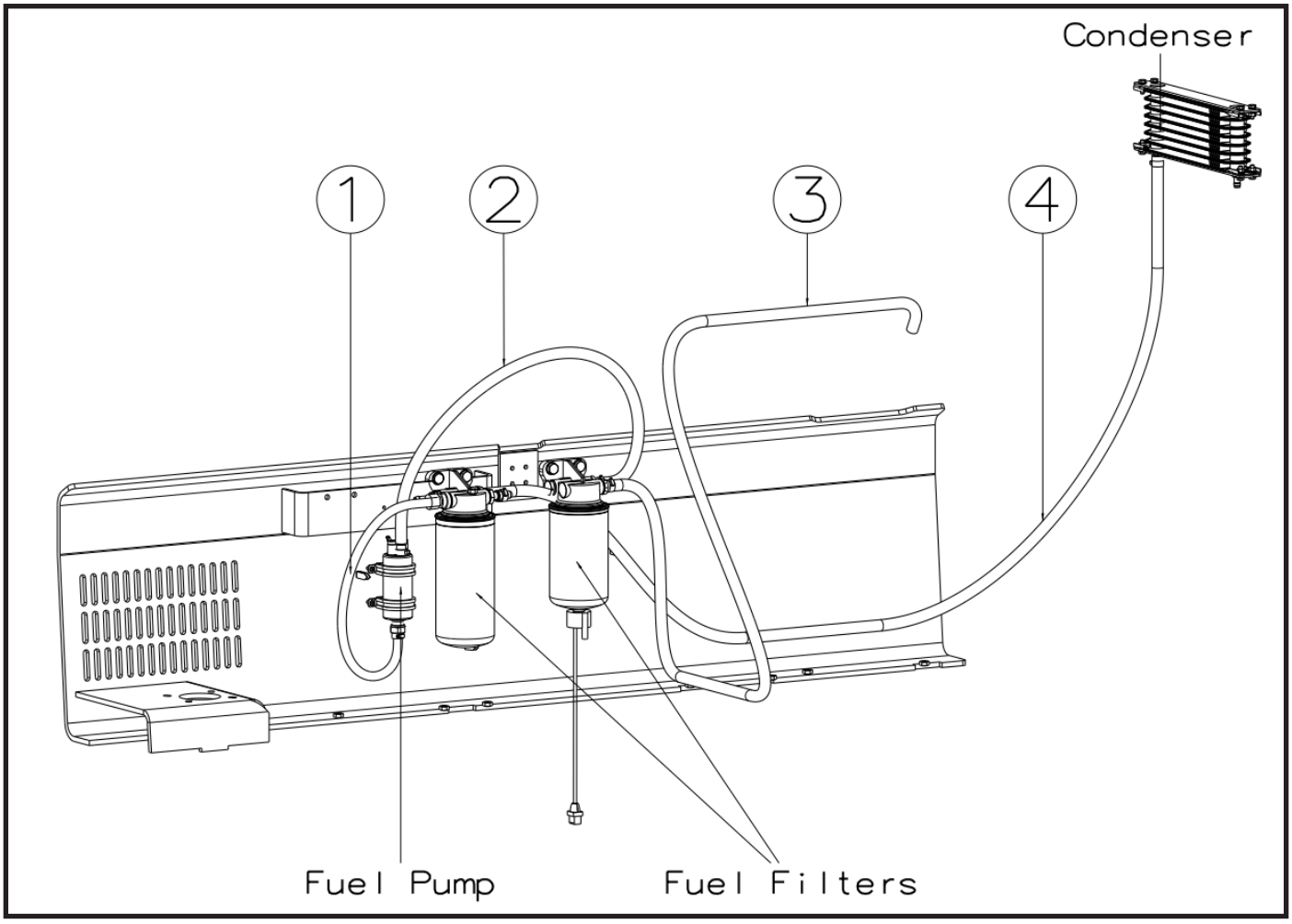

FILTER HOSES	
1	Fuel Filter to Fuel Pump
2	Fuel Filter to Fuel Pump
3	Fuel Filter to Engine
4	Fuel Filter to Condenser

1

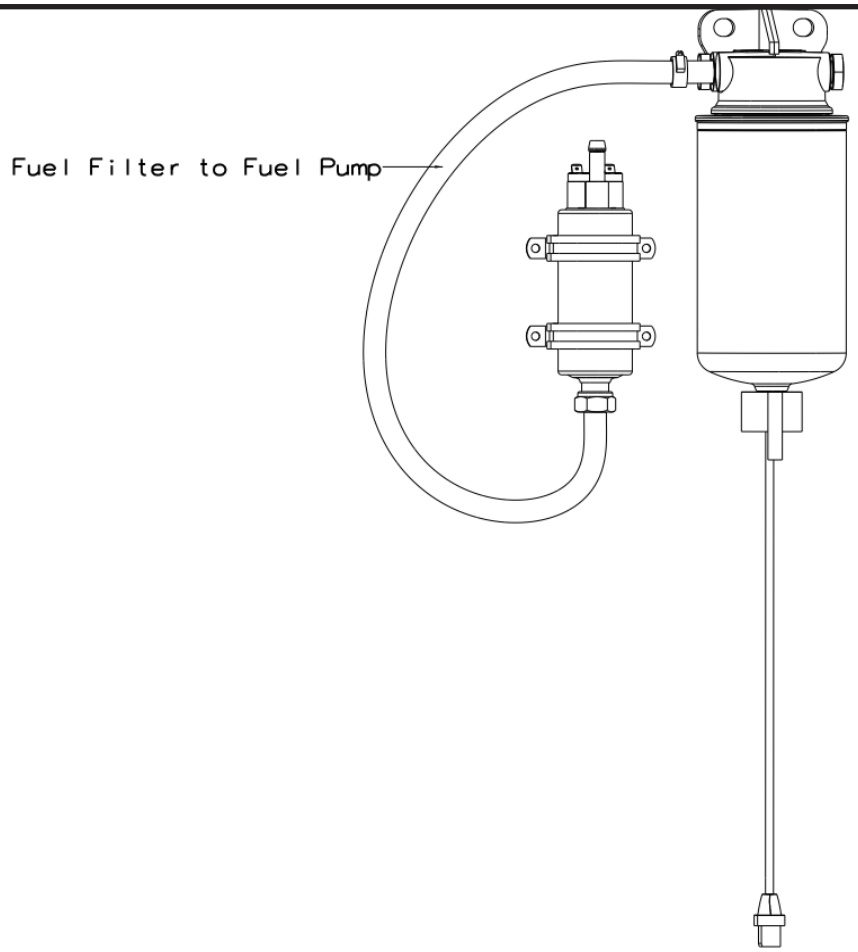

2

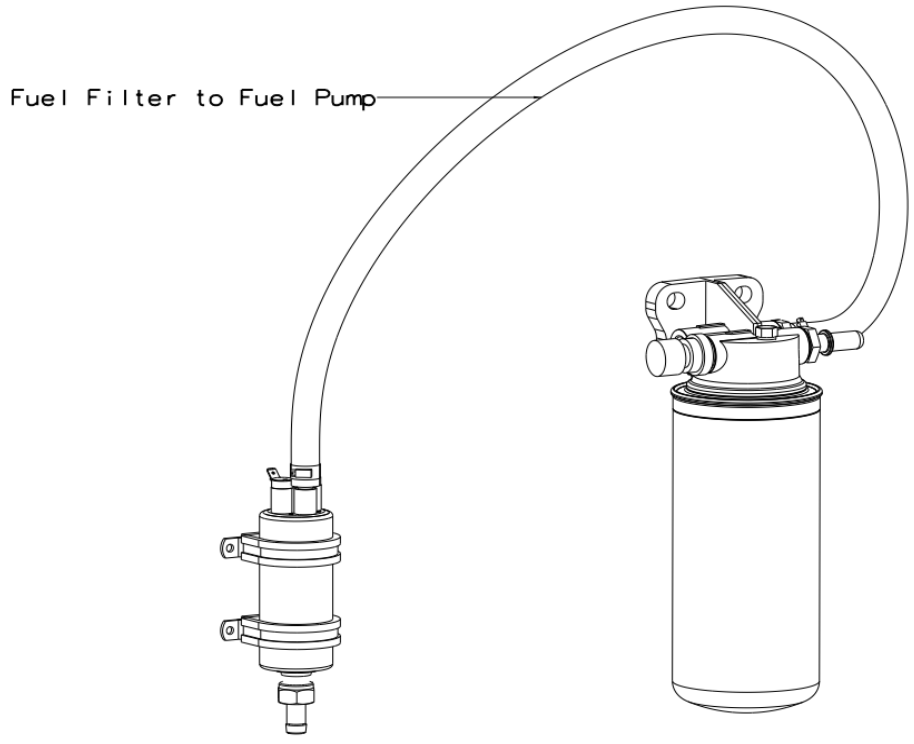

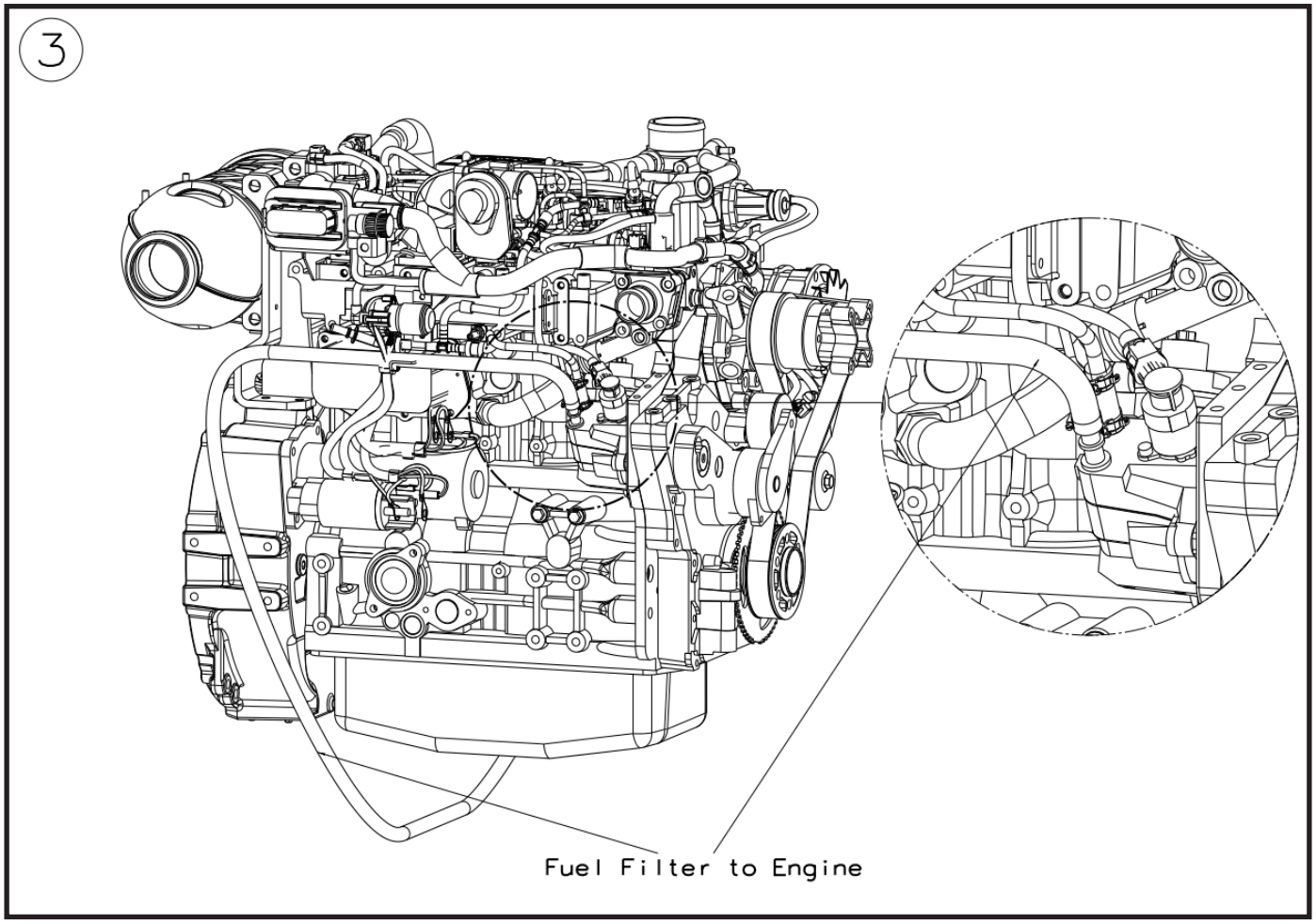
3
Fuel Filter to Engine

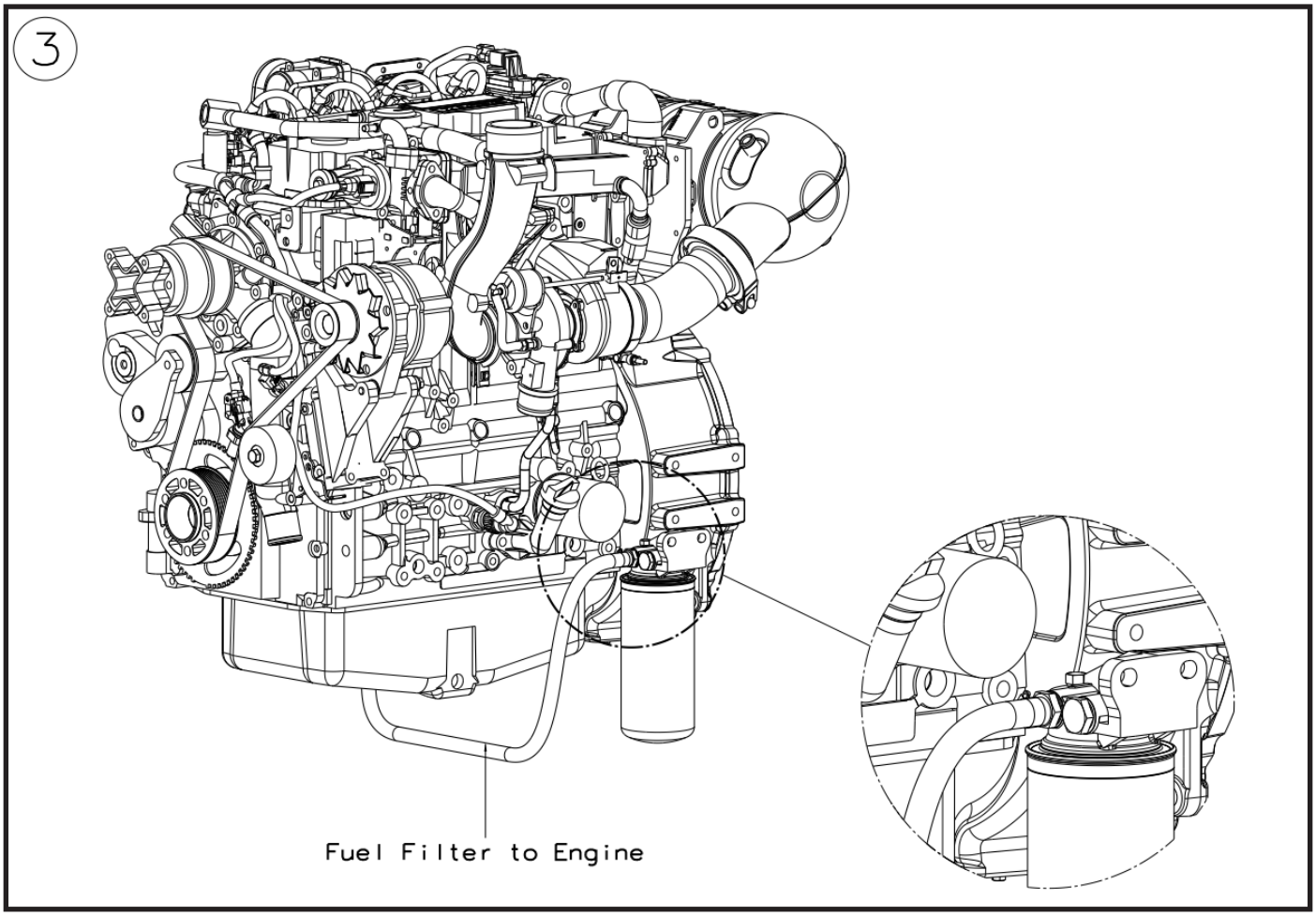
3
Fuel Filter to Engine

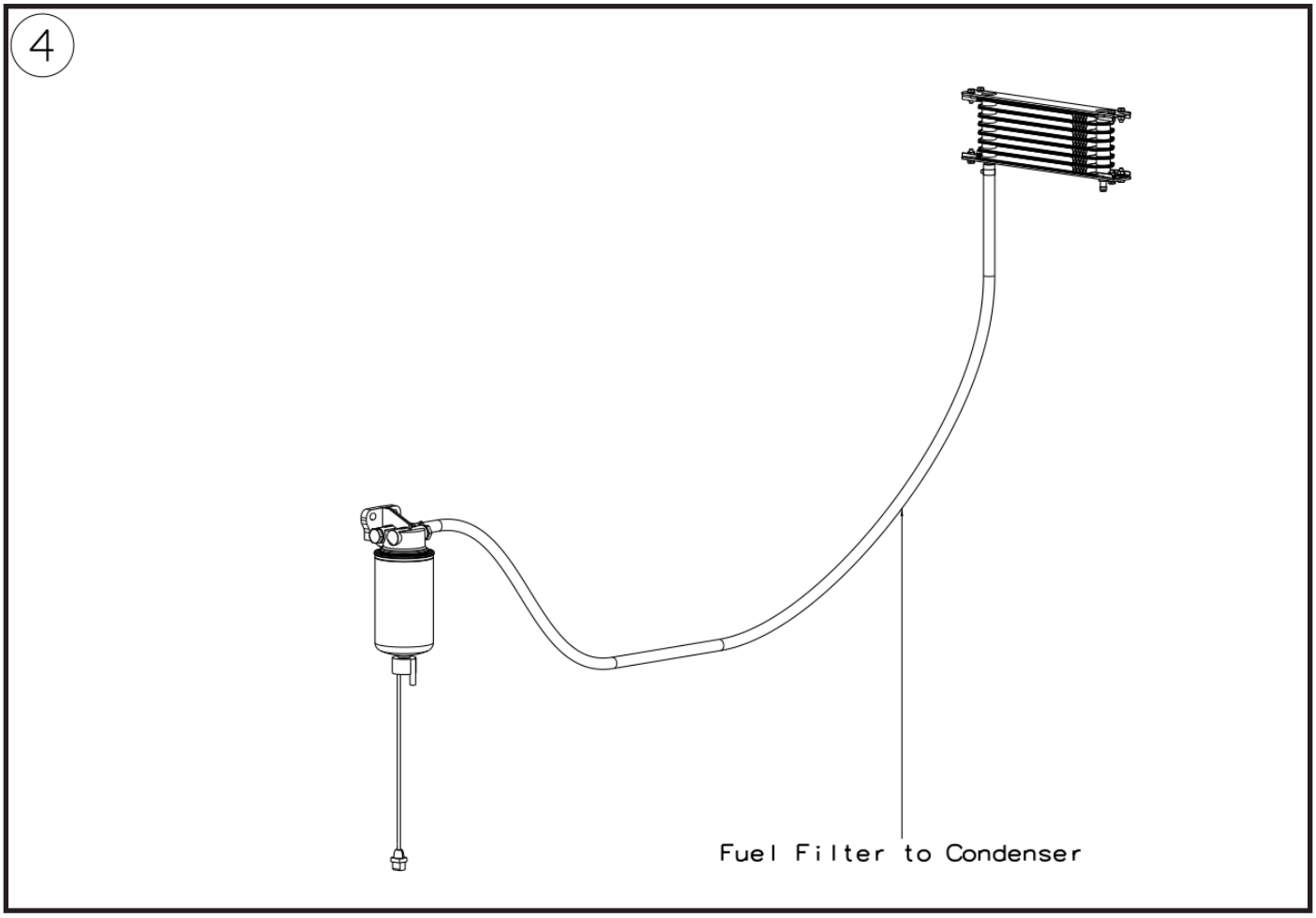

8. Remove the brackets screws (**2**) and remove the Fuel filters (**3**) and Fuel Pump (**4**).

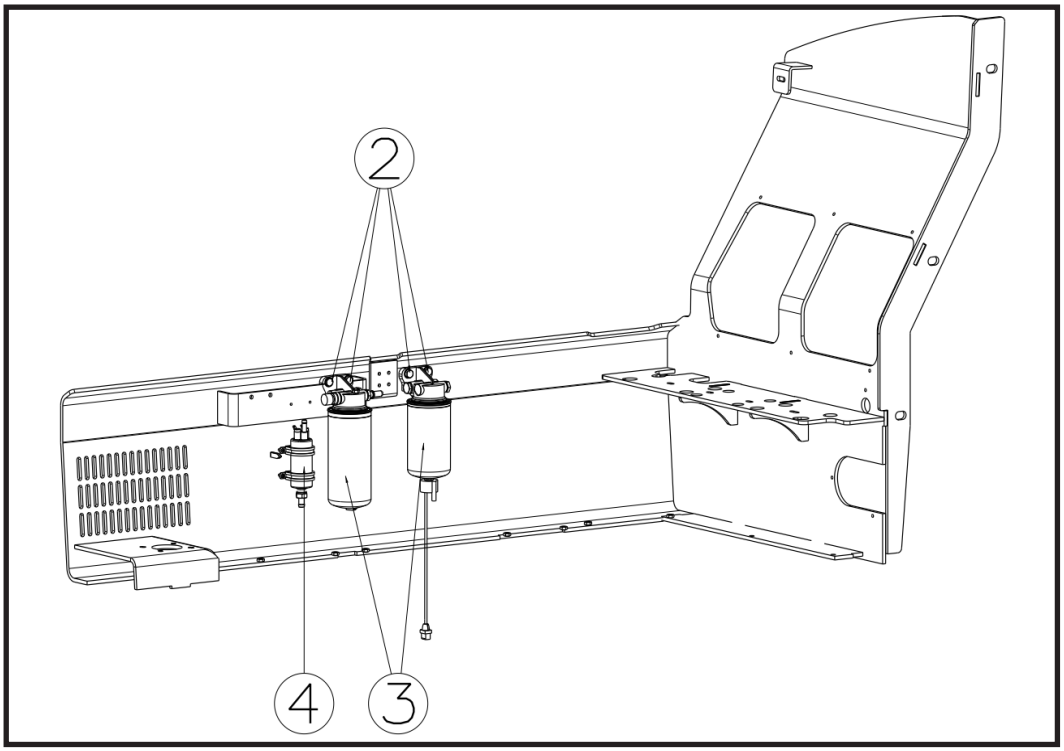

Installation

To install, reverse the removal procedure.

10.9.Engine Exhaust System

Removal

1. Park the machine on firm, level ground, level the machine, fully retract the boom, lower the boom, shift the transmission (N) to NEUTRAL, set the parking brake and turn the engine OFF.
2. For warning purposes during service, place the Do Not Start Label on both the ignition key switch and the steering wheel.
3. Open the engine cover before starting the process. Allow system fluids to cool.
4. Properly disconnect battery(s). *Refer to Section — Battery, for procedure* for detailed instructions.
5. Remove the exhaust bracket (**1**).

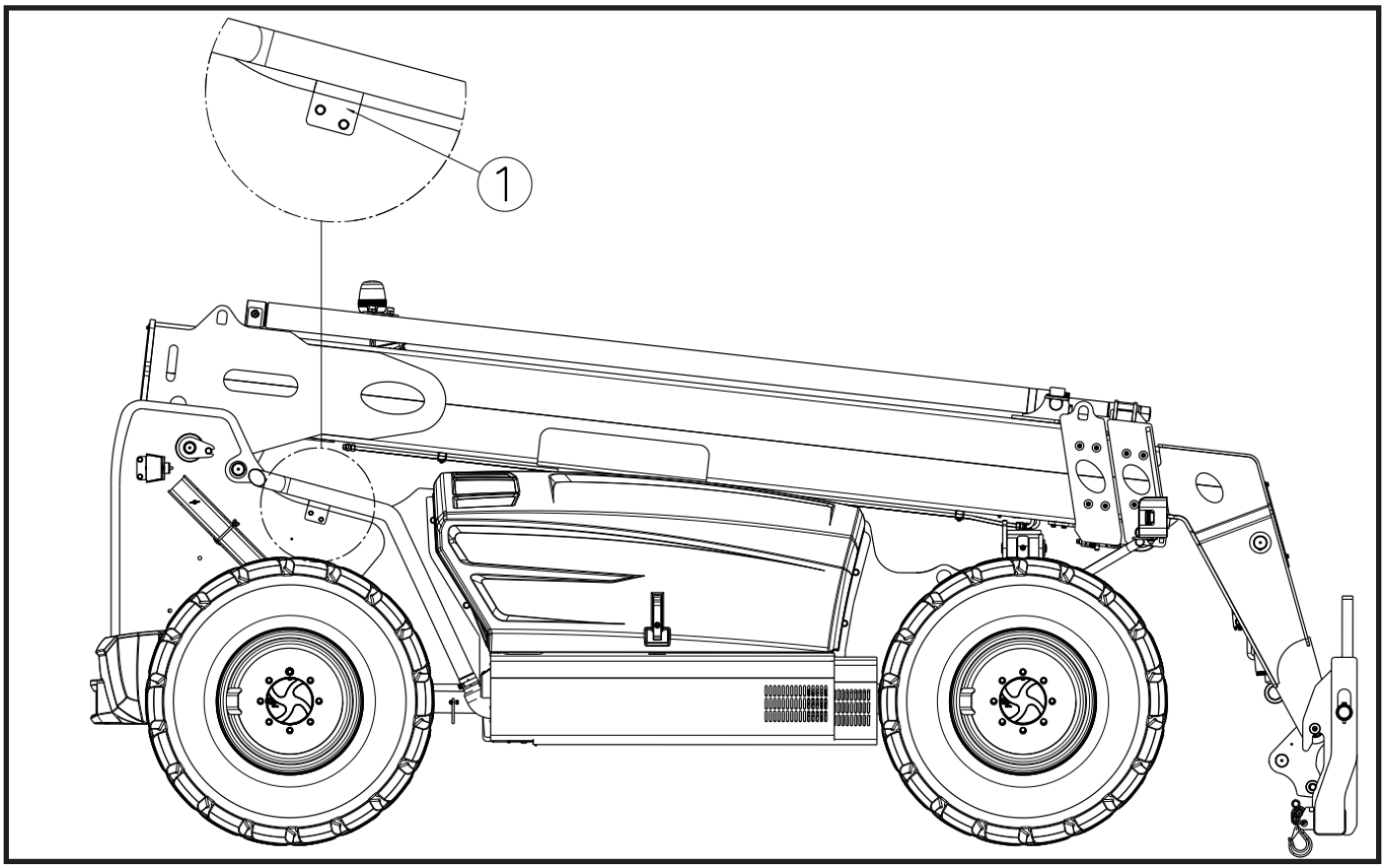

6. Remove SCR input clamp (**2**), SCR mounting clamps (**3**), SCR output clamp (**4**).

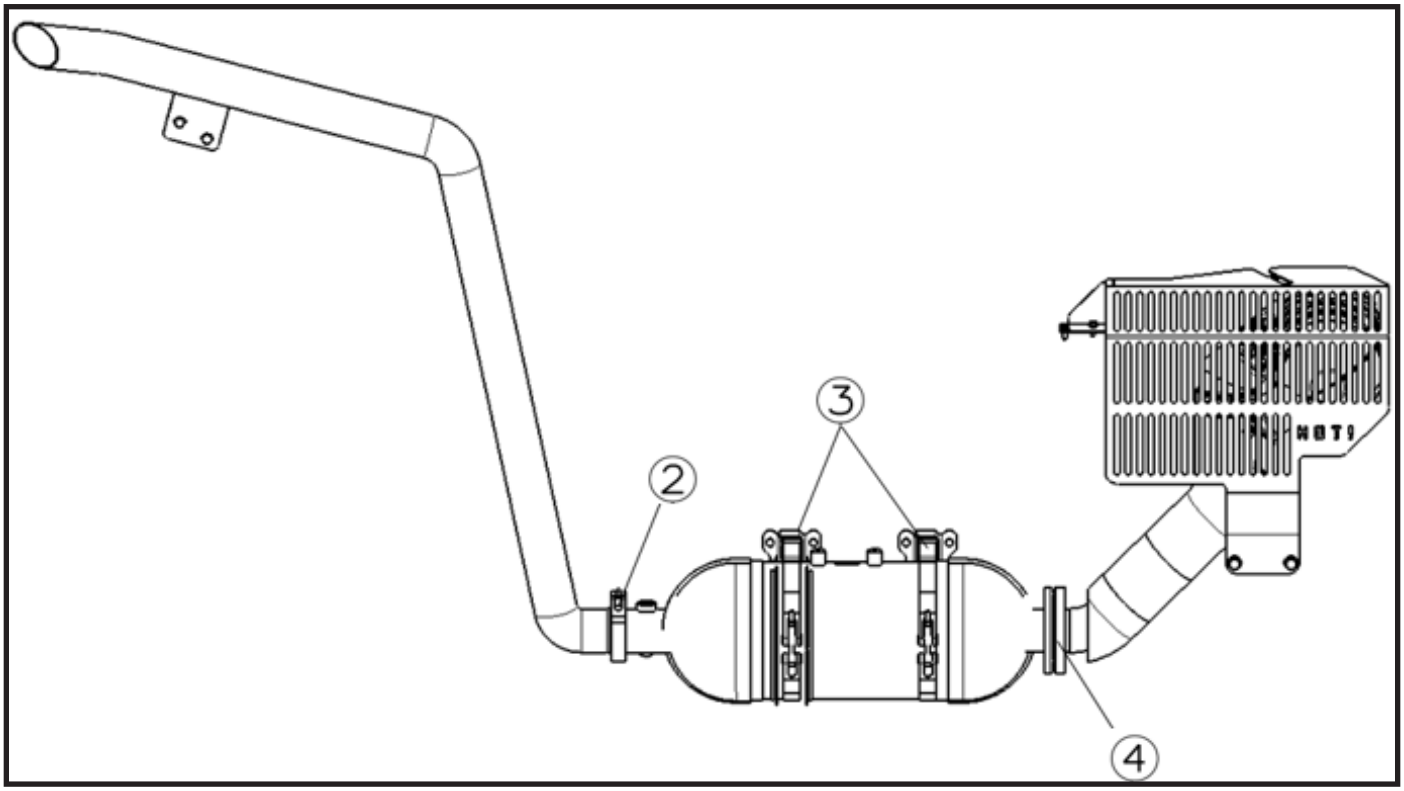

7. Remove the mixing pipe (**5**) and DOC clamps (**6**), (**7**).

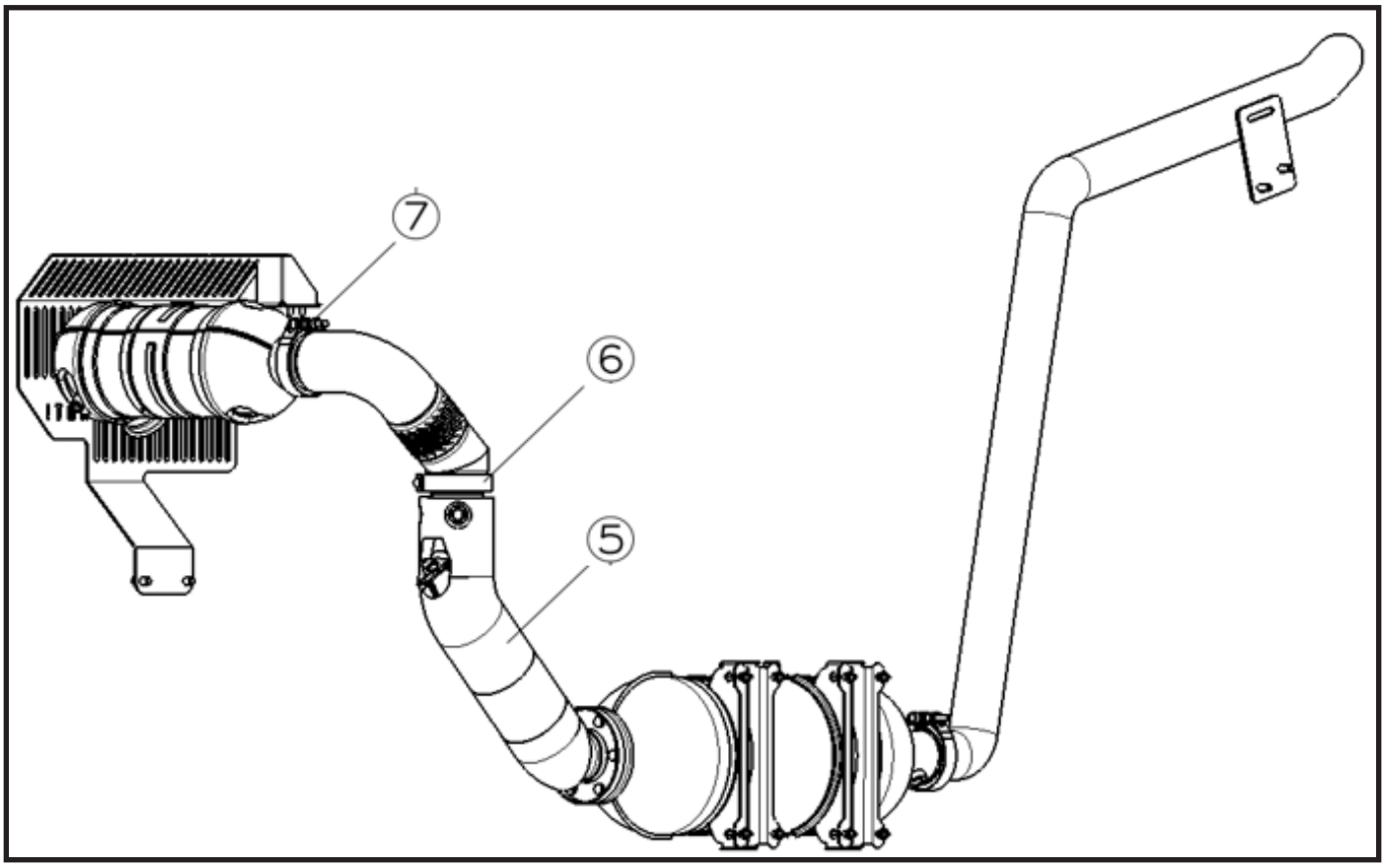

8. Remove the exhaust line.

Installation

To install, reverse the removal procedure.

10.10.Thermostat Replacement

Removal

1. Park the machine on firm, level ground, level the machine, fully retract the boom, lower the boom, shift the transmission (N) to NEUTRAL, set the parking brake and turn the engine OFF.
2. For warning purposes during service, place the Do Not Start Label on both the ignition key switch and the steering wheel.
3. Open the engine cover before starting the process. Allow system fluids to cool.
4. Remove the Expansion Tank. *Refer to Section- Expansion Tank Replacement*.
5. Properly disconnect battery(s). *Refer to Section — Battery, for procedure* for detailed instructions.
6. Drain the engine water. Place a suitable container under the Radiator drain and drain the Engine water.

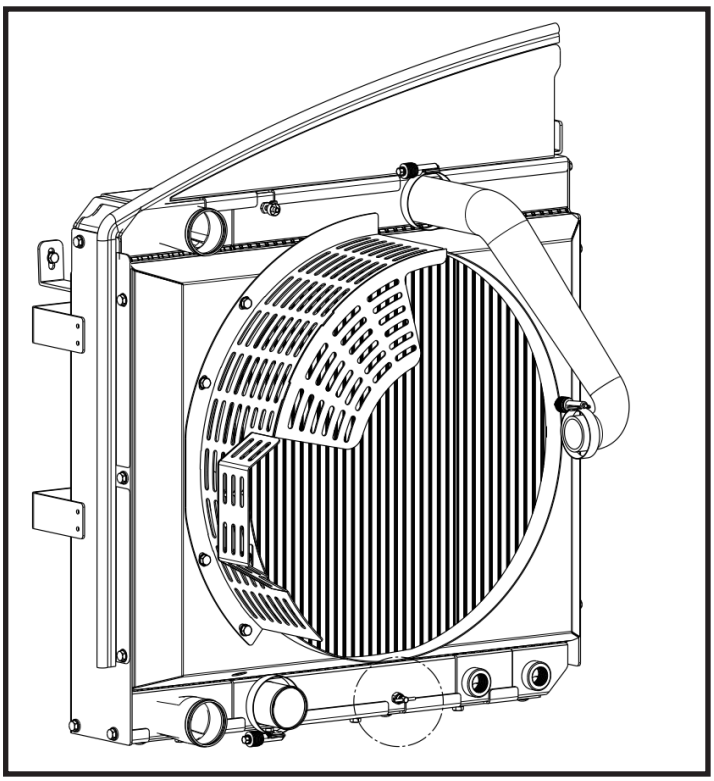

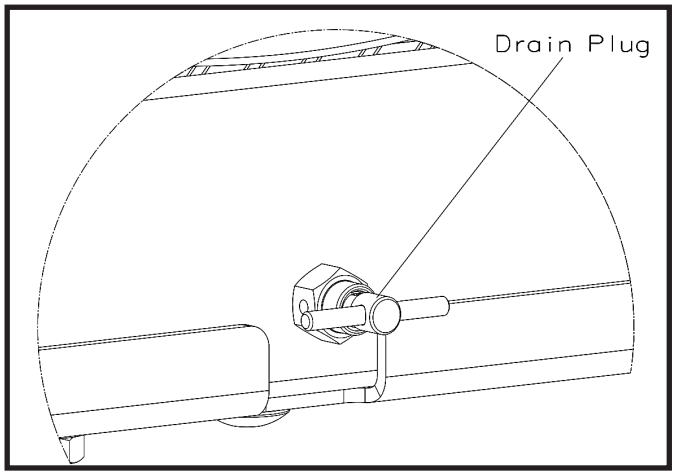

7. Remove the radiator water inlet hose (**1**).

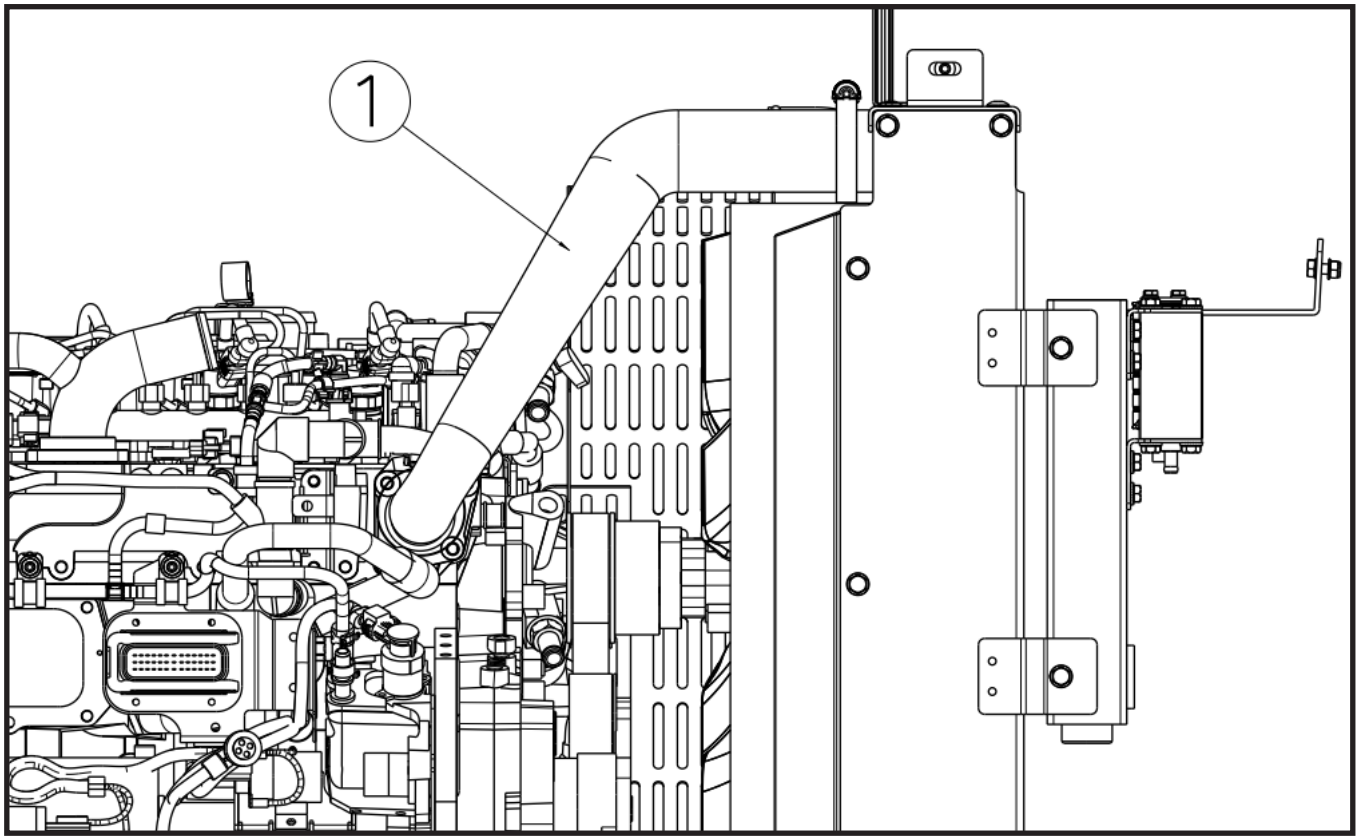

8. Remove the bolts (**2**) that connect the thermostat.

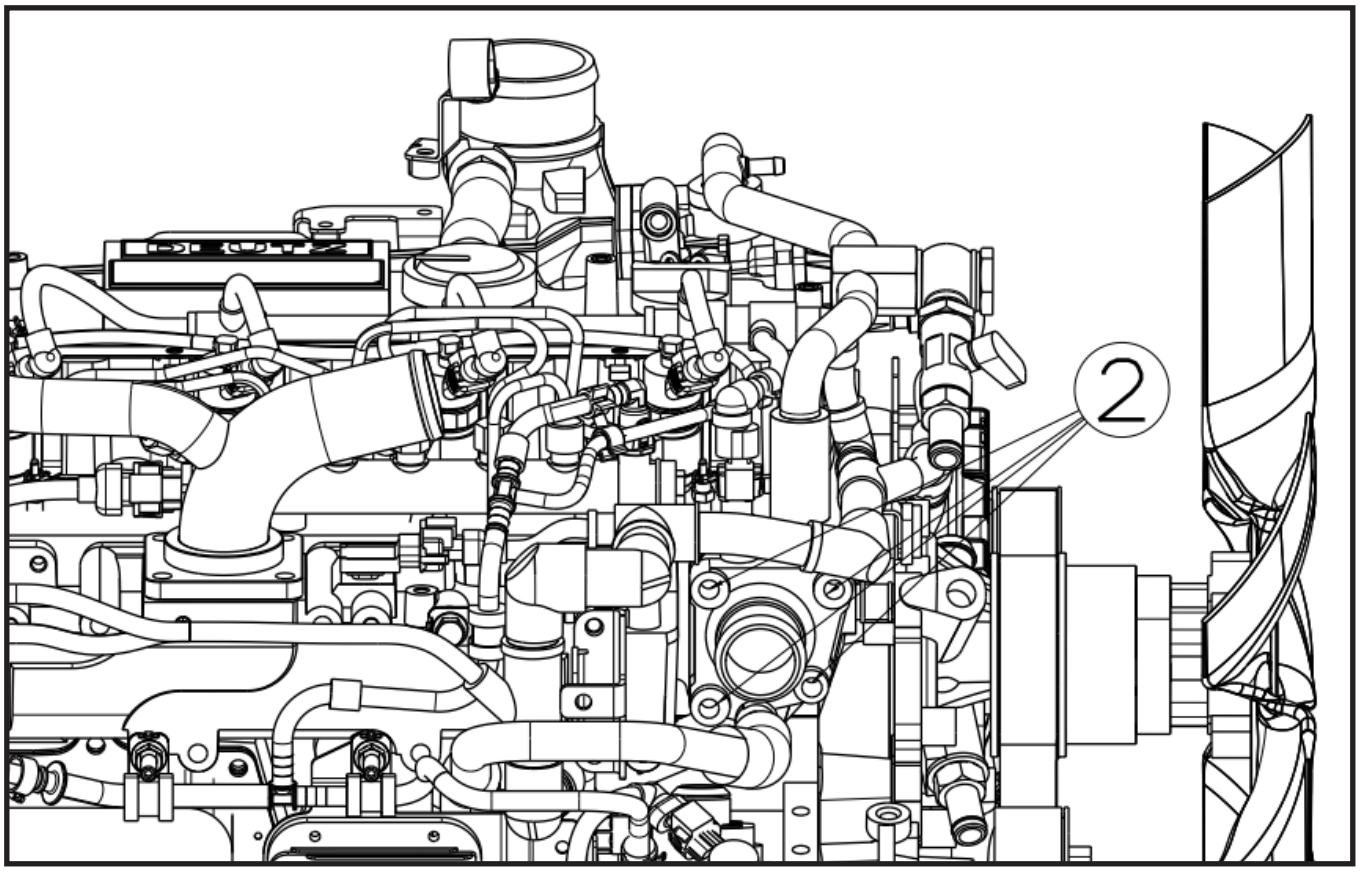

9. Remove the thermostat.

Installation

To install, reverse the removal procedure.

10.11.Fuel Tank Replacement

Removal

1. Park the machine on firm, level ground, level the machine, fully retract the boom, lower the boom, shift the transmission (N) to NEUTRAL, set the parking brake and turn the engine OFF.
2. For warning purposes during service, place the Do Not Start Label on both the ignition key switch and the steering wheel.
3. Open the engine cover before starting the process. Allow system fluids to cool.
4. Properly disconnect battery(s). *Refer to Section — Battery, for procedure* for detailed instructions.
5. Drain the fuel from the fuel tank properly,

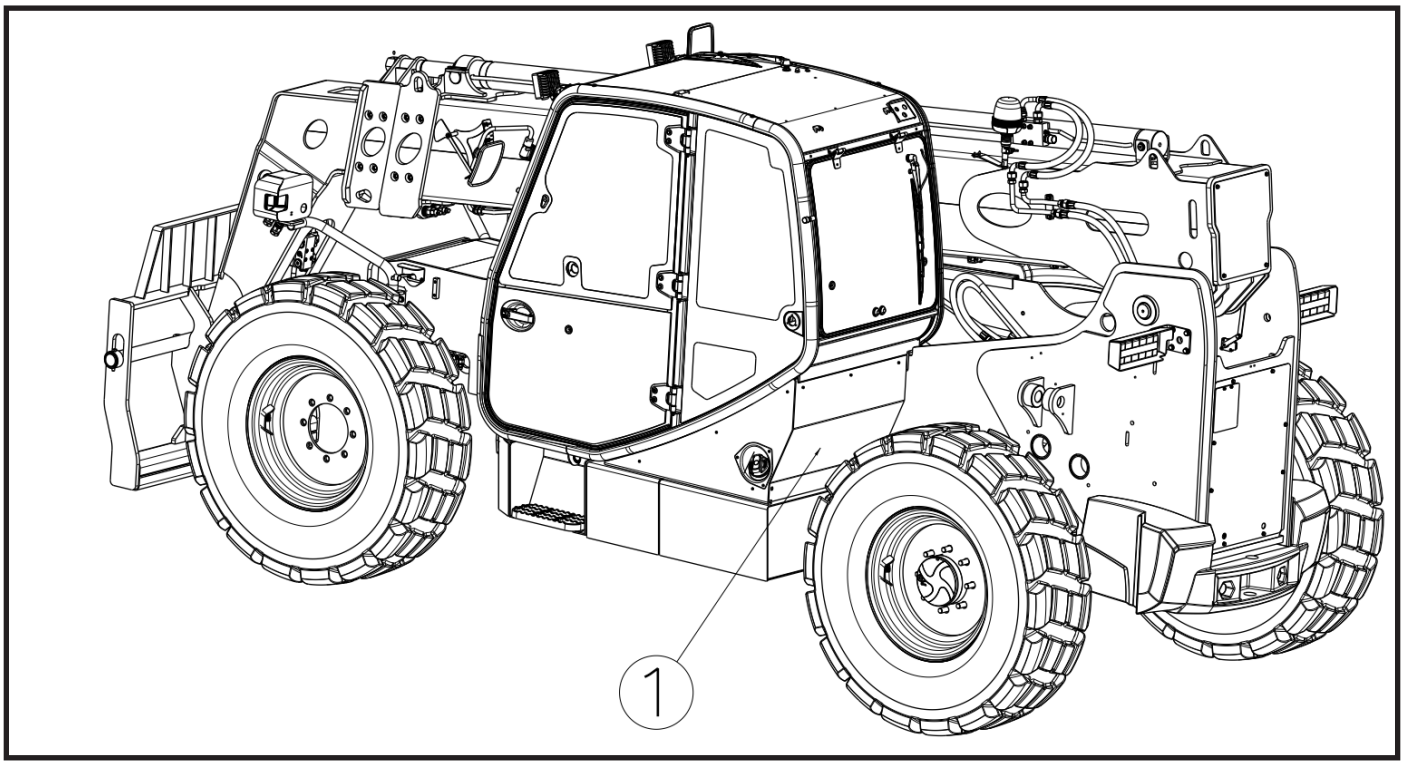

6. Remove the cab rear closure (**1**),
7. Remove the filler neck clamps and the fuel pipe cap (**2**), (**3**).

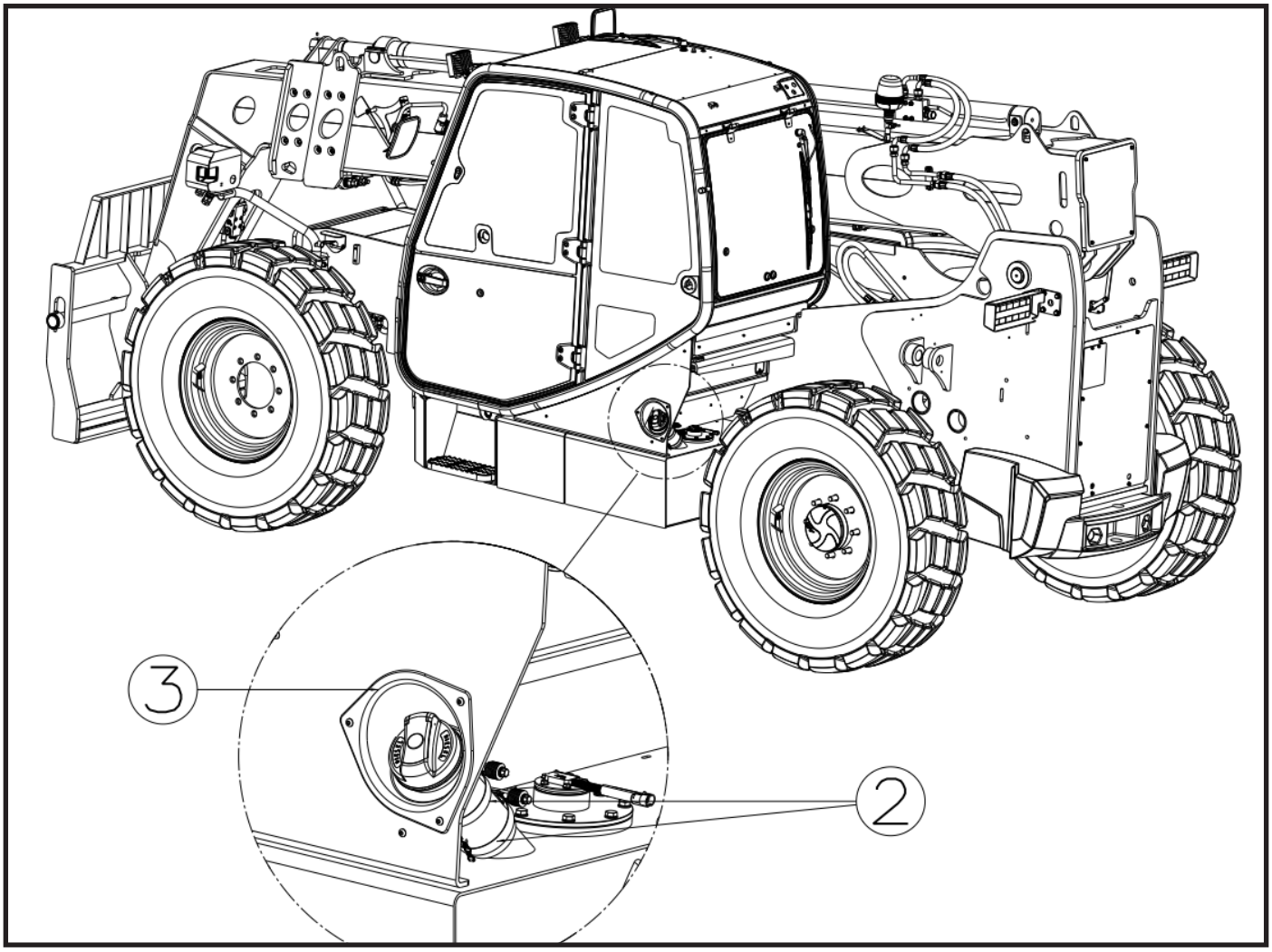

8. Remove the cab side closure sheet. (**4**),

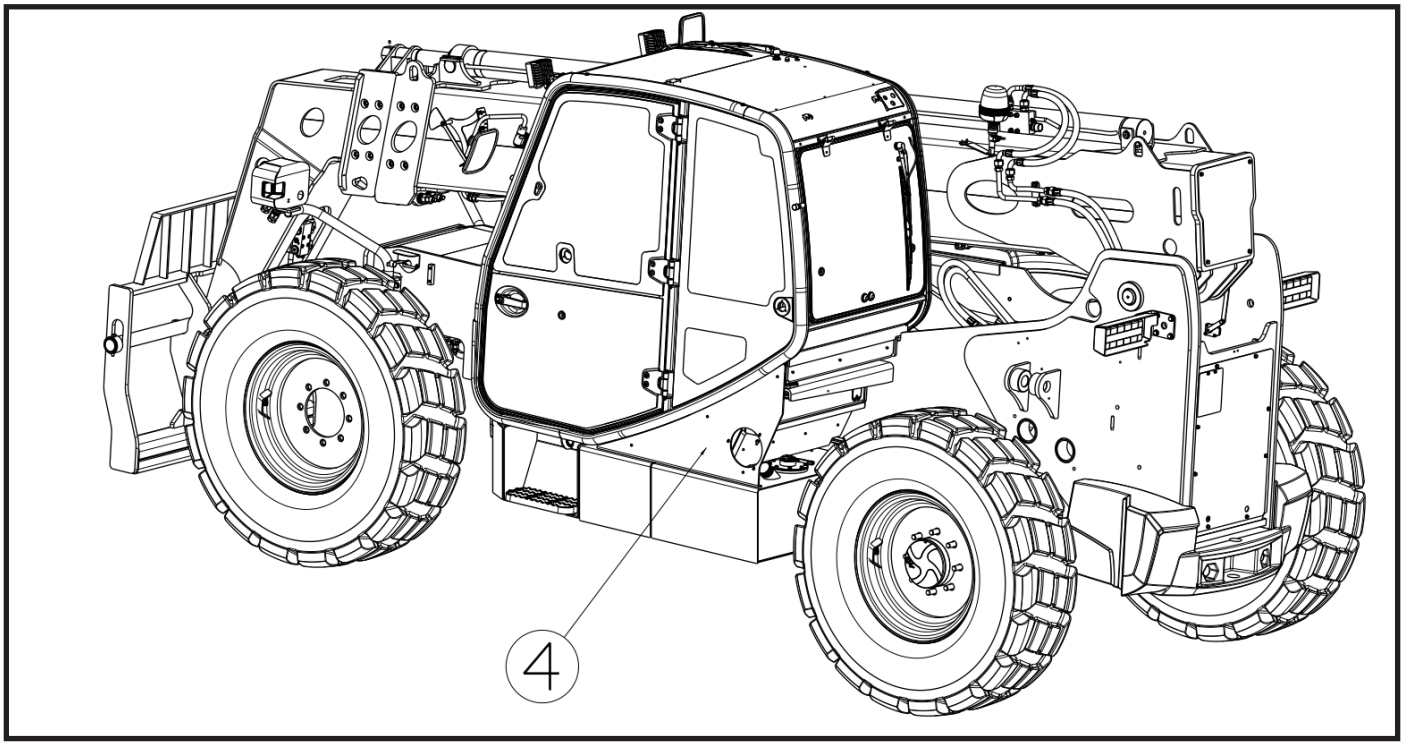

9. Remove the hydraulic and fuel tank connection bracket. (**5**),

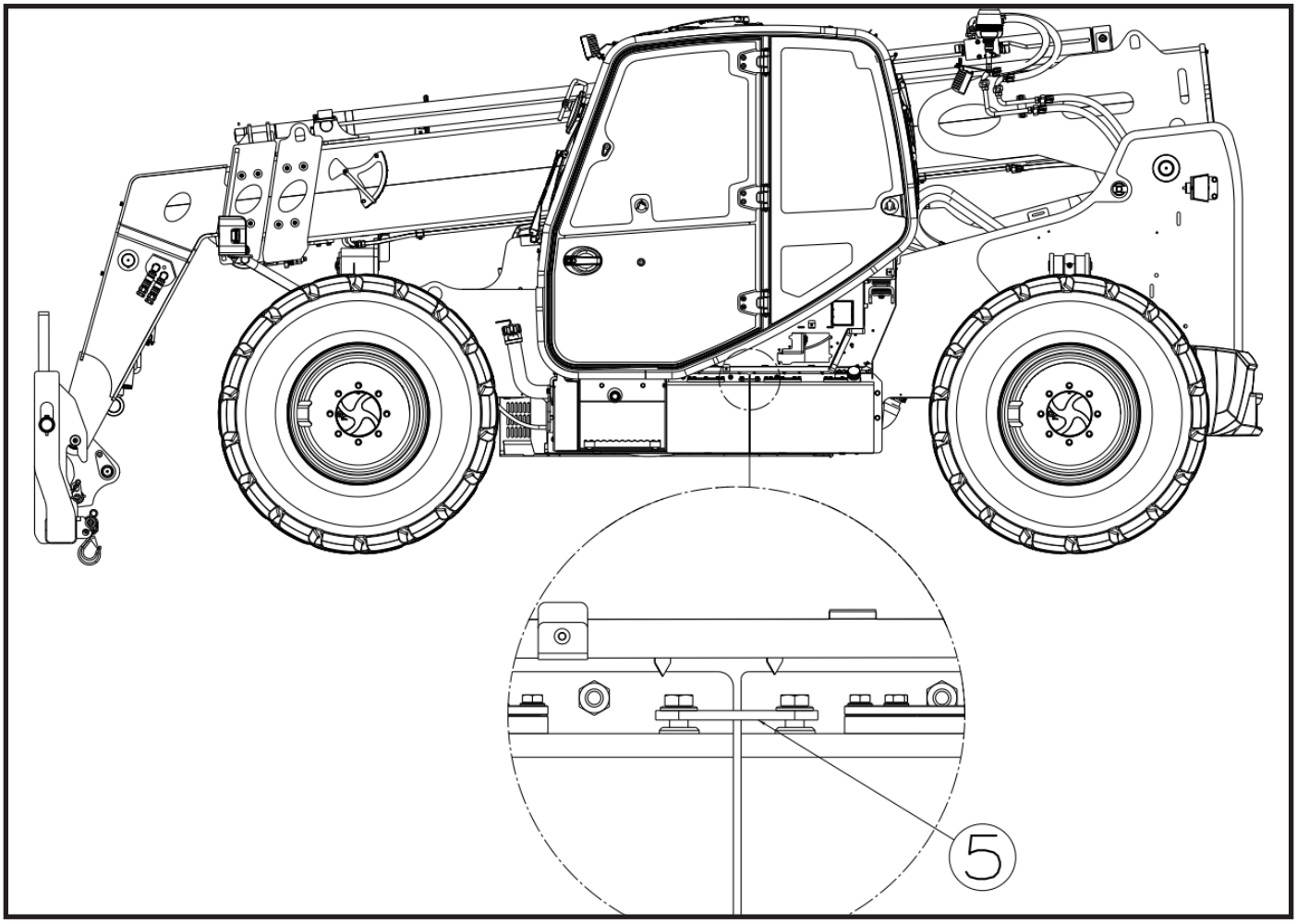

10. Remove the chassis bottom plate (**6**).

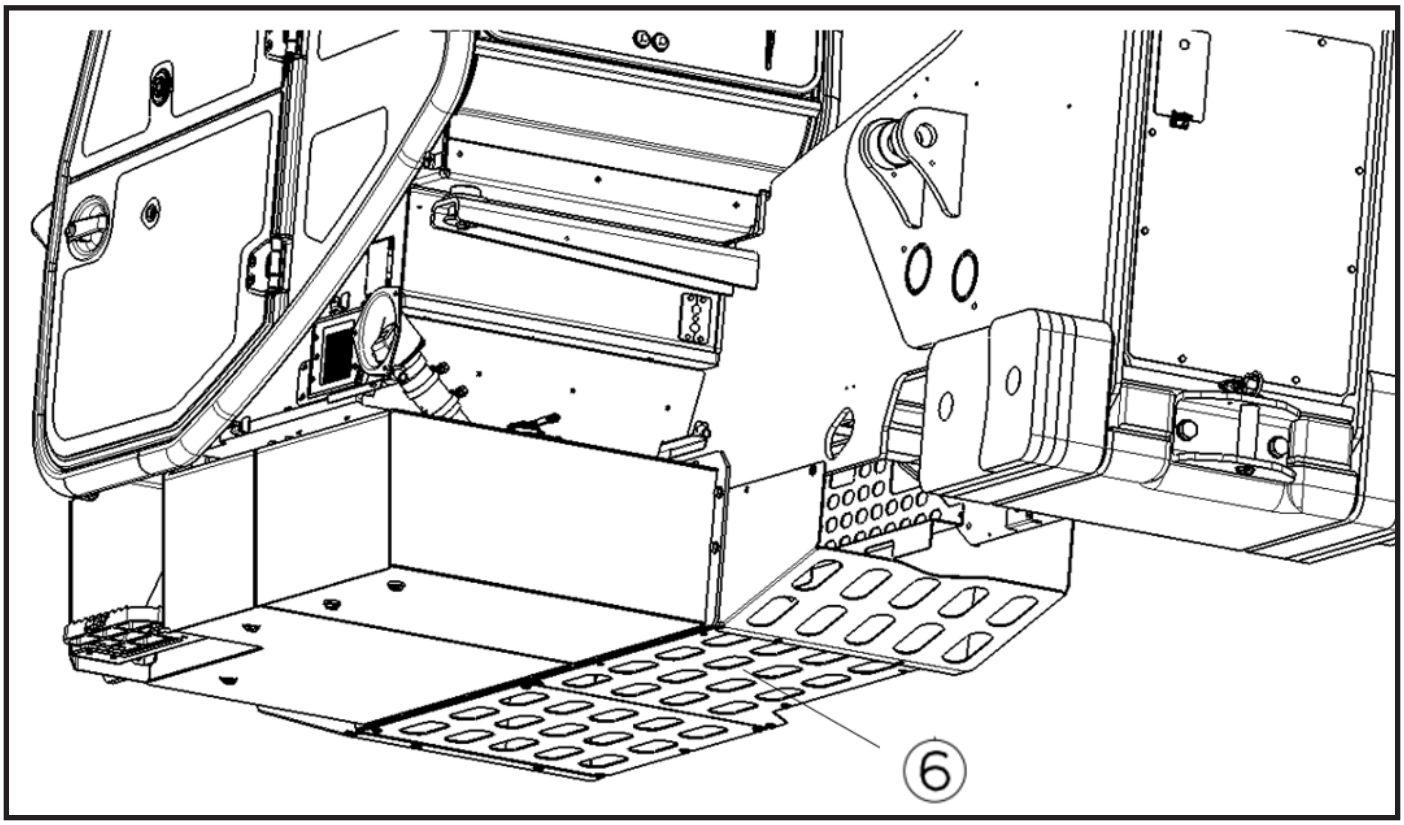

11. Disconnect the fuel hoses (**7**).

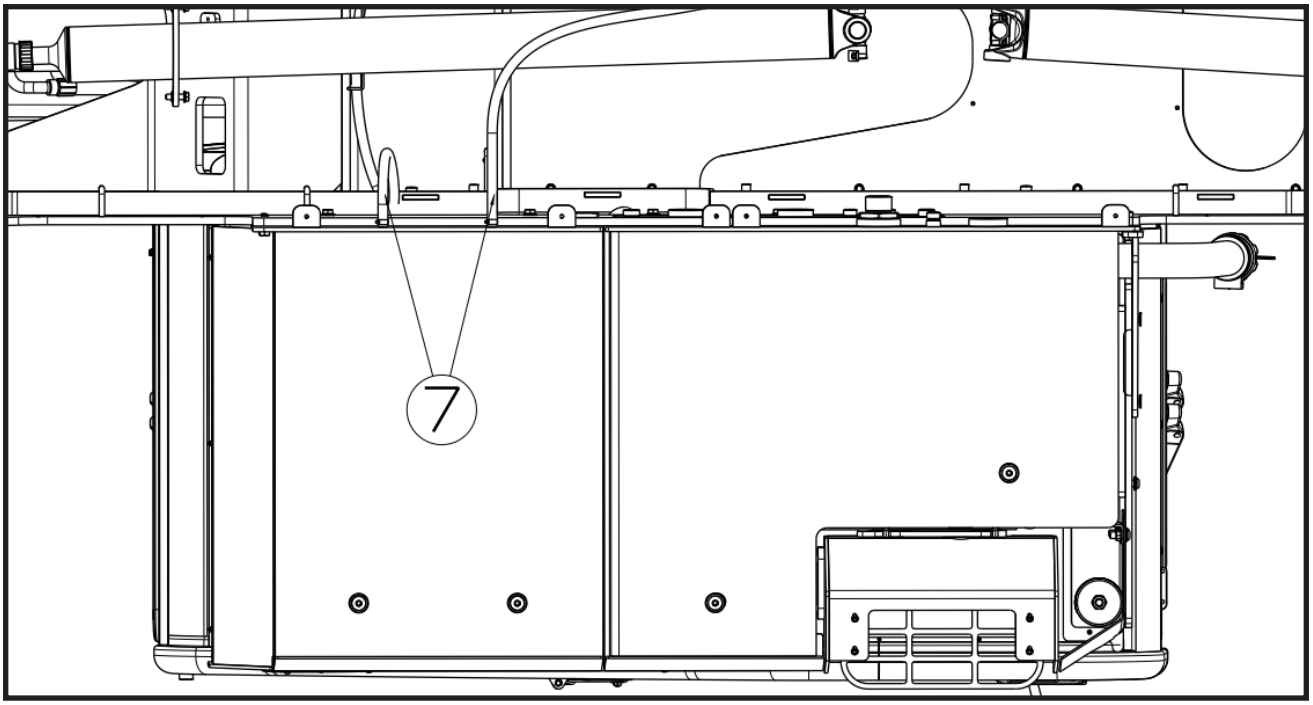

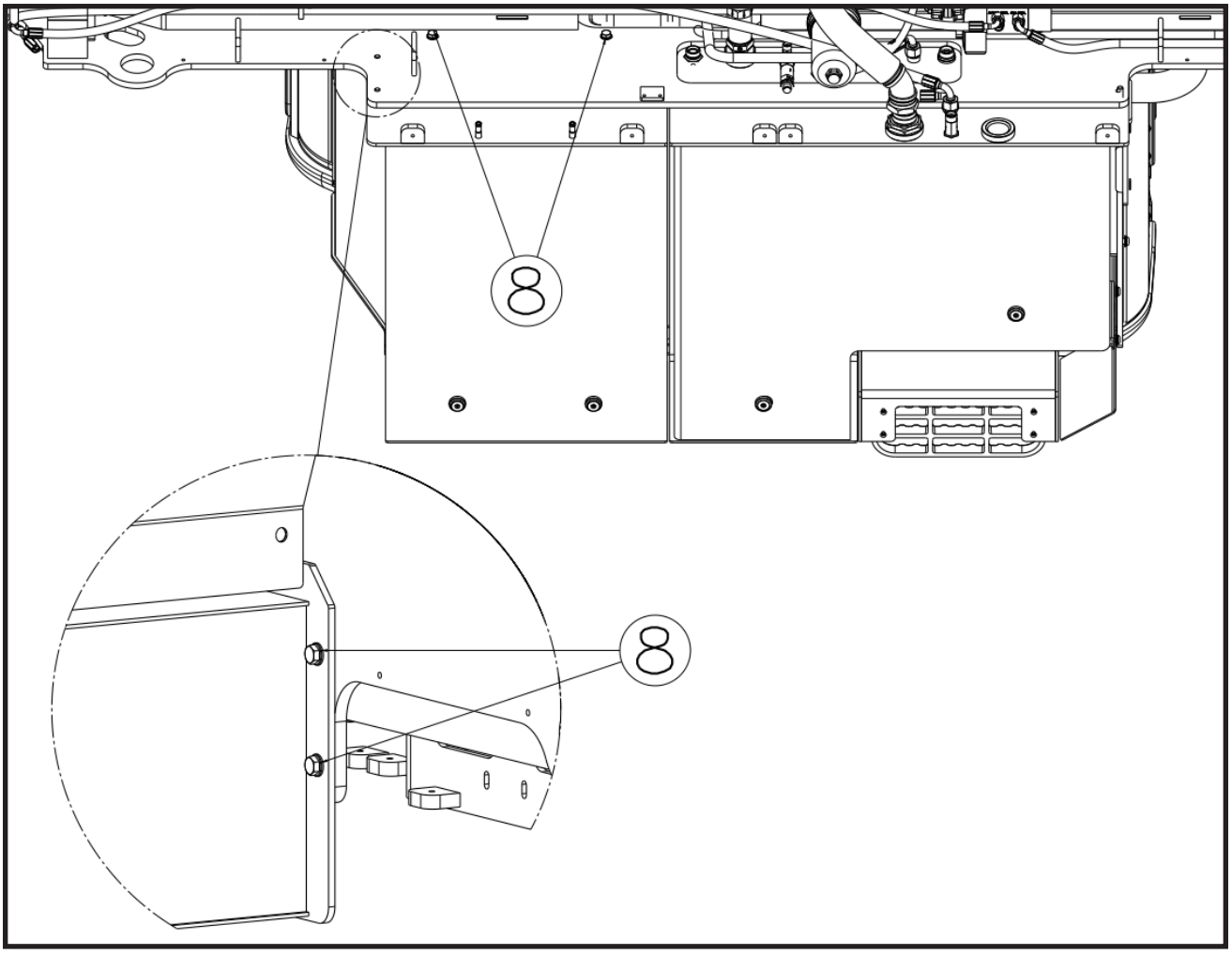

12. Unscrew the bolts on the chassis side of the tank (**8**),
13. Remove the fuel tank.

Installation

To install, reverse the removal procedure.

10.12.Starter Replacement

Removal

1. Park the machine on firm, level ground, level the machine, fully retract the boom, lower the boom, shift the transmission (N) to NEUTRAL, set the parking brake and turn the engine OFF.
2. For warning purposes during service, place the Do Not Start Label on both the ignition key switch and the steering wheel.
3. Open the engine cover before starting the process. Allow system fluids to cool.
4. Properly disconnect battery(s). *Refer to Section — Battery, for procedure* for detailed instructions.
5. Remove belly pans (**1**).

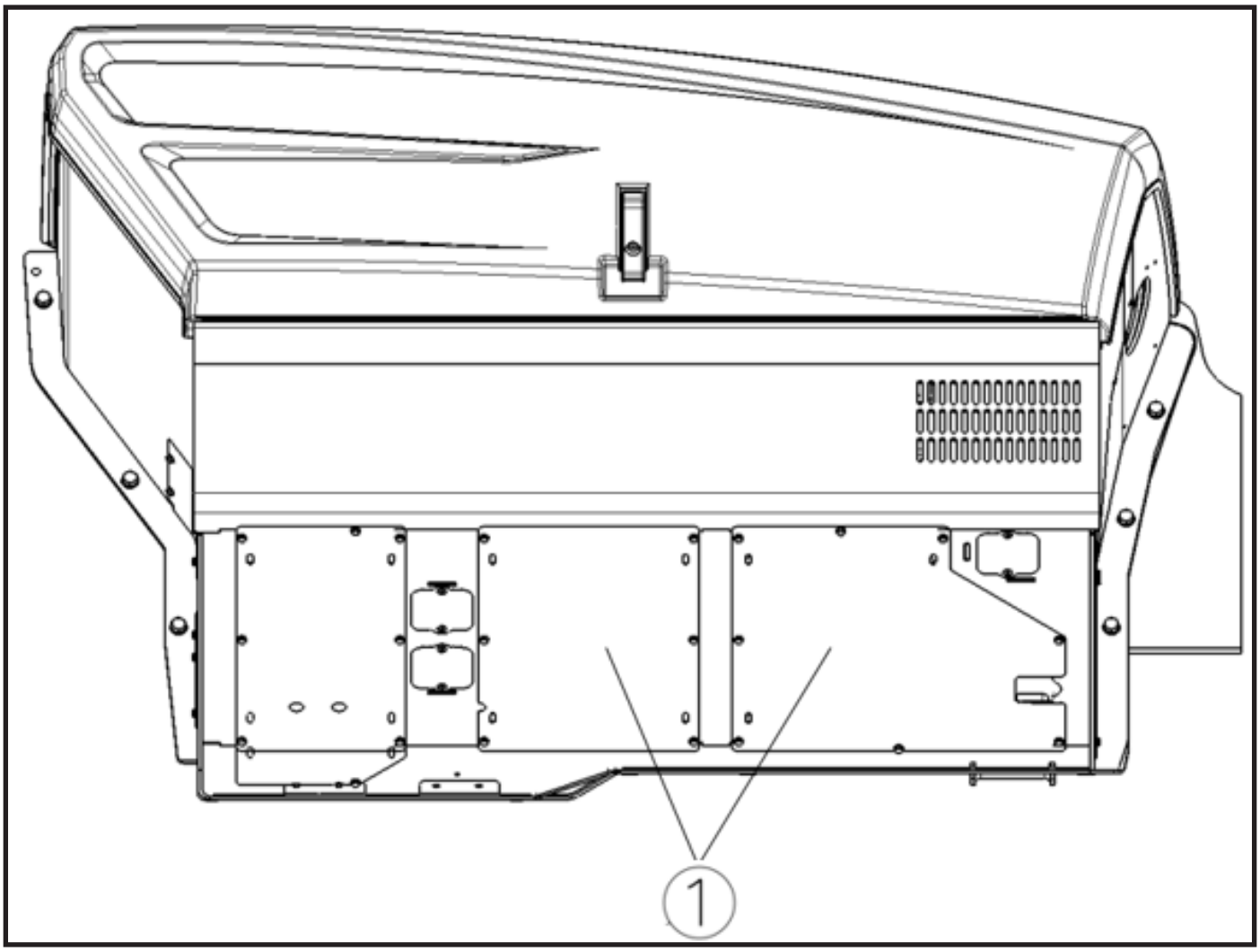

6. Remove the mixing pipe (**2**) and DOC clamps (**3**), (**4**).

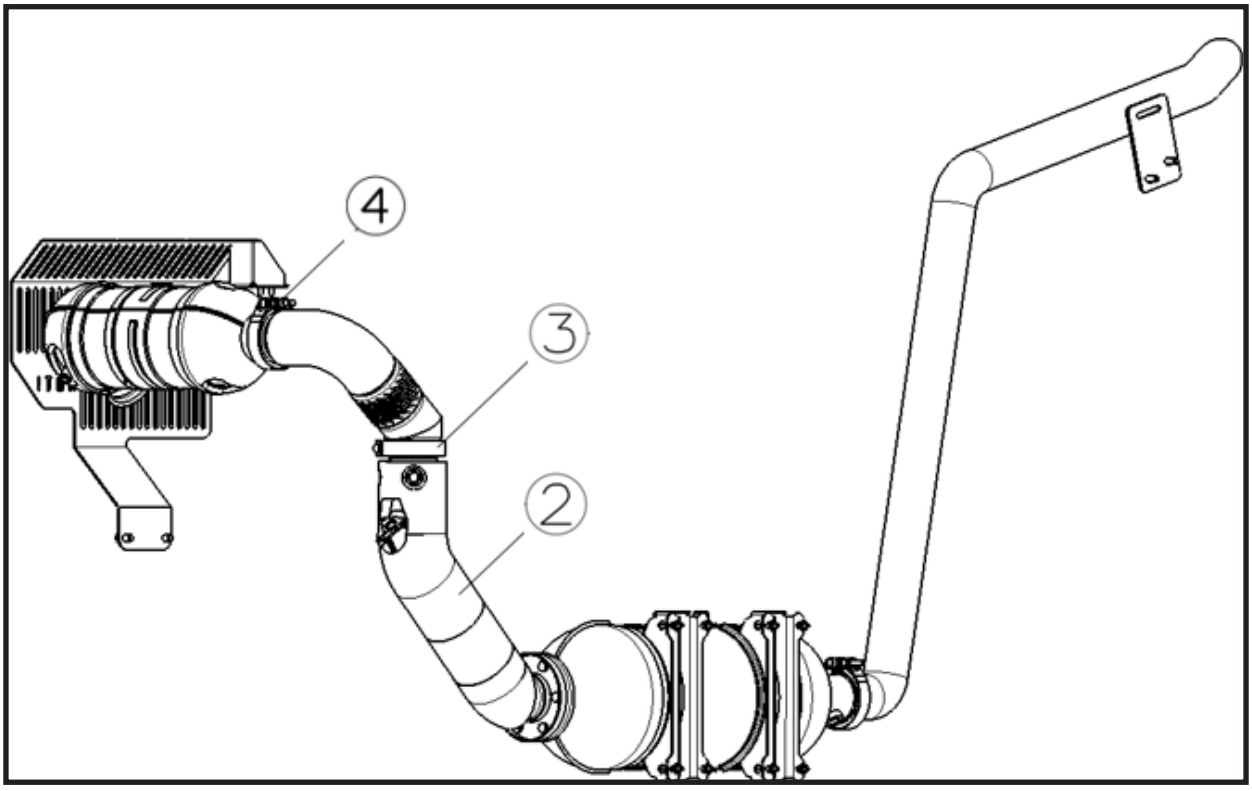

7. Disconnect starter connection cables (**5**).
8. Remove 3 starter connection bolts (**6**).

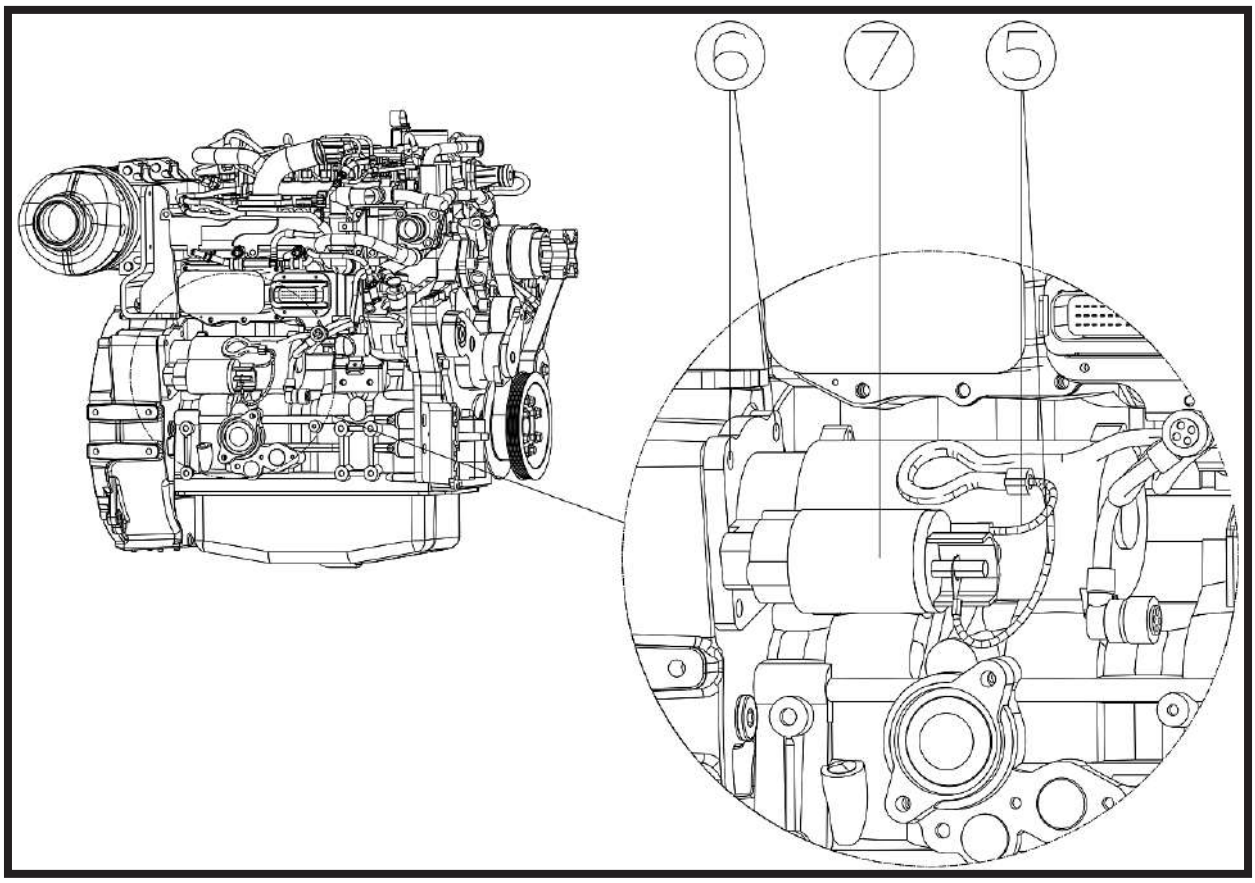

9. Remove the starter (**7**).

Installation

To install, reverse the removal procedure.

10.13.Alternator Replacement

Removal

1. Park the machine on firm, level ground, level the machine, fully retract the boom, lower the boom, shift the transmission (N) to NEUTRAL, set the parking brake and turn the engine OFF.
2. For warning purposes during service, place the Do Not Start Label on both the ignition key switch and the steering wheel.
3. Open the engine cover before starting the process. Allow system fluids to cool.
4. Properly disconnect battery(s). *Refer to Section — Battery, for procedure* for detailed instructions.
5. Remove the blade (fan) protection cover sheet (**1**),

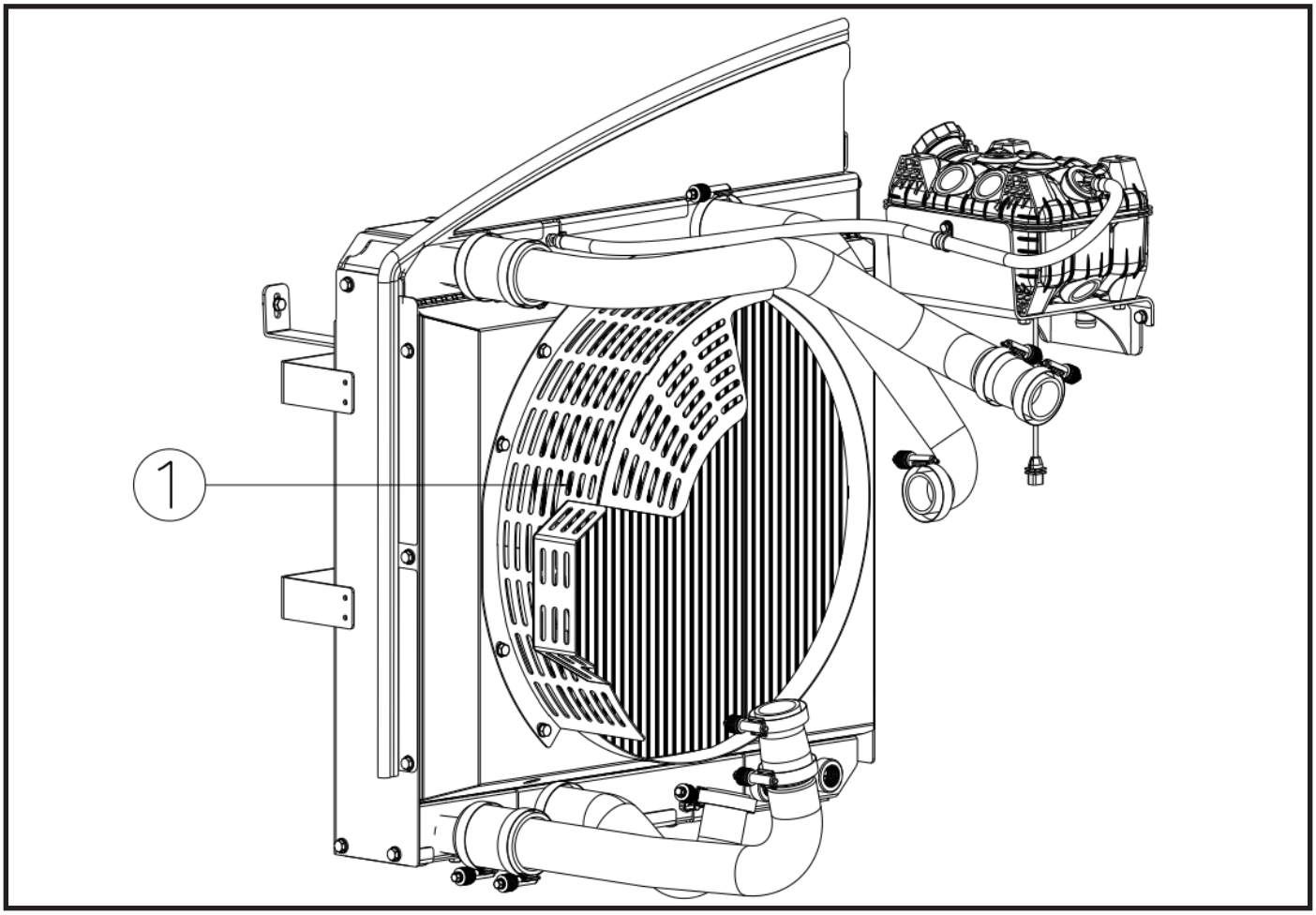

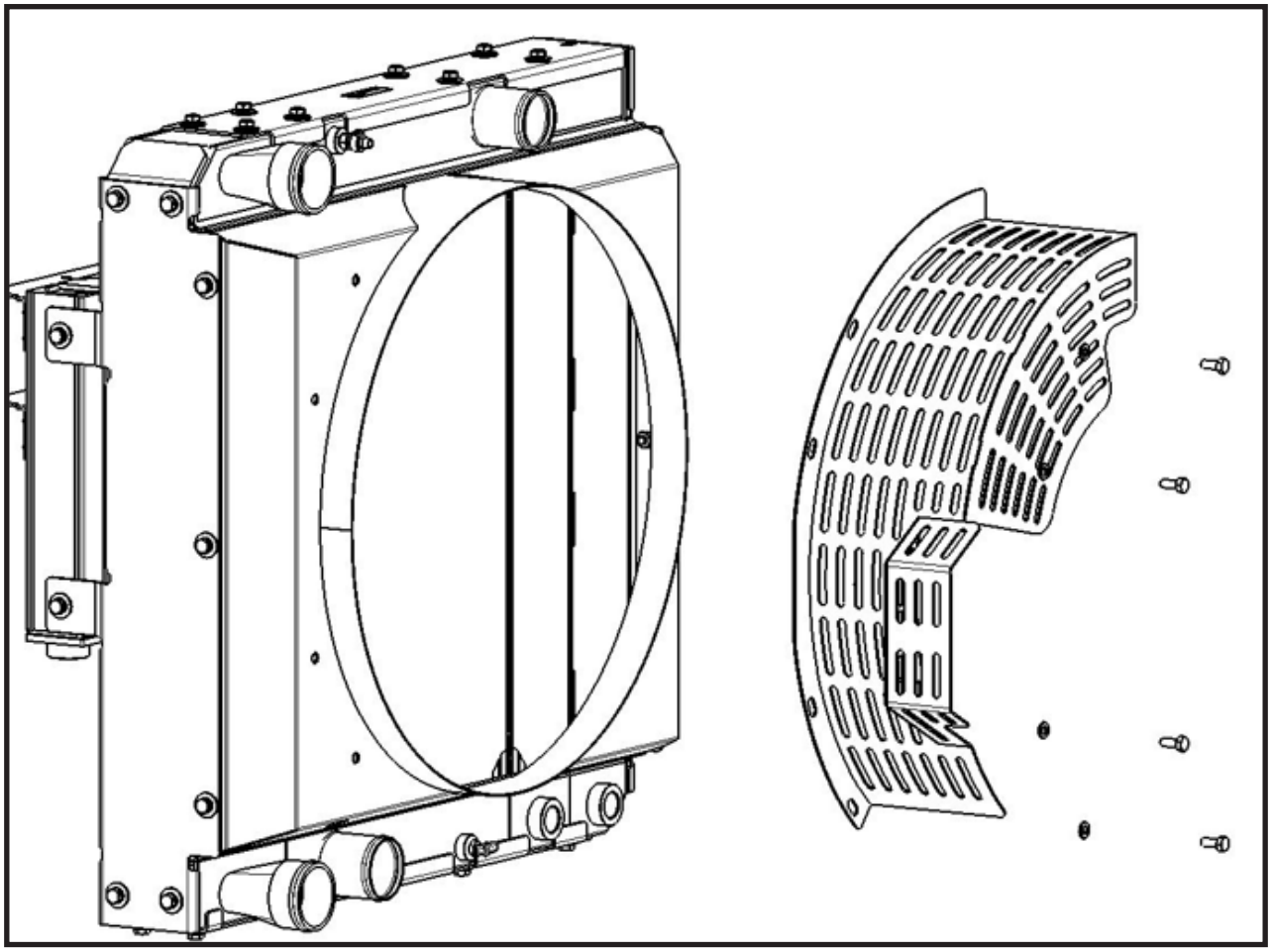

6. Disengage the alternator belt (**2**). Loosen the adjusting nut to release the belt.

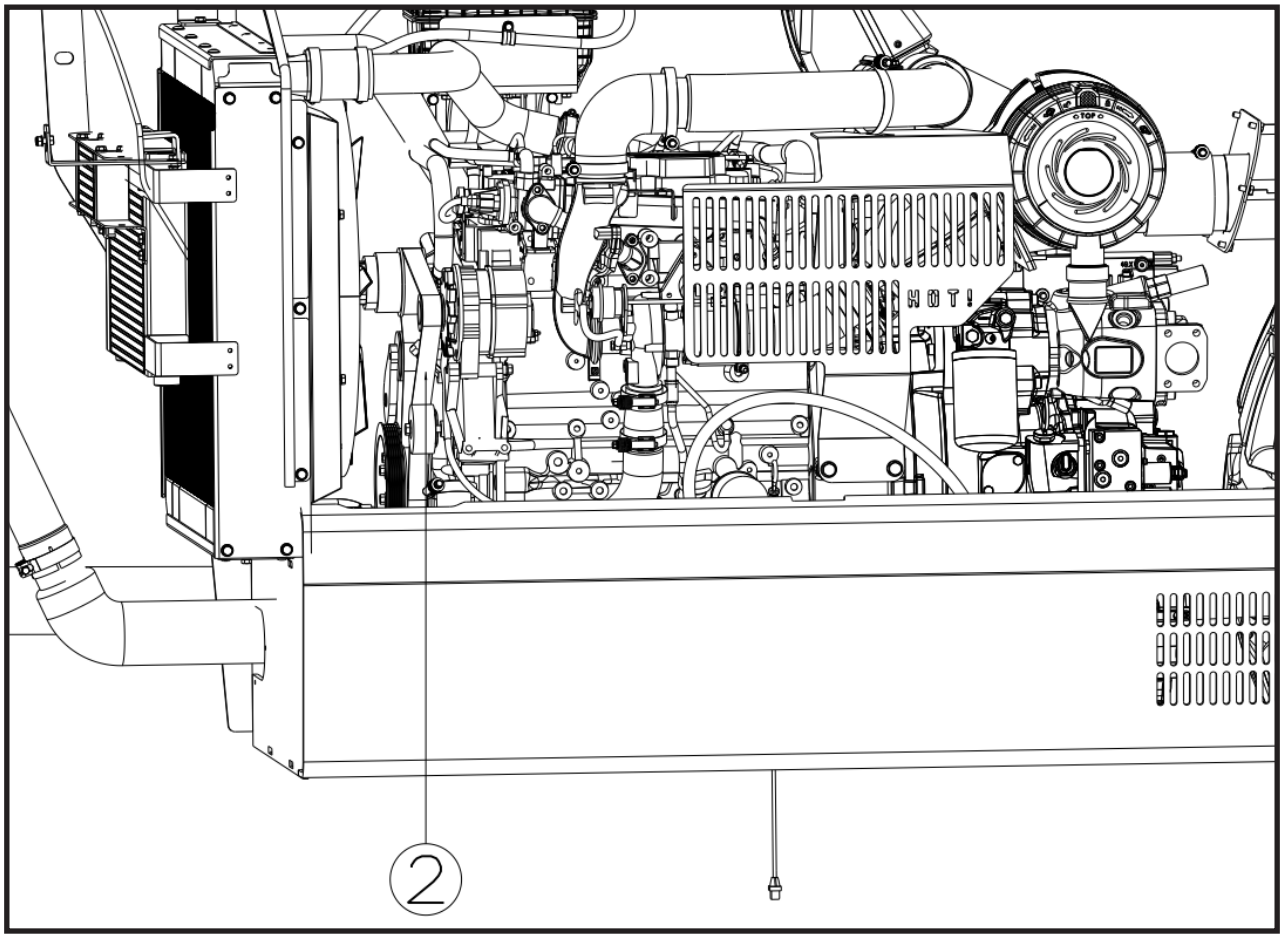

7. Disconnect the connection cables.
8. Remove the bolts (**3**).

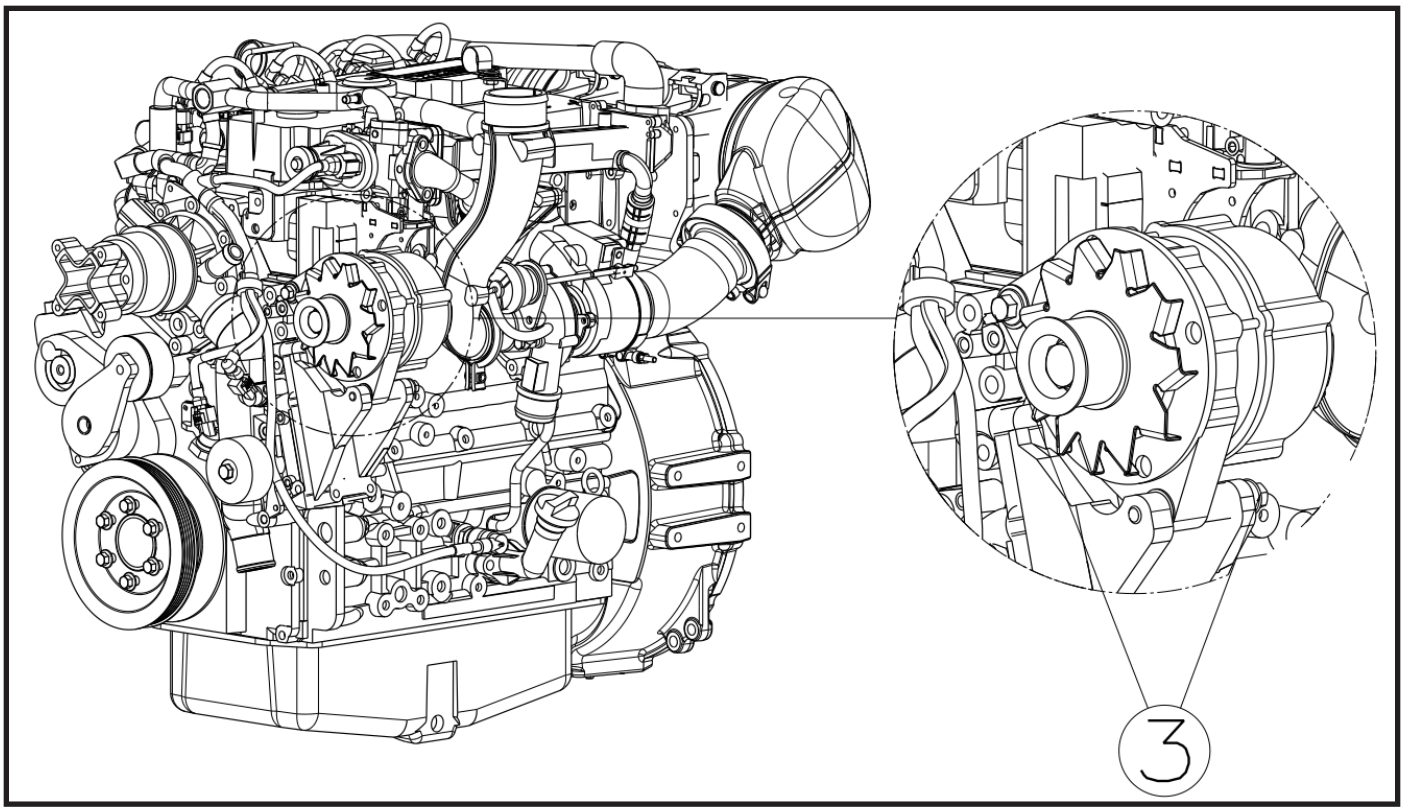

9. Remove the alternator.

Installation

To install, reverse the removal procedure.

10.14.Water Pump Replacement

Removal

1. Park the machine on firm, level ground, level the machine, fully retract the boom, lower the boom, shift the transmission (N) to NEUTRAL, set the parking brake and turn the engine OFF.
2. For warning purposes during service, place the Do Not Start Label on both the ignition key switch and the steering wheel.
3. Open the engine cover before starting the process. Allow system fluids to cool.
4. Properly disconnect battery(s). *Refer to Section — Battery, for procedure* for detailed instructions.
5. Place a suitable container under the Radiator drain and drain the water.

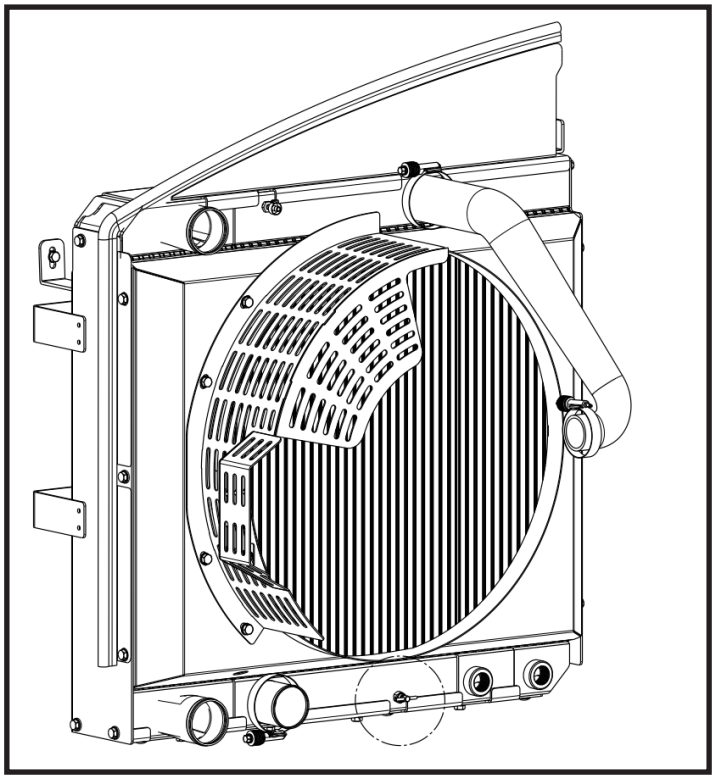

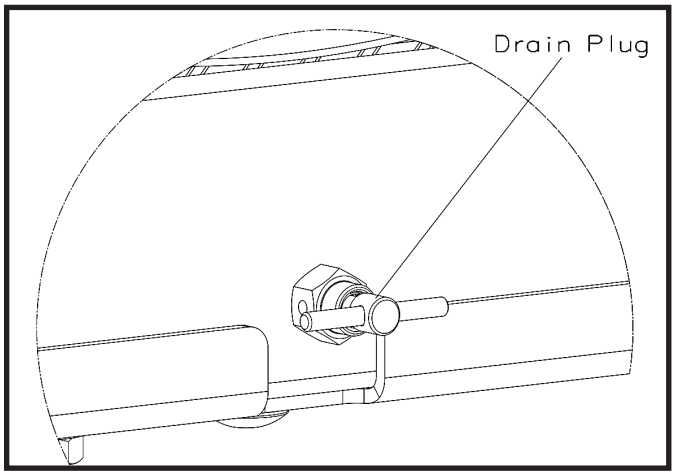

6. Remove the fan protection cover (**1**).

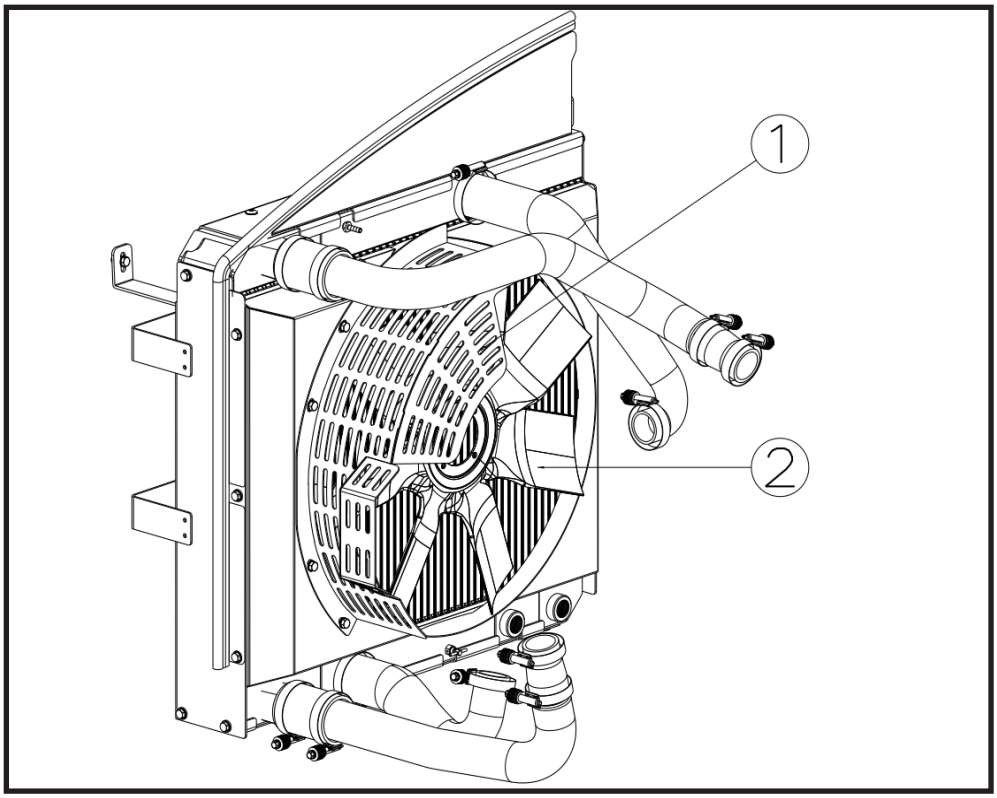

7. Remove the fan (**2**)
8. Remove the alternator belt (**3**).

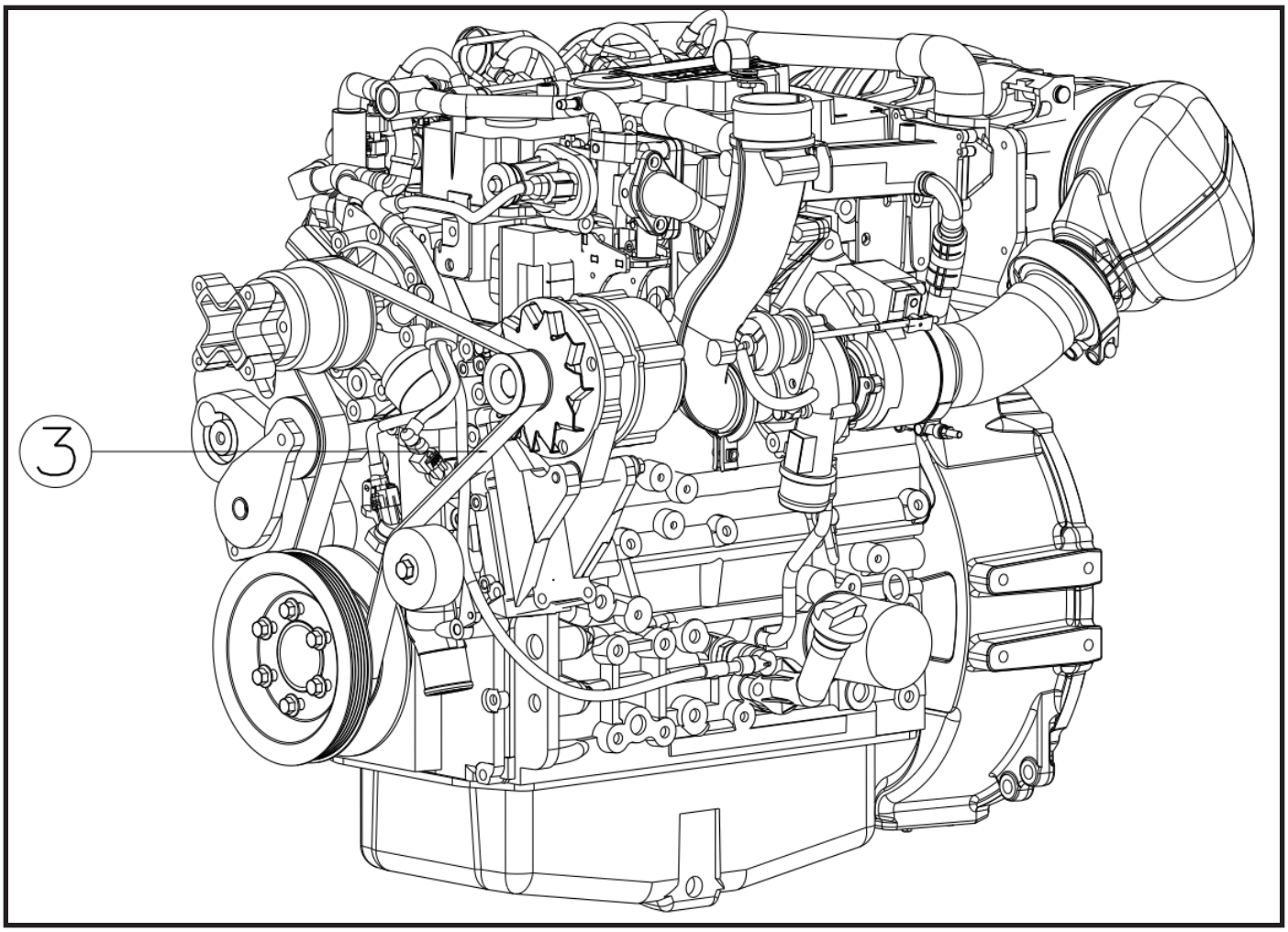

9. Remove the Radiator hose (**4**), the pipe between the radiator hose and the water pump (**5**), water pump by unscrewing the bolts (**6**).

Installation

To install, reverse the removal procedure.

10.15.Hydraulic Tank Replacement

Removal

1. Park the machine on firm, level ground, level the machine, fully retract the boom, lower the boom, shift the transmission (N) to NEUTRAL, set the parking brake and turn the engine OFF.
2. For warning purposes during service, place the Do Not Start Label on both the ignition key switch and the steering wheel.
3. Open the engine cover before starting the process. Allow system fluids to cool.
4. Properly disconnect battery(s). Refer to Section — Battery, for procedure for detailed instructions.
5. Place a suitable receptacle under Hydraulic Tank. Drain the hydraulic by removing the plug at the bottom of the tank.
6. Unscrew the step connection bolts (8 pcs.) (**1**).

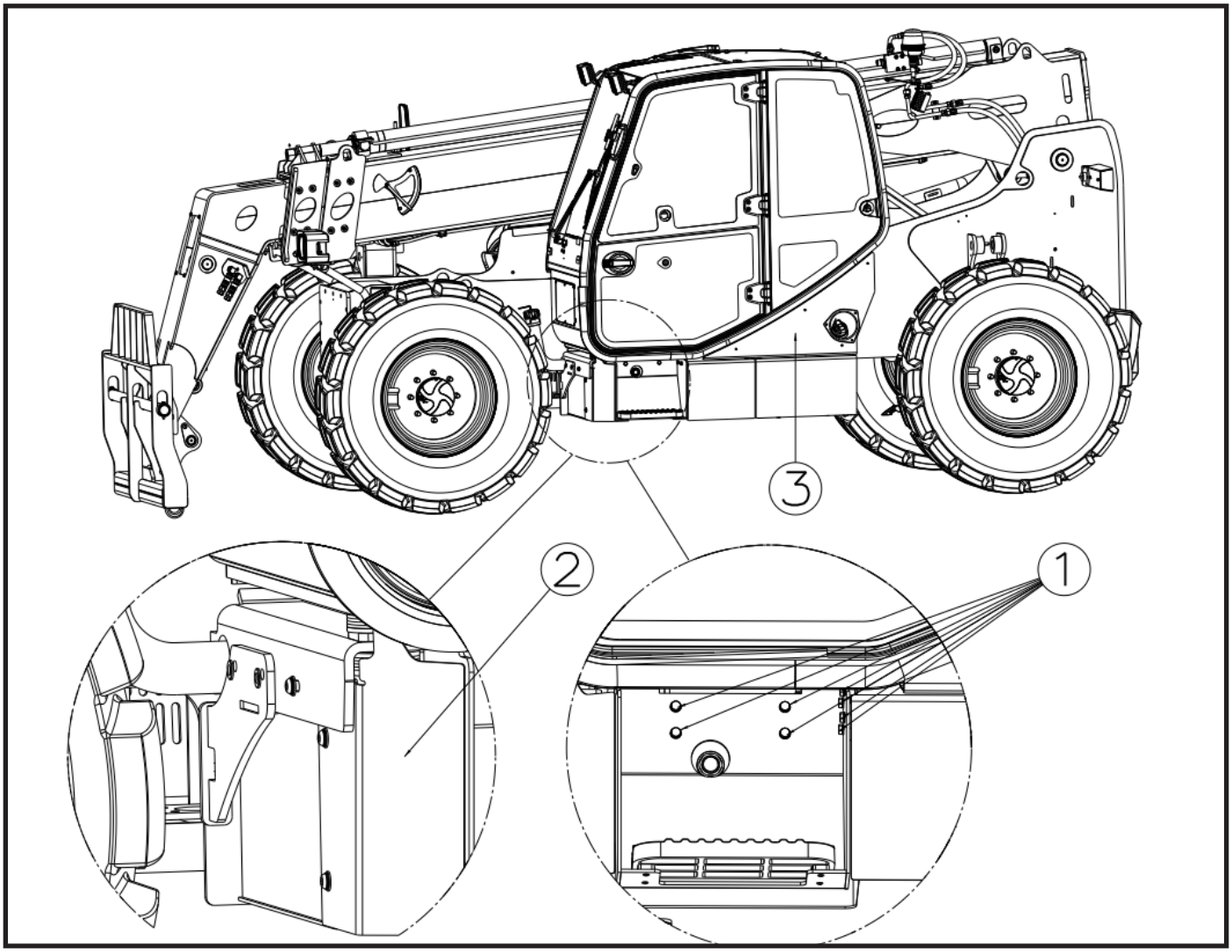

7. Remove the bottom support sheet of the cab (**2**).
8. Remove the cab side closure sheet (**3**).
9. Remove the hydraulic and fuel tank connection bracket (**4**).

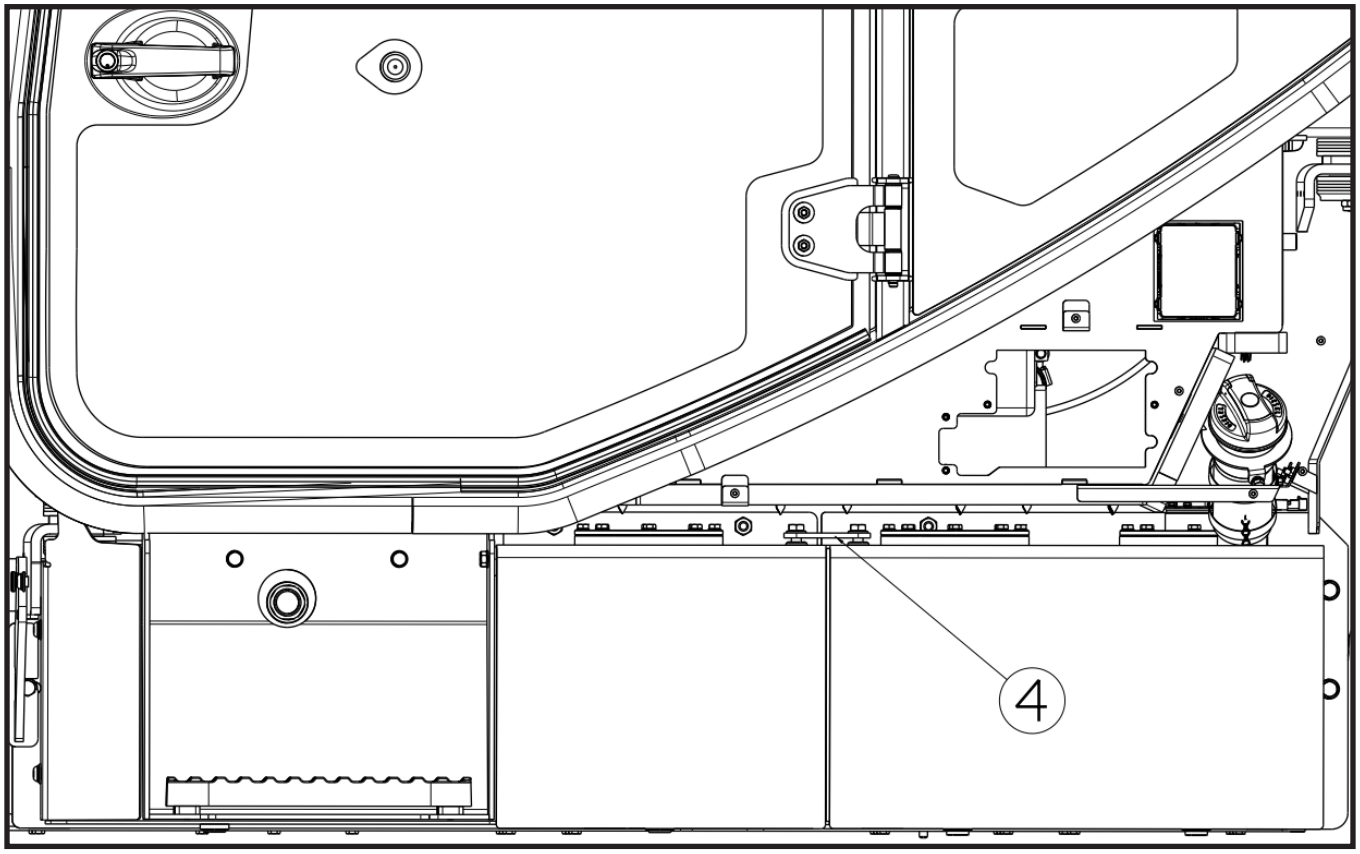

10. Remove the hoses (**5**) connected the Hydraulic Tank.

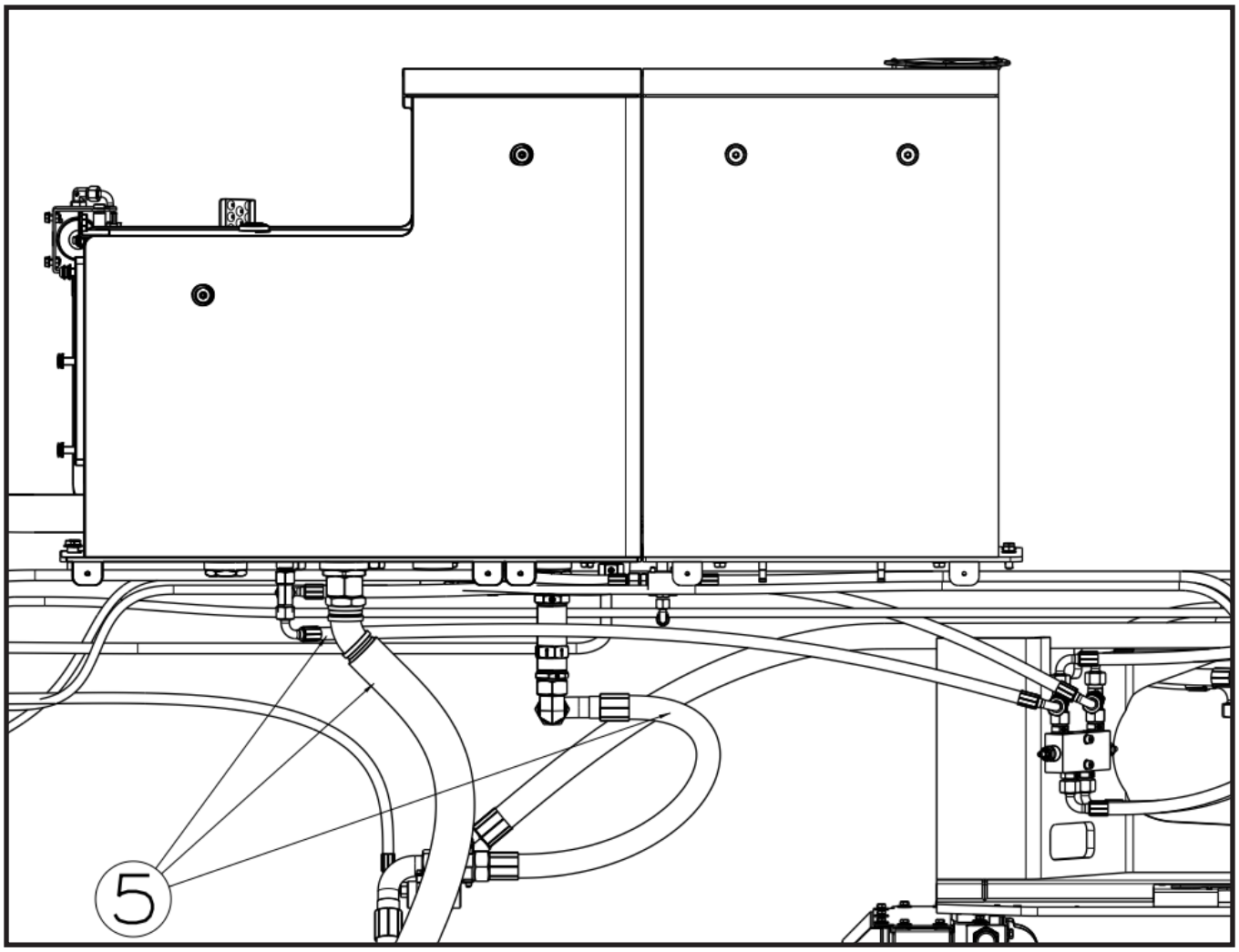

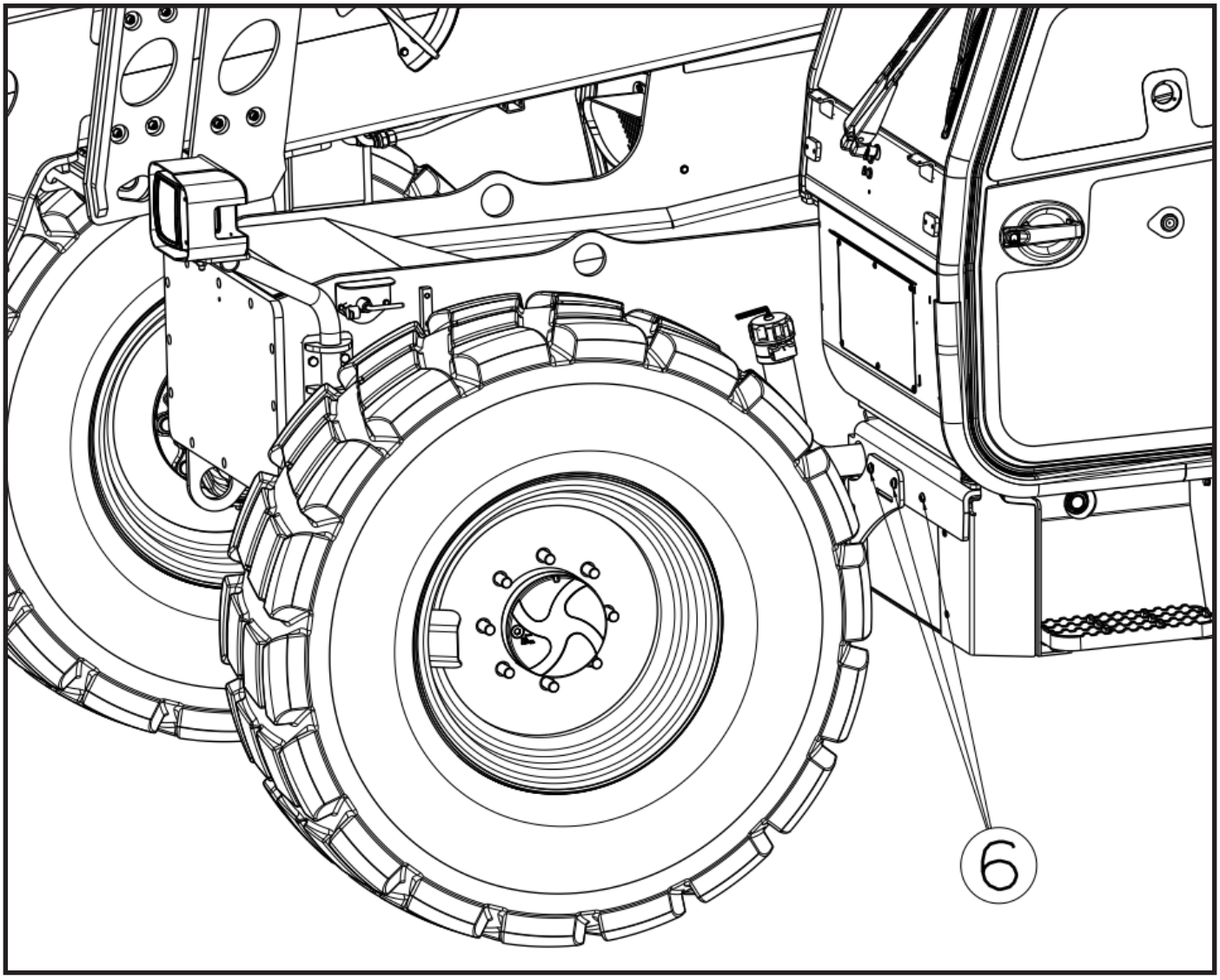

11. Remove the cab front bottom bolts (**6**) and remove the Hydraulic Tank.

Installation

1. Verify the suction filter, the flanges and the breather are fitted and the tank is clean inside.
2. Position the tank on the left side of the chassis with the fluid level gauge facing outward, so the level can be read from outside the machine.
3. Fit the washers to the three side bolts, apply Loctite 270 to the threads and start them by hand.
4. Fit the washers to the three rear bolts, apply Loctite 270 to the threads and start them by hand.
5. Tighten the side bolts to 77 ft-lb (105 Nm), then the rear bolts to 55 ft-lb (75 Nm).
6. Reconnect the hydraulic lines to their tagged positions with new fitting seals and torque the connections per Section 2.7 (Hydraulic Fittings).
7. Fill the tank with clean hydraulic fluid of the specified grade to the correct level. Refer to Section 3.
8. Start the engine, operate all hydraulic functions slowly through several cycles to purge air, then check for leaks and re-check the fluid level.

Tank Flanges, Suction Filter and Breather

1. With the tank drained, remove the blanking plugs from the tank ports. Inspect each O-ring and replace any that is damaged; the O-rings are critical to the tank sealing.
2. To fit a flange: fit the O-ring to the flange seat, position the flange on the tank, fit the washers to the sixteen M8 bolts and torque them to 18 ft-lb (25 Nm) in a diagonal sequence.
3. To fit the suction filter: apply Loctite 5331 thread sealant to the filter thread, one full turn, then install the filter in the tank and tighten it.
4. To fit the anti-splash breather: apply Loctite 5331 to the thread, one full turn, then fit the breather by hand.

Note: Loctite 5331 is a thread sealant for hydraulic connections. Apply one full turn of sealant to the thread; do not apply sealant to the sealing face of an O-ring joint.

10.16.Implement Pump Replacement

The implement pump is a variable displacement axial piston pump mounted directly to the transmission PTO. The pump mounting face is sealed with anaerobic sealant and an O-ring; no gasket is used.

WARNING — Use lifting equipment with a rated capacity of at least 1.5 times (150%) the weight of the component being lifted. Refer to the component weight table in this manual.

WARNING — Bodily injury hazard. Hydraulic circuits hold pressure after the engine is turned off. Relieve the system pressure and loosen hydraulic connections very slowly to allow the pressure to dissipate gradually. Do not allow oil to spray. Wear eye protection.

Removal

1. Park the machine on a firm, level surface, level the machine, fully retract the boom, lower the boom, place the transmission in (N) NEUTRAL, engage the park brake and shut the engine OFF.
2. Place a Do Not Operate Tag on both the ignition key switch and the steering wheel.
3. Open the engine cover. Allow the system fluids to cool.
4. Properly disconnect the battery. Refer to Section — Battery, for procedure.
5. Drain the hydraulic oil.
6. Remove the hydraulic hoses (**1**), (**2**), (**3**), (**4**) mounted on the pump.

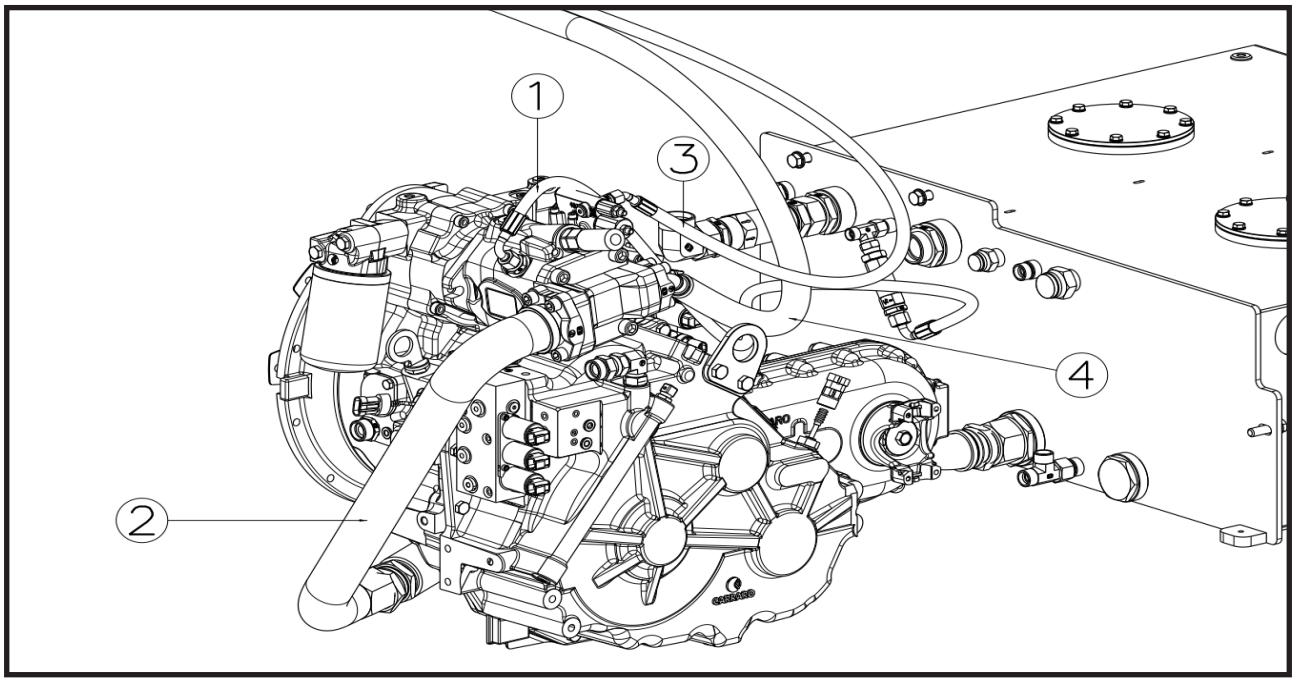

7. Remove bolts (**5**) connected the pump.
8. Remove the pump (**6**).

Installation

1. Clean the pump and transmission mounting faces completely. Remove all traces of old sealant from both faces; residual sealant prevents the pump from seating square and causes leakage.
2. Install a new O-ring on the pump mounting face and verify it is fully seated in its groove.
3. Apply Loctite 574 in a continuous bead around the pump mounting face and over the O-ring, leaving no gaps.
4. Position the pump on the transmission PTO by hand and align the mounting holes. Do not draw the pump into position with the bolts.
5. Fit the washers to the mounting bolts and apply Loctite 270 to the bolt threads.
6. Install the two mounting bolts and torque to the value in the table below, using a torque wrench.
7. Prime the pump before starting the engine. Refer to Implement Pump Priming.
8. Reconnect the hydraulic lines to their tagged positions with new fitting seals, and torque the connections per Section 2.7 (Hydraulic Fittings).
9. Open the suction line shut-off valve, if equipped. Fill the hydraulic tank to the correct level. Refer to Section 3.

Note: Fitting preparation: when a pump is supplied without fittings, remove the blind plugs from the pump ports and install the male stud connectors before mounting the pump. Cap the connector openings until the hydraulic lines are connected. Do not leave any pump port open.

Implement Pump Fastener Torques

Joint	Fastener	Retainer	Torque
Pump to transmission PTO	M12 x 40, class 10.9, with washer (2)	Loctite 270 on threads; Loctite 574 on mounting face	81 ft-lb (110 Nm)

Implement Pump Priming

NOTICE — Component damage hazard. Operating the pump with a dry case will damage the rotary group within minutes. The pump case must be filled with clean hydraulic fluid before the engine is started.

1. Verify all lines are connected and torqued, and the hydraulic tank is filled to the correct level.
2. Remove the case drain plug or hose at the highest point of the pump case.
3. Slowly fill the pump case with clean hydraulic fluid of the specified grade until the fluid reaches the port.
4. Reinstall the case drain plug or hose and torque to [TBD] ft-lb ([TBD] Nm).
5. Verify the suction line shut-off valve, if equipped, is fully open.
6. Start the engine and run at low idle for 15 seconds, then turn the engine off. Wait 15 seconds. Repeat this start and stop cycle once more.
7. Start the engine, run at low idle and check the pump, case drain and suction connections for leaks.
8. Operate all hydraulic functions slowly through several full cycles to purge air from the circuits.
9. Re-check the hydraulic tank fluid level and add fluid as required.
10. Check the system pressures. Refer to Implement Pump Pressure Checks.

Component Terminology

To understand the safety, operation and maintenance information presented in this section, it is necessary that the operator/mechanic be familiar with the names and locations of the major assemblies of the transmission. The following illustration identifies the components that are refer tored to throughout this section.

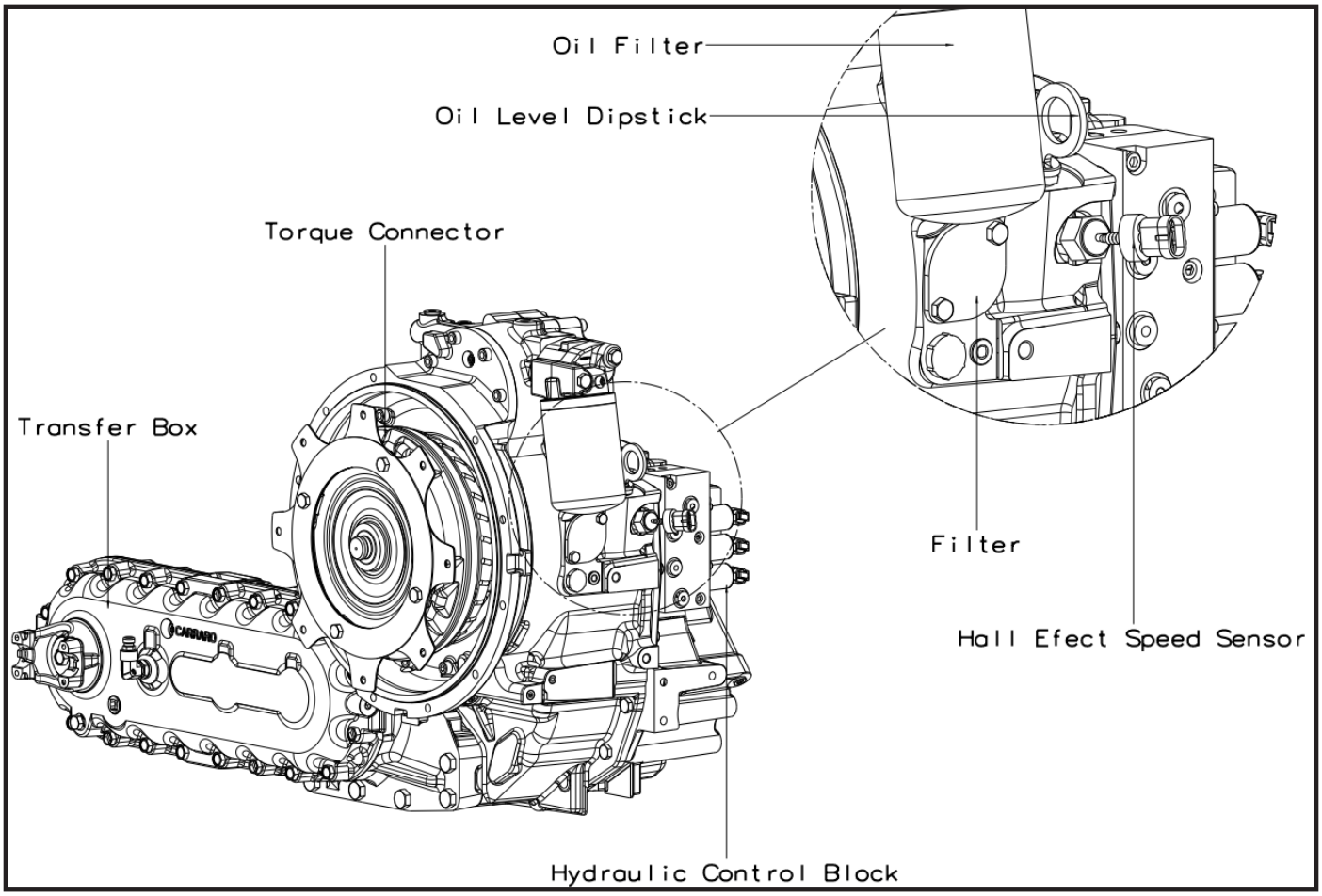

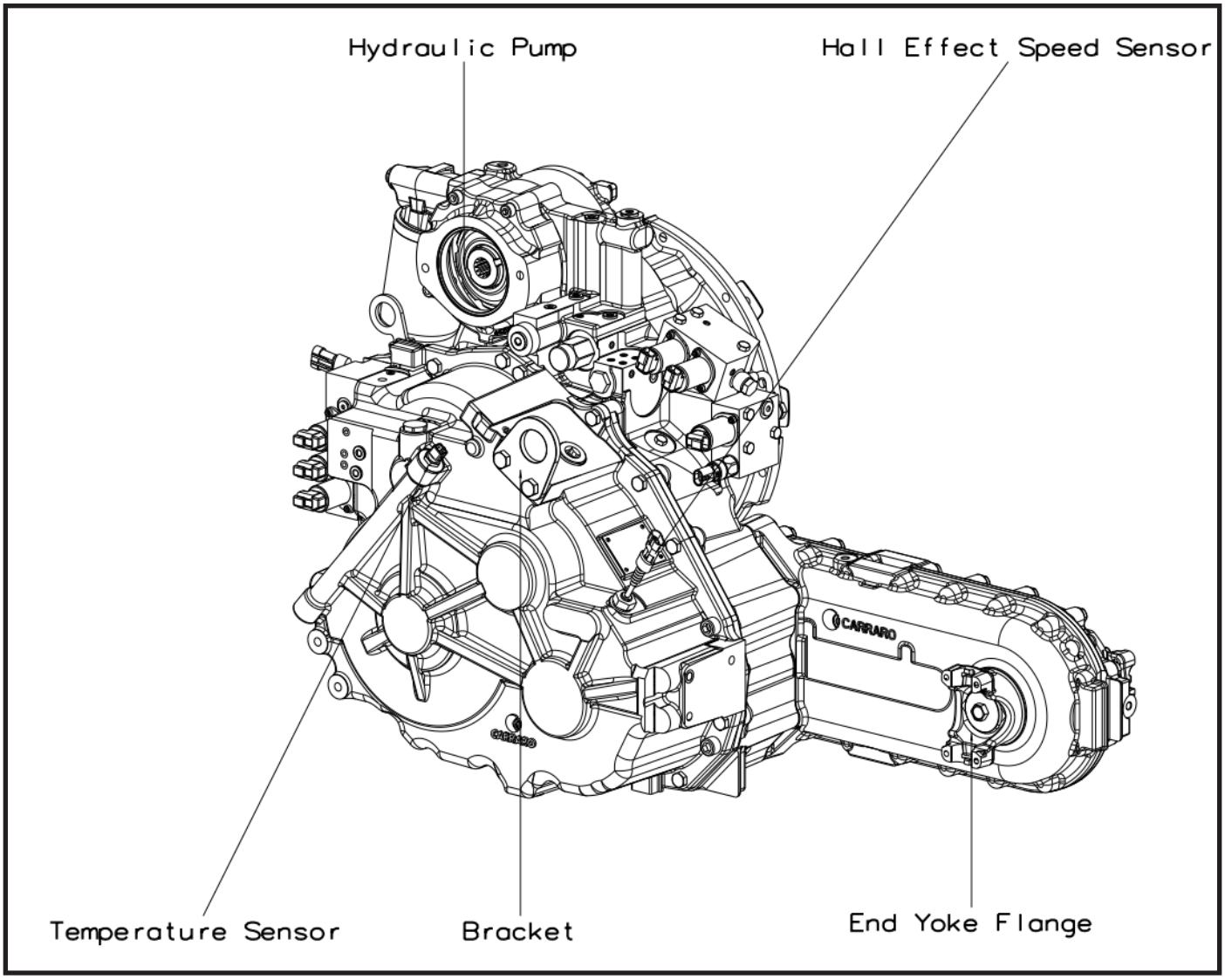
Hydraulic Pump
Hall Effect Speed Sensor
Temperature Sensor
Bracket
End Yoke Flange
CARRARO

Transmission Serial Number

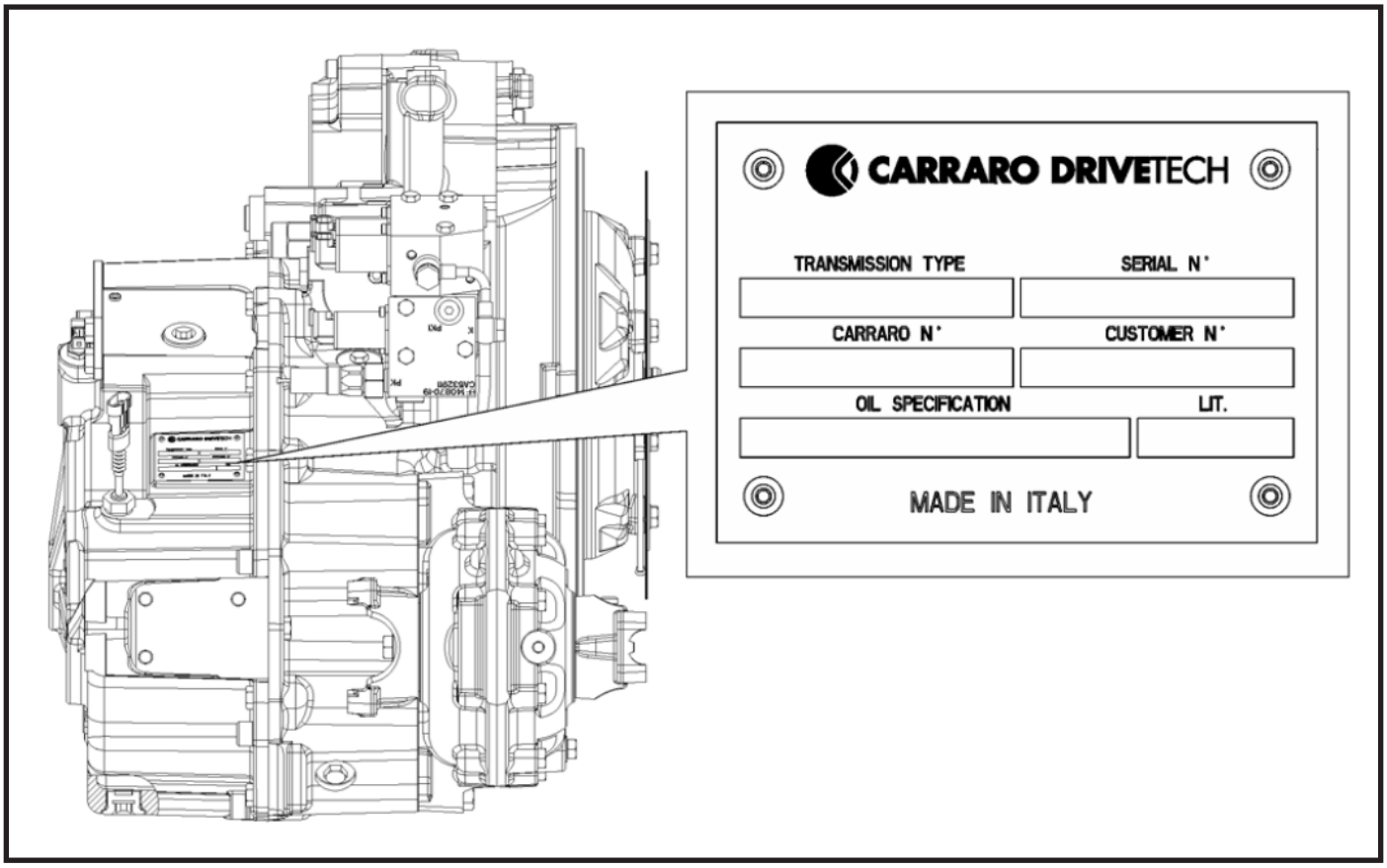

Specifications and Maintenance Information

For transmission, oil specifications and maintenance information, *Refer to Section — Specifications & General Information*.

Transmission Replacement
Removal

1. Park machine on a firm, level surface, level machine, fully retract boom, lower boom, place transmission in (N) NEUTRAL, engage park brake and shut engine OFF.
2. Place a Do Not Operate Tag on both the ignition key switch and steering wheel.
3. Open engine cover. Allow system fluids to cool.
4. *Refer to Section — Engine Replacement*, for detailed removal instructions.

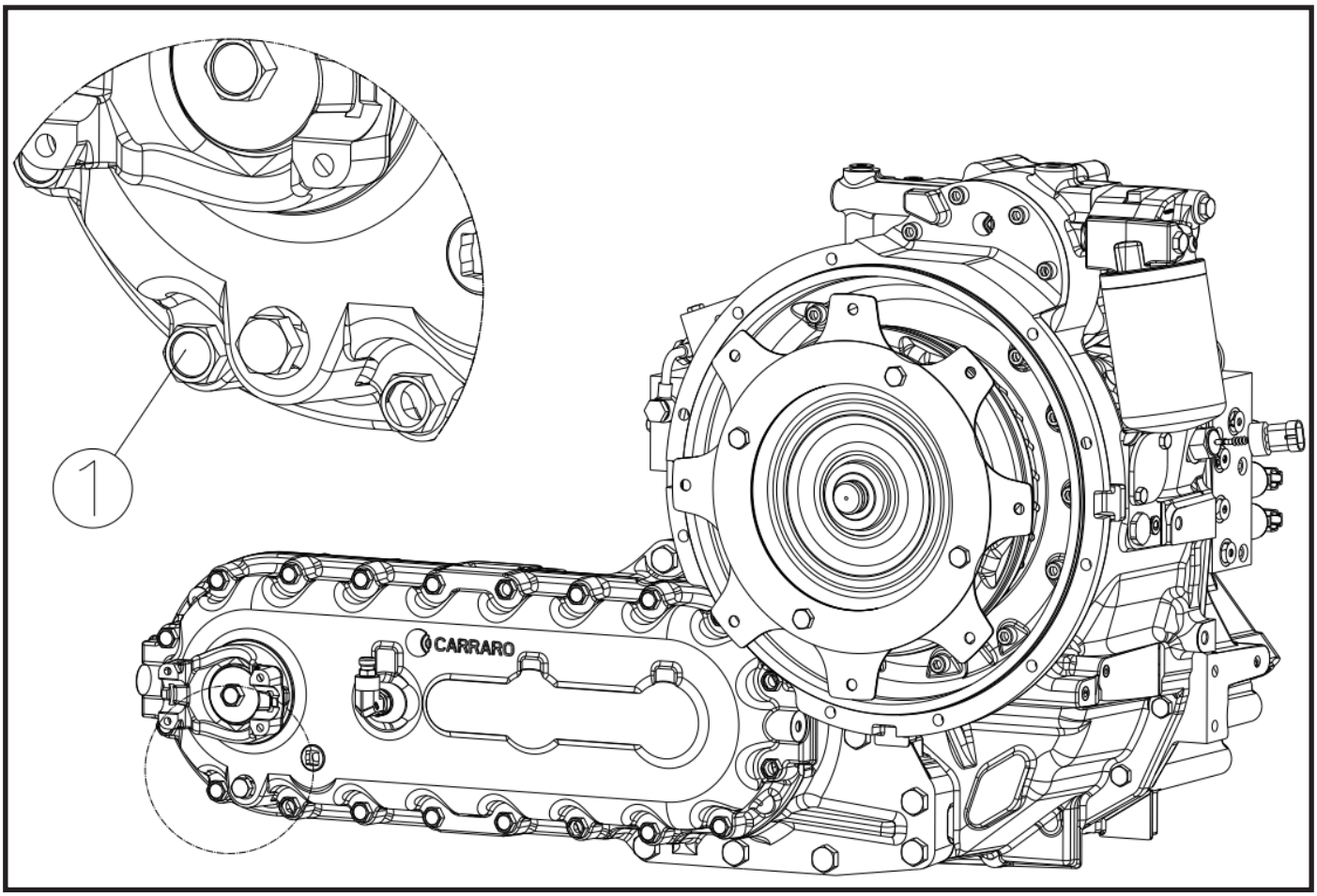

5. Place a suitable receptacle under transmission drain plug (**1**). Remove the transmission drain plug, and allow the transmission oil to drain into the receptacle.
6. Remove the connection bolts of Transmission/Engine.
7. Remove the Transmission by securing a suitable crane to the lifting bracket.

Inspection and Internal Repair

Refer to Section — Specifications and Maintenance Information

Transmission Fluid/Filter Replacement

1. Park machine on a firm, level surface, level machine, fully retract boom, lower boom, place transmission in (N) NEUTRAL, engage park brake and shut engine OFF.
2. Place a Do Not Operate Tag on both the ignition key switch and steering wheel.
3. Open engine cover. Allow system fluids to cool.
4. Properly disconnect the battery. *Refer to Section — Battery*, for procedure.
5. Remove the belly pan (**1**) underneath the transmission.

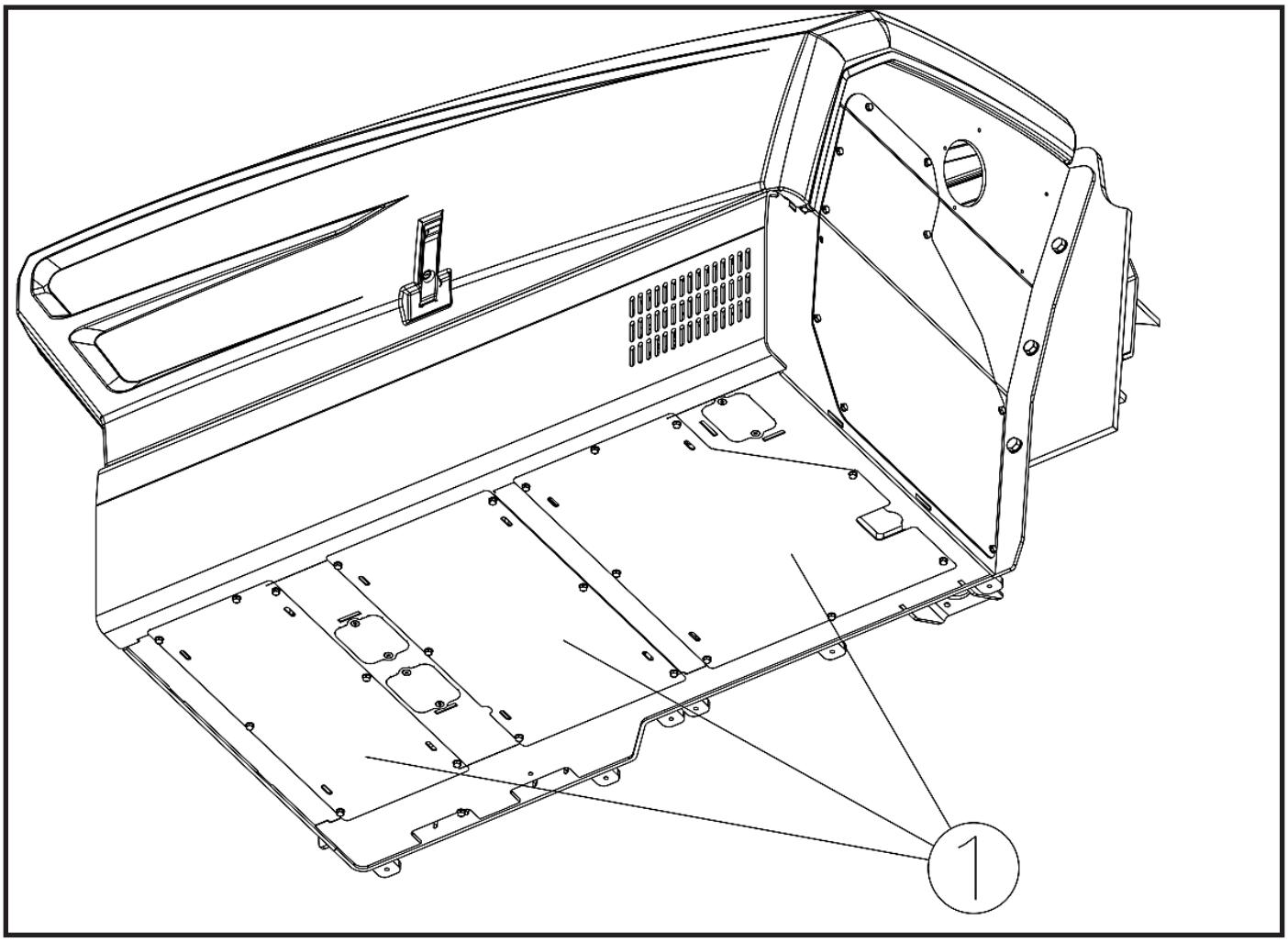

6. Remove transmission dipstick (**2**).

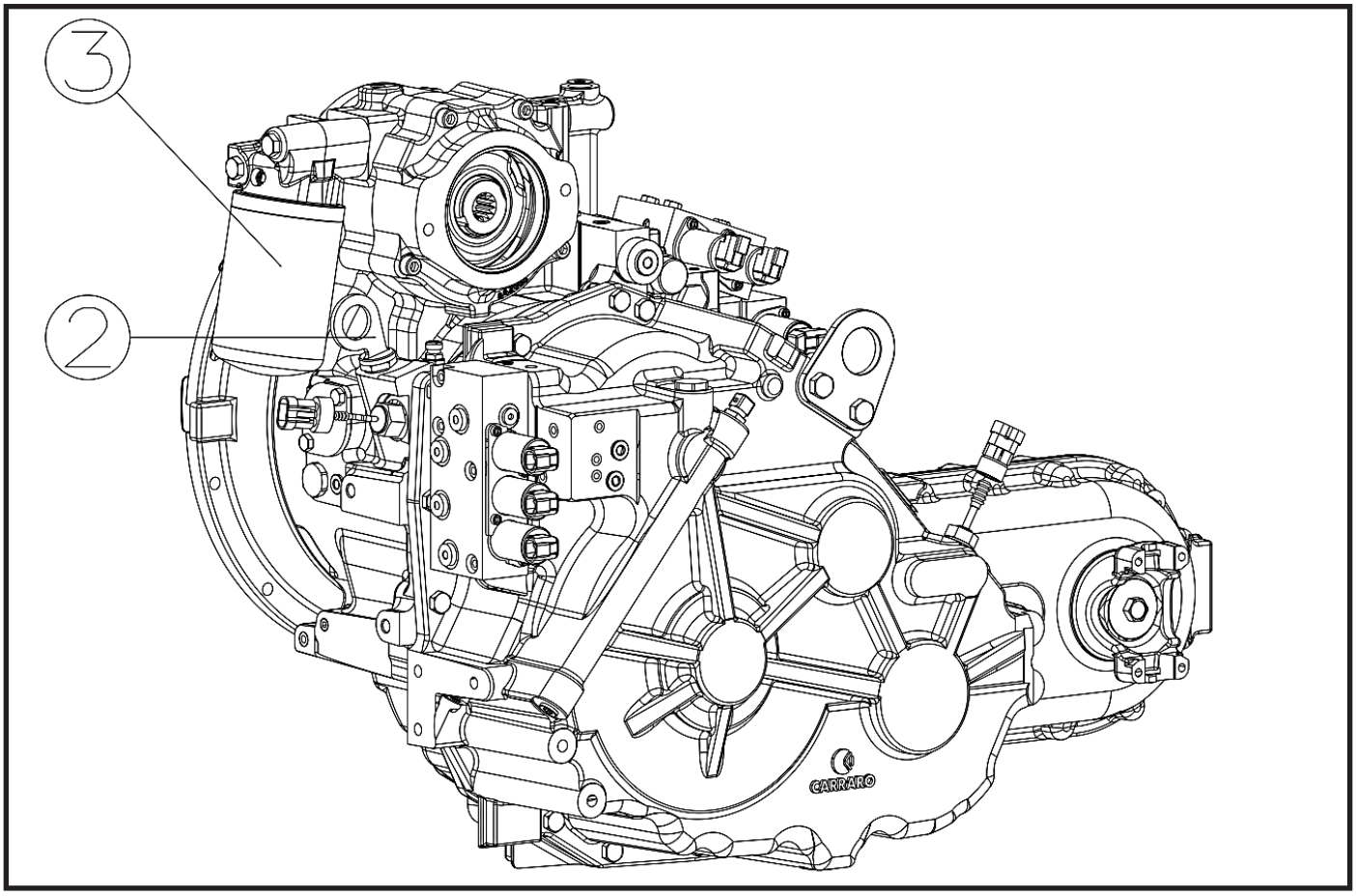

7. Place a suitable container beneath the transmission drain. Open drain valve and allow transmission oil to drain into a properly labeled container. Close transmission drain valve. Dispose of used transmission oil properly.
8. Reinstall belly pan (**1**).
9. Remove transmission oil filter (**3**). Drain and dispose of properly.
10. Fill transmission initially with 11,4 liters (12 quarts) through the transmission dipstick tube.
12. Reconnect the battery. *Refer to Section — Battery*, for procedure.
12. Perform the Transmission Fluid Level Check as outlined in *Section — Transmission Fluid Level Check*

Transmission Fluid Level Check

Note: To drain and fill the oil and to check the oil level the transmission must be horizontal and installed on the vehicle.

1. Start machine on a firm, level surface, level machine, fully retract boom, lower boom, place transmission in (N) NEUTRAL, engage park brake and run engine at idle.
2. Open engine cover.

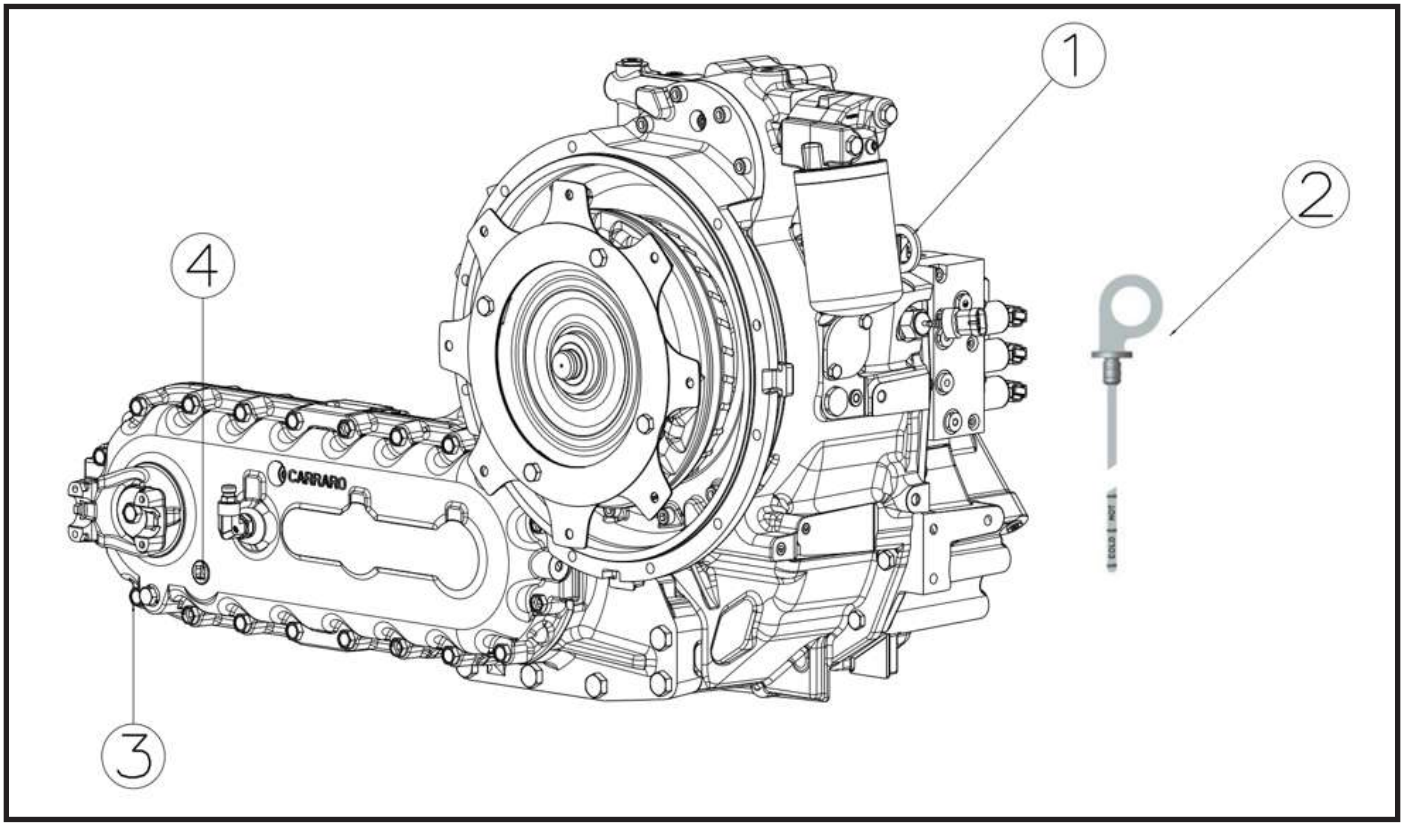

3. Remove the transmission oil dipstick (**1**) and check the oil level.
4. Check that oil level stays within Min and Max limits marked in the level Dipstick (**2**) (HOT range).
   - If the level is within the limits the transmission is operative.
   - If the level is under Min limit, add oil through the “Oil Inlet Port” (**4**) then assemble the removed plug and restart the procedure from point 2.
   - If the level is above Max limit, drain oil through the “Oil Outlet Port” (**3**) then assemble the removed plug and restart the procedure from point 2.
5. Replace the transmission dipstick.
6. Close and secure the engine cover.
7. Shut engine OFF.

Transmission Temperature Sensor Removal

1. Park machine on a firm, level surface, level machine, fully retract boom, lower boom, place transmission in (N) NEUTRAL, engage park brake and shut engine OFF.
2. Place a Do Not Operate Tag on both the ignition key switch and steering wheel.
3. Open engine cover. Allow system fluids to cool.
4. Properly disconnect the battery. *Refer to Section — Battery*, for procedure.
5. Unplug transmission temperature sensor connector from wiring harness connector.
6. The sensor is threaded into transmission housing. Remove the sensor.

Installation and Testing

1. Thread transmission temperature sensor into transmission housing snugly, then connect sensor connector to wiring harness connector.
2. Properly connect the battery. *Refer to Section — Battery*, for procedure.
3. Check for proper fluid level.
4. Start engine, allow it to reach operating temperature and observe operator display cluster for warning indication. If sensor is not defective, problem could be elsewhere; possibly in a shorted wire, damaged transmission, improper or low fluid, etc.
5. Close and secure the engine cover.
6. Remove Do Not Operate Tag from ignition key switch and steering wheel.

10.18.Hydraulic Valves

Main Control Valve Replacement

The main control valve is mounted at the rear frame.

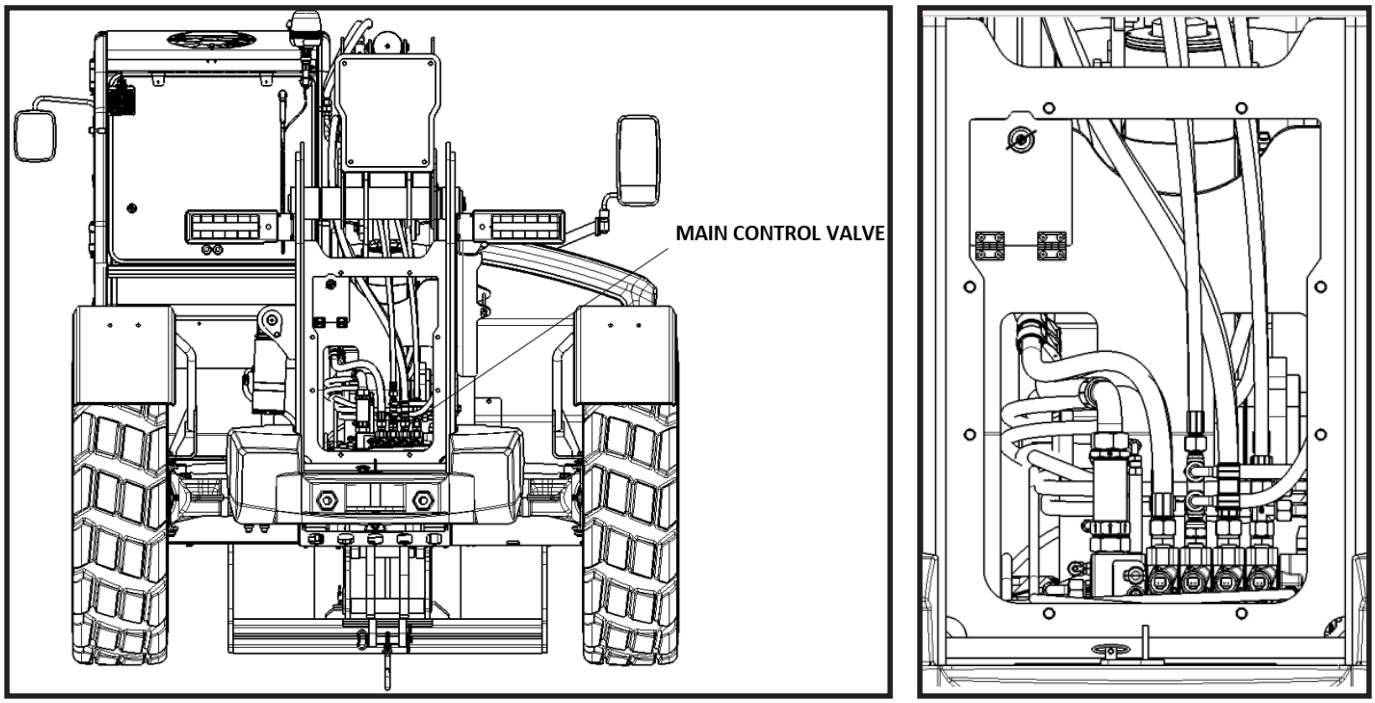

The main control valve assembly (**1**) consists of working sections with their own valve assemblies, each providing a specific hydraulic function. Those functions are; tilt (**2**), lift/lower (**3**), quick coupling (**4**), extension (**5**).

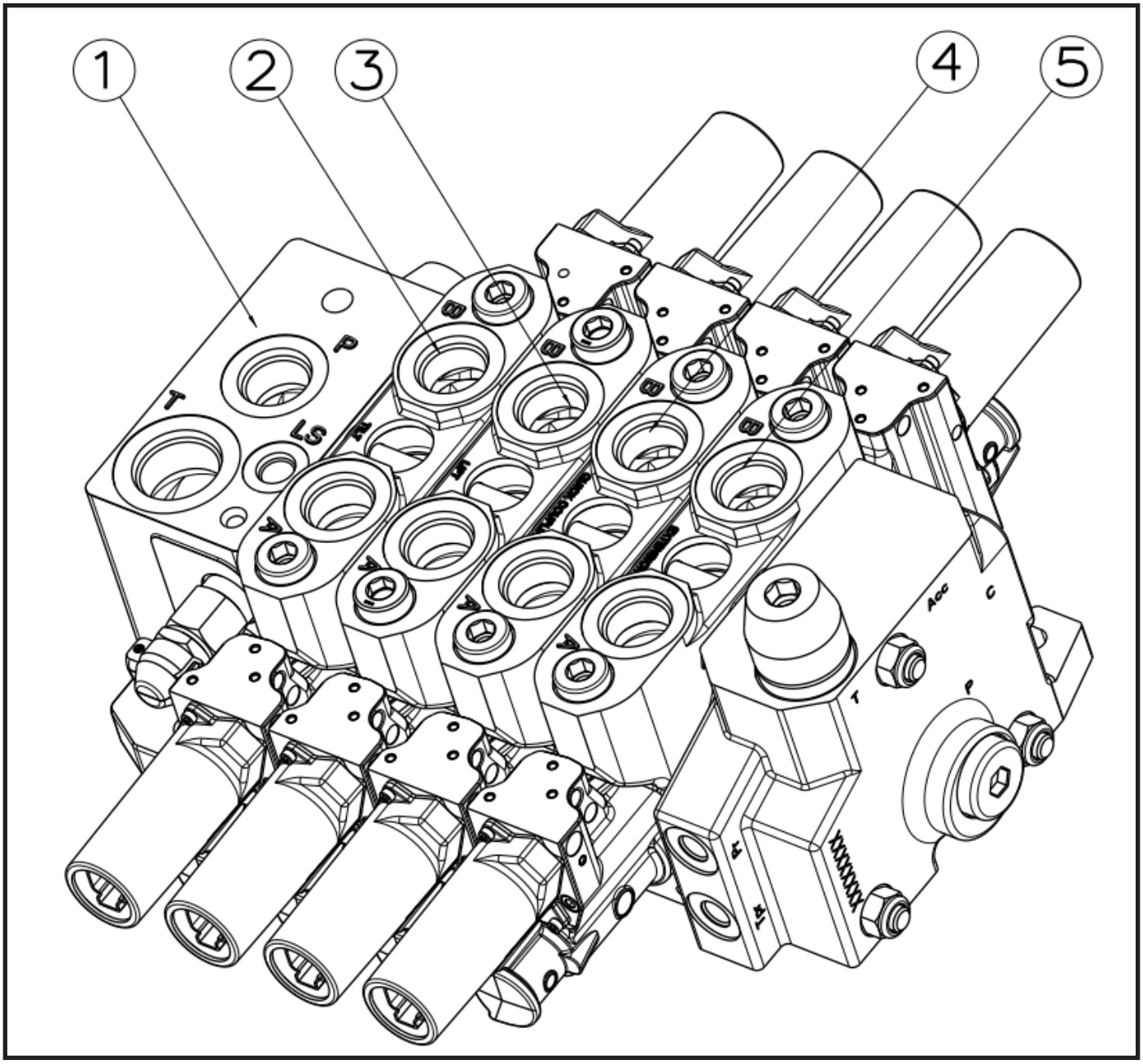

Removal

1. Park the machine on a firm, level surface, level the machine, fully retract the boom, lower the boom, place the transmission in (N) NEUTRAL, engage the park brake and shut the engine OFF.
2. Place a Do Not Operate Tag on both the ignition key switch and the steering wheel.
3. Open the engine cover. Allow the system fluids to cool.
4. Properly disconnect the battery. *Refer to Section — Battery*, for procedure.
5. Remove the main control valve cover (**1**).

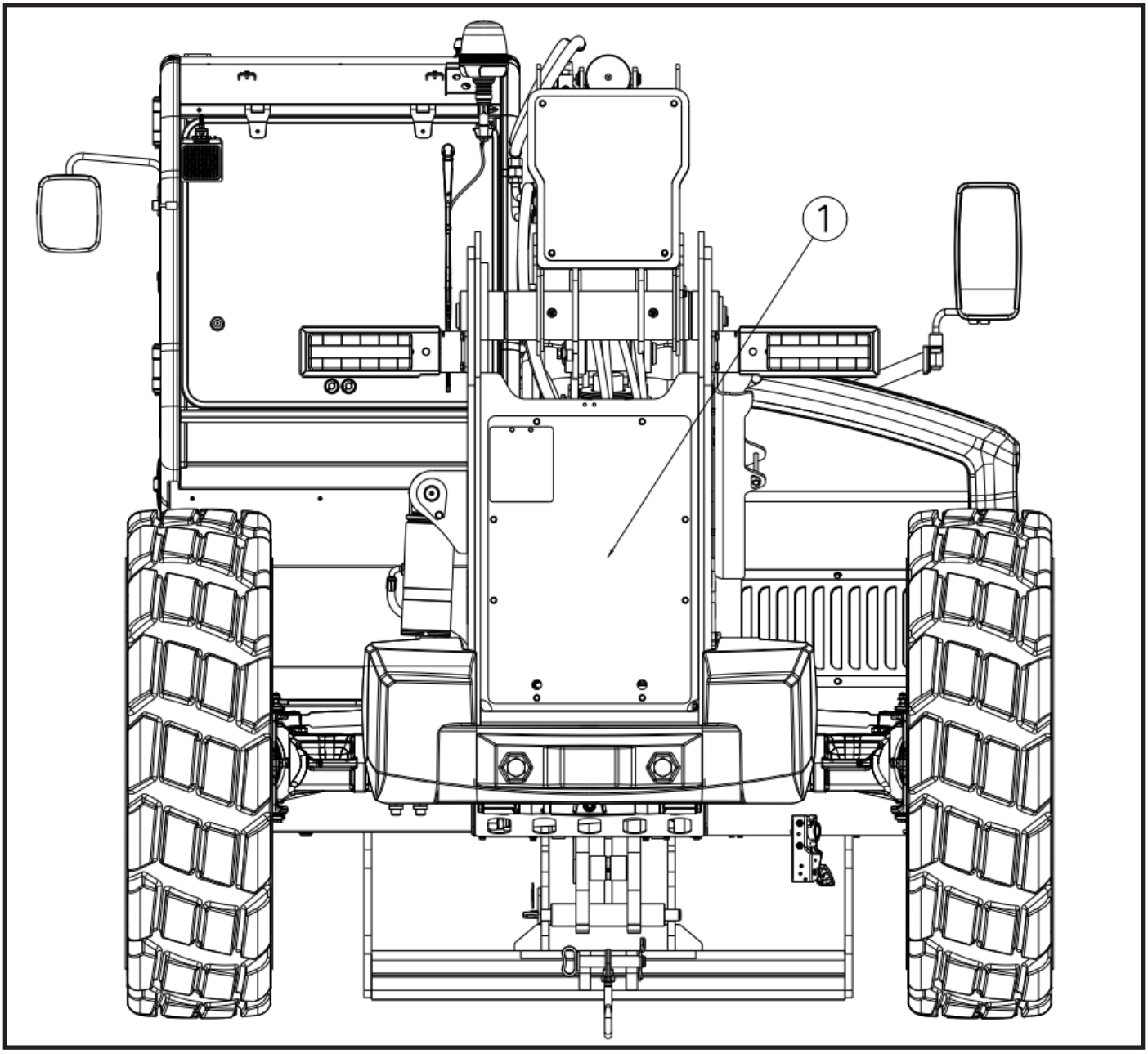

6. Disconnect and cap all the hydraulic hoses, tubes and wires at the main control valve.
7. Support the valve and remove the three bolts securing the main control valve to the frame. Remove the main control valve.

Installation

1. Install the main control valve onto the frame, aligning the bolts with the holes in the end sections of the main control valve. Slide the main control valve into position, and tighten the bolts.
2. Prime the main control valve by filling the inlet openings with fresh, filtered hydraulic oil from a clean container, before attaching the hoses.
3. Use new oiled O-rings as required. Uncap and connect all hoses, clamps, etc. to the main control valve.
4. Tighten all tube and hose clamps.
5. Fill the hydraulic oil reservoir. *Refer to Section — Hydraulic Tank Oil Filling* for procedure.
6. Properly connect the battery. *Refer to Section — Battery*, for procedure.
7. Start the engine and run throttle for about one minute without moving the machine or operating any hydraulic functions.
8. Inspect for leaks and check the level of the hydraulic fluid in the reservoir. Shut the engine OFF.
9. Install main control valve cover.
10. Close and secure the engine cover.
11. Remove the Do Not Operate Tag from the ignition key switch and the steering wheel.

Brake Valve Replacement

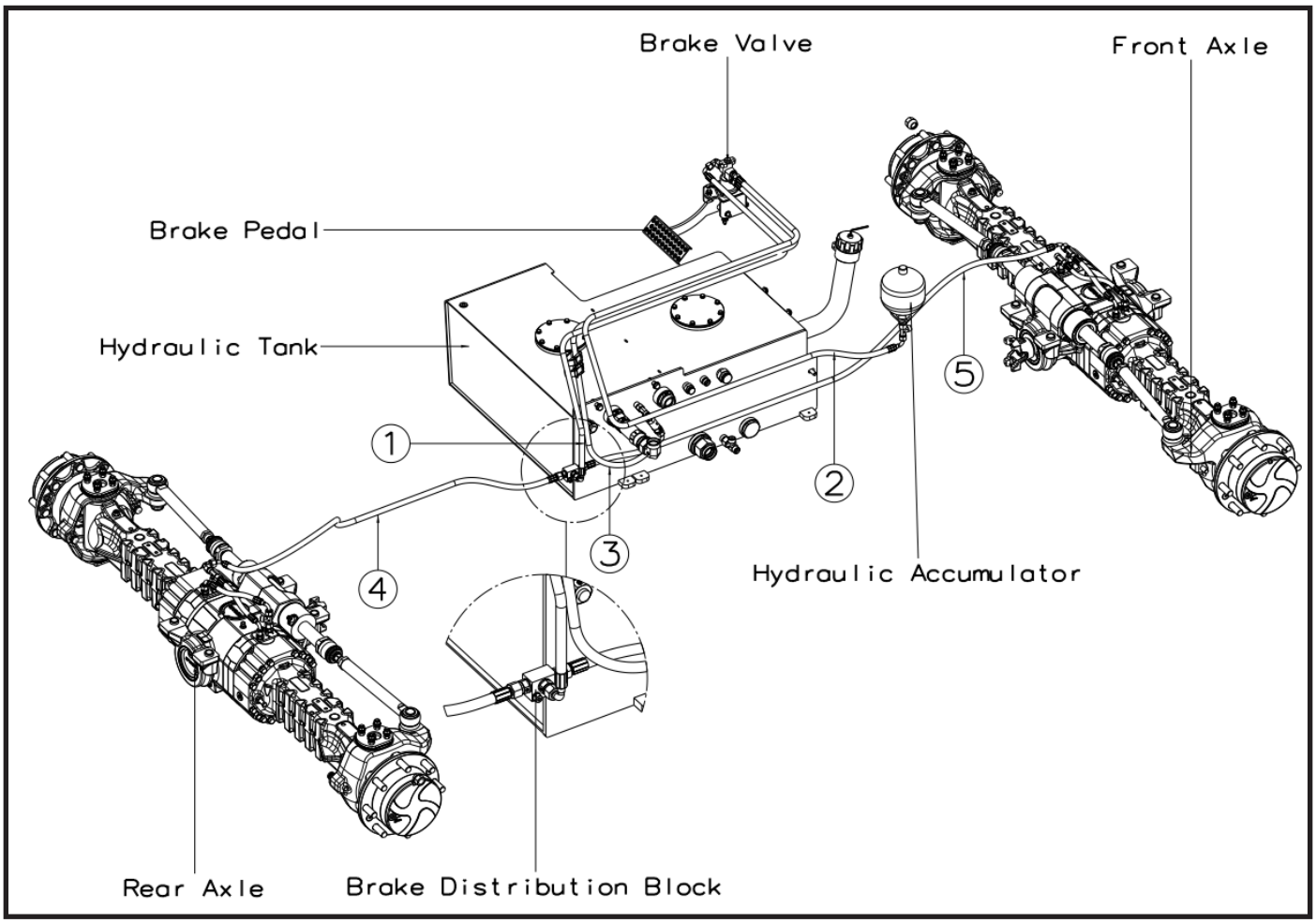

HYDRAULIC HOSES	
1	Brake Valve to Brake Distribution Block
2	Brake Valve to Hydraulic Accumulator
3	Brake Valve to Hydraulic Tank
4	Brake Distribution Block to Rear Axle (P2 Port)
5	Brake Distribution Block to Front Axle (P2 Port)

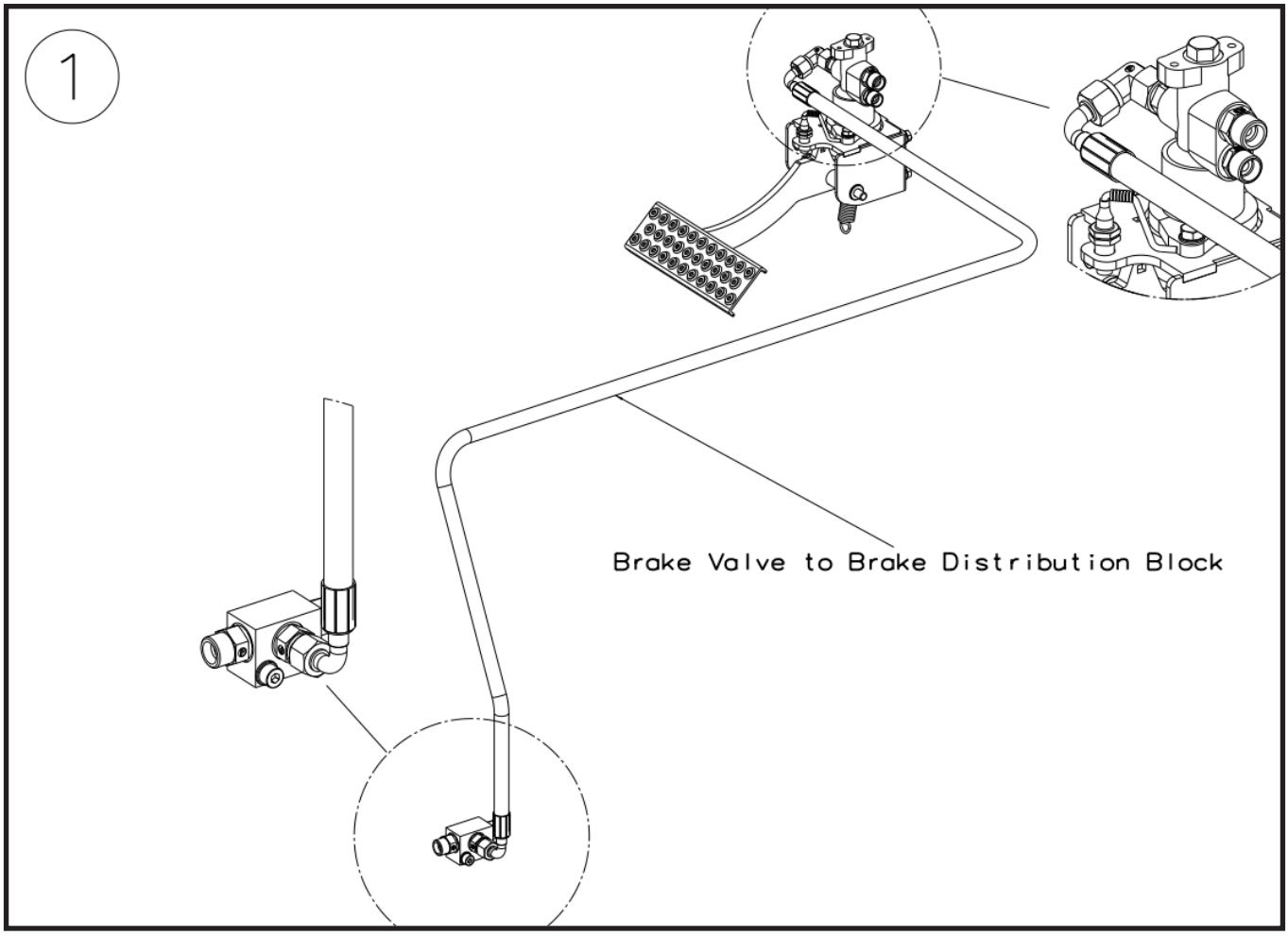
1
Brake Valve to Brake Distribution Block

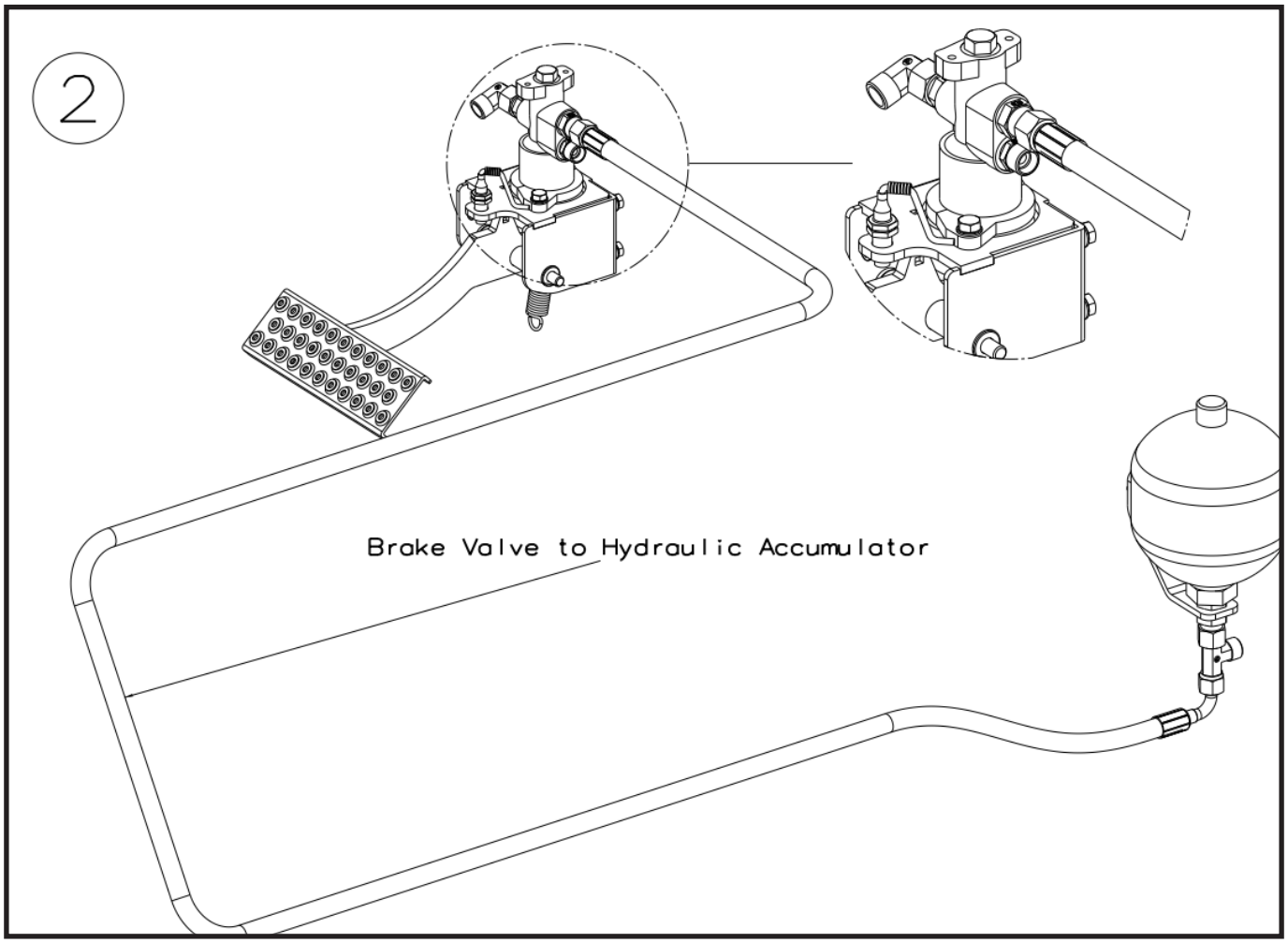
2
Brake Valve to Hydraulic Accumulator

3

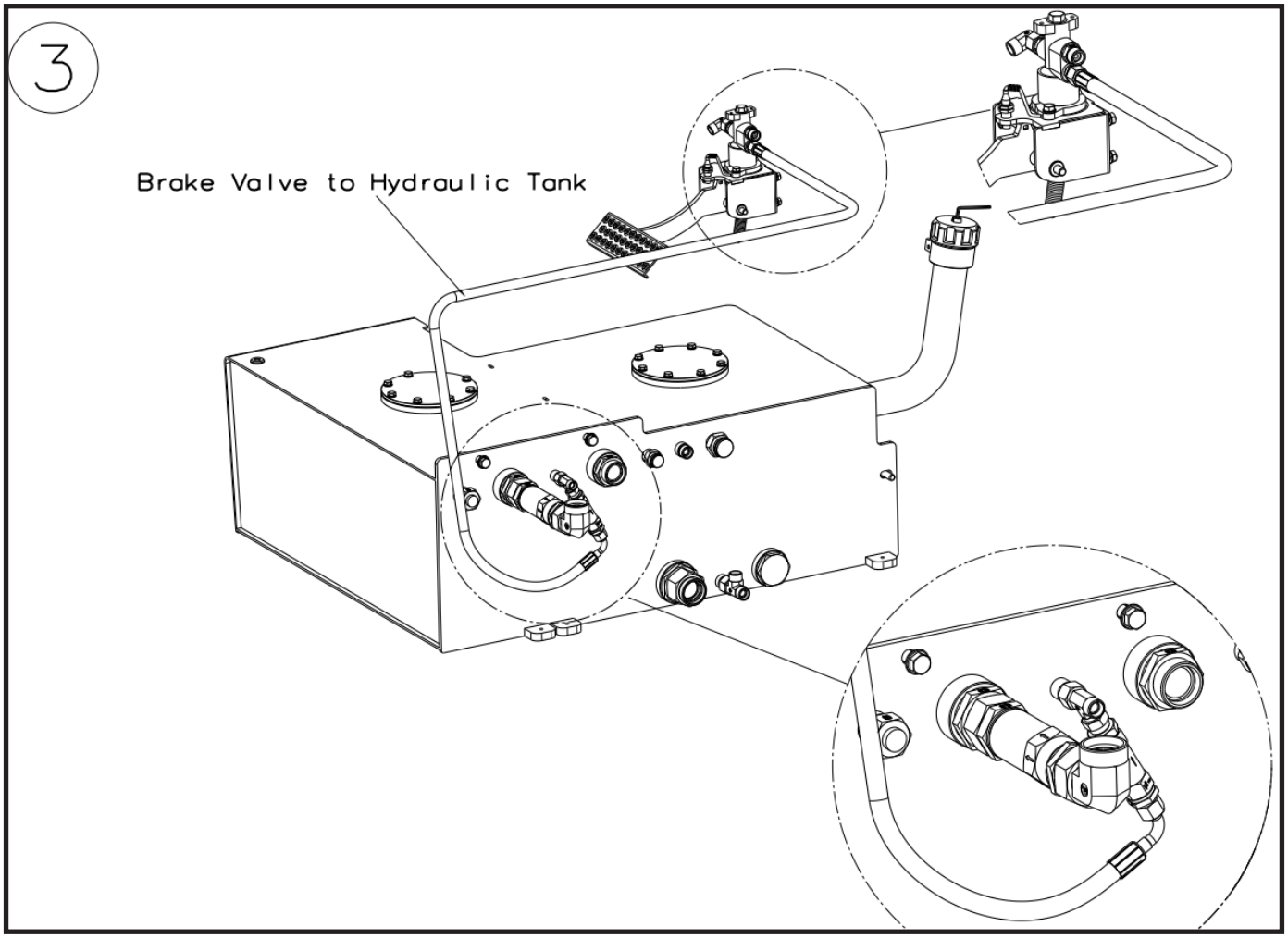
Brake Valve to Hydraulic Tank

4

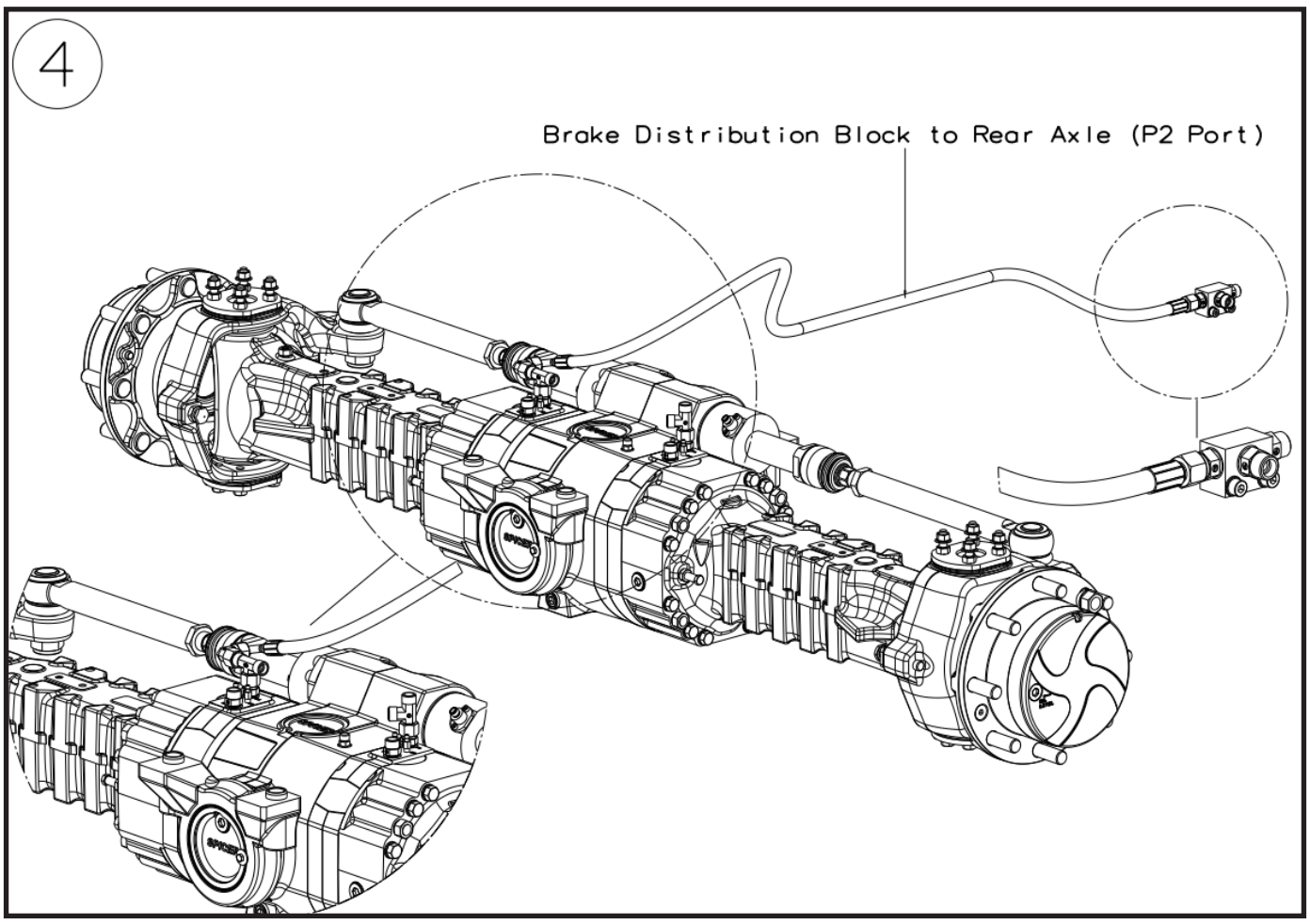
Brake Distribution Block to Rear Axle (P2 Port)

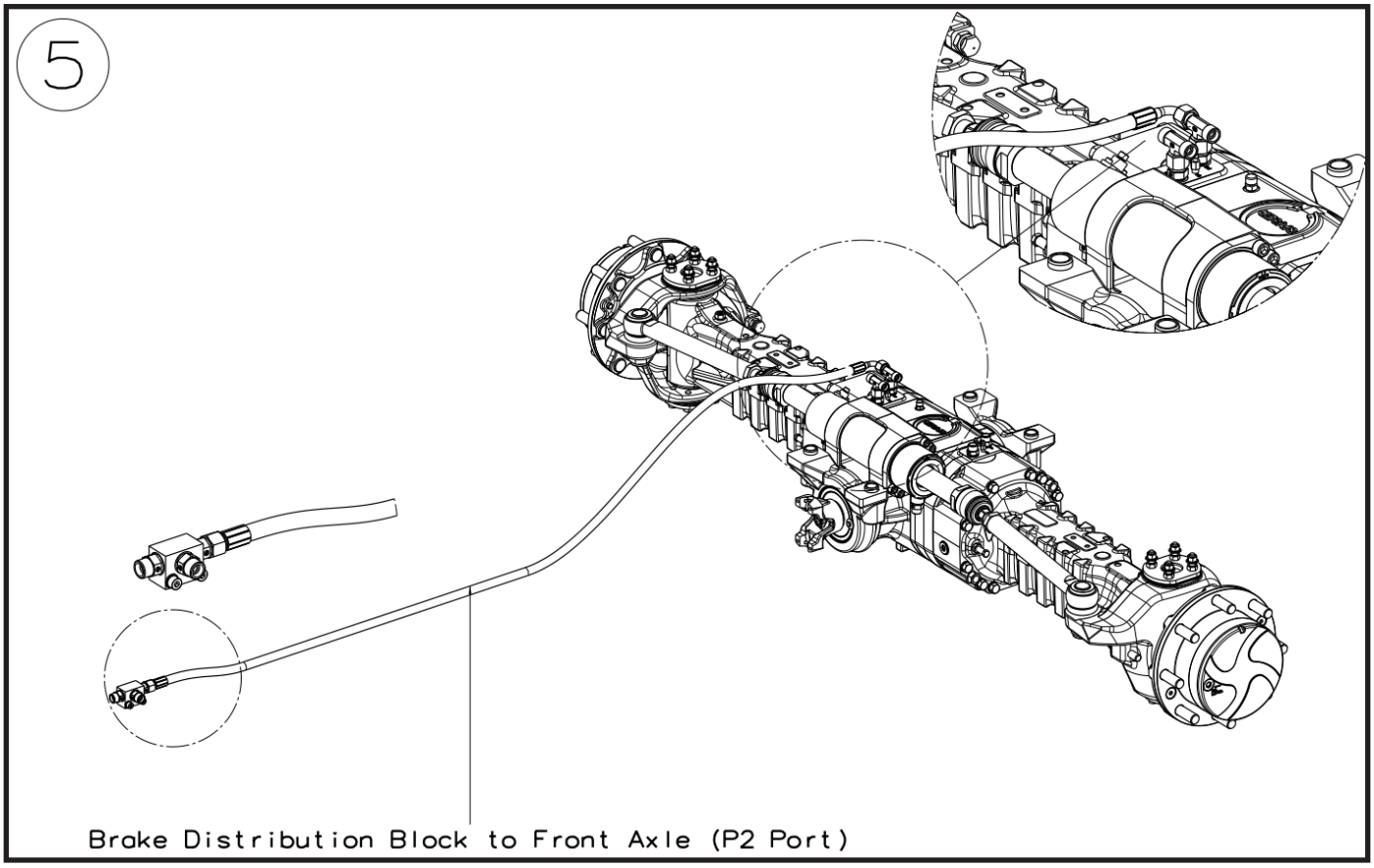

Removal

1. Park the machine on a firm, level surface, level the machine, fully retract the boom, lower the boom, place the transmission in (N) NEUTRAL, engage the park brake and shut the engine OFF.
2. Place a Do Not Operate Tag on both the ignition key switch and the steering wheel.
3. Open the engine cover. Allow the system fluids to cool.
4. Properly disconnect the battery. *Refer to Section — Battery*, for procedure.
5. Remove the cab front cover (**1**).

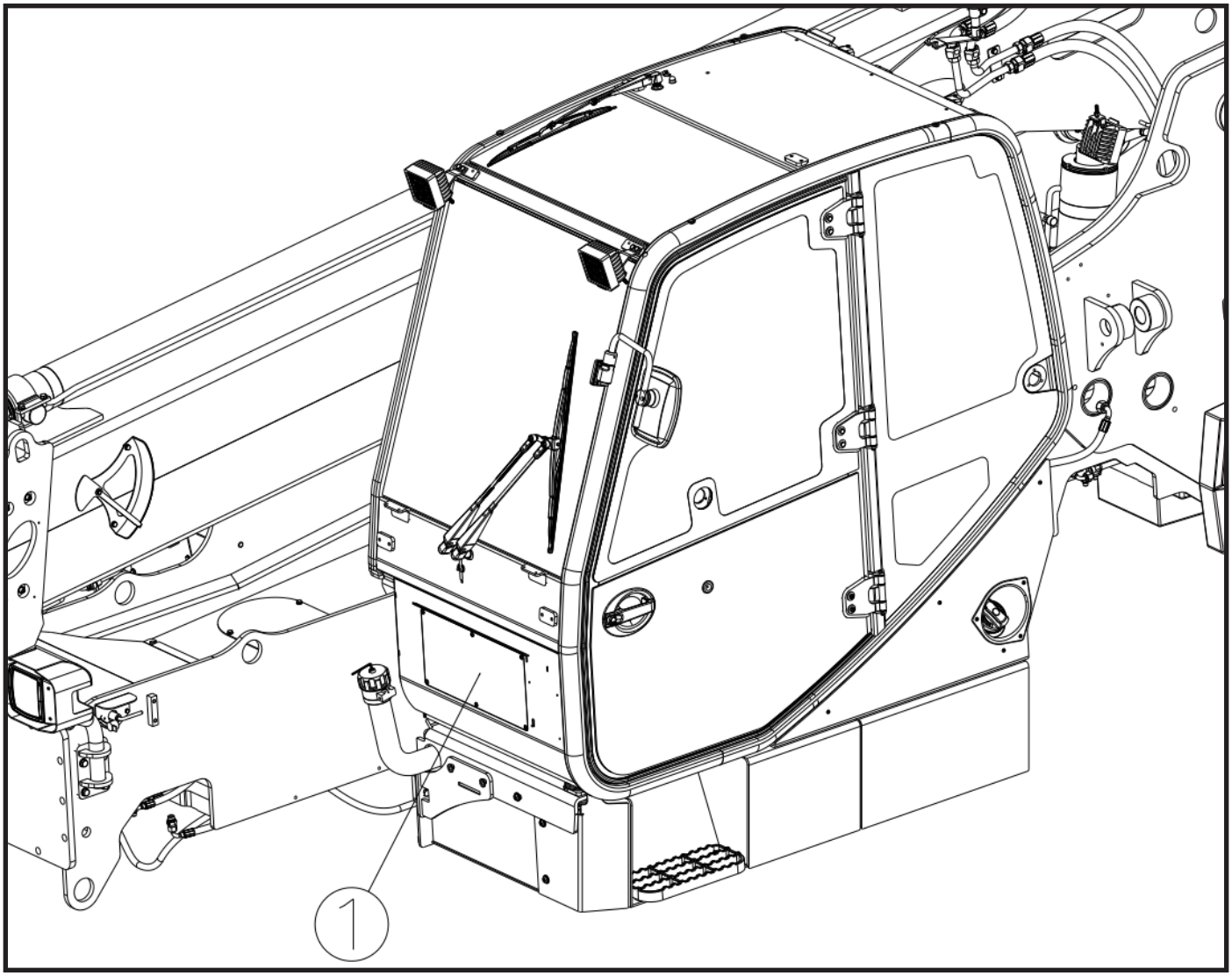

1. Remove the Brake Pedal (**2**).
2. There are three Hydraulic Hoses on the Brake Valve. Remove the those hoses (**3**).
3. Remove the Brake Valve.

Installation

To install, reverse the removal procedure.

Accumulator Valve Replacement

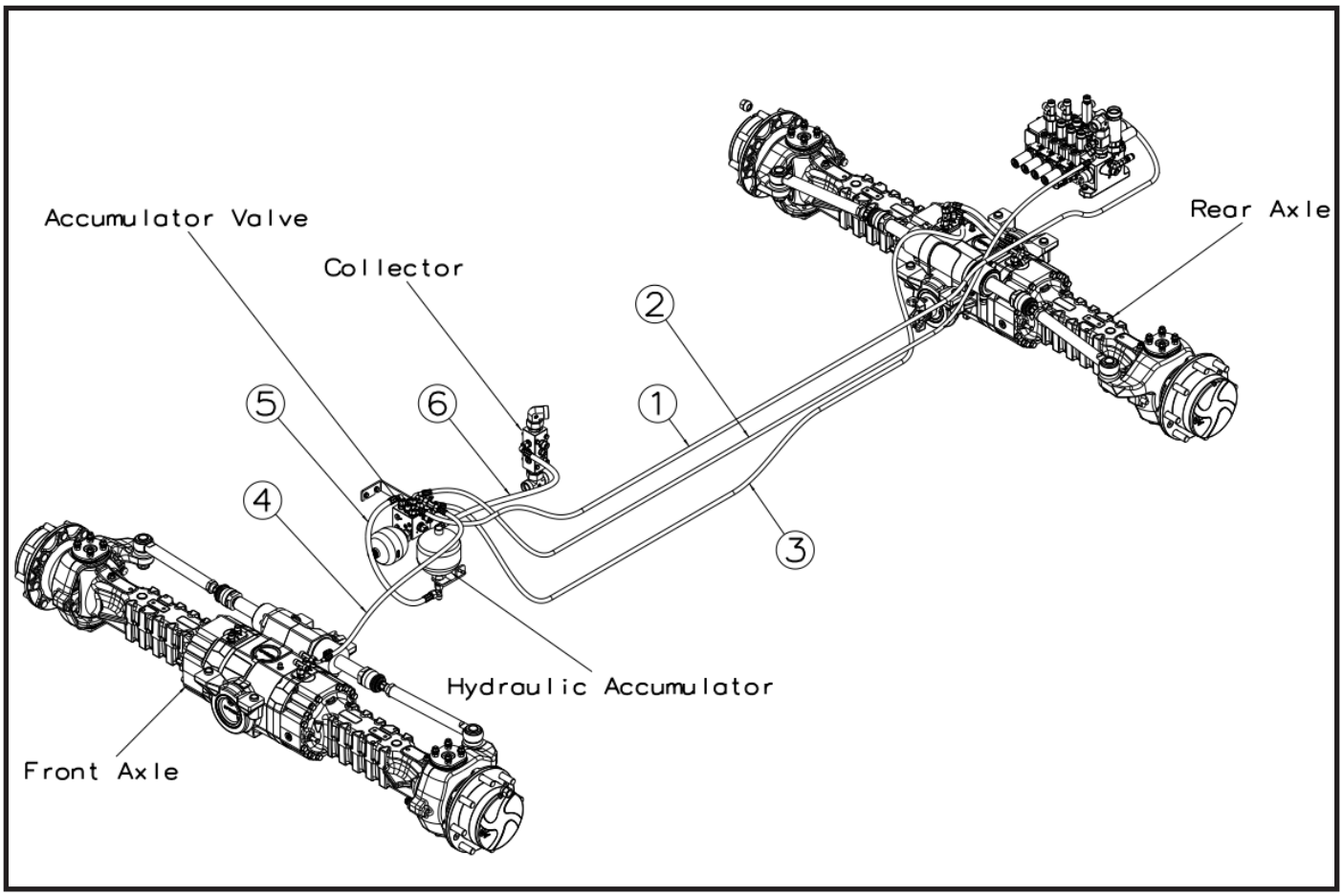

HYDRAULIC HOSES	
1	Accumulator Valve (MAcc Port) to Main Control Valve (Pr Port)
2	Accumulator Valve (P Port) to Main Control Valve (P Port)
3	Accumulator Valve (JS Port) to Rear Axle (P1 Port)
4	Accumulator Valve (JS Port) to Front Axle (P1 Port)
5	Accumulator Valve (F Port) to Hydraulic Accumulator
6	Accumulator Valve (T Port) to Collector

1

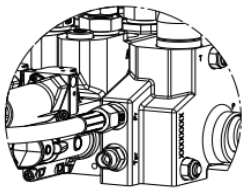

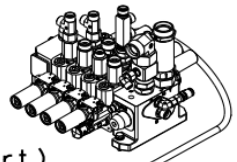

Accumulator Valve (MAcc Port) to Main Control Valve (Pr Port)

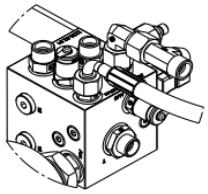

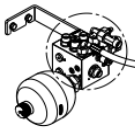

2

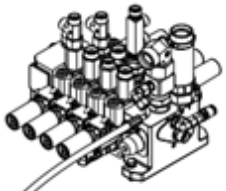

Accumulator Valve (P Port) to Main Control Valve (P Port)

3

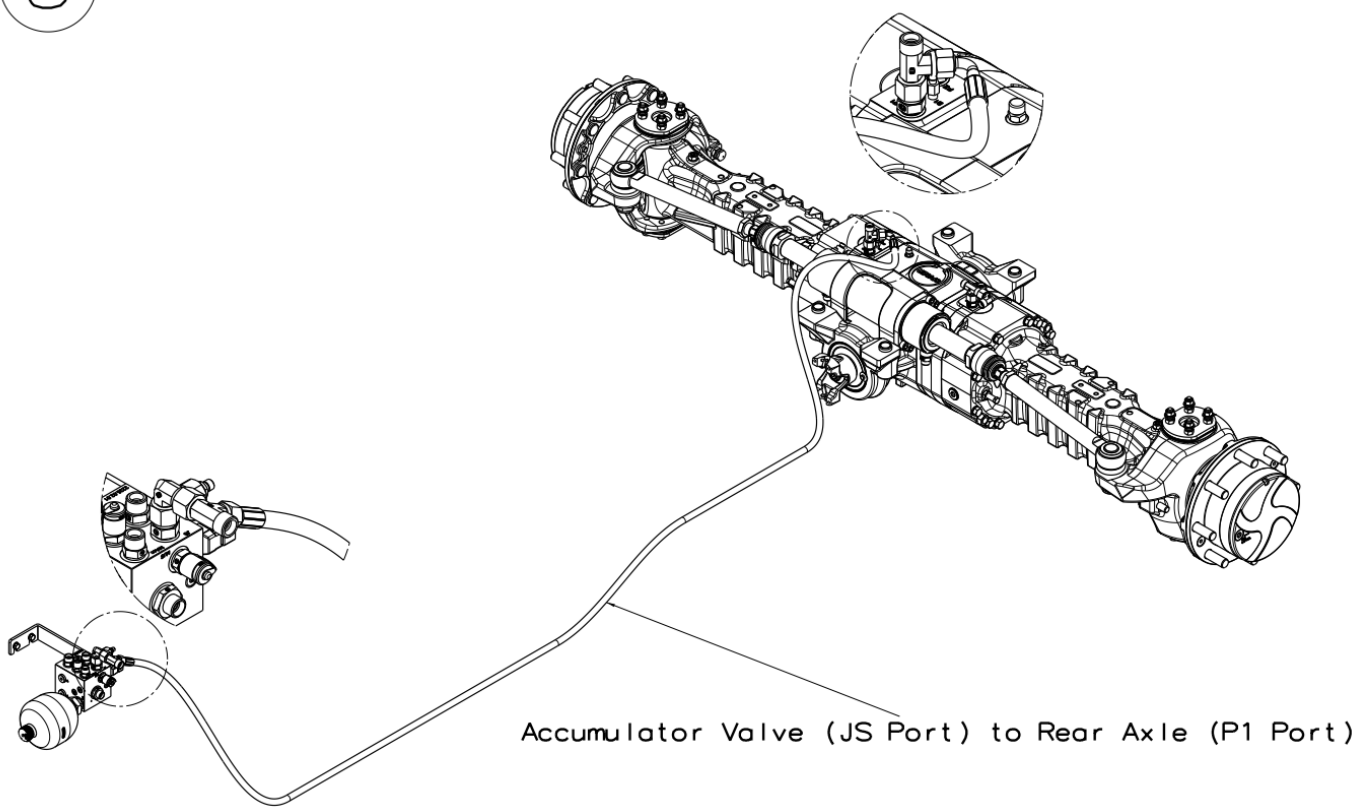
Accumulator Valve (JS Port) to Rear Axle (P1 Port)

4

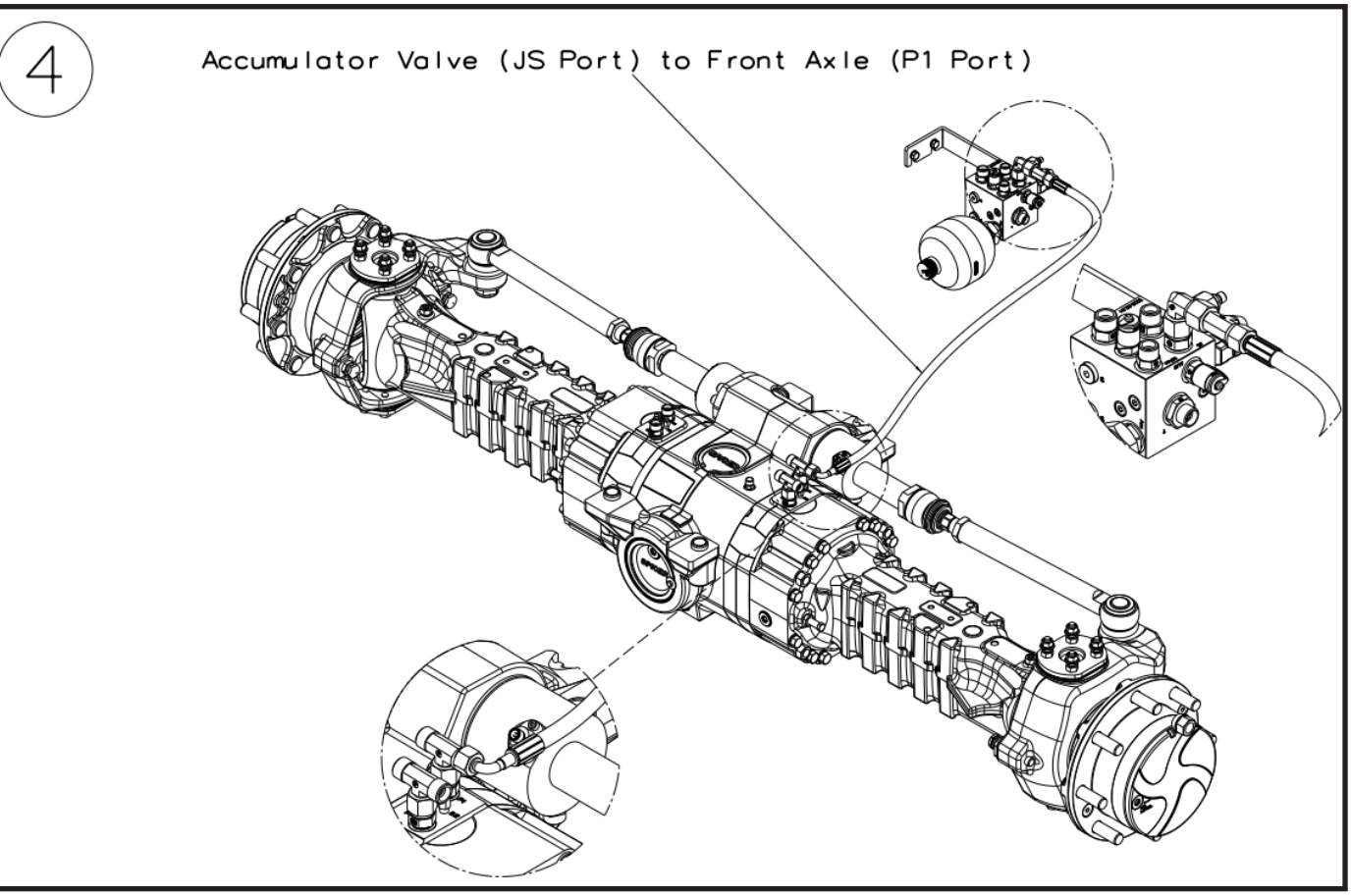
Accumulator Valve (JS Port) to Front Axle (P1 Port)

5

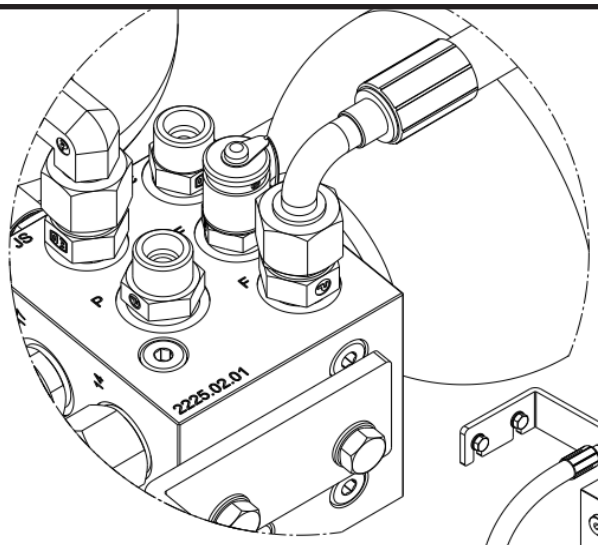

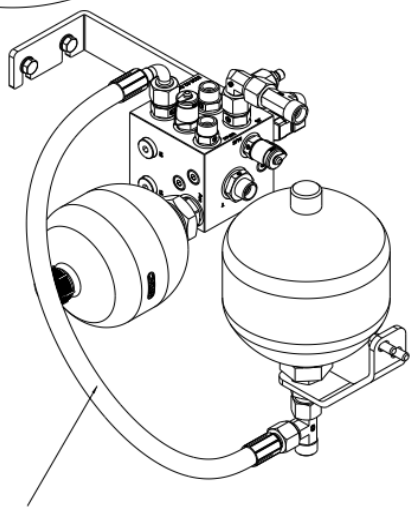

Accumulator Valve (F Port) to Hydraulic Accumulator

6

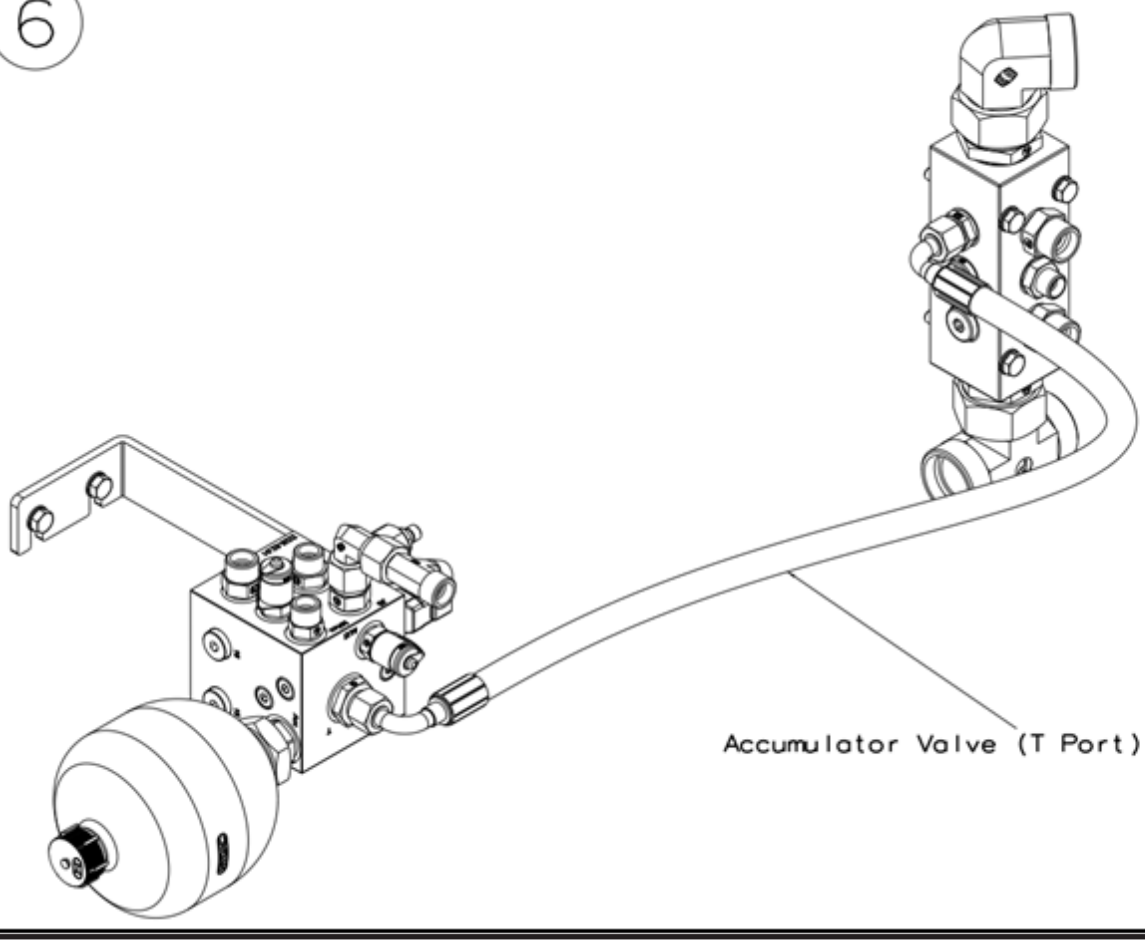

Accumulator Valve (T Port) to Collector

Removal

1. Park the machine on a firm, level surface, level the machine, fully retract the boom, lower the boom, place the transmission in (N) NEUTRAL, engage the park brake and shut the engine OFF.
2. Place a Do Not Operate Tag on both the ignition key switch and the steering wheel.
3. Open the engine cover. Allow the system fluids to cool.
4. Properly disconnect the battery. *Refer to Section — Battery*, for procedure.
5. Remove the frame cover (**1**).

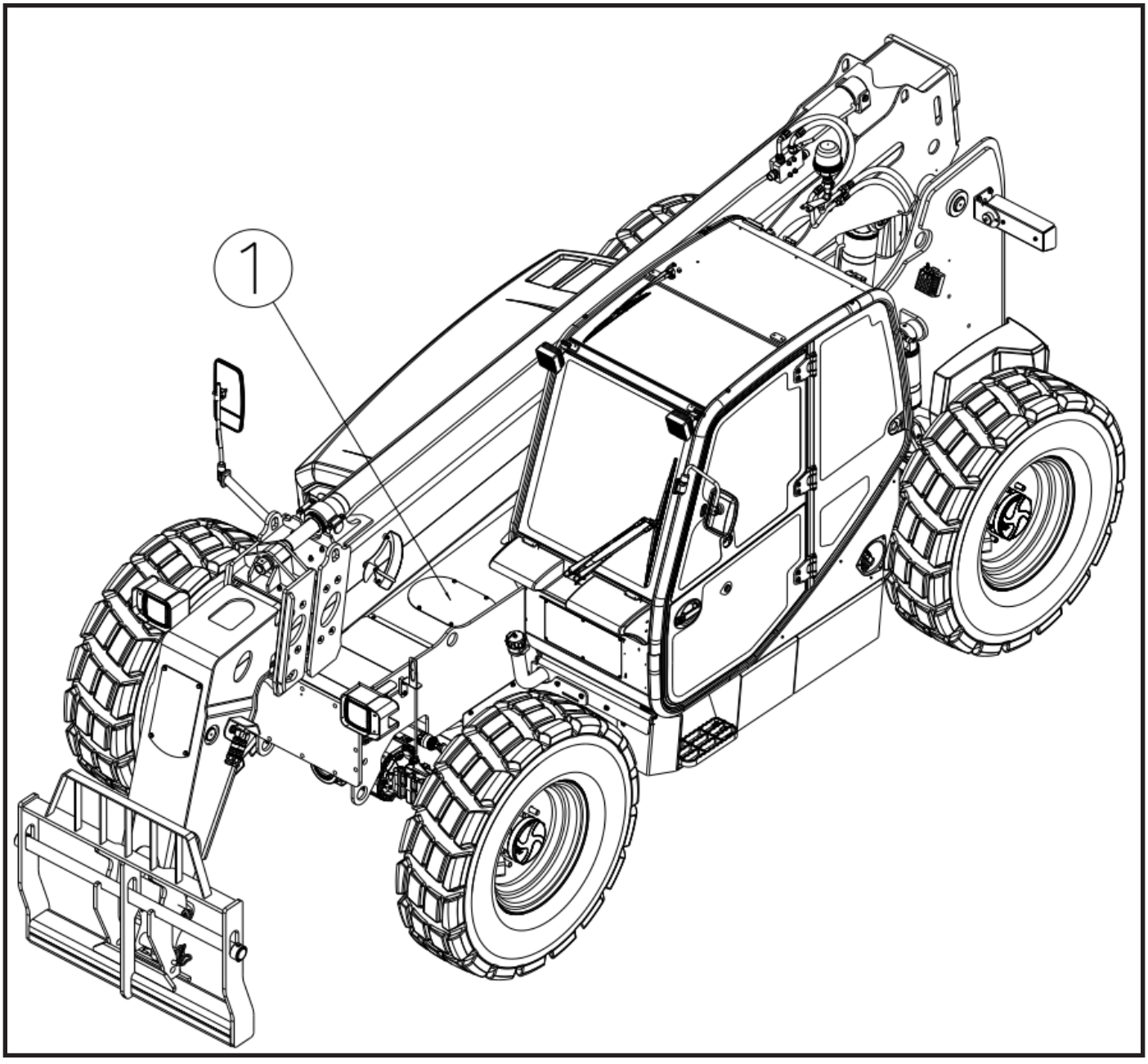

6. There are five Hydraulic Hoses on the Accumulator Valve. Remove the those hoses (**2**).
7. Remove the Accumulator Valves Bracket (**3**).

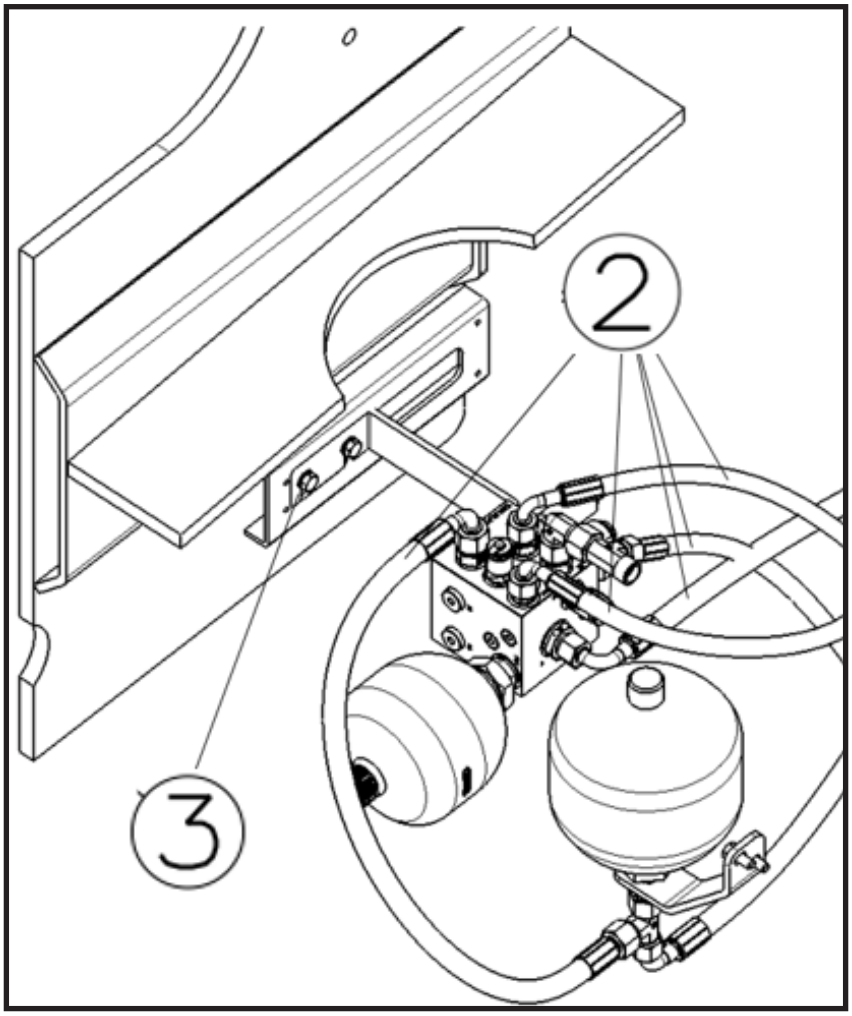

8. Remove the Accumulator Valve.

Hydraulic Accumulator Replacement

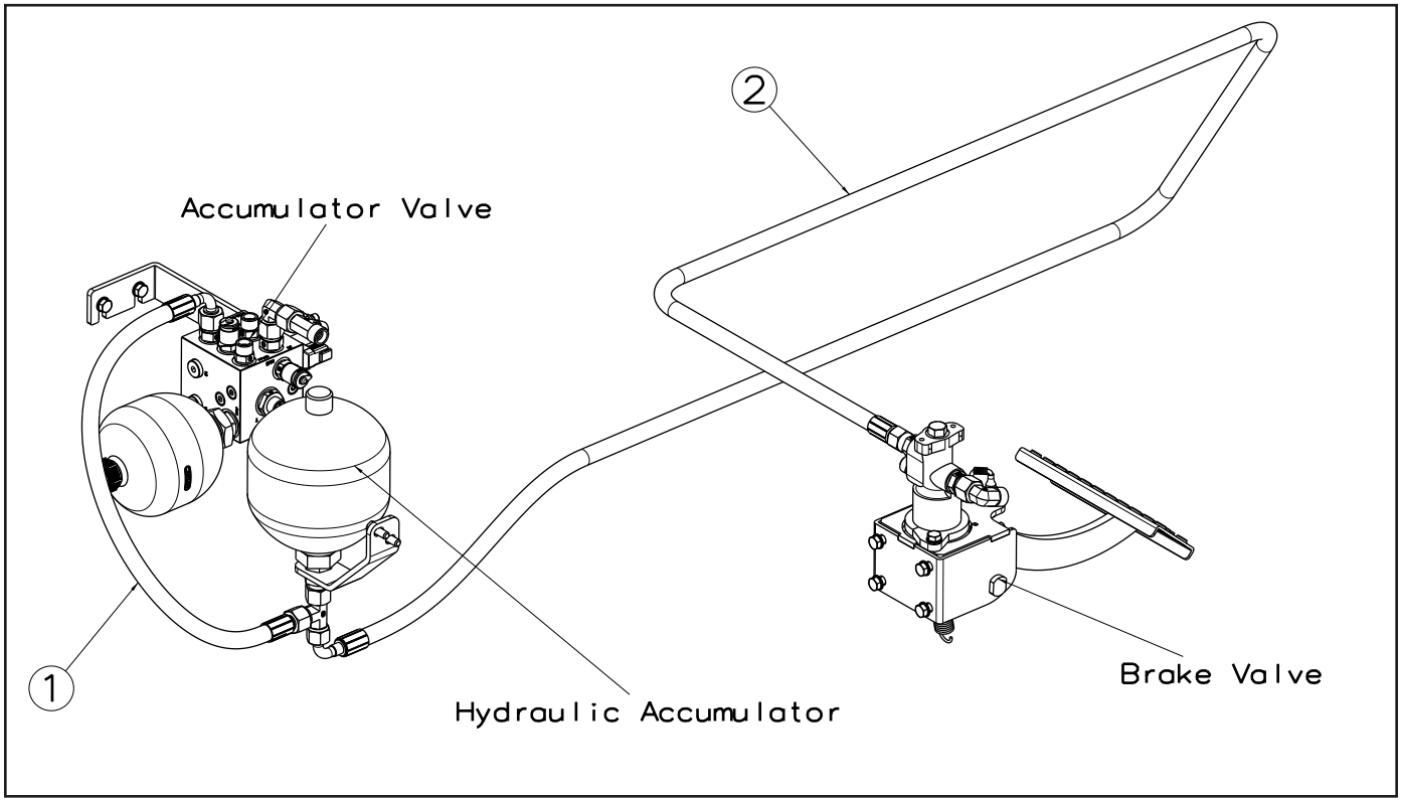

HYDRAULIC HOSES	
1	Hydraulic Accumulator to Brake Valve
2	Hydraulic Accumulator to Brake Valve Accumulator Valve (F Port)

Removal

1. Park the machine on a firm, level surface, level the machine, fully retract the boom, lower the boom, place the transmission in (N) NEUTRAL, engage the park brake and shut the engine OFF.
2. Place a Do Not Operate Tag on both the ignition key switch and the steering wheel.
3. Open the engine cover. Allow the system fluids to cool.
4. Properly disconnect the battery. *Refer to Section — Battery*, for procedure.
5. Remove the belly pan (**1**).

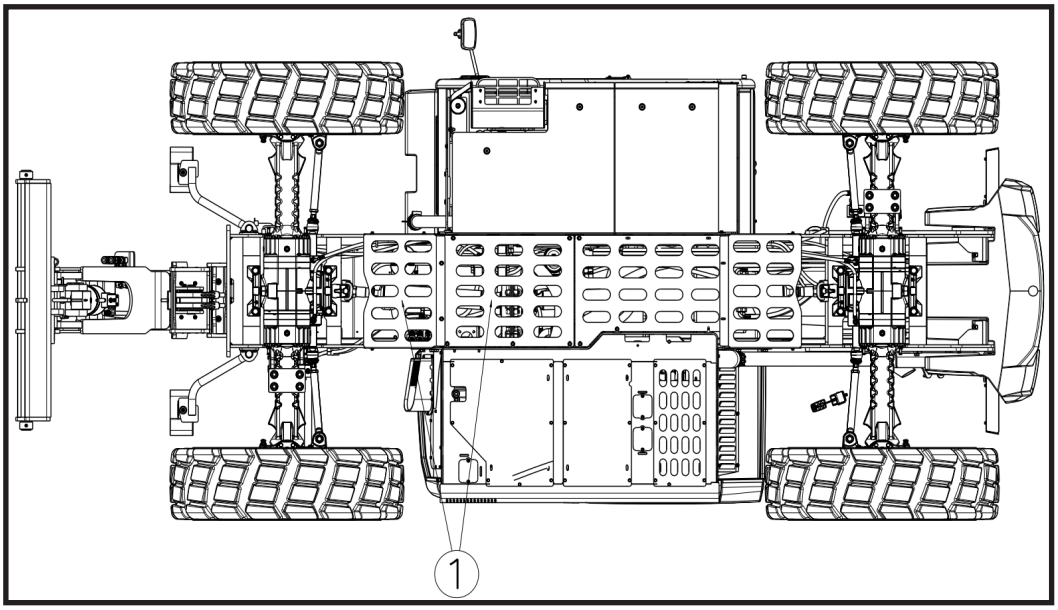

6. There are two Hydraulic Hoses on the Hydraulic Accumulator. Remove the those hoses (**2**).

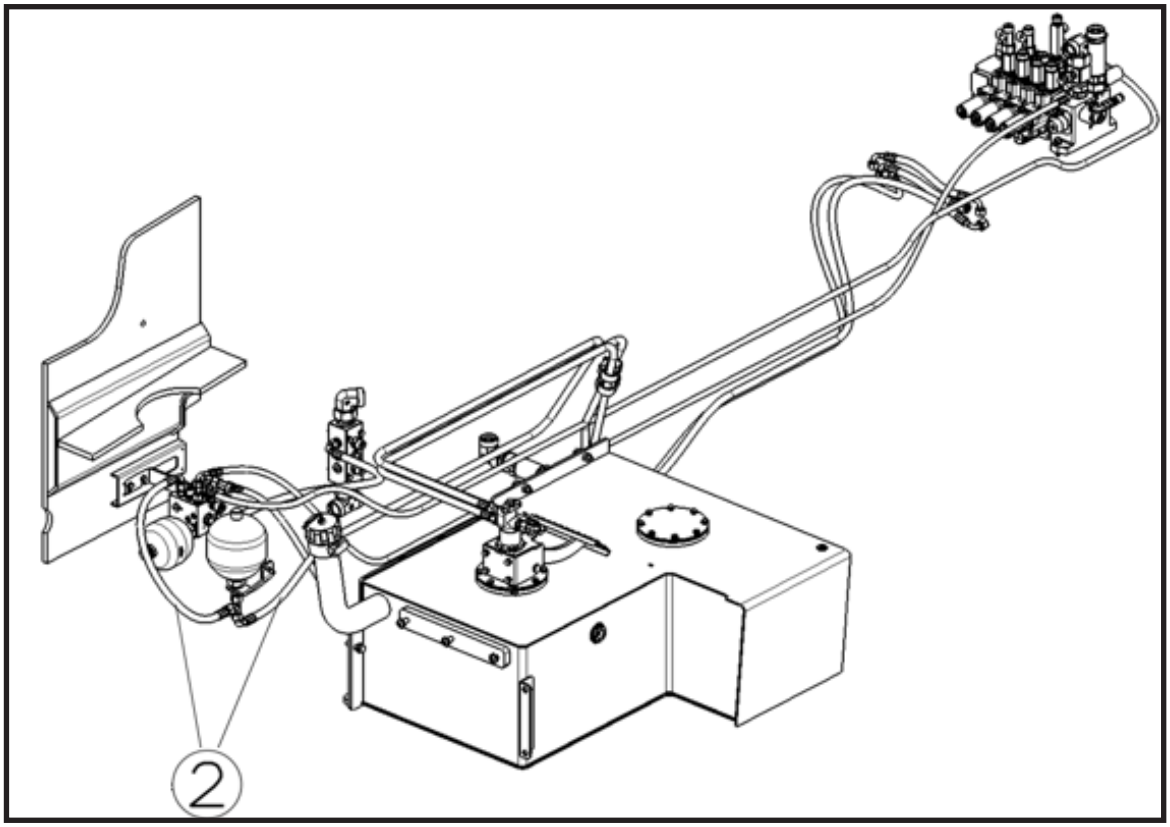

7. Remove the Hydraulic Accumulators Bracket (**3**).

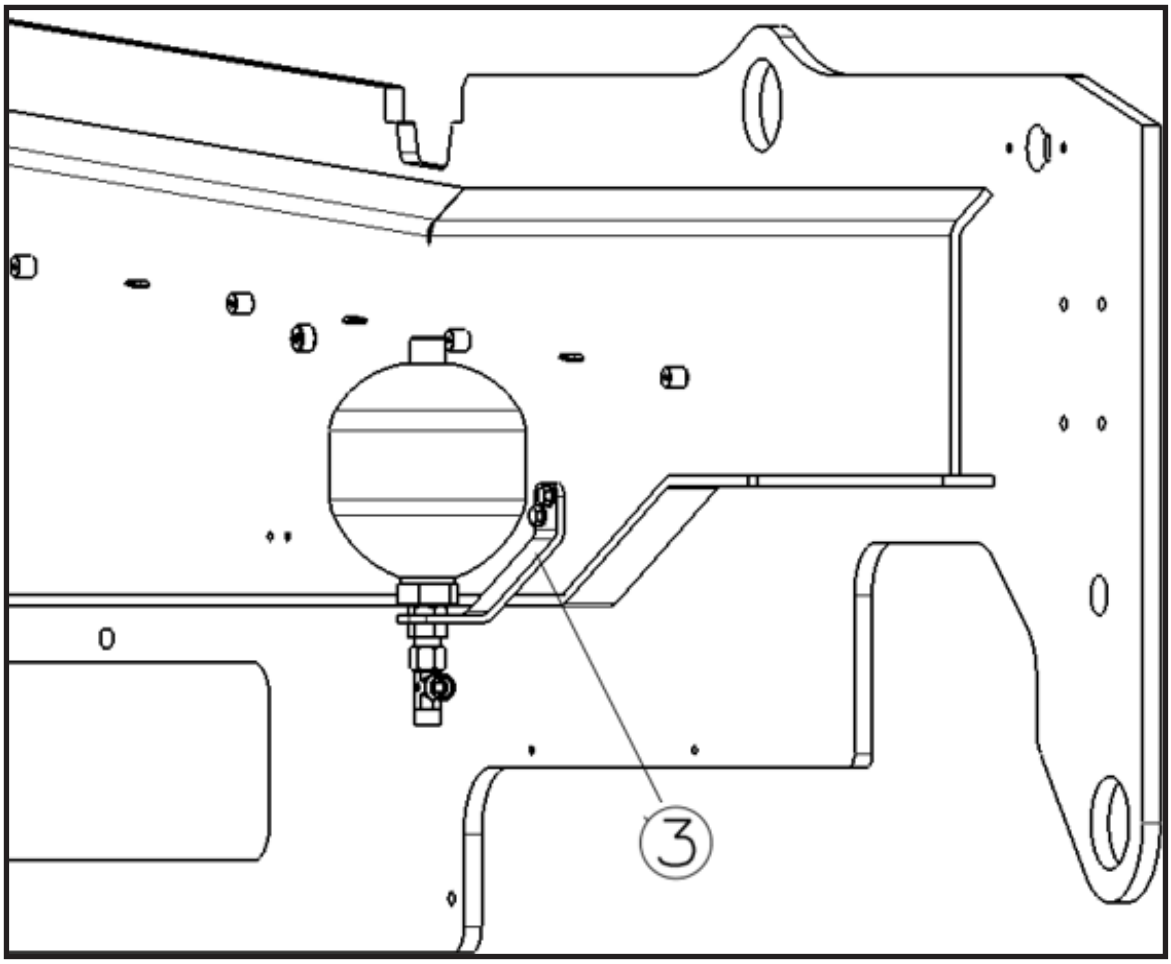

8. Remove the Hydraulic Accumulator.

Quick Coupling Replacement
Removal

1. Park the machine on a firm, level surface, level the machine, fully retract the boom, lower the boom, place the transmission in (N) NEUTRAL, engage the park brake and shut the engine OFF.
2. Place a Do Not Operate Tag on both the ignition key switch and the steering wheel.
3. Open the engine cover. Allow the system fluids to cool.
4. Properly disconnect the battery. *Refer to Section — Battery*, for procedure
5. Remove the Service Gate (**1**).

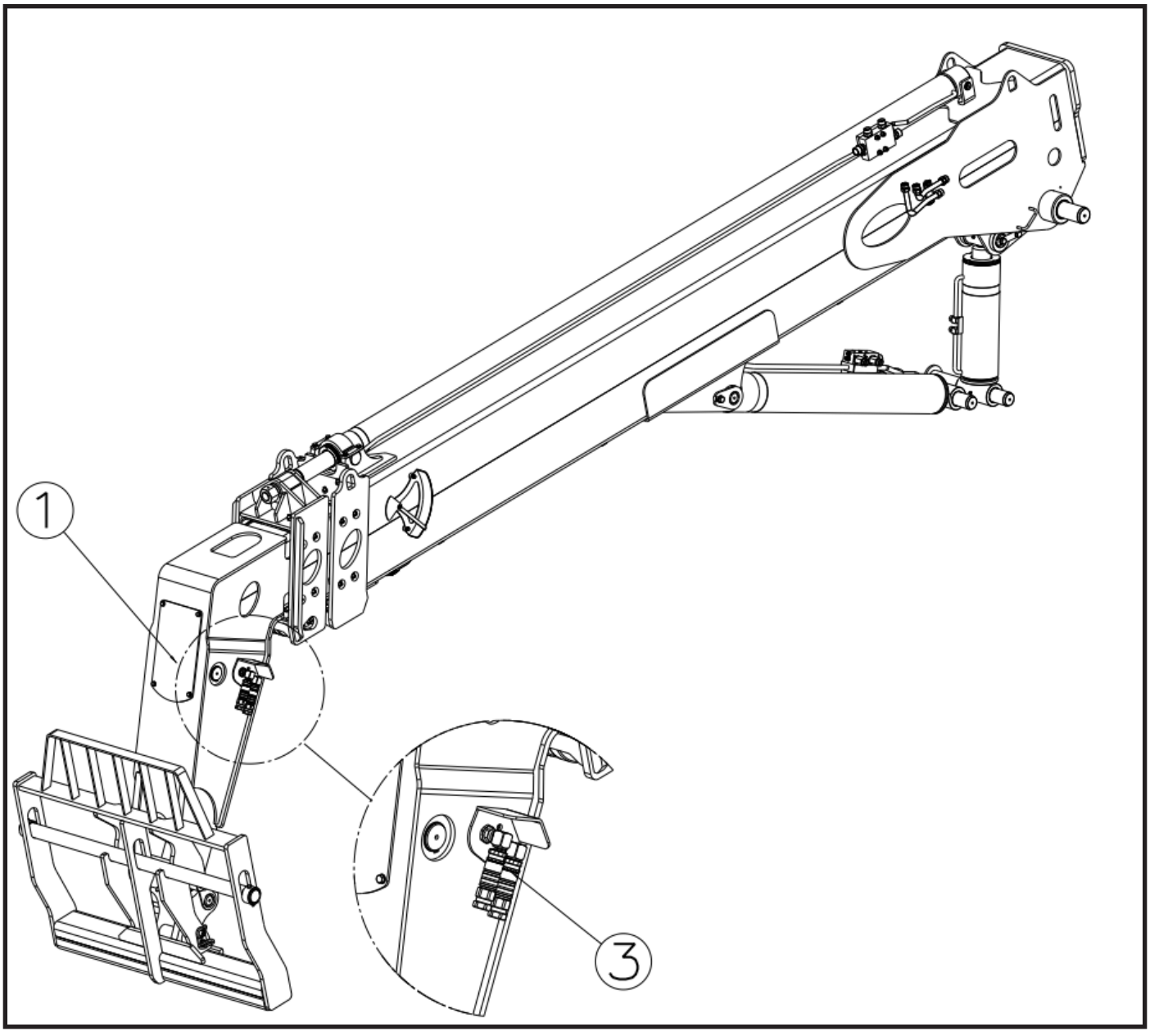

6. Remove the hoses (**2**).
7. Remove the Quick Coupler Assembly (**3**).

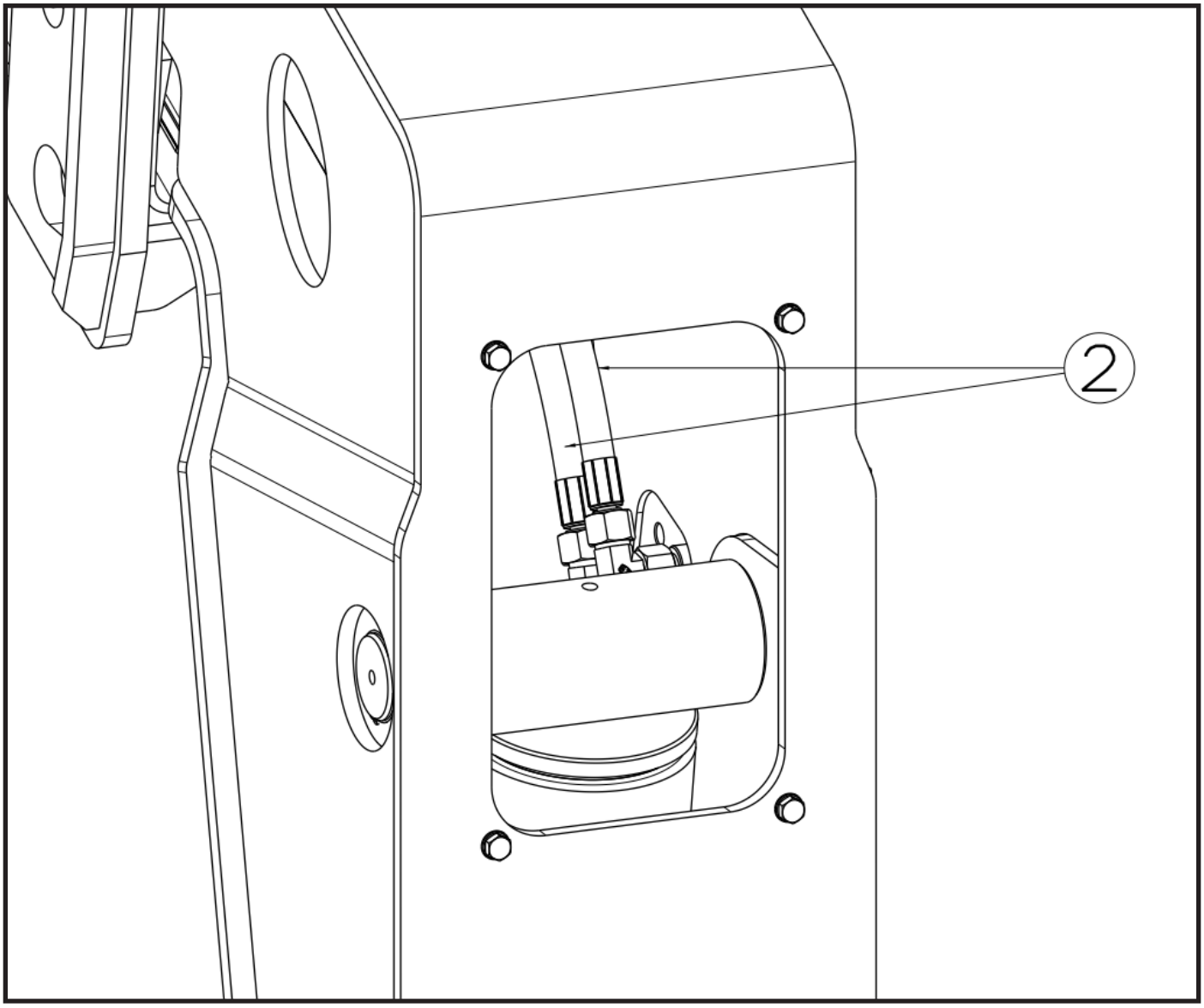

Installation

To install, reverse the removal procedure.

Compensator Valve Replacement

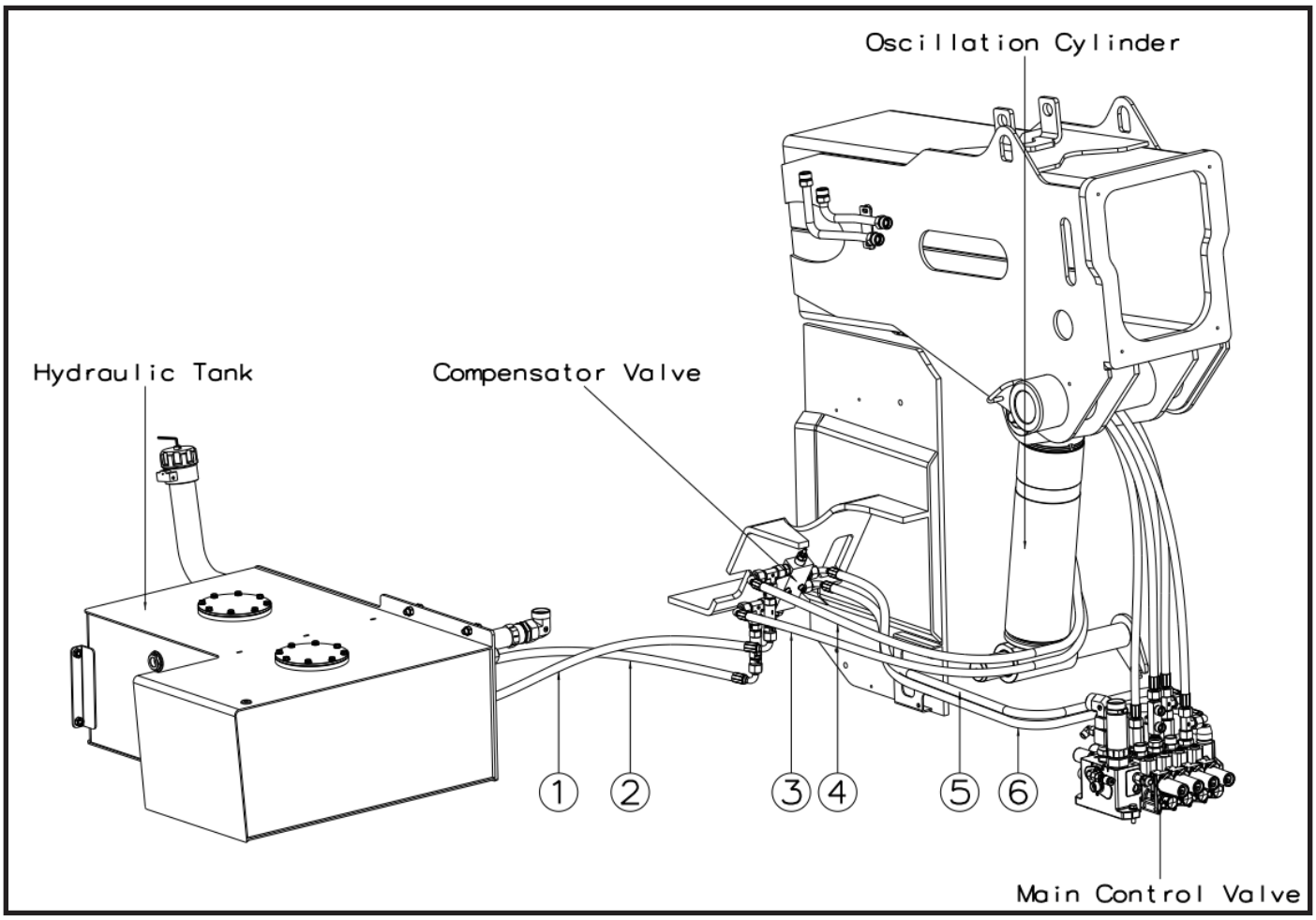

HYDRAULIC HOSES	
1	Hydraulic Tank to Compensator Valve (V2 Port)
2	Hydraulic Tank to Compensator Valve (V1 Port)
3	Compensator Valve (V1 Port) to Oscillation Cylinder
4	Compensator Valve (V2 Port) to Oscillation Cylinder
5	Compensator Valve (C2 Port) to Main Control Valve (Extension B Port)
6	Compensator Valve (C1 Port) to Main Control Valve (Extension A Port)

Removal

1. Park the machine on a firm, level surface, level the machine, fully retract the boom, lower the boom, place the transmission in (N) NEUTRAL, engage the park brake and shut the engine OFF.
2. Place a Do Not Operate Tag on both the ignition key switch and the steering wheel.
3. Open the engine cover. Allow the system fluids to cool.
4. Properly disconnect the battery. *Refer to Section — Battery*, for procedure.
5. Remove the belly pan (**1**).

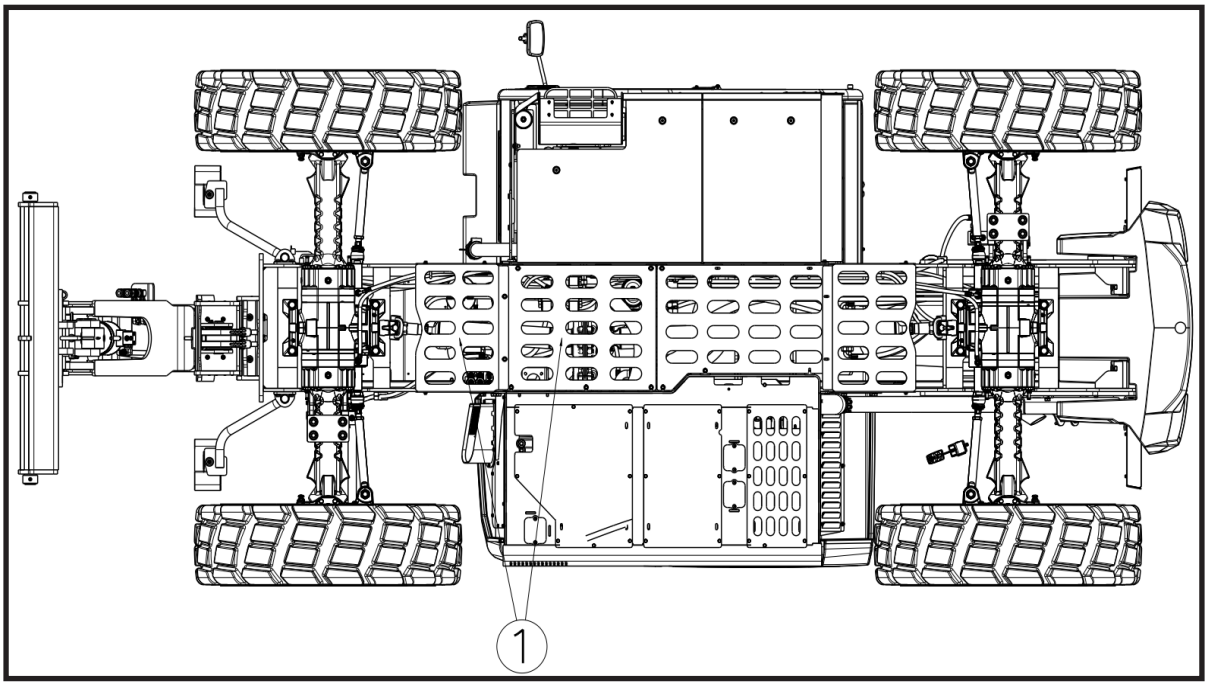

6. Remove the hoses (**2**).

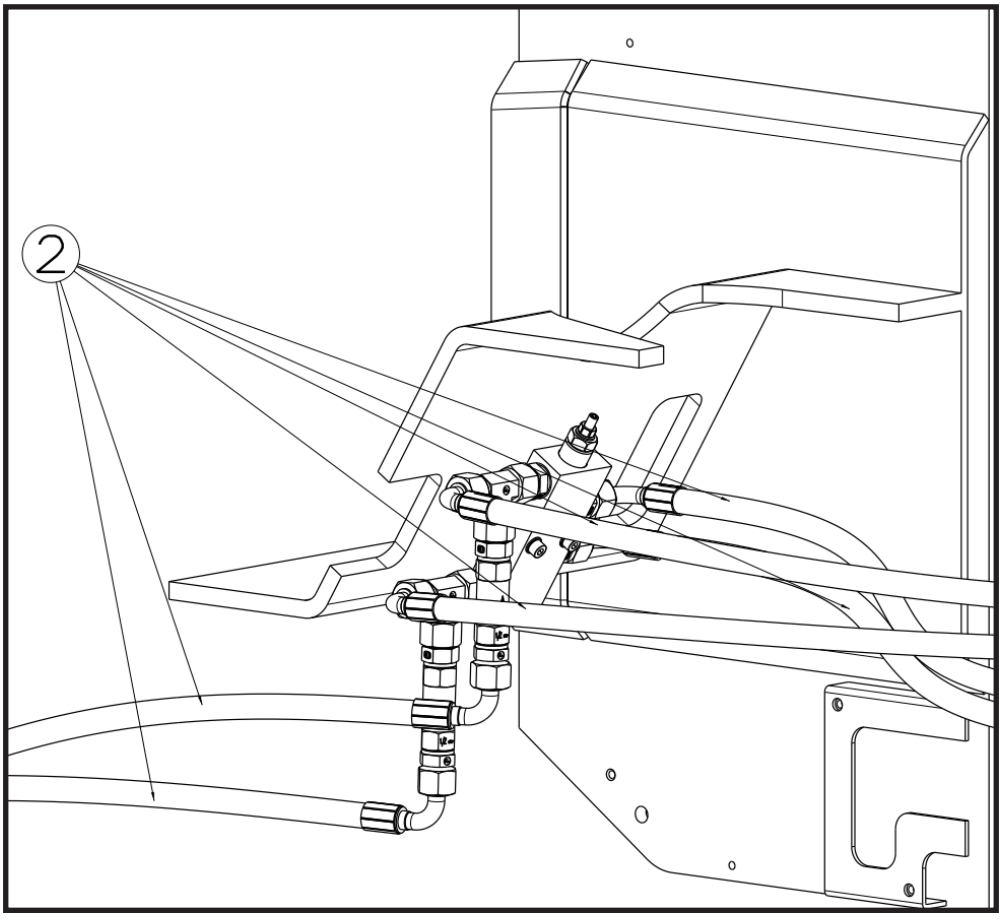

7. Remove the connection bolts (**3**) and remove the Compensator Valve.

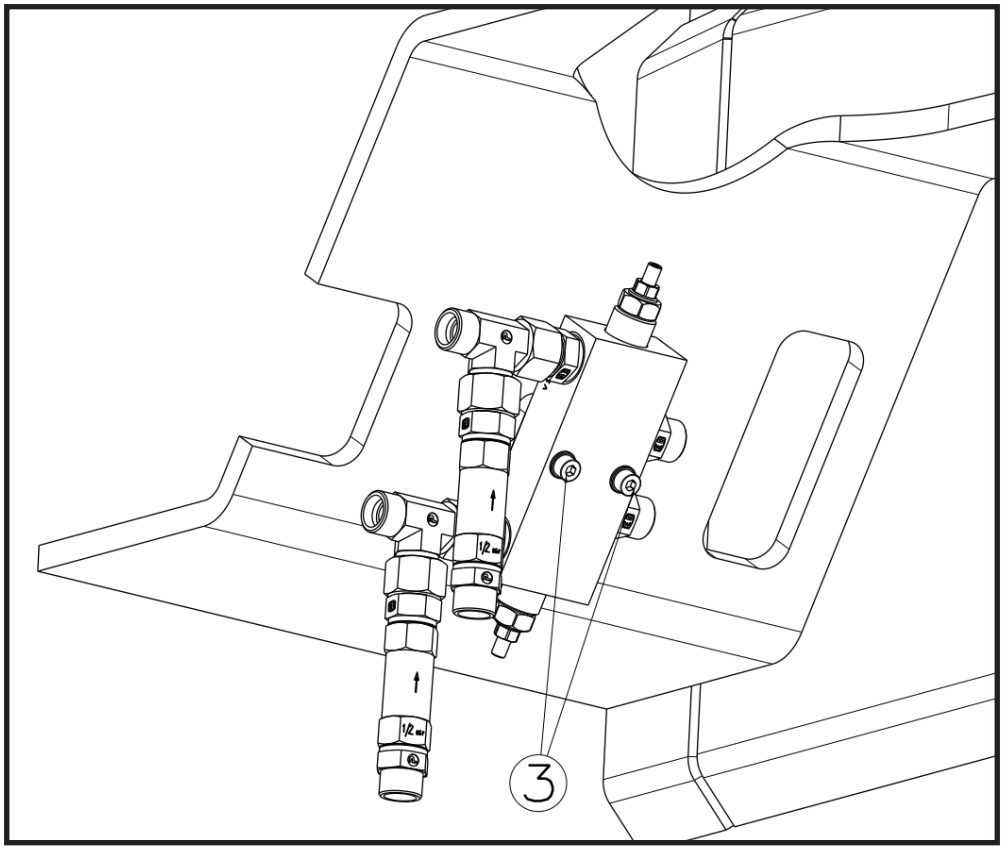

Installation

To install, reverse the removal procedure.

Collecting Collector Replacement

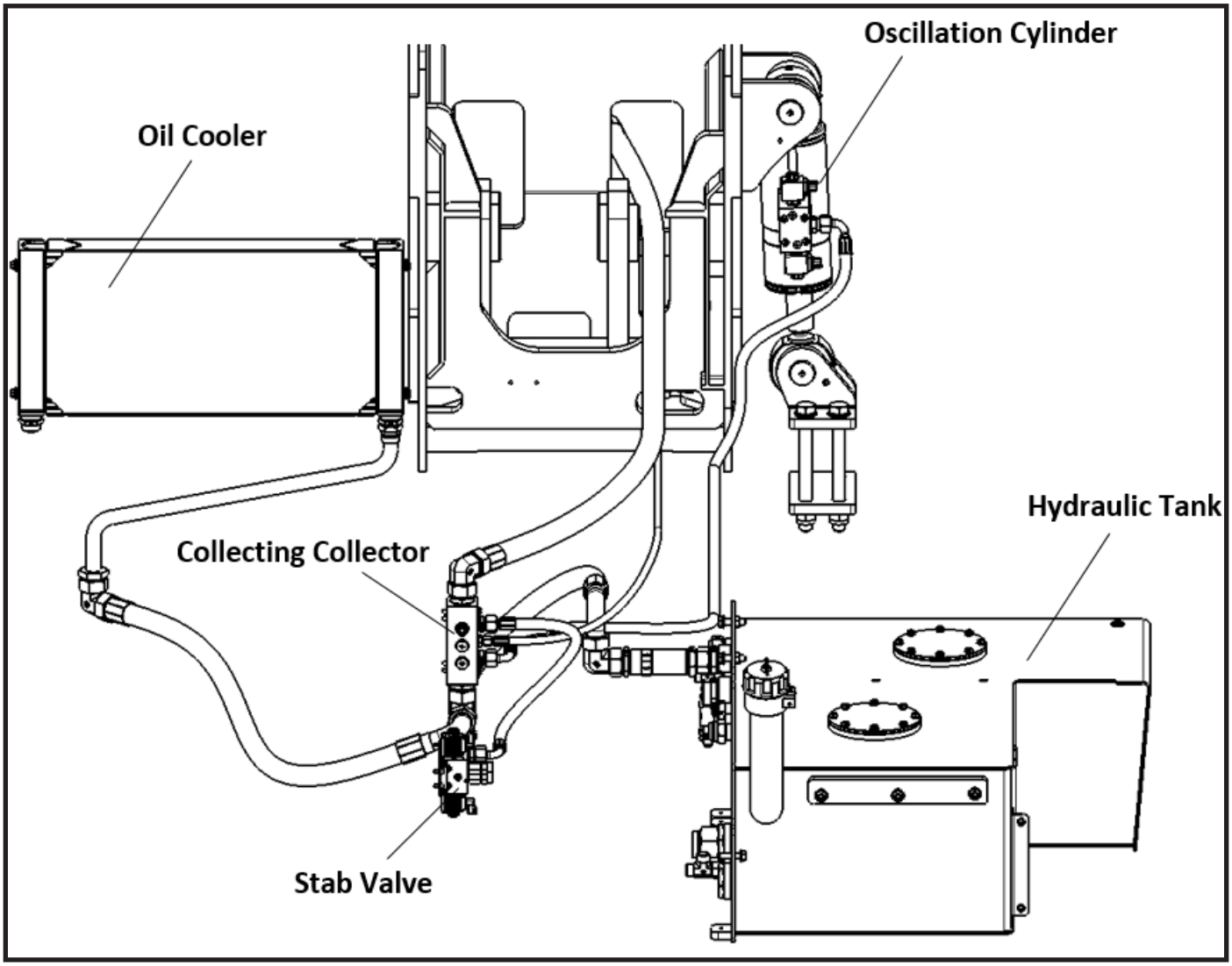

Removal

1. Park the machine on a firm, level surface, level the machine, fully retract the boom, lower the boom, place the transmission in (N) NEUTRAL, engage the park brake and shut the engine OFF.
2. Place a Do Not Operate Tag on both the ignition key switch and the steering wheel.
3. Open the engine cover. Allow the system fluids to cool.
4. Properly disconnect the battery. *Refer to Section — Battery*, for procedure.
5. Remove the Belly Pan (**1**).

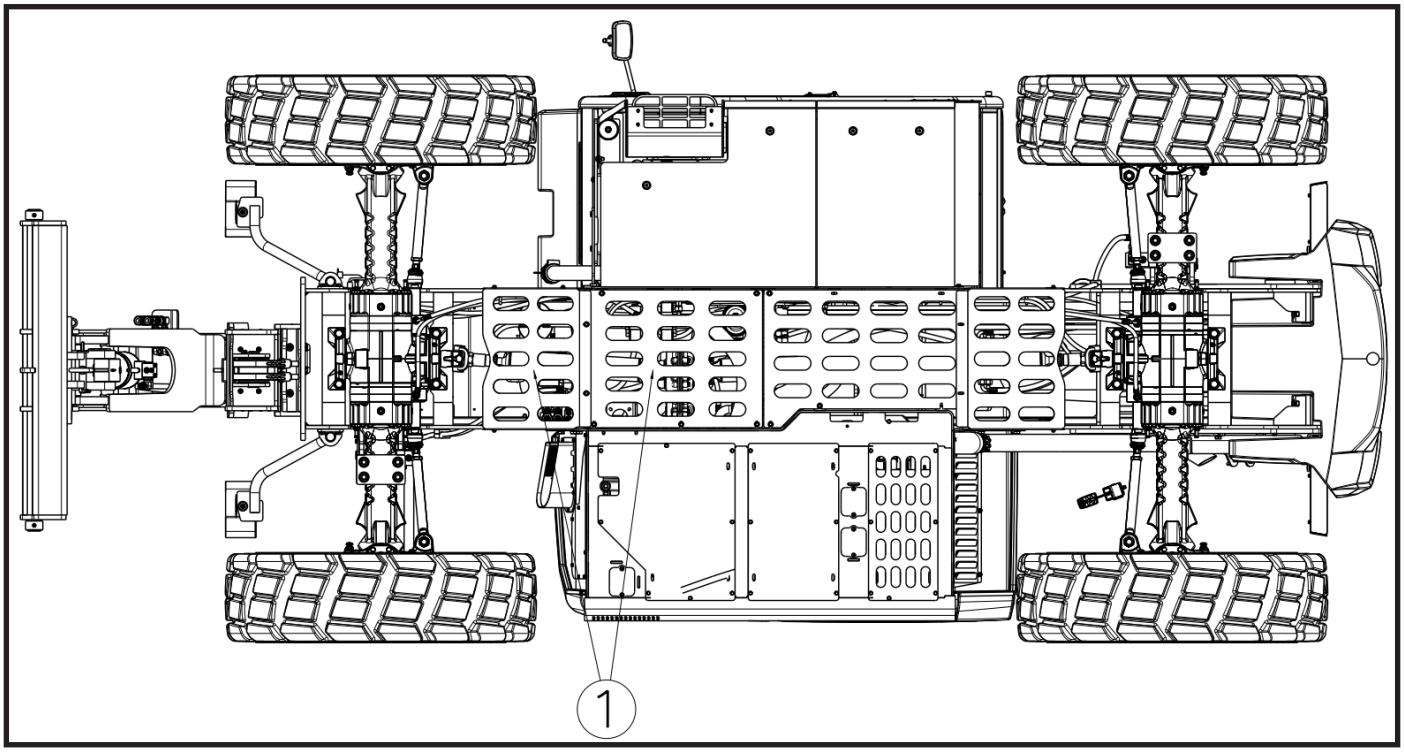

6. Remove the Service Gate (**2**).

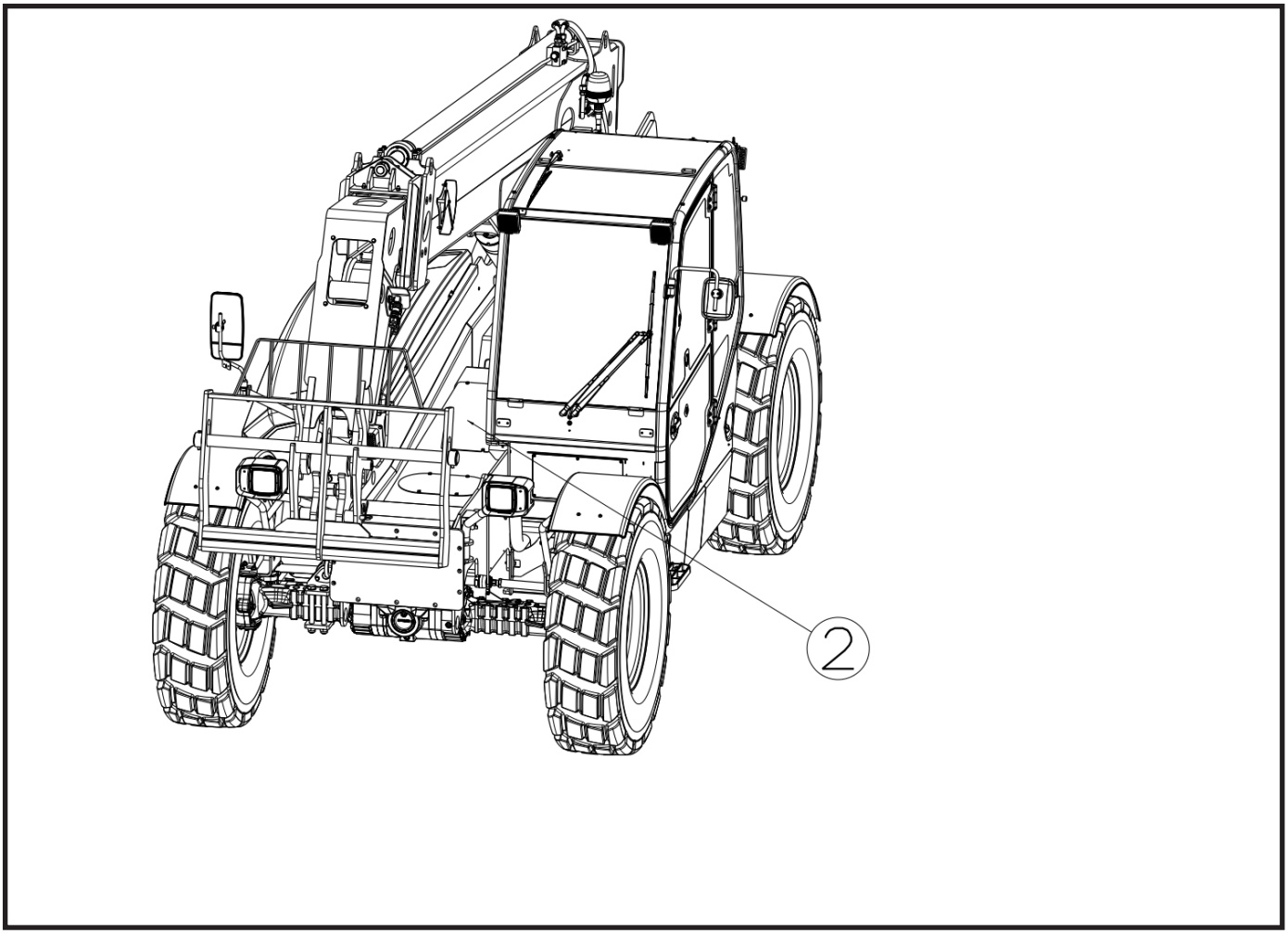

7. Remove the Hydraulic Hoses (**3**).

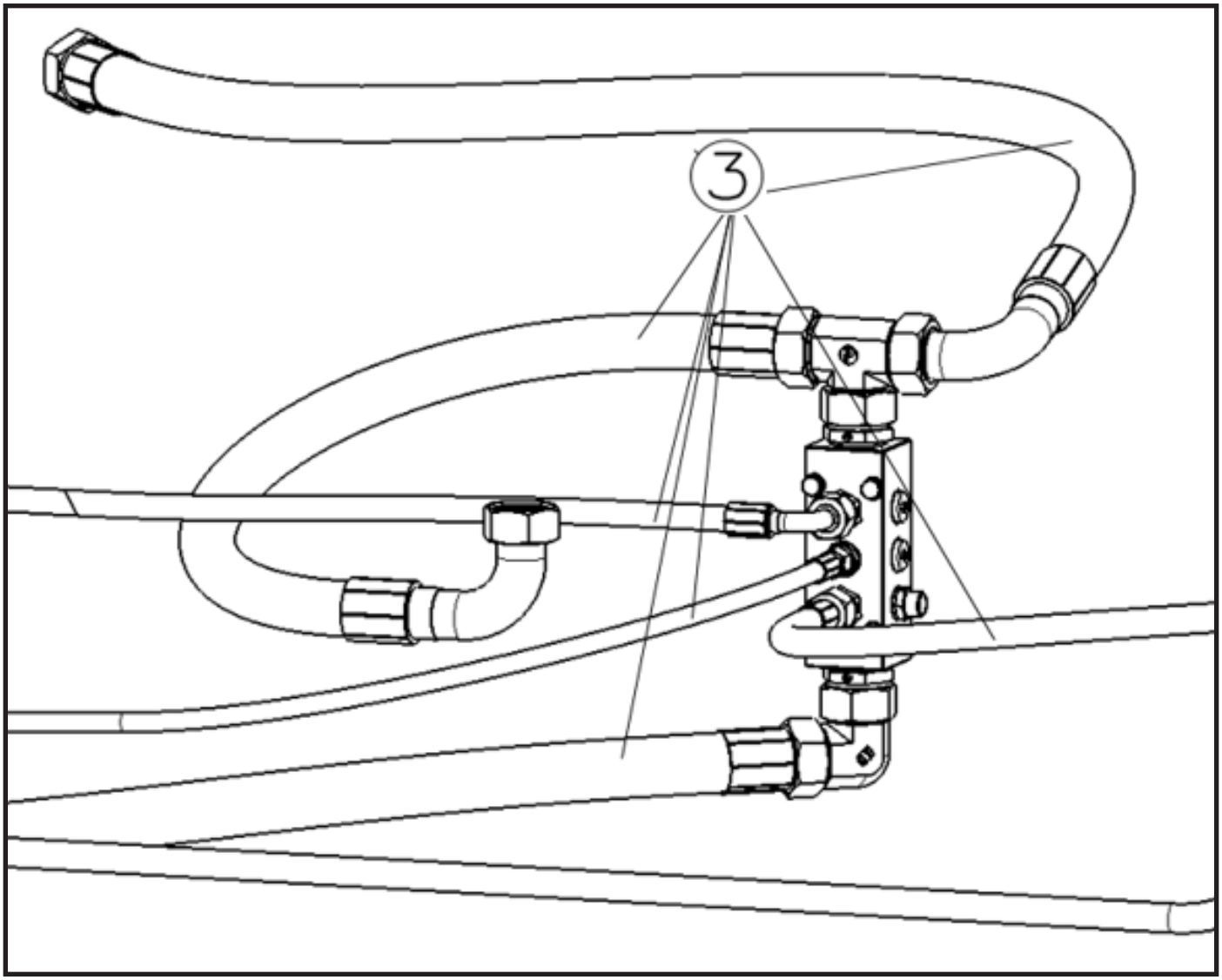

1. Remove the valve by unscrewing the connecting bolts.

Installation

To install, reverse the removal procedure.

Steering Unit Assembly

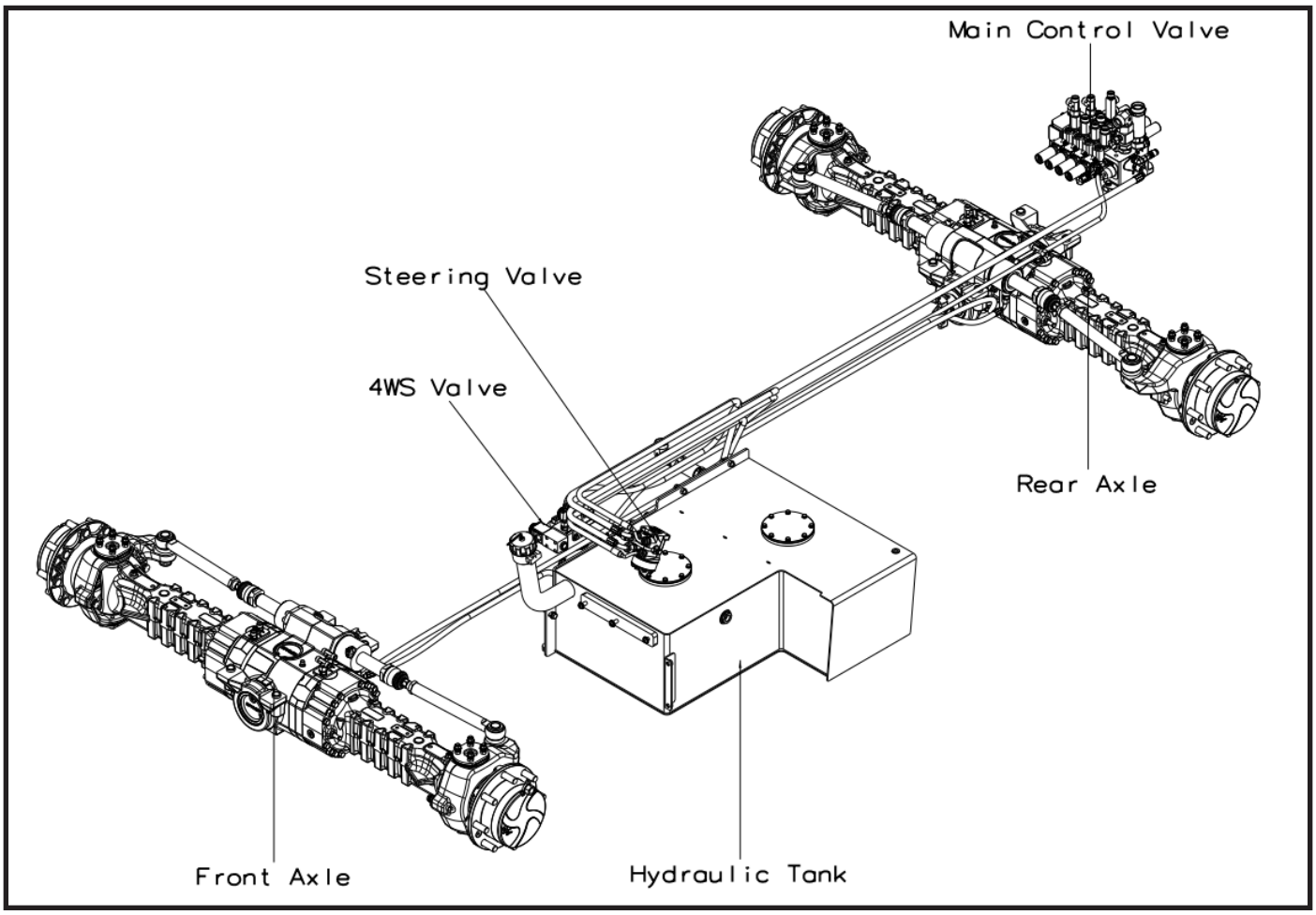

Removal

1. Park the machine on a firm, level surface, level the machine, fully retract the boom, lower the boom, place the transmission in (N) NEUTRAL, engage the park brake and shut the engine OFF.
2. Place a Do Not Operate Tag on both the ignition key switch and the steering wheel.
3. Open the engine cover. Allow the system fluids to cool.
4. Properly disconnect the battery. Refer to Section — Battery, for procedure.

5. Remove the cab front cover (**1**).

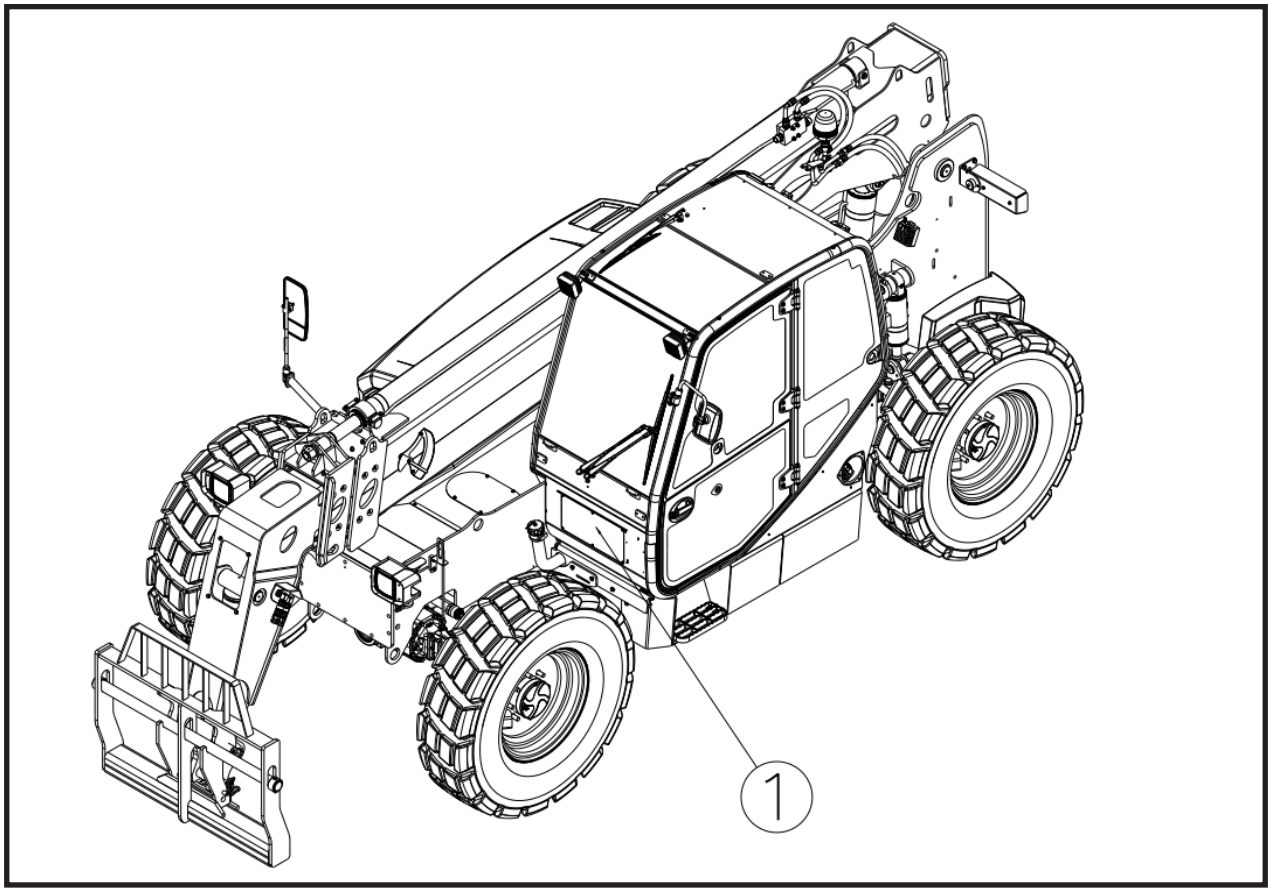

6. Remove the Hydraulic Hoses (**2**).

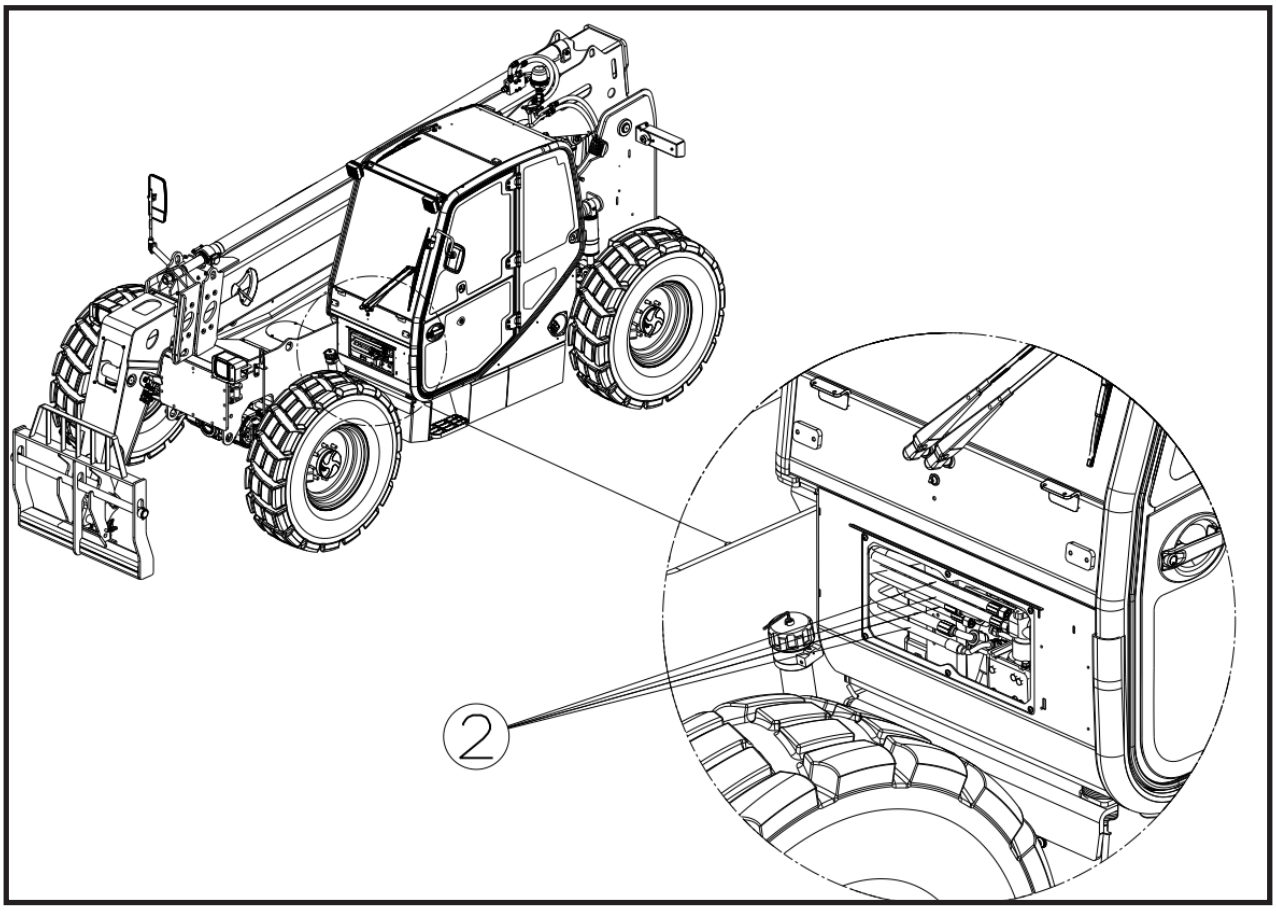

Hydraulic Hoses

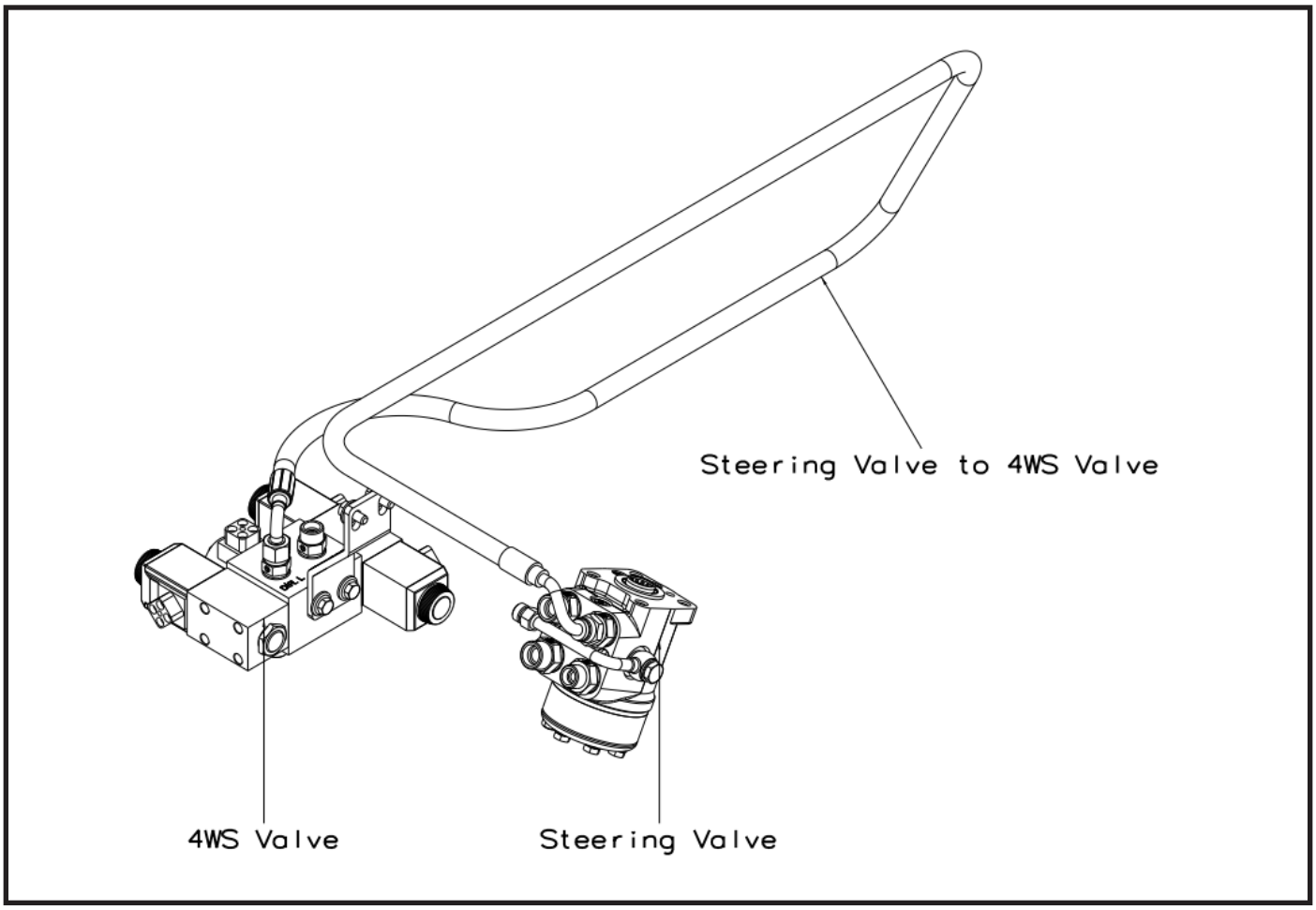

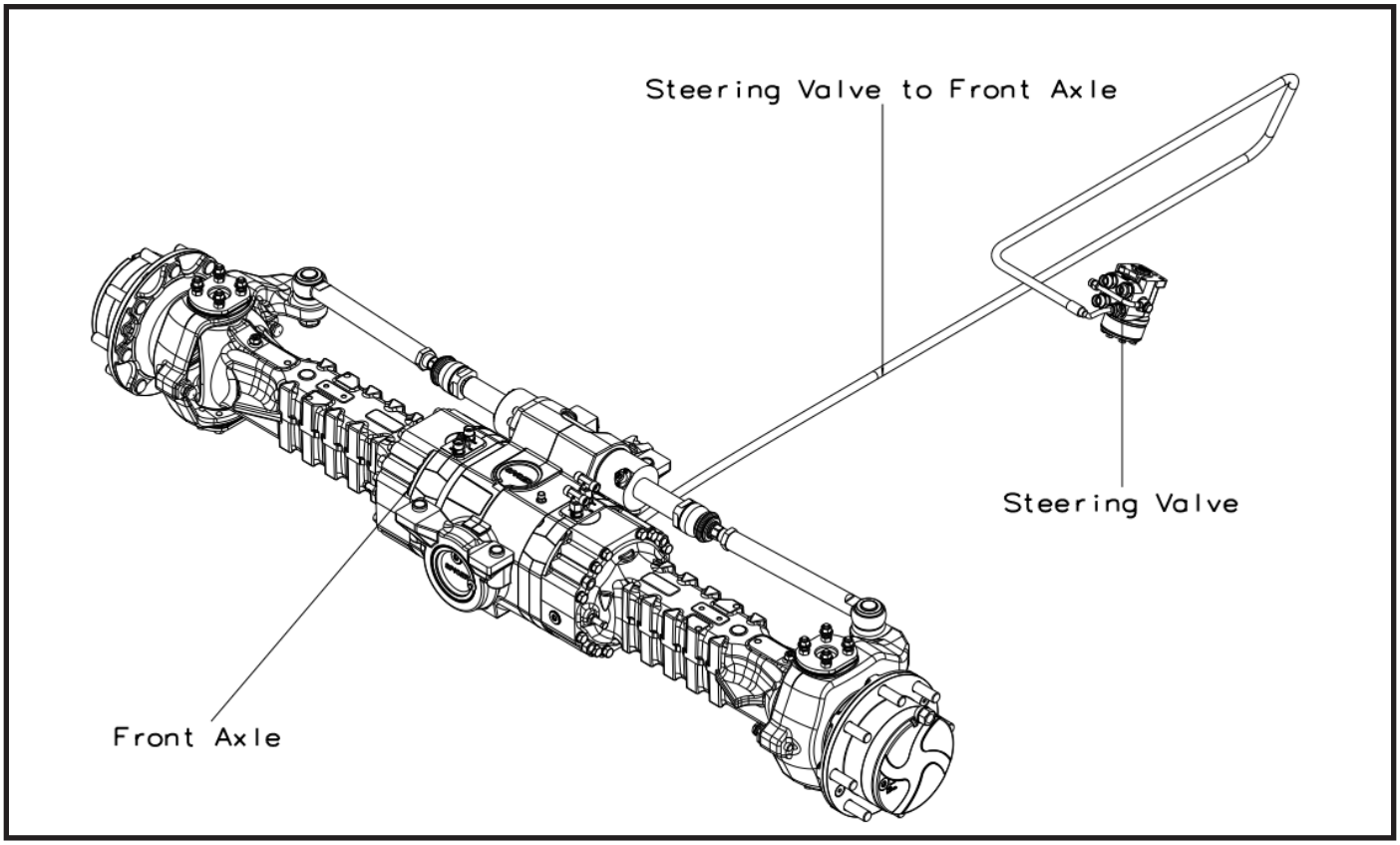
Steering Valve to Front Axle
Steering Valve
Front Axle

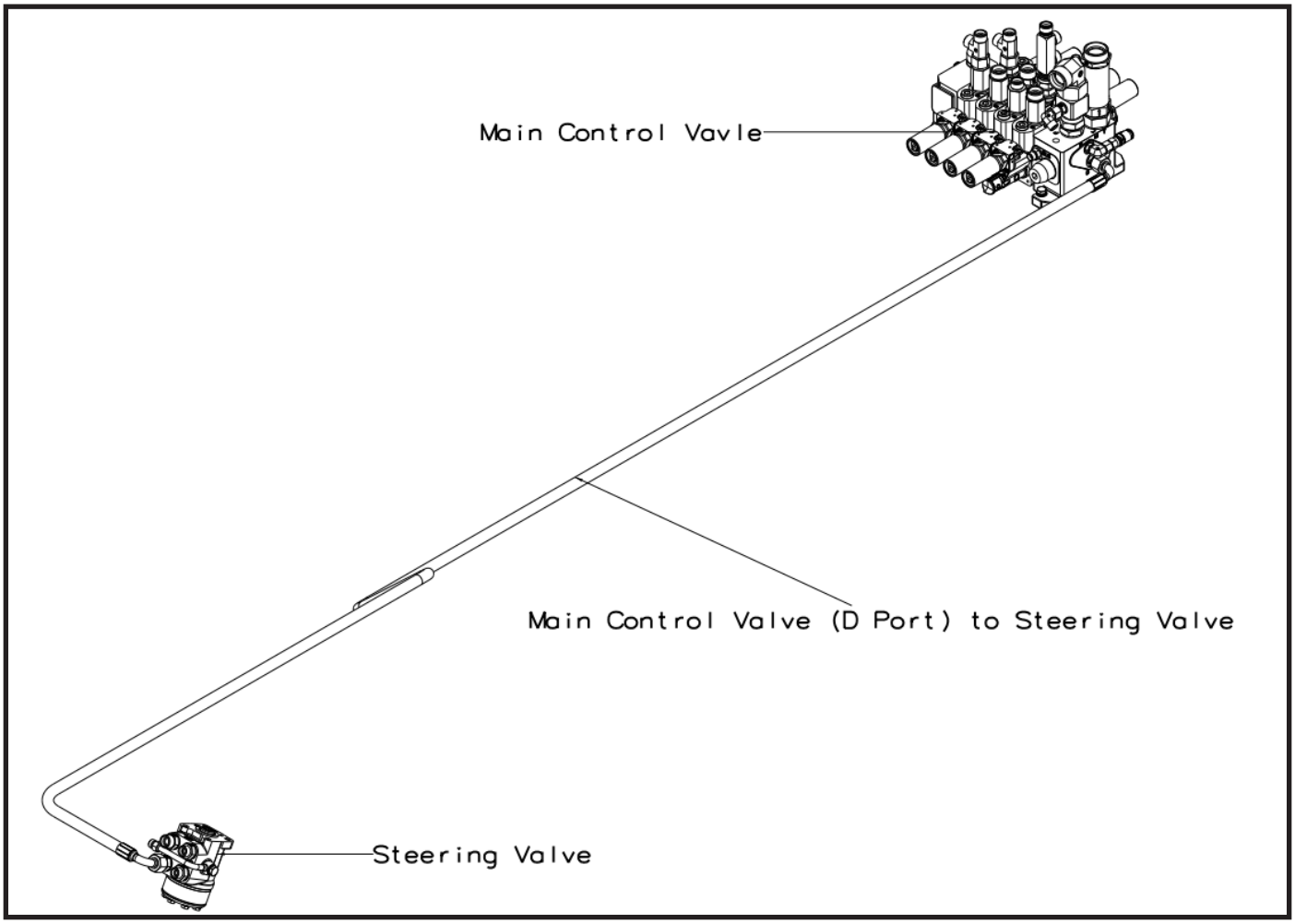
Main Control Vavle
Main Control Valve (D Port) to Steering Valve
Steering Valve

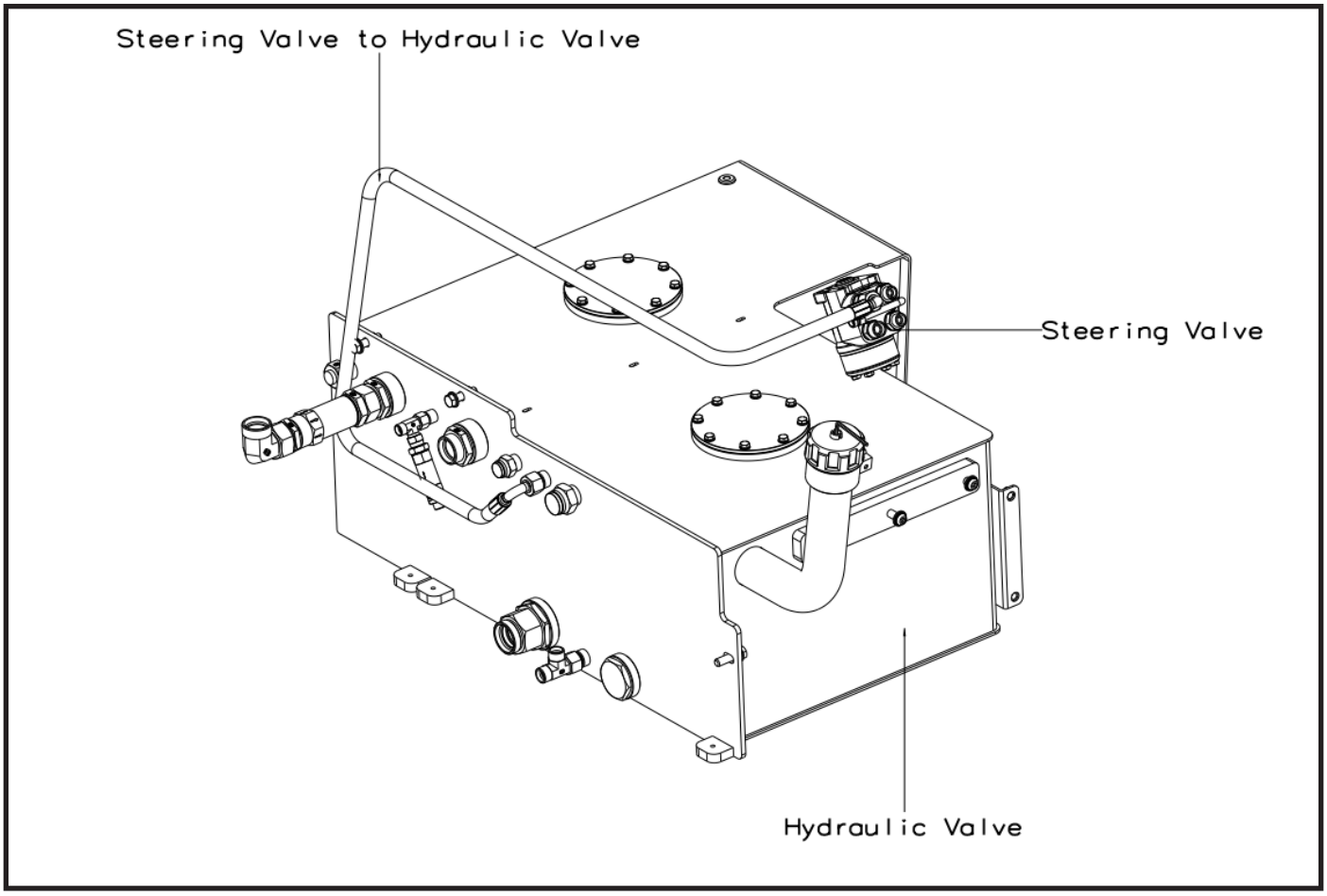
Steering Valve to Hydraulic Valve
Steering Valve
Hydraulic Valve

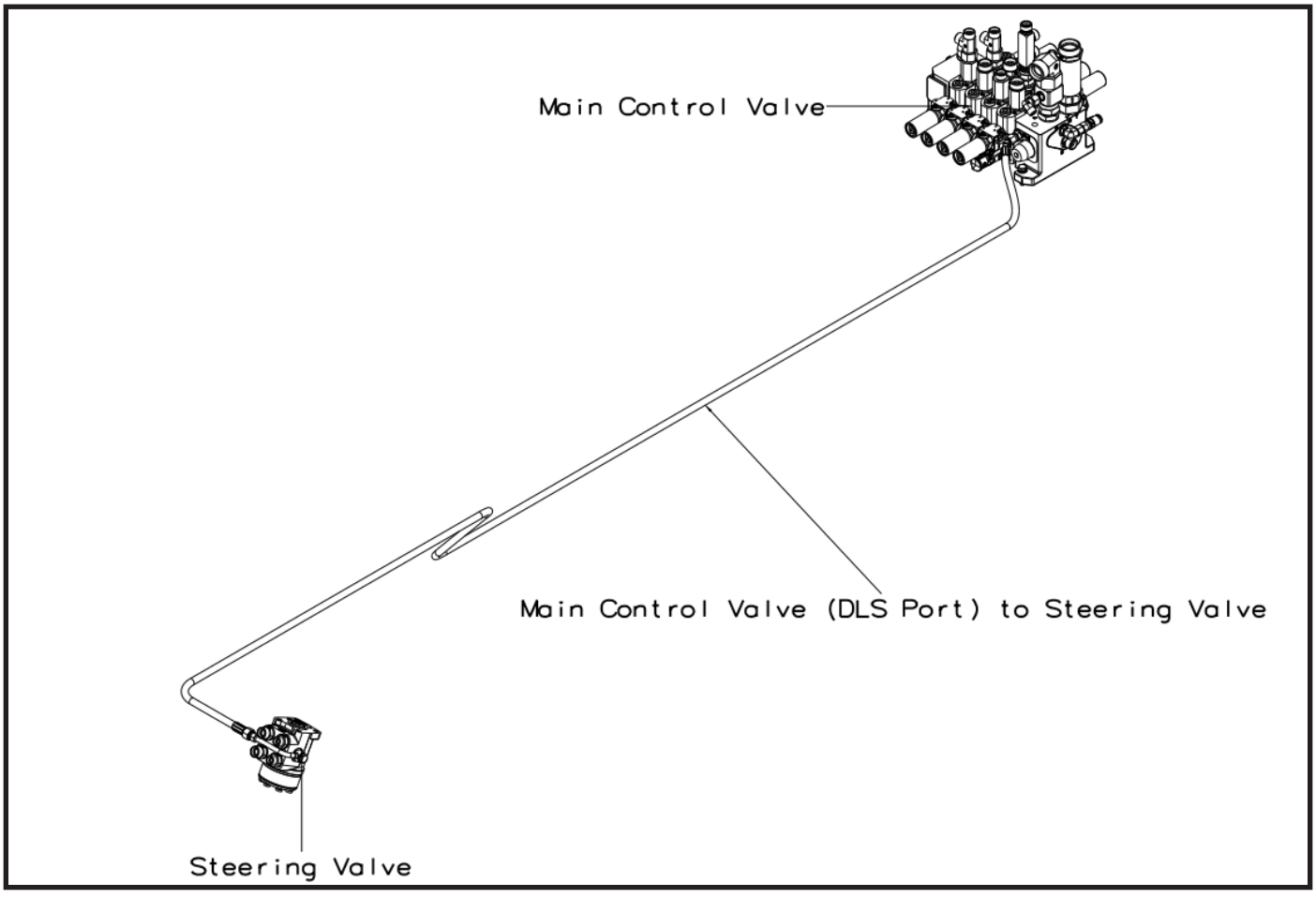
Main Control Valve
Main Control Valve (DLS Port) to Steering Valve
Steering Valve

7. Remove the connection bolts (**4**).

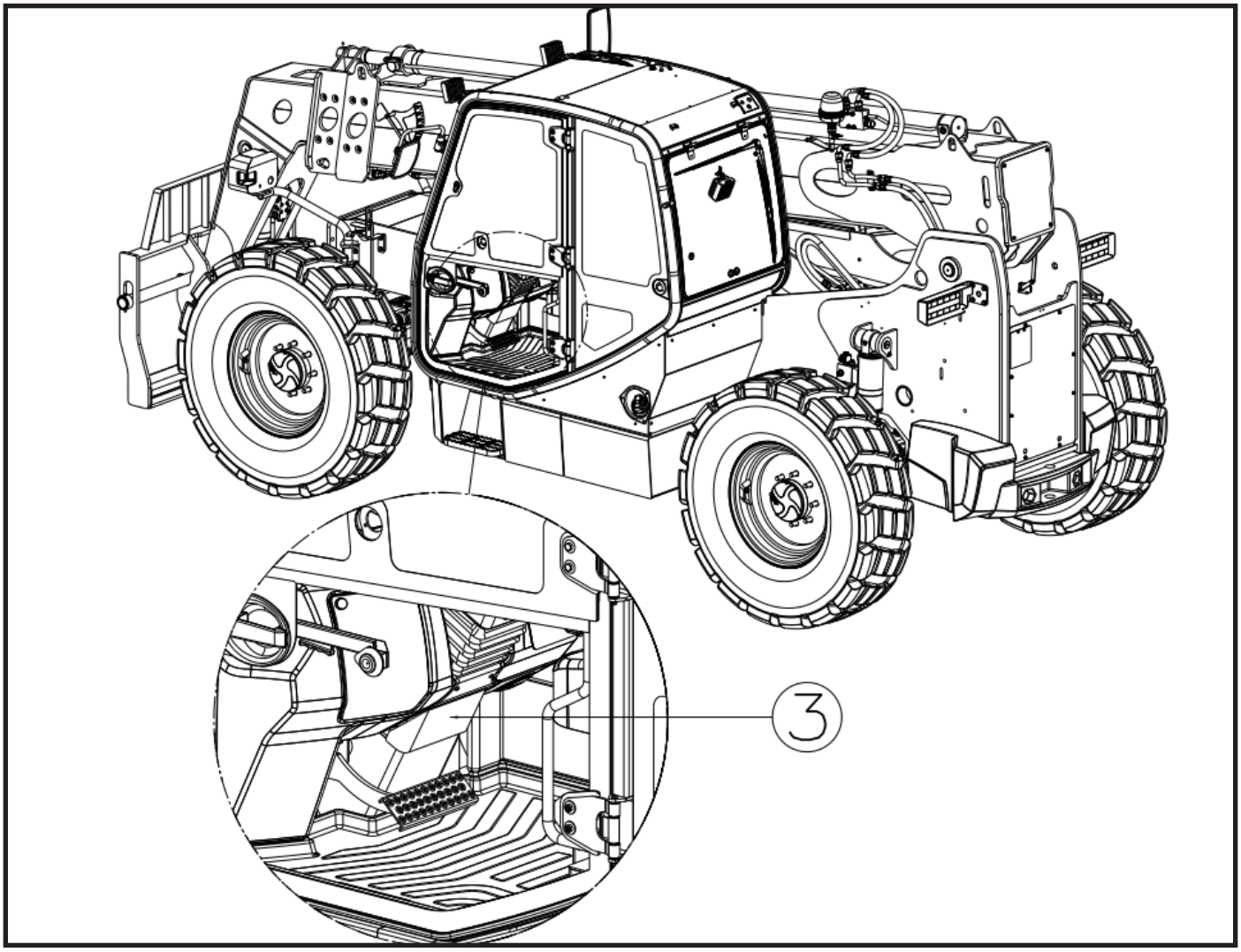

8. Remove the connection bolts (4).

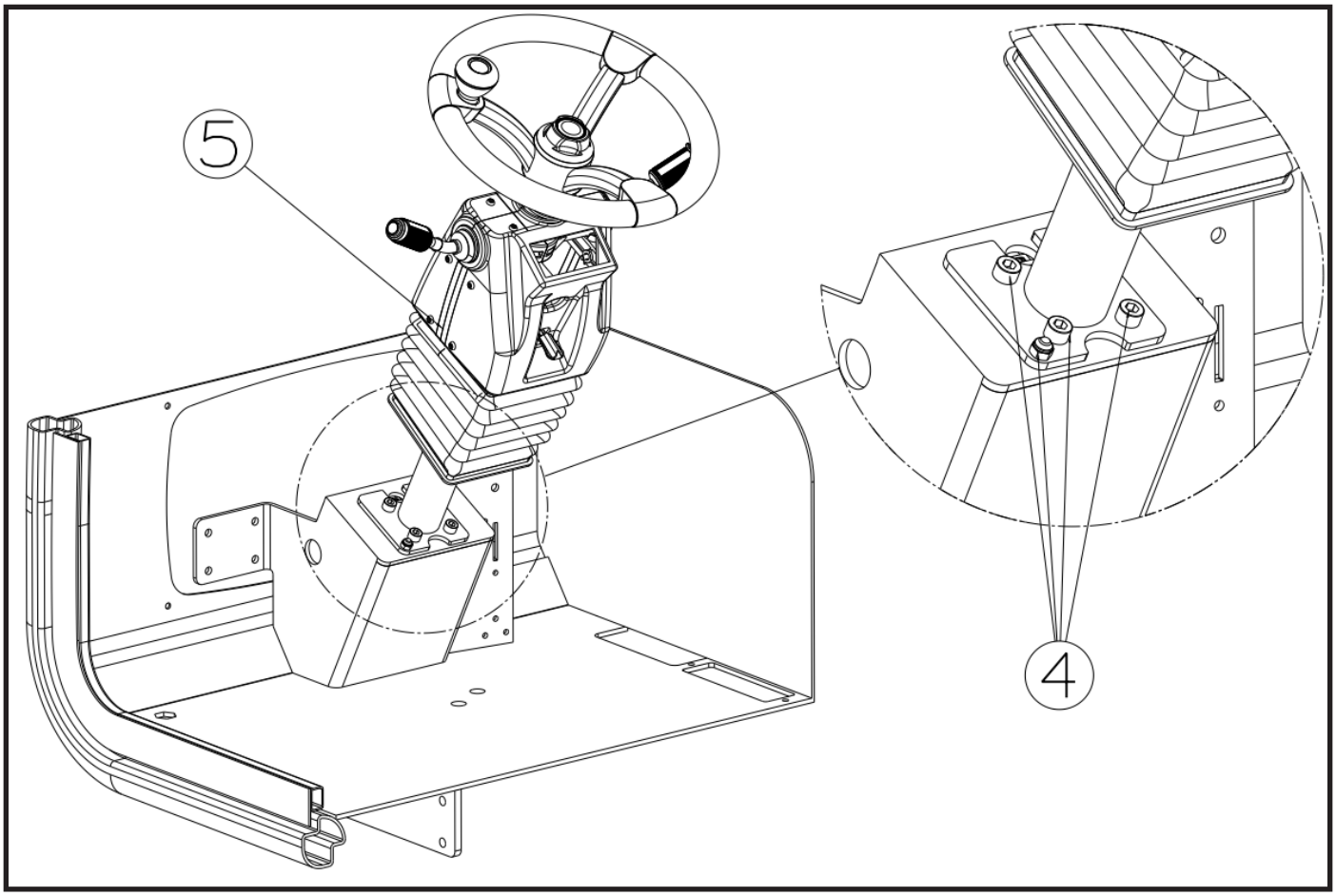

9. Remove the Steering Unit (**5**).

4WS Valve Replacement

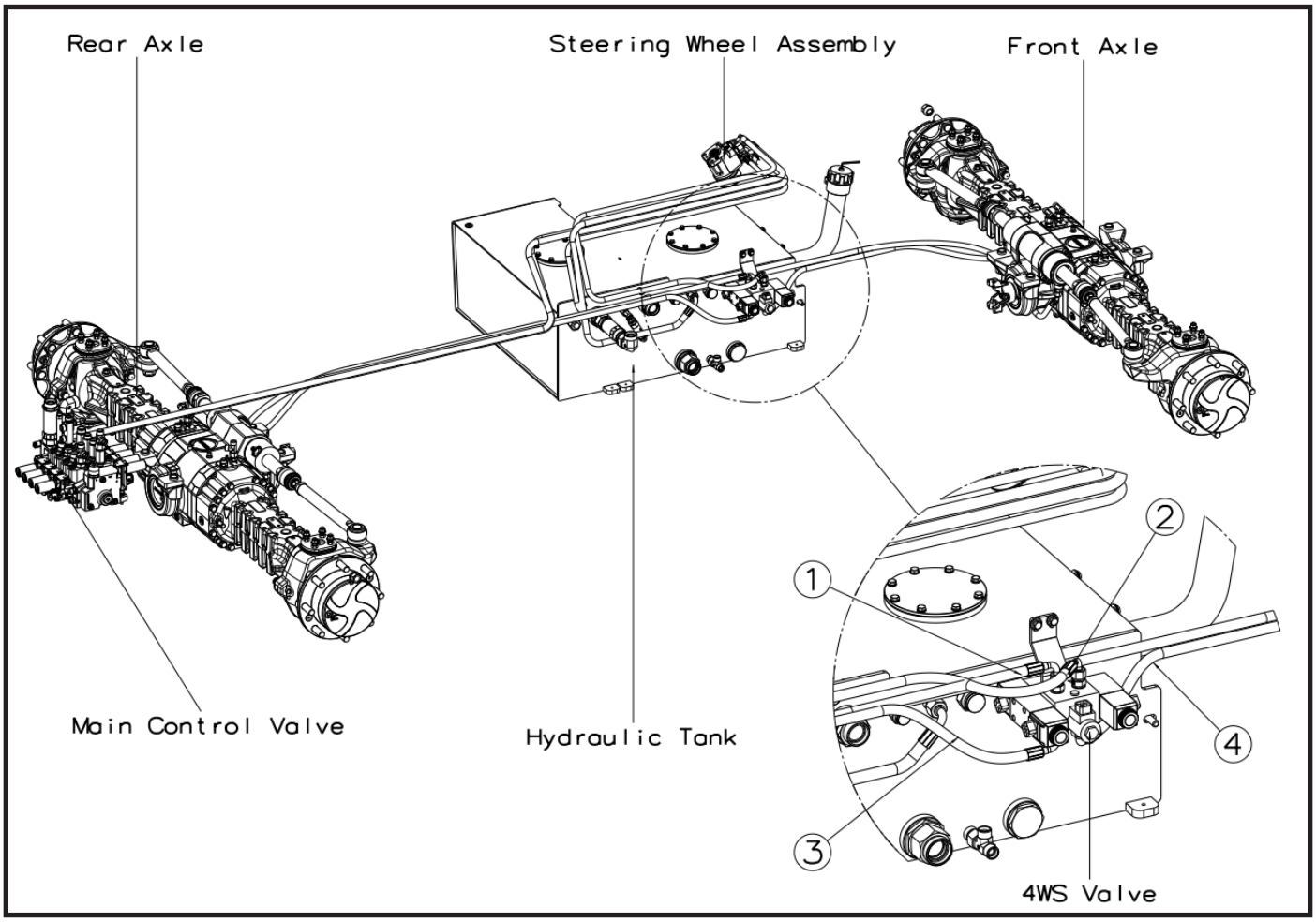

HYDRAULIC HOSES	
1	4WS Valve (Arka Sag) to Rear Axle
2	4WS Valve (DIR.L Port) to Steering Wheel Valve
3	4WS Valve (ARKA SOL Part) to Rear Axle
4	4WS Valve to Front Axle

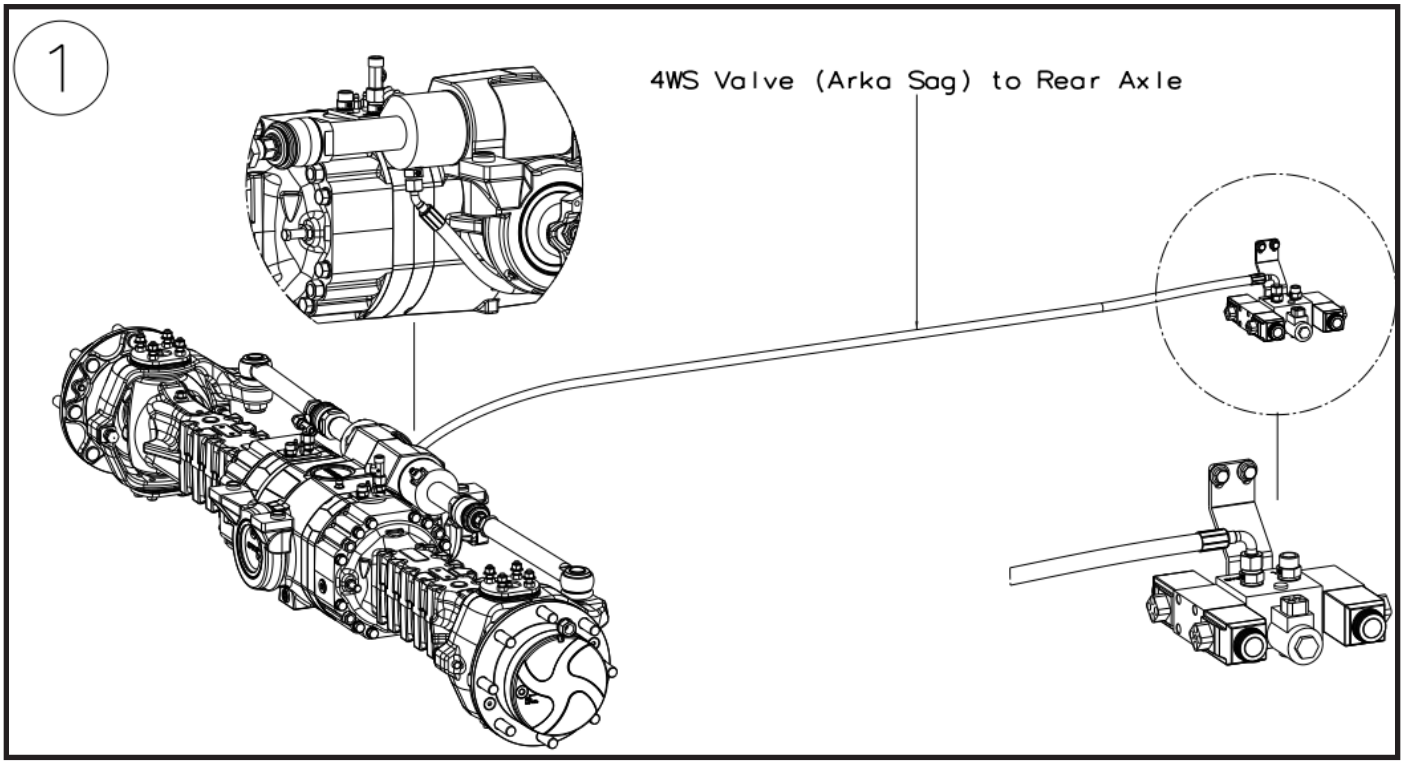
1
4WS Valve (Arka Sag) to Rear Axle

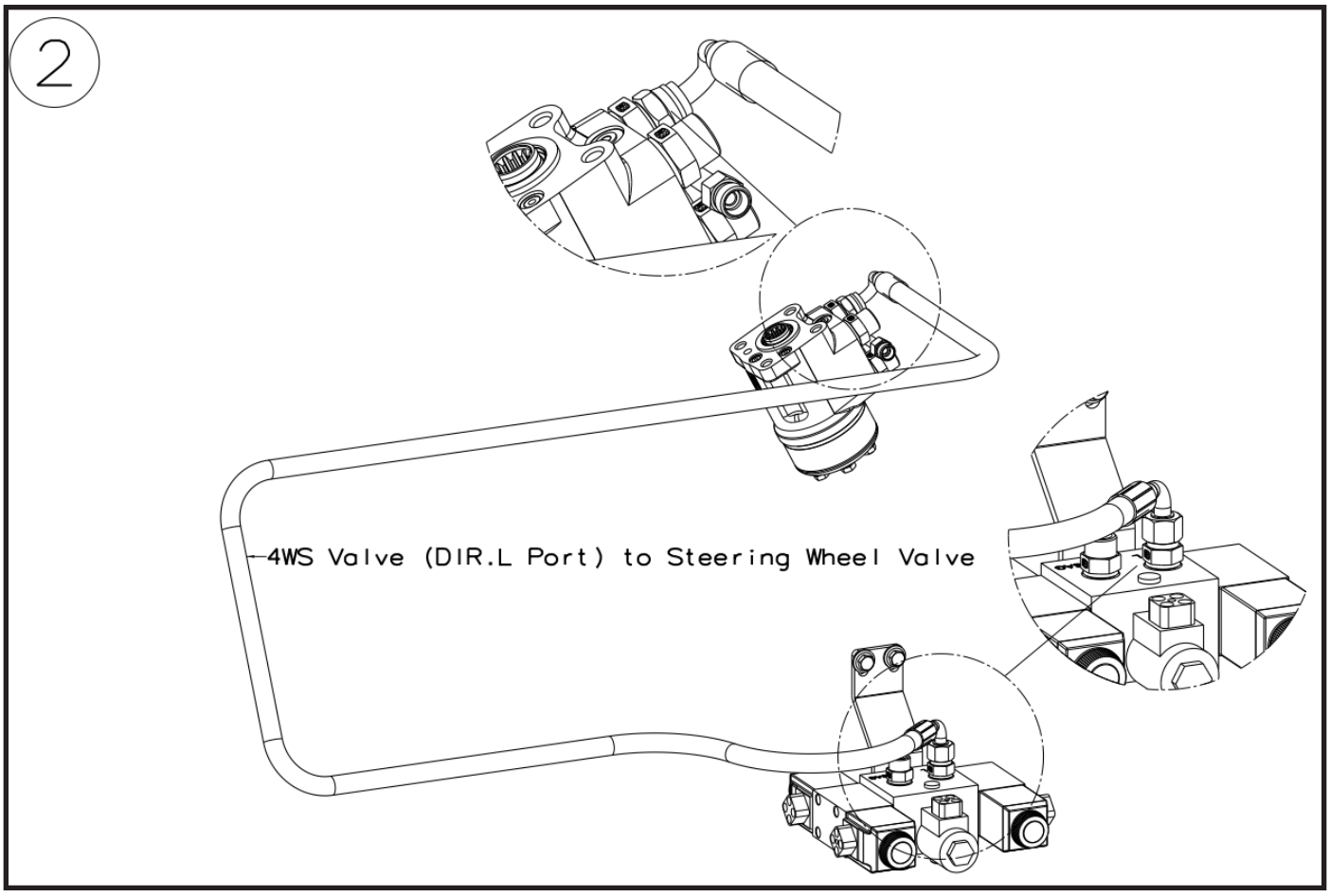
2
4WS Valve (DIR.L Port) to Steering Wheel Valve

3

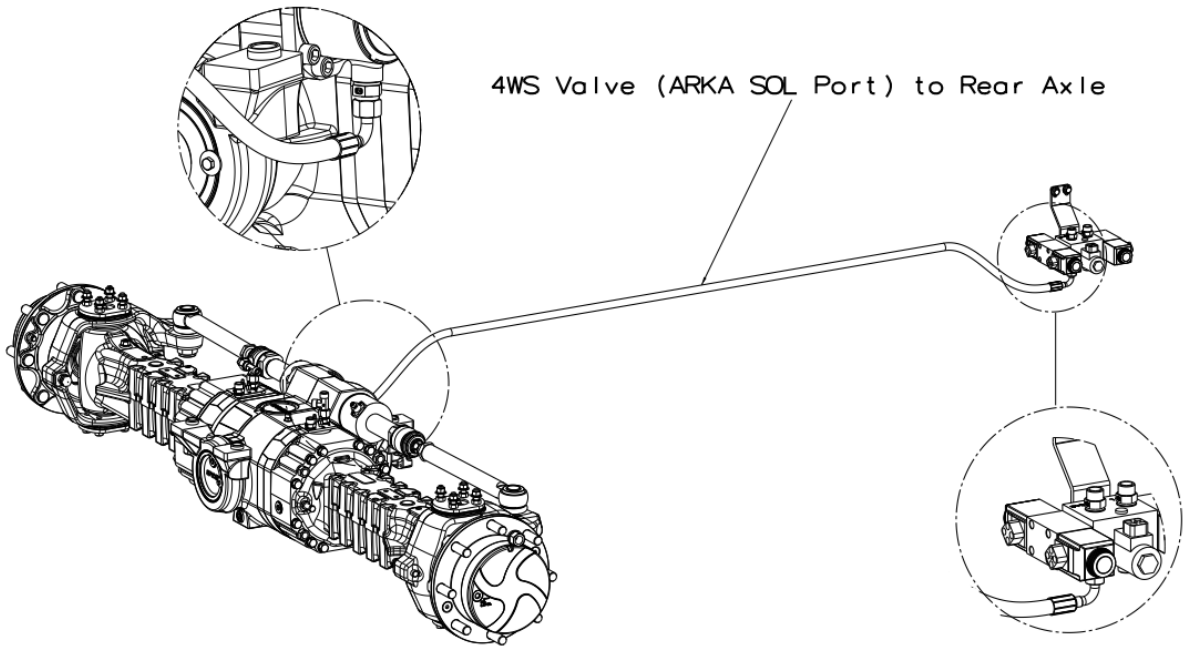
4WS Valve (ARKA SOL Port) to Rear Axle

4

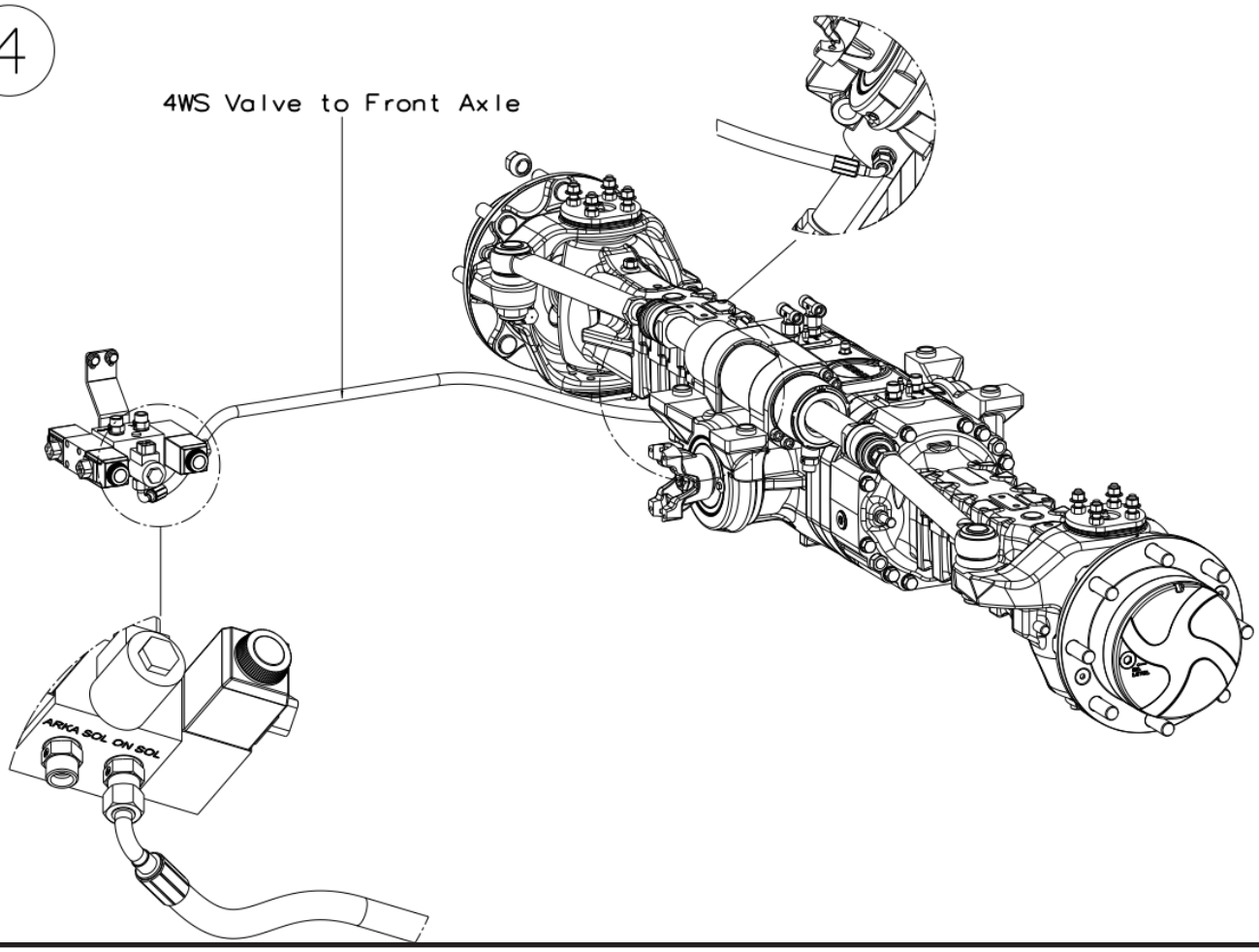
4WS Valve to Front Axle
ARKA SOL ON SOL

Removal

1. Park the machine on a firm, level surface, level the machine, fully retract the boom, lower the boom, place the transmission in (N) NEUTRAL, engage the park brake and shut the engine OFF.
2. Place a Do Not Operate Tag on both the ignition key switch and the steering wheel.
3. Open the engine cover. Allow the system fluids to cool.
4. Properly disconnect the battery. Refer to Section — Battery, for procedure.
5. Remove the Belly Pans (**1**).

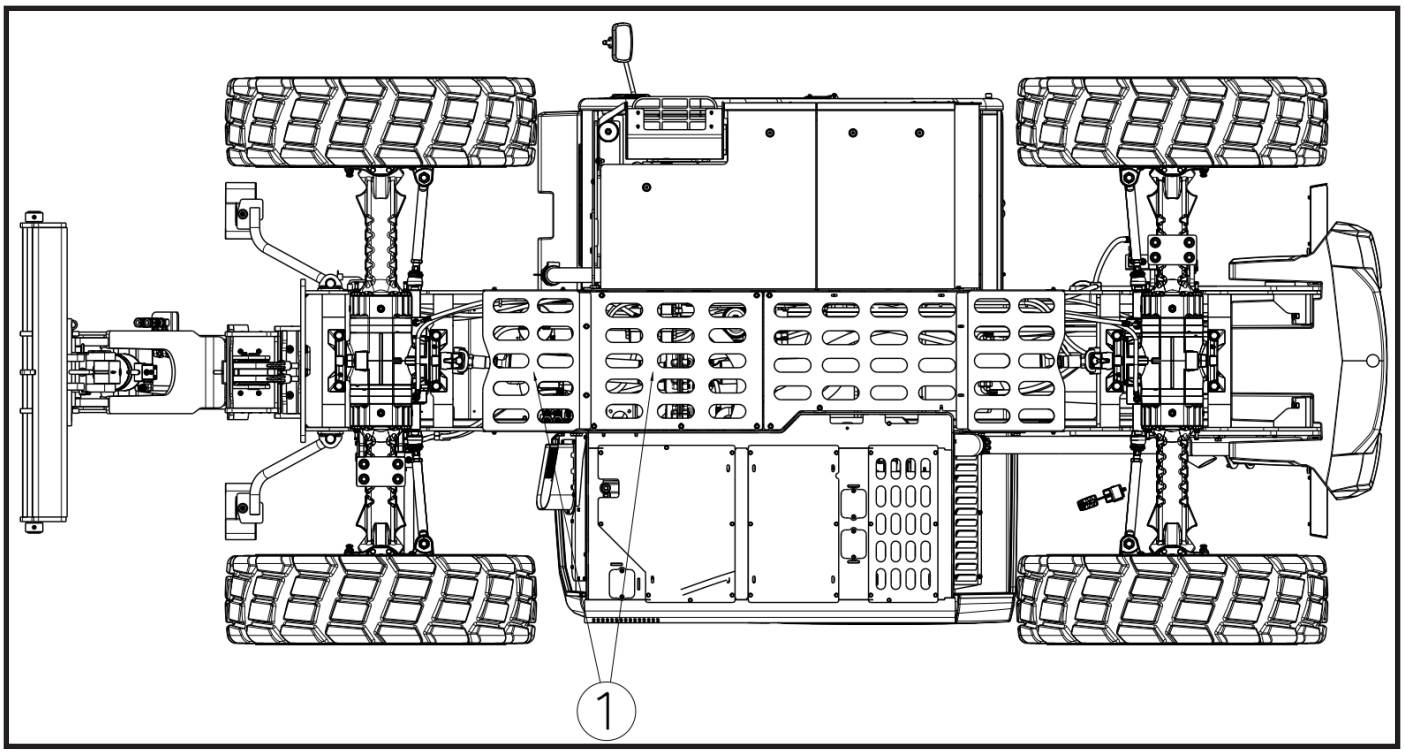

6. Remove the Service Gate (**2**).

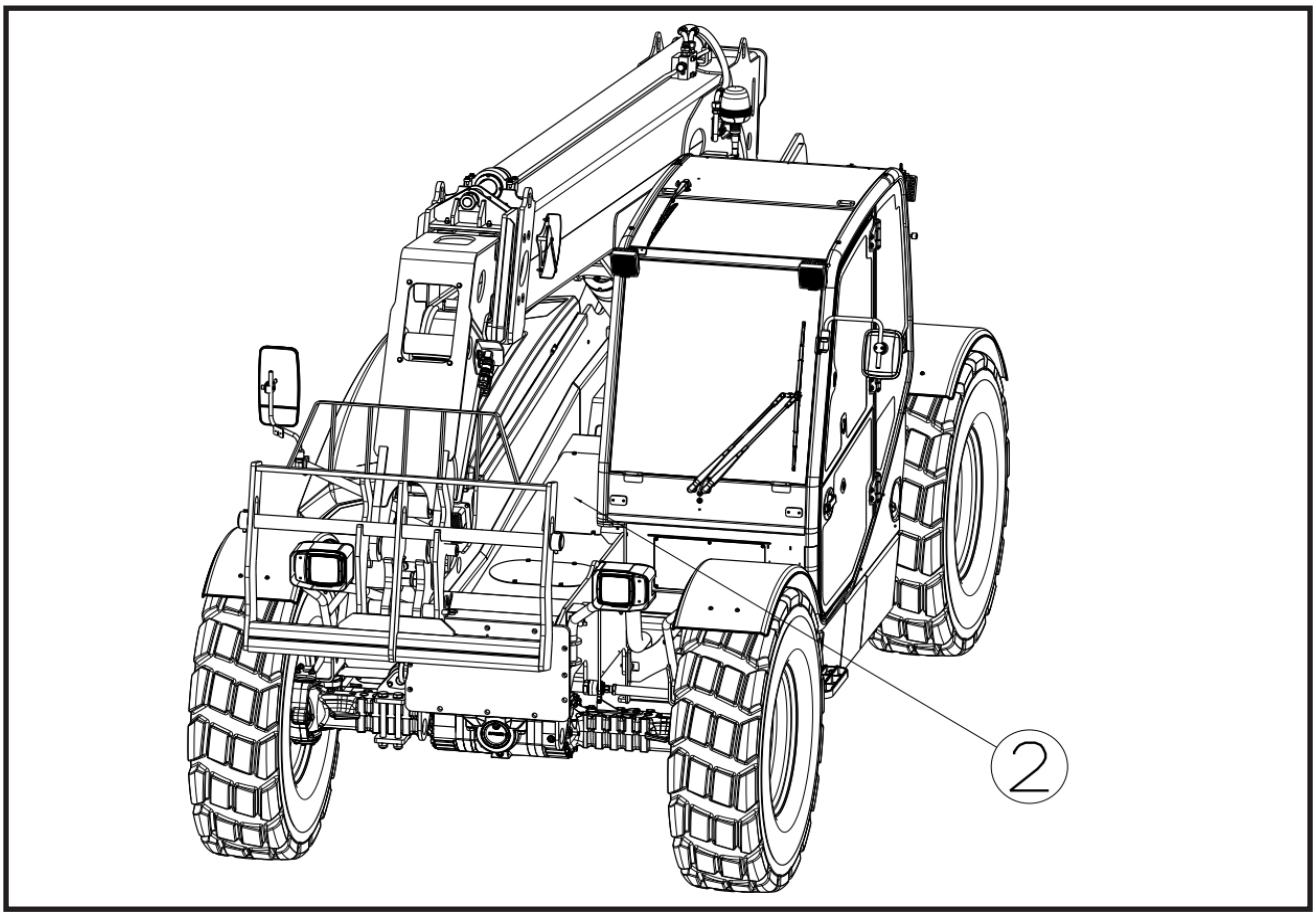

7. There are four Hydraulic Hoses (**3**) on the 4WS Valve. Remove the those hoses.

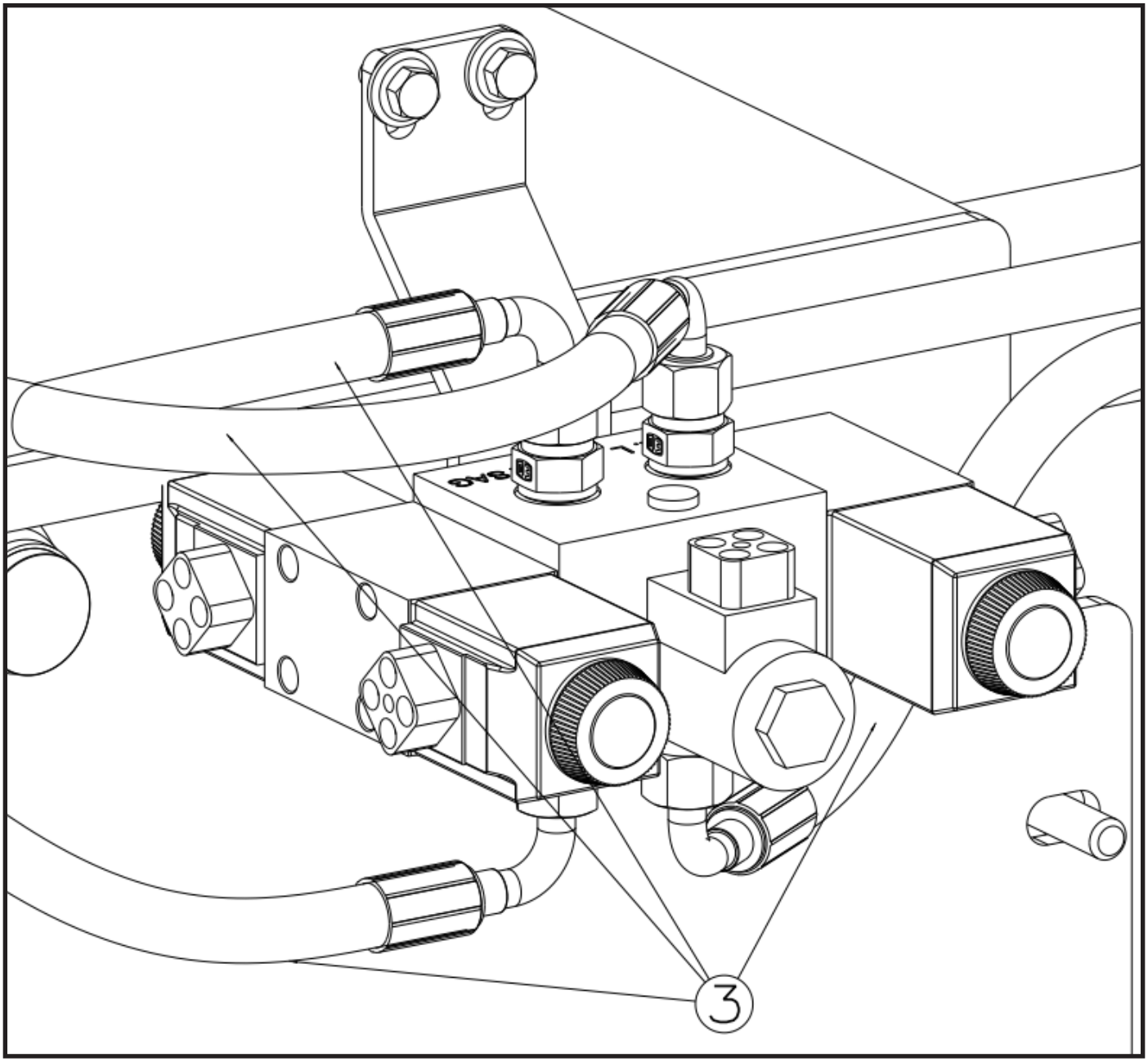

8. Unscrew the connection bolts (**4**) on the bracket and remove the 4WS Valve (**5**).

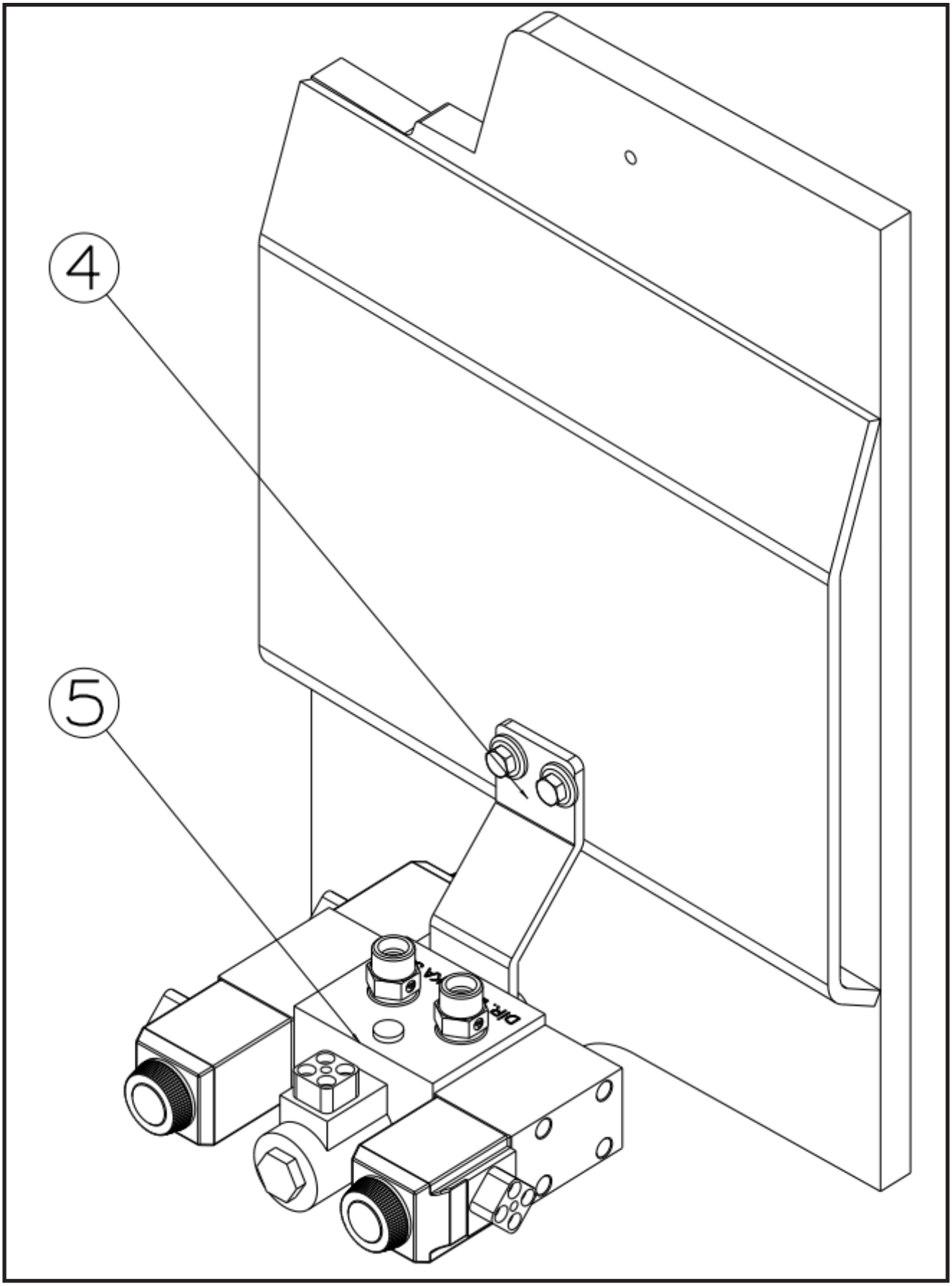

Installation

To install, reverse the removal procedure.

10.19.Hydraulic Cylinders

General Cylinder Instructions

Removal

1. Remove any attachment from the machine. Park the machine on a firm level surface and fully retract the boom. Allow sufficient work space around the hydraulic cylinder being removed. Support the boom if the lift/lower cylinder is being removed. Place the transmission in (N) NEUTRAL, engage the park brake, s hut the engine OFF and chock wheels.
2. Place a Do Not Operate Tag on both the ignition key switch and the steering wheel.
3. Open the engine cover. Allow the system fluids to cool.
4. Label, disconnect and cap or plug hydraulic hoses in relation to the cylinder.
5. Attach a suitable sling to an appropriate lifting device and to the cylinder. Make sure the device used can actually support the cylinder.
6. Remove the lock bolt and/or any retaining clips securing the cylinder pins. Remove the cylinder pins.
7. Remove the cylinder.
8. Wipe up any hydraulic fluid spillage in, on, near and around the machine, work area and tools.

Installation

1. Grease the bushings at the ends of the hydraulic cylinder. Using an appropriate sling, lift the cylinder into the mounting position.
2. Align cylinder bushing and install pin, lock bolt or retaining clip.
3. Connect the hydraulic hoses in relation to the labels or markings made during removal.
4. Before starting the machine, check fluid level of the hydraulic fluid reservoir and if necessary fill to full mark with oil.
5. Start the machine and run at low idle for about one minute. Slowly activate hydraulic cylinder function in both directions allowing cylinder to fill with hydraulic oil.
6. Inspect for leaks and check level of hydraulic fluid in reservoir. Add hydraulic fluid if needed. Shut the engine OFF.
7. Wipe up any hydraulic fluid spillage in, on, near and around the machine, work area and tools.
8. Close and secure the engine cover.

10.20.Boom

To understand the safety, operation and maintenance information presented in this section, it is necessary that the operator/mechanic be familiar with the name and location of the major assemblies of the boom system. The following illustration identifies the components that are referred to throughout this section.

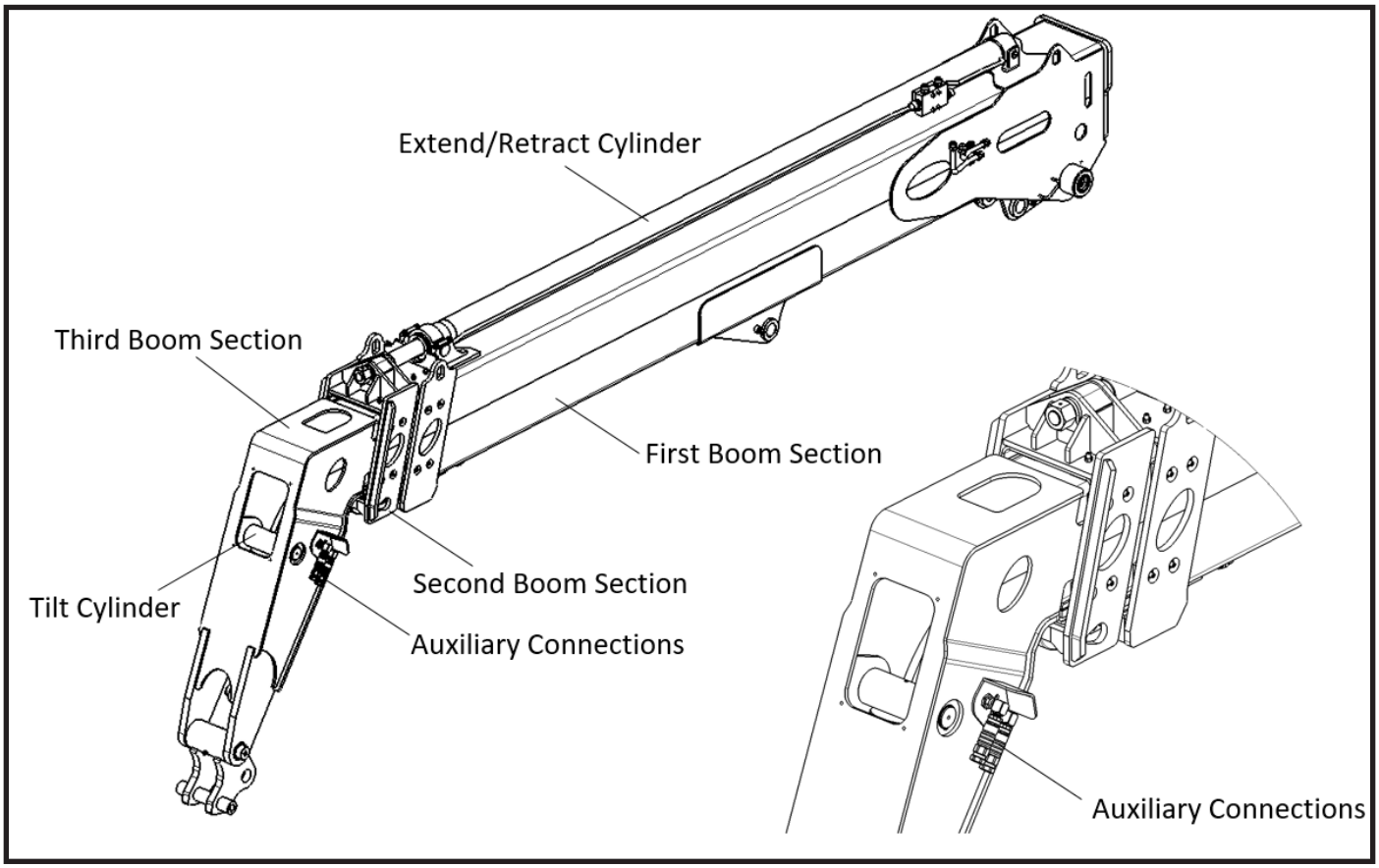

Boom Removal / Installation
Complete Boom Removal

While the boom sections can be separated fr om each other on the machine, it is more efficient to remove the complete boom assembly from the machine and place it on suitable supports for separation.

1. Park the machine on a hard, level surface, fully retract the boom, raise the boom assembly to access lift/lower cylinder pin and the compensation cylinder pin, place the transmission in (N) NEUTRAL, engage the park brake and shut the engine OFF.
2. Place a Do Not Operate Tag on both the ignition key switch and the steering wheel.
3. Open the engine cover. Allow the system fluids to cool.
4. Properly Drain Hydraulic oil system. *Refer to Section — Hydraulic Tank Replacement*, for detailed instructions.
5. Properly disconnect the battery. *Refer to Section — Battery*, for procedure.
6. Close engine cover to access lift/lower cylinder pin and the compensation cylinder pin.
7. Properly support the boom assembly using a hoist or crane.
8. Remove boom angle sensor arm. *Refer to Section — Boom Angle Sensor Replacement*.
9. Remove the pin (**1**) from the rod end of the lift/lower cylinder being careful not to drop the cylinder. Lower the cylinder to a secure position.

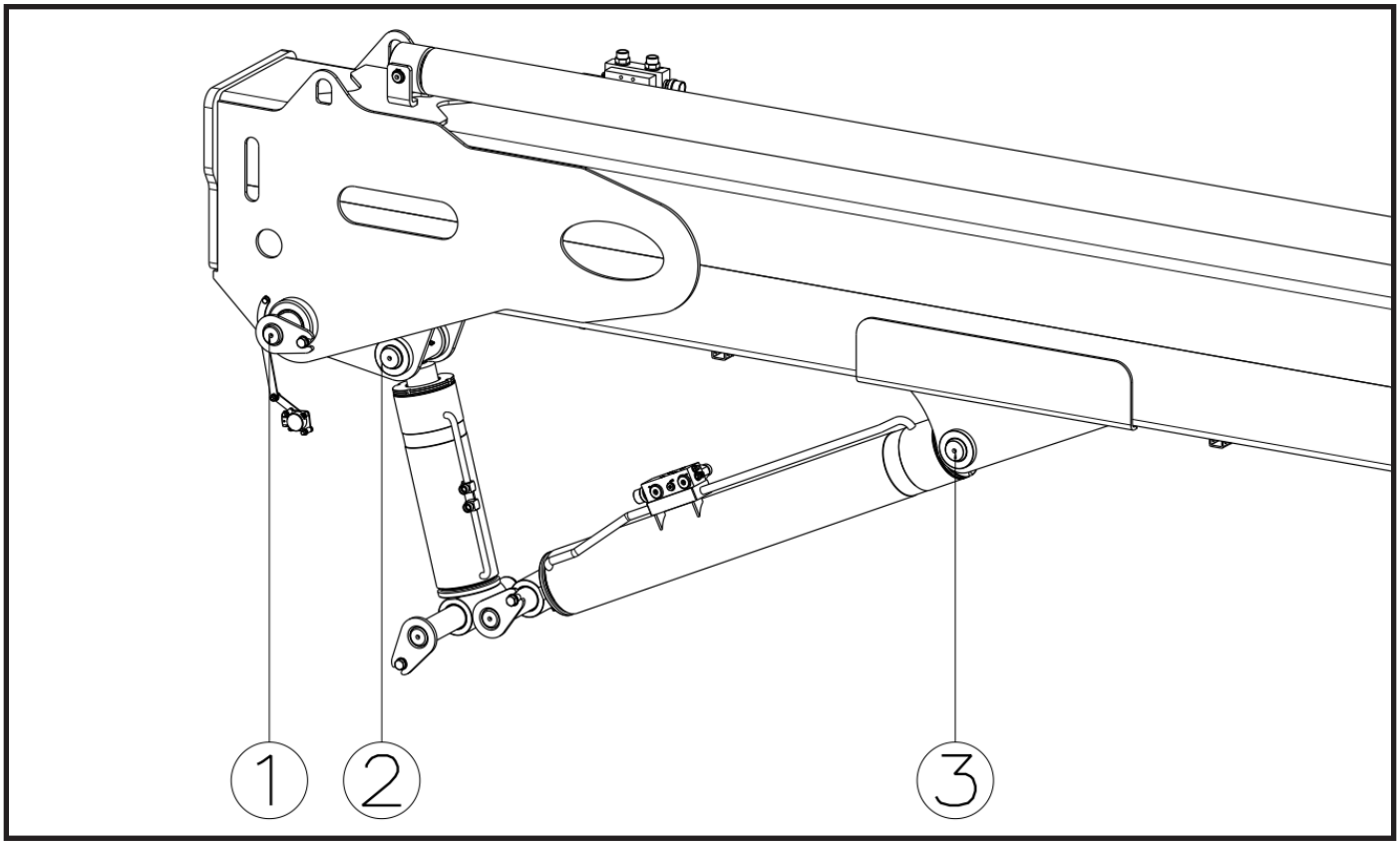

10. Remove the pin (**2**) from the rod end of the compensation cylinder being careful not to drop the cylinder. Lower the cylinder to a secure position.
11. Lower the boom assembly to level.
12. Remove the boom assembly pivot pin (**3**).
13. Remove the hoses (**4**).

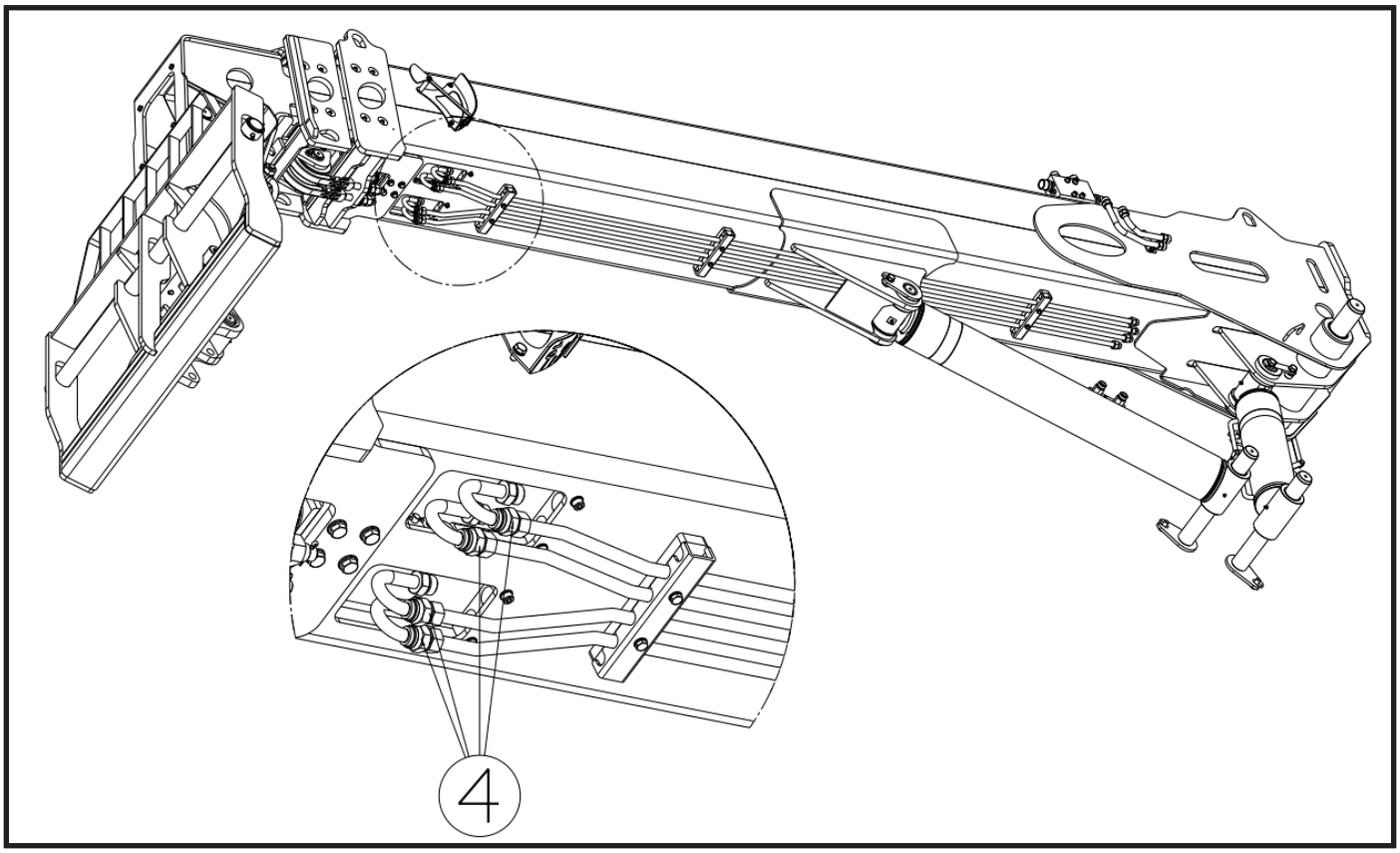

14. Confirm that the boom assembly is balanced with the sling and remove the boom assembly pivot pins.
15. Lift the boom assembly from the mac
16. Aim and lower onto suitable supports.

Complete Boom Installation

1. Park the machine on a hard, level surface, place the transmission in (N) NEUTRAL, engage the park brake and shut the engine OFF.
2. Place a Do Not Operate Tag on both the ignition key switch and the steering wheel.

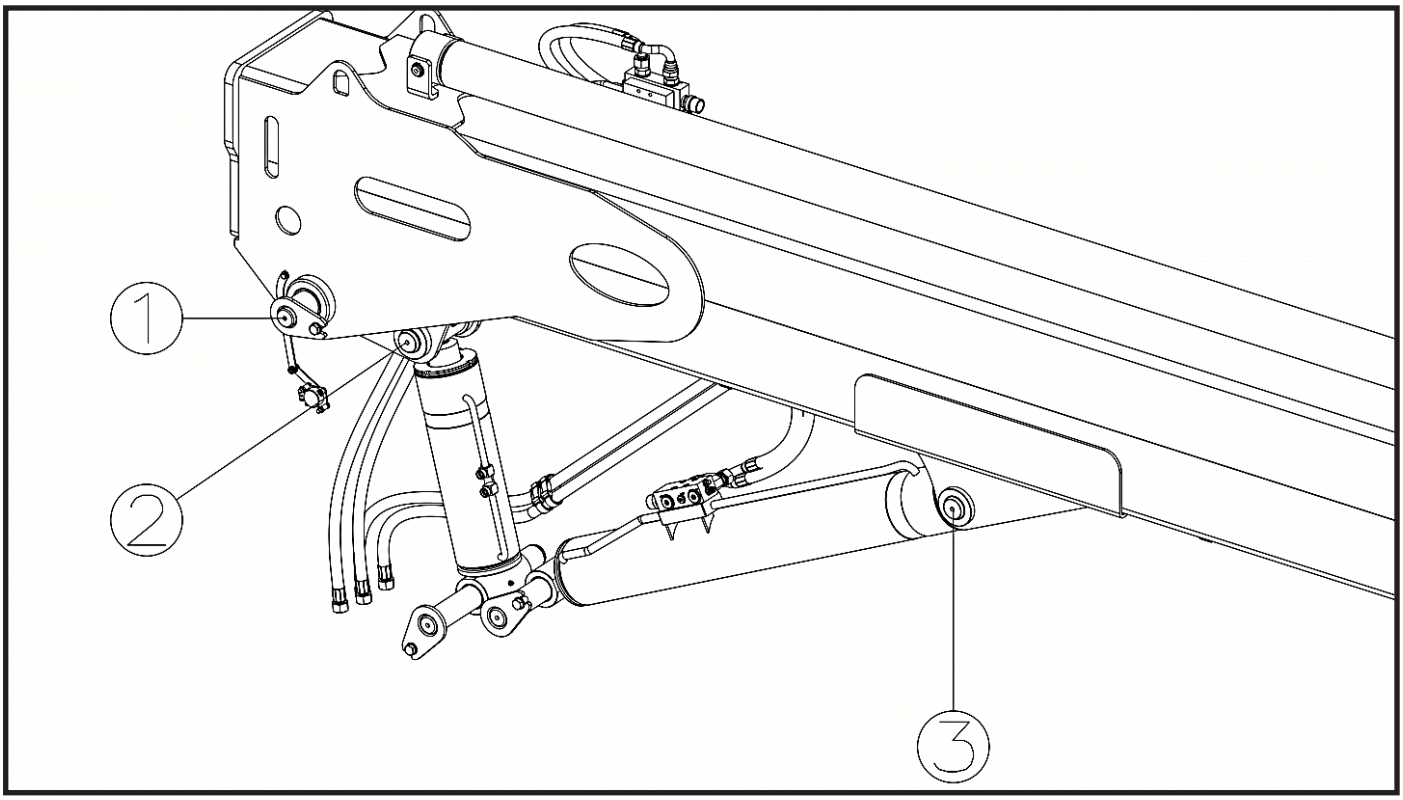

3. Using suitable slings, balance the boom assembly, lift and carefully guide the boom into place. Align the frame pivot bores with the boom assembly pivot bores. Install boom pivot pin and lock bolt (**1**).
4. With the sling still in place, install the compensating cylinder, pin and lock bolts (**2**).
5. With the sling still in place, install the rod end of the lift/lower cylinder, pin and lock bolt (**3**).
6. Connect the hoses (**4**).

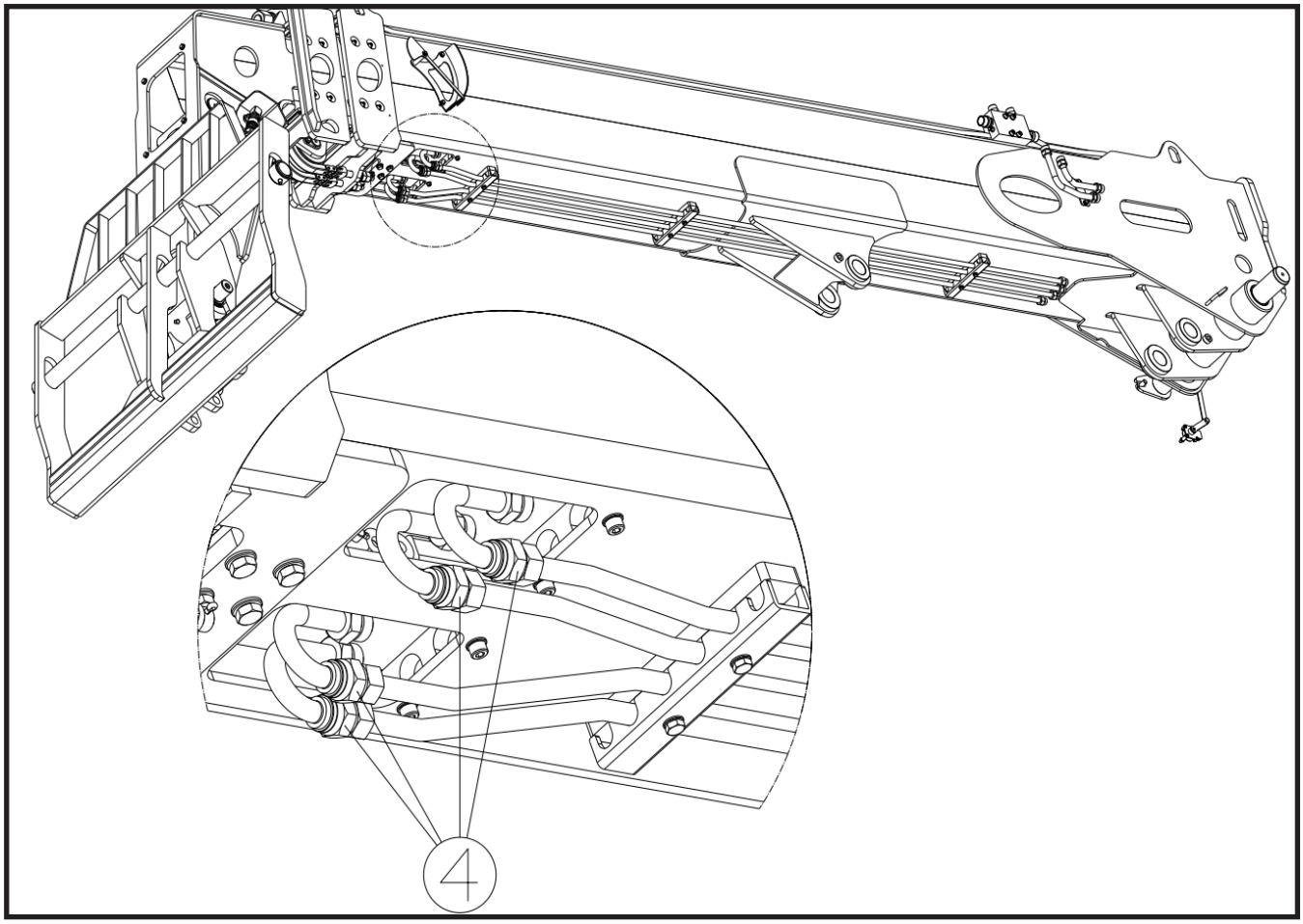

7. Connect all electrical connections to the boom assembly.
8. Install the boom angle sensor arm. *Refer to Section — Boom Angle Sensor Replacement*.
9. Start the engine and operate all boom functions several times to bleed any air out of the hydraulic system. Check for fluid leaks. Check the hydraulic fluid level in the tank and add fluid as required.
10. Lower the boom assembly and shut engine OFF.

Boom Angle Sensor Replacement

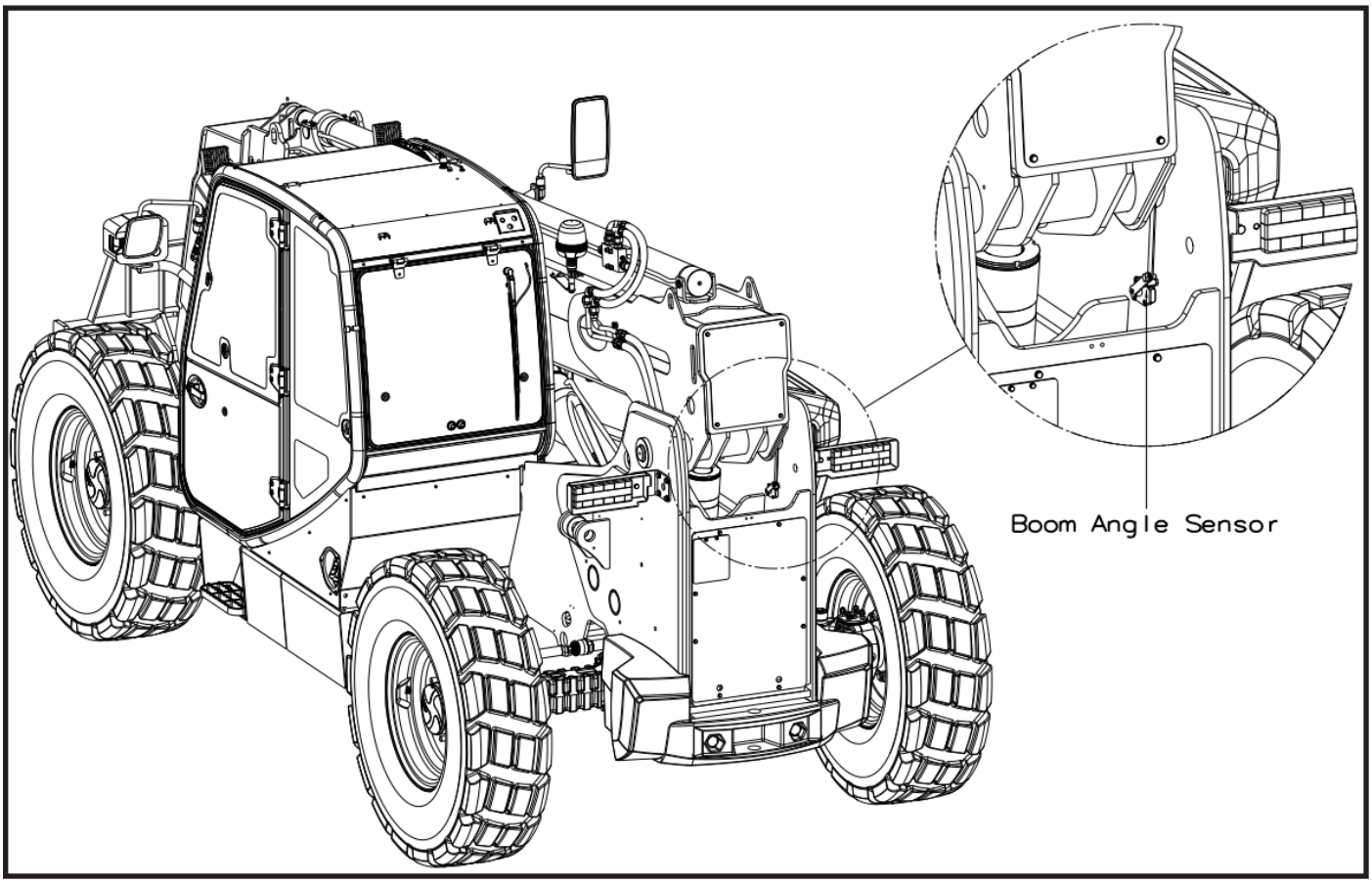

Removal

1. Park the machine on a firm, level surface, level the machine, fully retract the boom, lower the boom, place the transmission in (N) NEUTRAL, engage the park brake and shut the engine OFF.
2. Place a Do Not Operate Tag on both the ignition key switch and the steering wheel, stating that the machine should not be operated.
3. Open the engine cover. Allow the engine to cool.
4. Properly disconnect the battery. *Refer to Section — Battery*, for procedure.
5. Disconnect the boom angle sensor electrical connector.
6. Loosen and remove the nut holding the rod assembly (**1**) to the sensor arm.

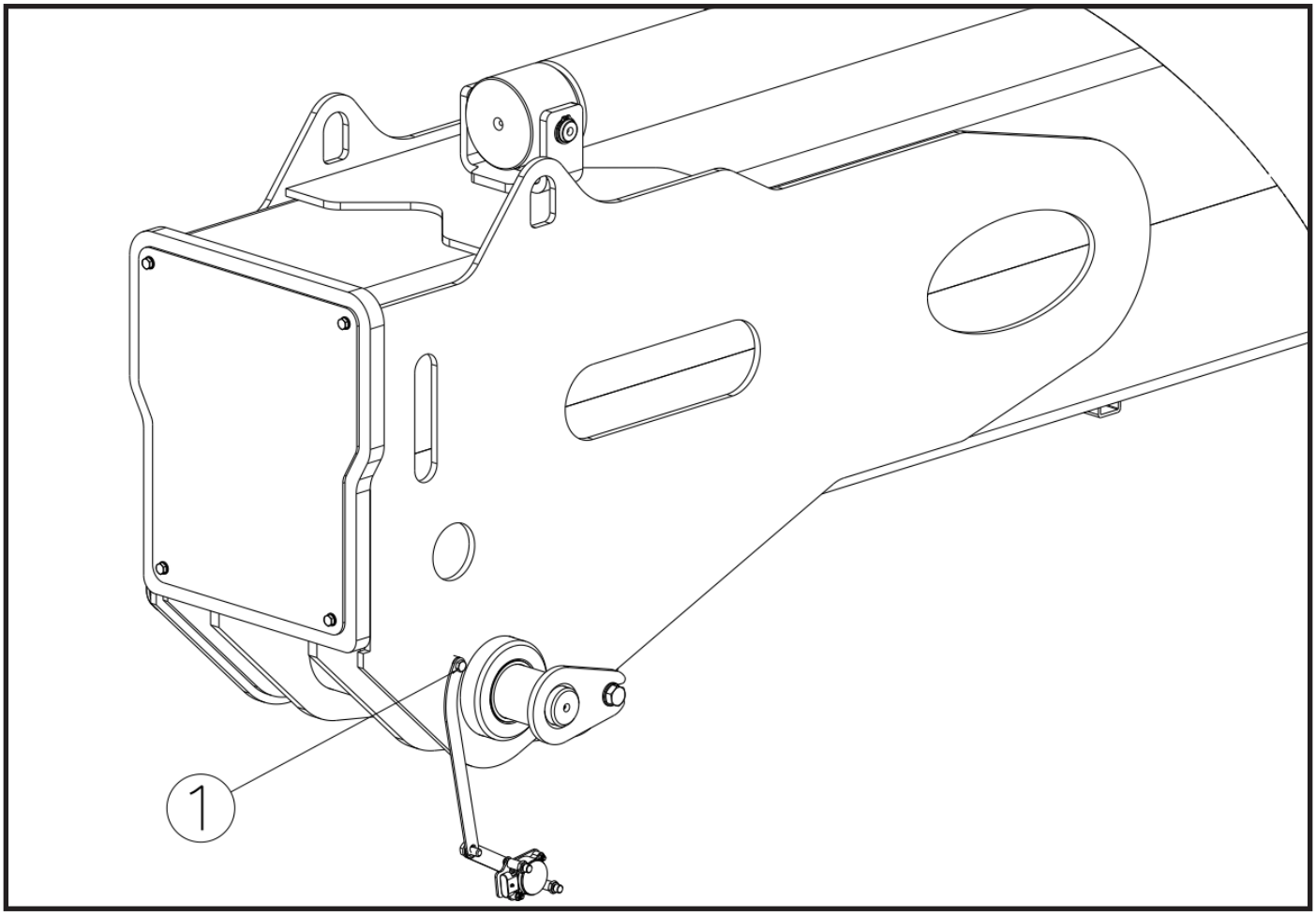

7. Remove the Boom Angle Sensor assembly.

Manual Coupler
Removal

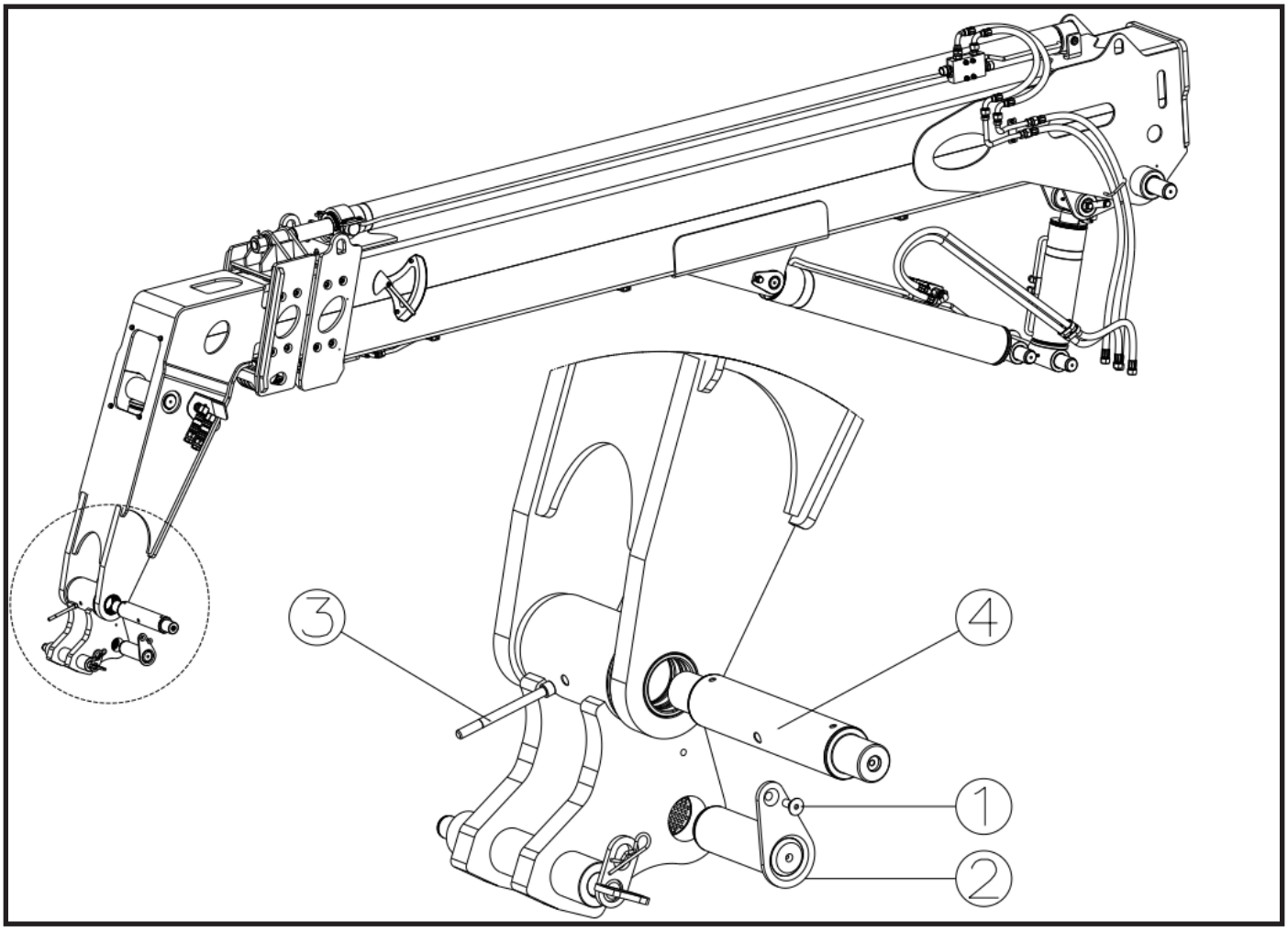

1. Tilt coupler forward to access coupler pin and lower to ground. Set park brake and turn off engine.
2. Remove the bolt and washer (**1**) securing the tilt cylinder rod end to the quick coupler assembly. Remove the rod end pin (**2**).
3. Support the quick coupler assembly. Remove the bolt and nut (**3**) securing the quick coupler assembly to the boom head. Remove the pin (**4**) from the quick coupler assembly.

Installation

1. Assemble the quick coupler to the boom head. Line up the quick coupler between the mounts on the boom head. The quick coupler should be centered in the boom head. NOTICE DO NOT coat the pin or any rotating parts.
2. Coat the static, non-rotating pin bores with anti-seize lube.
3. Coat all bushings, sheaves and rotating pin bores with grease.
4. Insert the quick coupler pivot pin (**4**) through the quick coupler and boom head. Secure with the previously removed bolt and nut (**3**).
5. Align the quick coupler with the tilt cylinder rod end and insert the coupler pin (**2**). Secure with the previously removed bolt and washer (**1**).

Forks

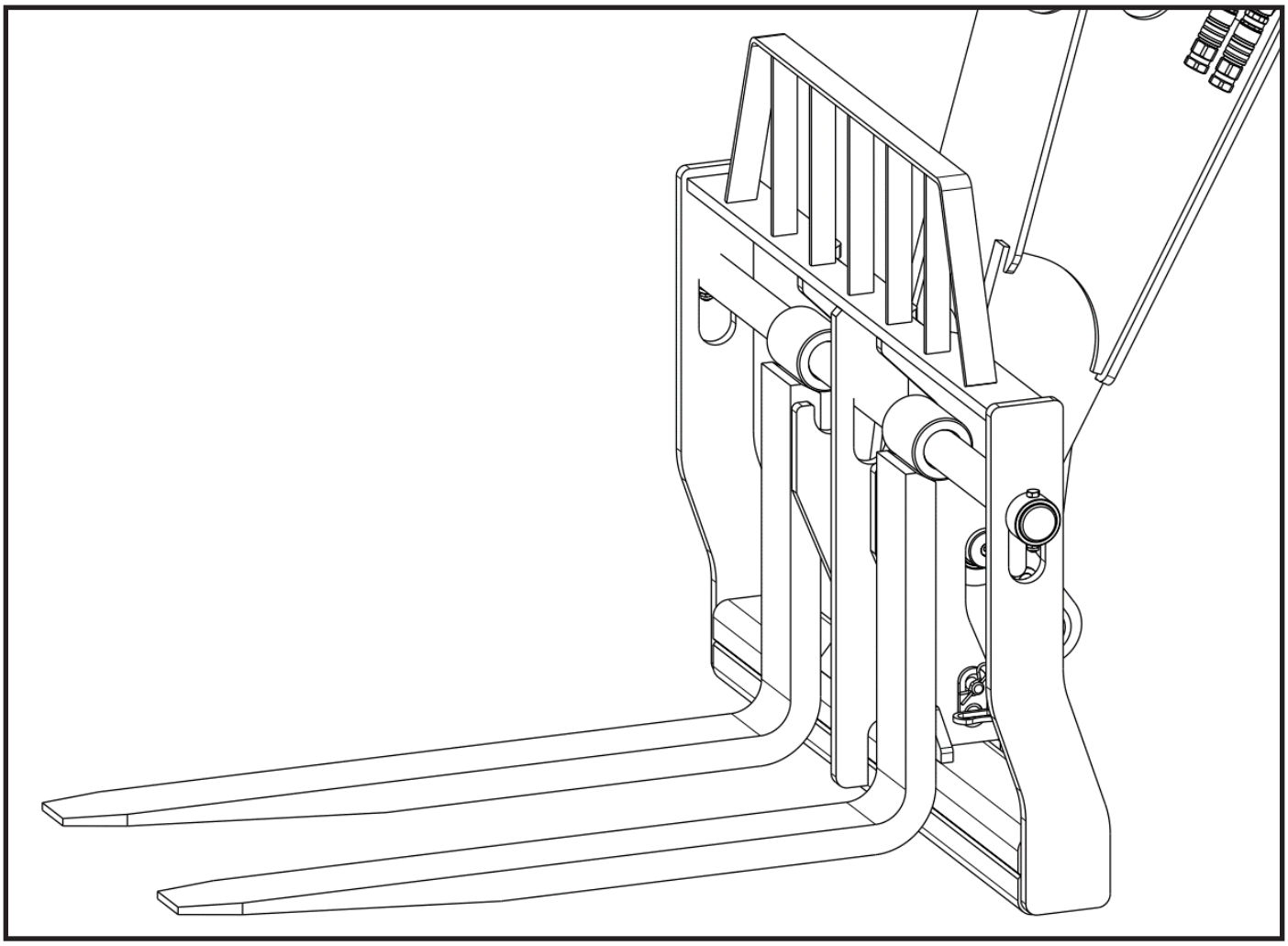

Removal

1. Bring the attachment down to the ground. Touch the ground slightly.
2. Remove the Manual Quick Attach (**1**).
3. Maket he cylinder move in tilt movement.
4. Lower the boom and remove the attachment from its location.
5. Release the attachment by pulling the machine back.

Installation

To install, reverse the removal procedure.

Boom Chain Replacement

Perform this procedure on a firm, level surface with the transmission in (N) NEUTRAL and the park brake engaged. Two persons are required.

WARNING — Use lifting equipment with a rated capacity of at least 1.5 times (150%) the weight of the component being lifted. Refer to the component weight table in this manual.

Removal

1. Start the engine, raise the boom to the horizontal position and position it so the chain anchor brackets and sheaves are accessible: [TBD] in ([TBD] mm) extension. Turn the engine off and place a Do Not Operate tag on the ignition key switch and the steering wheel.
2. Remove the boom front cover and any hose guides or covers as required to access the chain anchors. Protect the hydraulic hoses routed along the boom; verify they are not pinched when the boom sections are moved.
3. Release the chain tension: hold the anchor stud flat with a suitable wrench, loosen the locknut and back off the adjusting nut until the chain is slack.
4. Secure a rope to the anchor end of the chain being replaced. Verify the rope is securely attached; if the rope separates from the chain inside the boom, installation becomes extremely difficult.
5. Disconnect the chain: remove and discard the cotter pins, then withdraw the connection pins securing the chain to the chain connection and to the chain fixing bracket. Discard the connection pins; new pins must be fitted with a new chain. If the threaded chain connection must also be removed, remove the nuts, washer and disc springs from the stud, noting the order and orientation of the spring stack, and withdraw the connection from the bracket. If access requires it, remove the chain fixing bracket mounting bolts and washers and remove the bracket. Note the position and orientation of each part before removal.
6. If the chain cannot be lifted off the sheave: remove the sheave pin retaining bolt, withdraw the sheave pin and remove the sheave. Support the chain while the sheave is removed.
7. Pull the old chain out of the boom while feeding the rope through. Keep hands clear of the chain path; support the chain so it cannot fall freely.
8. Detach the rope from the old chain and attach it to the new chain.

WARNING — Bodily injury hazard. A slack or disconnected chain can fall out of the boom under its own weight. Keep hands clear of the chain path and support the chain at all times.

Note: Chain handling rules. Use factory-assembled chain lengths only; do not build a chain from individual components and do not join chain lengths or mix chains from different manufacturers. Replace chains as a complete set, even when only one component is faulty. Never heat or heat-treat a chain that has been in service; a chain that has been heated to remove it must not be refitted. Never weld on a chain or its components, and keep welding spatter away from the chains.

Preparing the New Chains (Bench Assembly)

Note: Replacement chain sets are supplied as components: chains, chain fixings, chain connections, pins and cotter pins. Assemble the anchor ends onto the new chains on a clean bench before installing the chains in the boom.

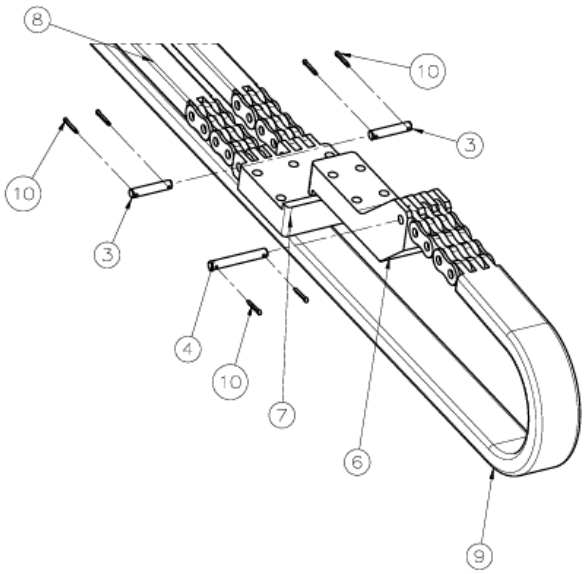

Chain set: connection pins and cotter pins at the chain ends.

1. Lay the new chains flat on a clean surface. Verify the chain type and lacing match the chains being replaced (chain types differ by position; e.g. paired chains and single chains use different lacings).
2. Position the chain fixing on the fixing end of the chain (paired chains share a common fixing).
3. Insert the pins through the fixing and the chain end(s).
4. Secure both sides of each pin with NEW cotter pins.
5. Position a chain connection on the other end of each chain and insert the pins.
6. Secure both sides of each pin with NEW cotter pins.
7. Verify every cotter pin is fully closed with the legs completely spread before installing the chains in the boom.

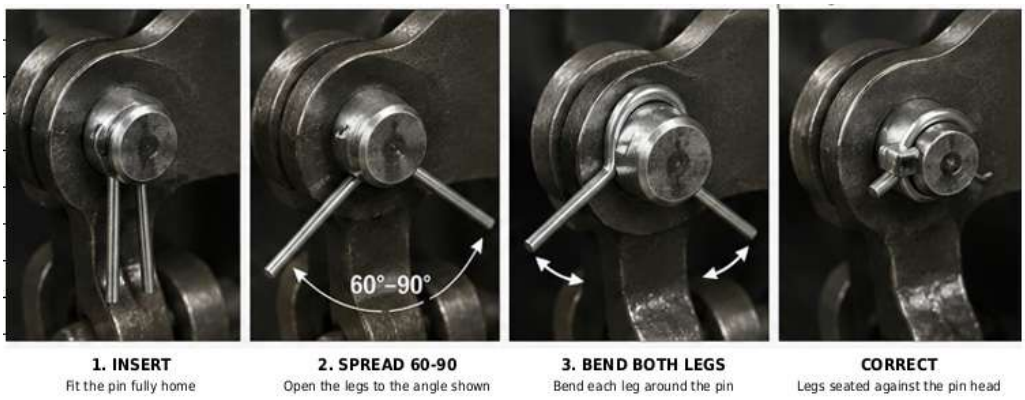

Correct cotter pin installation.

Installation

1. Seat the chain over the sheave. If the sheave was removed: install the retaining rings on the bearings and press the bearings into the sheave. Never drive bearings in with a hammer; use a press. Position the sheave on the boom and drive in the sheave pin. Apply Loctite 243 to the retaining bolt, install the bolt with its washer and torque to the value in the table below.
2. If the chain carrier blocks were removed, reinstall them with their washers. Apply Loctite 243 to the mounting bolts and torque to the values in the table below, using the cross tightening sequence on the upper block.

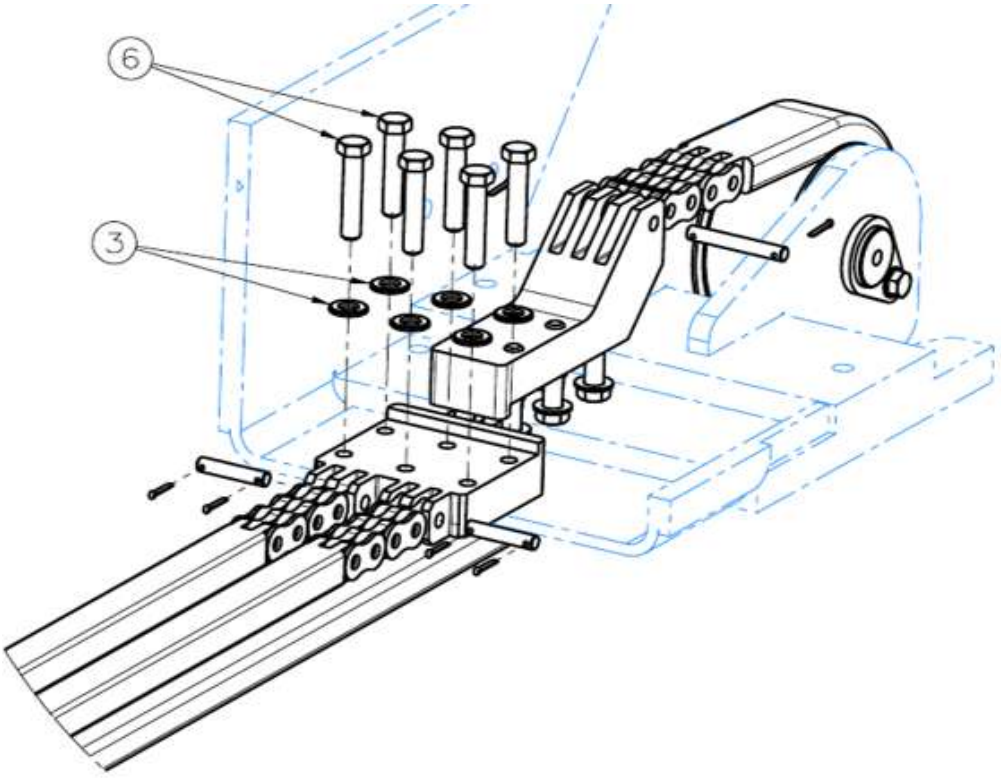

Chain carrier upper block and lower plate.

3. If the chain fixing bracket was removed, reinstall it with its washers. Apply Loctite 270 to the mounting bolts and torque to the value in the table below.
4. Repeat for each chain being replaced. Lay each chain set into its channel in the boom and verify there is no twist in the chain before connecting the ends. Always replace chains in sets. The chains within a set are not identical (TH-842/944/1044: three chains of two types; TH-1056/1256: six chains of four types): verify each chain is installed in its correct position and orientation.
5. Repeat for each chain being replaced. Always replace chains in sets as specified by the chain manufacturer. The chains within a set are not identical (TH-842/944/1044: three chains of two types; TH-1056/1256: six chains of four types): verify each chain is installed in its correct position and orientation.
6. Reinstall the boom front cover and any hose guides or covers that were removed.
7. Adjust the chain tension. Refer to Boom Chain Tension Adjustment.
8. Start the engine and cycle the boom through several full extend/retract cycles. Verify the Fix, First and Second boom sections sequence correctly and the chains run true on the sheaves.
9. Re-check the chain tension after the first [TBD] operating hours; new chains seat during initial operation.

Note: When a chain is replaced due to wear, inspect the mating sheaves and replace them if worn.

Chain and Sheave Fastener Torques

Joint	Fastener	Retainer	Torque	
Chain carrier upper block to boom	M12 x 55, class 10.9, with washer (6)	Loctite 243	85 ft-lb (115 Nm), cross tightening sequence	
Chain carrier lower plate	M12 x 50, class 8.8, with washer (4)	Loctite 243	63 ft-lb (85 Nm)	
Sheave pin retaining bolt	M10 x 20, class 8.8, with washer	Loctite 243	36 ft-lb (49 Nm)	
Chain adjusting stud counternut	M22 nut, DIN 934 class 8 (second nut)	Torque seal after tightening	170 ft-lb (230 Nm), 32 mm wrench	

Wear Pad Replacement and Shim Adjustment

WARNING — Use lifting equipment with a rated capacity of at least 1.5 times (150%) the weight of the component being lifted. Refer to the component weight table in this manual.

WARNING — Crushing hazard. Support the boom section before removing the wear pads. With the pads removed, the inner boom section can shift within the outer section.

Removal

1. Park the machine on a firm, level surface. Place the transmission in (N) NEUTRAL, engage the park brake switch, retract and level the boom. Turn the engine off and place a Do Not Operate tag on the ignition key switch and the steering wheel.
2. Remove the boom covers as required to access the pads.
3. Using a lifting device of sufficient capacity, support the boom section so the weight is off the pads being removed.
4. Remove the side pads first. Remove the nuts and studs, working from the inside of the boom section, and remove the pads and shims. Record the shim thickness and position for each pad.
5. Remove the top and bottom pads. Remove the nuts, remove the pin stoppers from the studs where fitted, then remove the studs, pads and shims. Record the shim thickness and position for each pad.
6. Inspect the pad support plates and clean the mounting faces.

Note: The side pads restrict access to the top and bottom pads and must be removed first. Installation is in the reverse order: top and bottom pads first, then the side pads.

Installation

1. Install the top and bottom pads first. Fit the studs to the pad support plates, apply Loctite 270 to the studs, and position each pad with its recorded shims. Where fitted, install the pin stoppers on the studs.
2. Install the nuts and torque to 64 ft-lb (86.9 Nm).
3. Install the side pads. Fit the studs and nuts from the inside of the boom section, apply Loctite 270 to the studs, and place the shims between the pad and the support plate.
4. Torque the side pad nuts to 64 ft-lb (86.9 Nm).
5. Measure the total gap between the pads and the next boom section: 0.019 to 0.059 in (0.5 to 1.5 mm). Add or remove shims as required and re-torque the nuts.
6. Lubricate the pad contact surfaces and the interior running surfaces of the boom sections with the specified grease [TBD]. Do not leave any unlubricated area on the running surfaces.
7. Reinstall the boom covers.
8. Start the engine and cycle the boom through several full extend and retract cycles. Verify the sections move without binding, then re-check the clearance and the nut torque.
9. Remove the Do Not Operate tags.

Note: Pads must be replaced as a set. A single new pad running against worn pads will carry an uneven load and wear rapidly.

10.21.Rearview Camera (If Equipped)

The reversing camera provides an additional view of the area directly behind the telehandler. The view displays on the multifunction display home screen when the telehandler is running, transmission is in reverse and when backup camera is configured to be present under machine Setup. The display automatically returns to the standard home screen when transmission is shifted out of reverse.

To activate the rear camera, refer to the information in section 3.9 Hidden Screen.

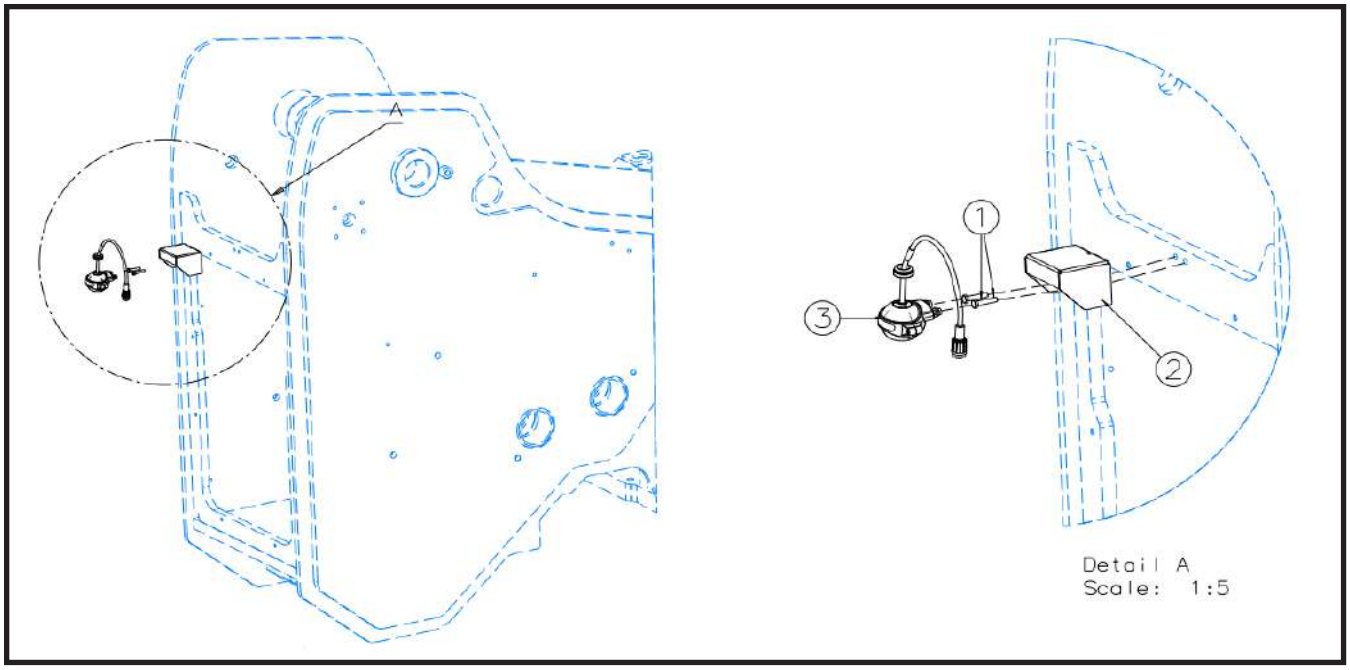

Removal

1. Park the machine on a firm, level surface, level the machine, fully retract the boom, lower the boom, place the transmission in (N) NEUTRAL, engage the park brake and shut the eng ine OFF.
2. Properly disconnect the battery. *Refer to Section — Battery*, for procedure.
3. Remove the connecting bolts (**1**) on cover plate (**2**).
4. Remove the Rearview Camera (**3**).

Component Terminology

To understand the safety, operating and maintenance information presented in this section, the operator/ technician must know the names and locations of engine components. The following illustration identifies the components referenced throughout this section.

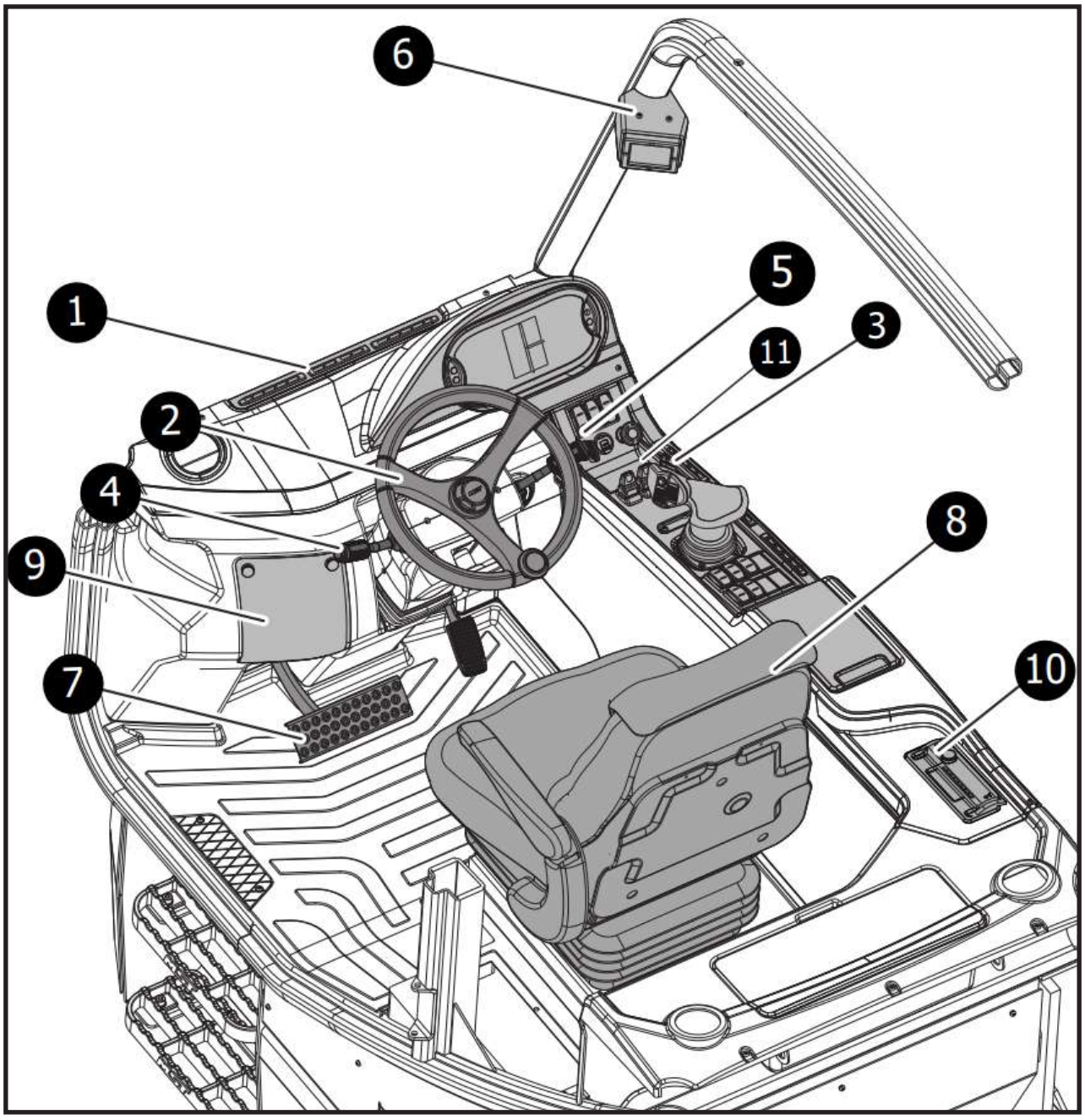

1. Air Ducts	2. Steering Wheel Control Group	3. Right Control Group	4. Gear Selector
5. Wiper & Selector Lever	6. LLMI	7. Pedals	8. Operator Seat
9. Fuse Panel	10. Multimedia	11. Stabilizier Switchs (Only 1044)	

Steering Wheel Control Group

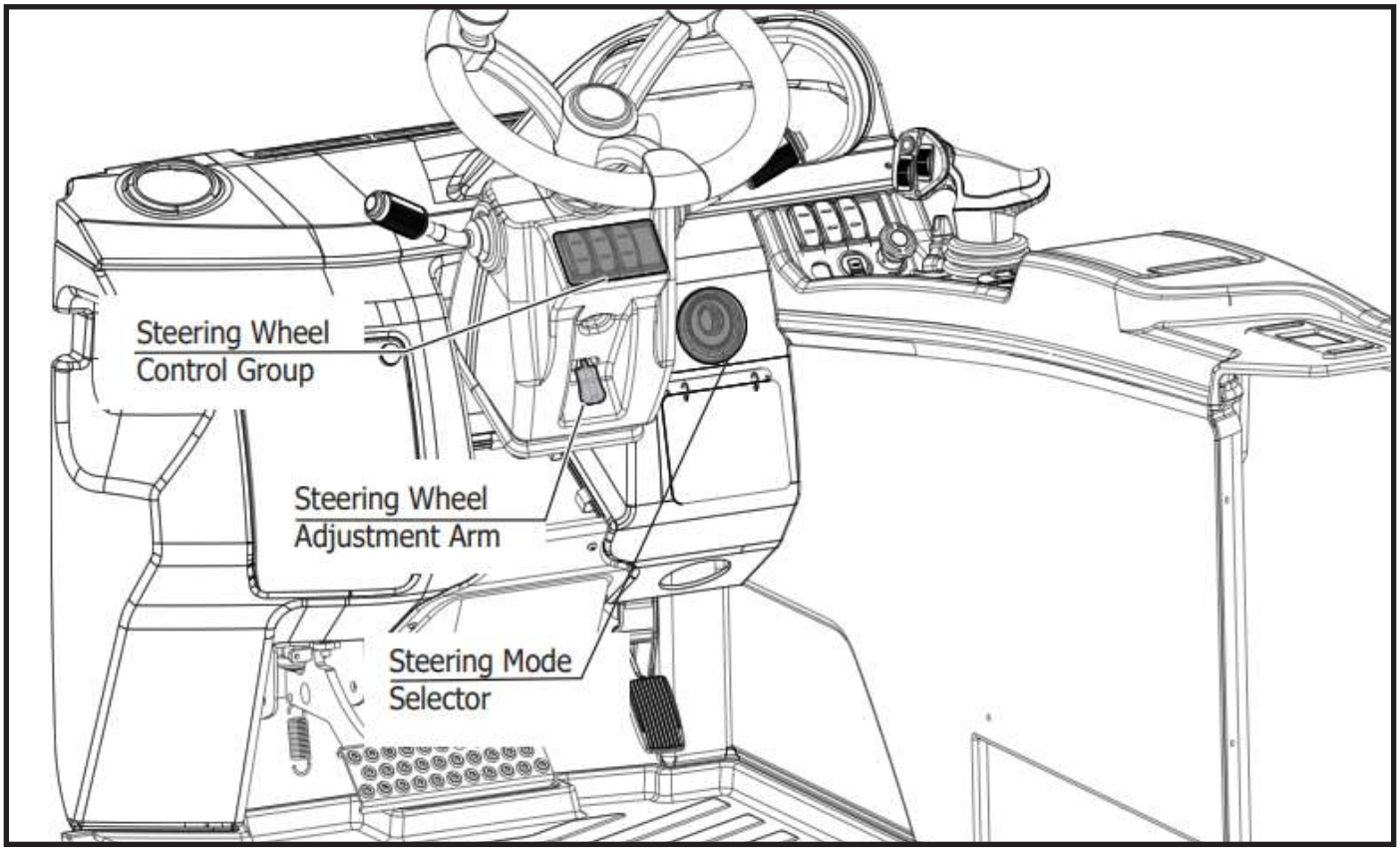

Steering Wheel Adjustment Arm

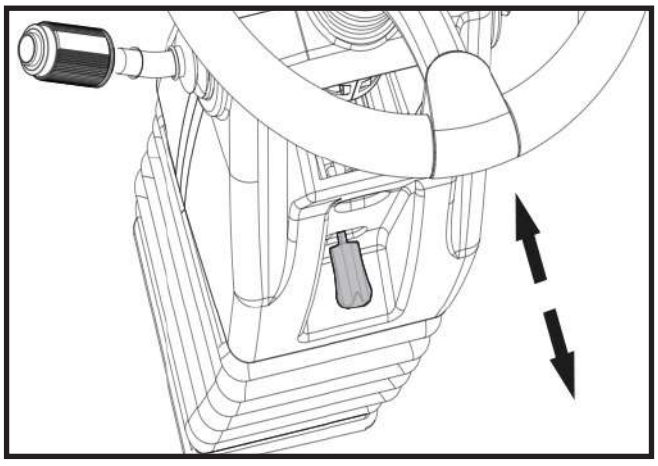

Loosen the steering wheel adjusment arm to adjust the steering column position.

After the adjustment, fasten the steering wheel adjust ment arm.

WARNING-Rollover Risk

Always stop the engine before adjusting the position of the steering wheel. Sudden change of driving direction could result change the center of gravity of the load.

Serial Number Nameplate

The serial number nameplate, located at the front left side of the telescopic forklift lists the following;

- Model Number
- Serial Number
- Engine Power
- Weight of the Vehicle
- Production Date

-

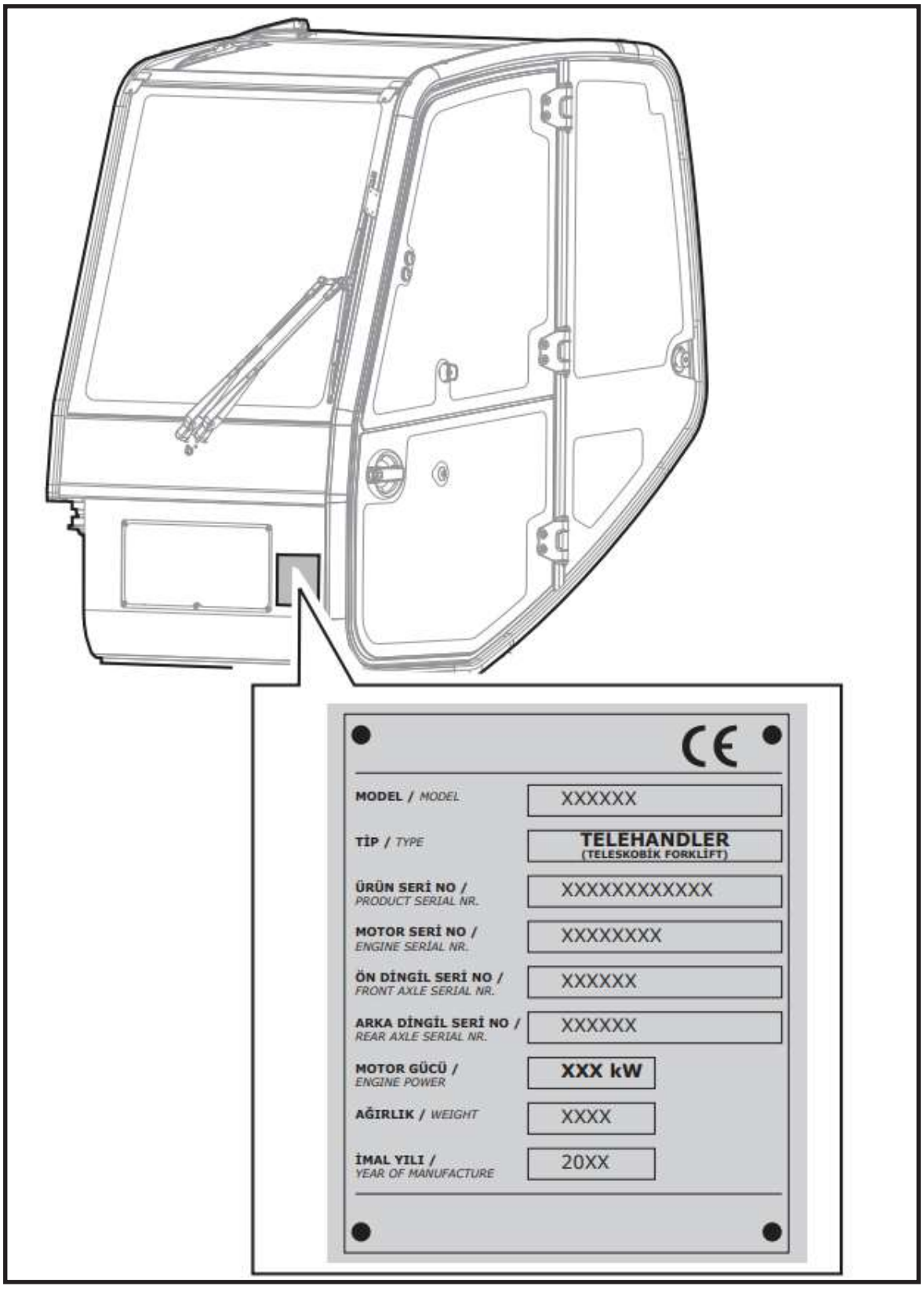

Steering Wheel Replacement
Removal

1. Park machine on a firm, level surface, level machine, fully retract boom, lower boom, place transmission in (N) NEUTRAL, engage park brake and shut engine OFF.
2. Place a Do Not Operate Tag on both ignition key switch and steering wheel.
3. Open engine covers. Allow system fluids to cool.
4. Properly disconnect the battery. Refer to Section — Battery, for procedure.

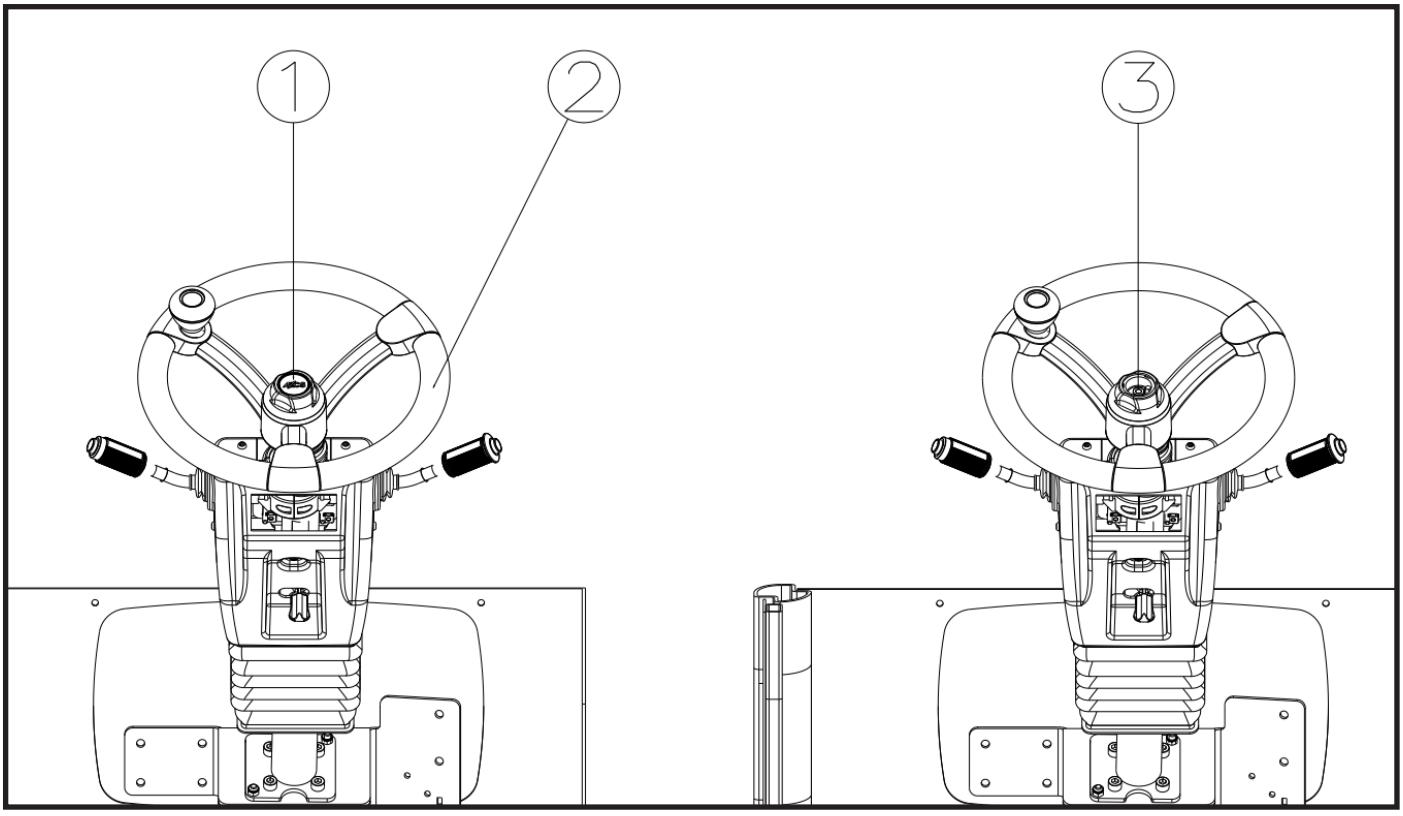

5. Carefully pry horn button (**1**) out of steering wheel (**2**).
6. Mark steering wheel and shaft to ensure proper installation. Remove nut (**3**) securing the steering wheel (**2**) to splined steering column shaft.
7. Use a steering wheel puller to remove steering wheel (**2**) from splined shaft.

Installation

1. Install steering wheel (**2**) onto splined steering column shaft.
2. Secure steering wheel with nut (**3**). Torque as required.
3. Press the horn button (**1**) onto steering wheel.
4. Properly connect the battery. Refer to Section — Battery, for procedure.
5. Close and secure engine covers.
6. Remove Do Not Operate Tag from ignition key switch and steering wheel.

Joystick Assembly

Removal

1. Park machine on a firm, level surface, level machine, fully retract boom, lower boom, place transmission in (N) NEUTRAL, engage park brake and shut engine OFF.
2. Place a Do Not Operate Tag on both ignition key switch and steering wheel.
3. Open engine cover. Allow system fluids to cool.
4. Properly disconnect the battery. Refer to Section — Battery, for procedure.
5. Remove the 4 connection bolts on console (**1**).

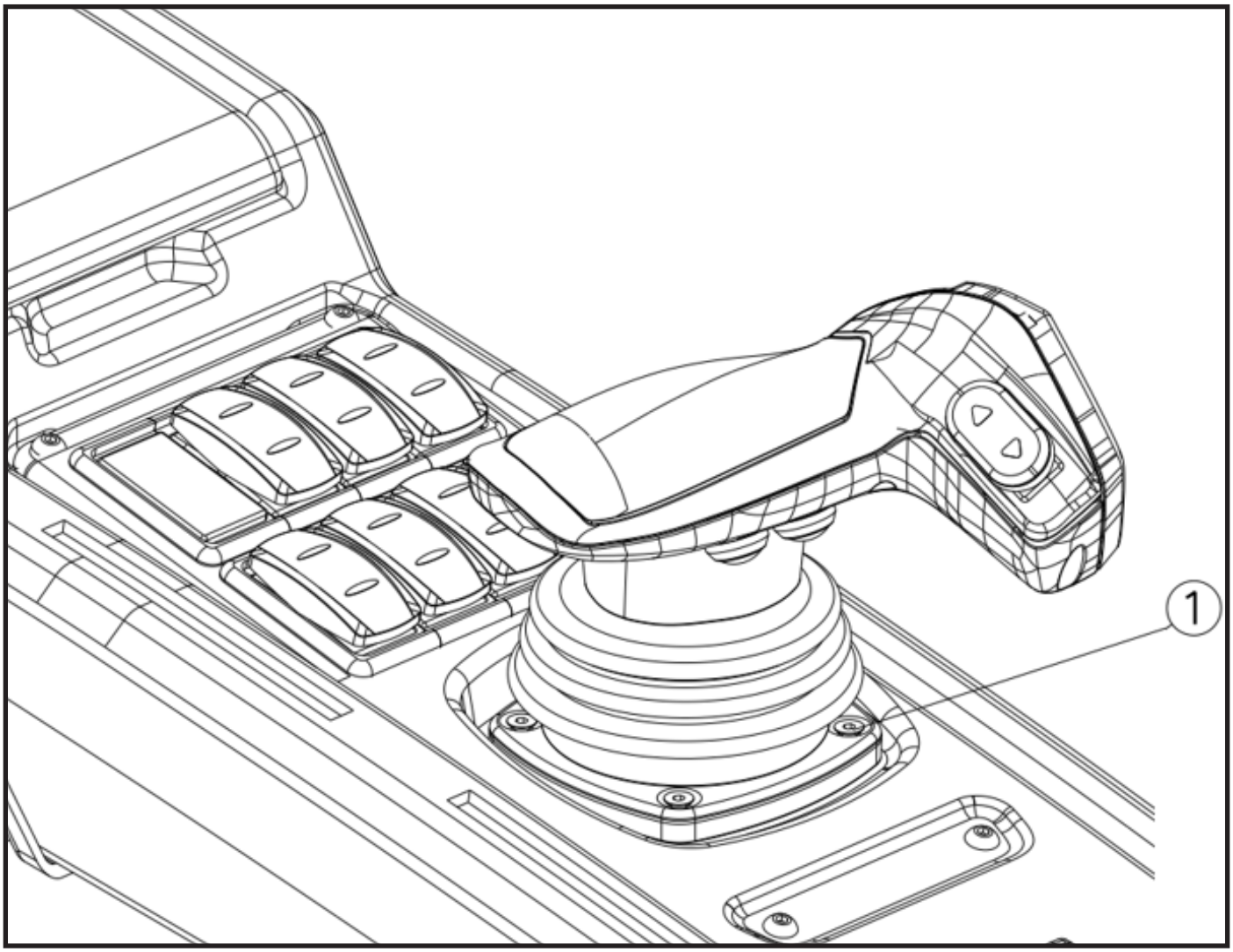

6. Disconnect the socket connected to the electrical installation.
7. Remove the Joystick assembly.

Installation

To install, reverse the removal procedure.

Seat Assembly
Removal

1. Park machine on a firm, level surface, level machine, fully retract boom, lower boom, place transmission in (N) NEUTRAL, engage park brake and shut engine OFF.
2. Place a Do Not Operate Tag on both ignition key switch and steering wheel.
3. Open engine covers. Allow system fluids to cool.
4. Properly disconnect the battery. Refer to Section — Battery, for procedure.

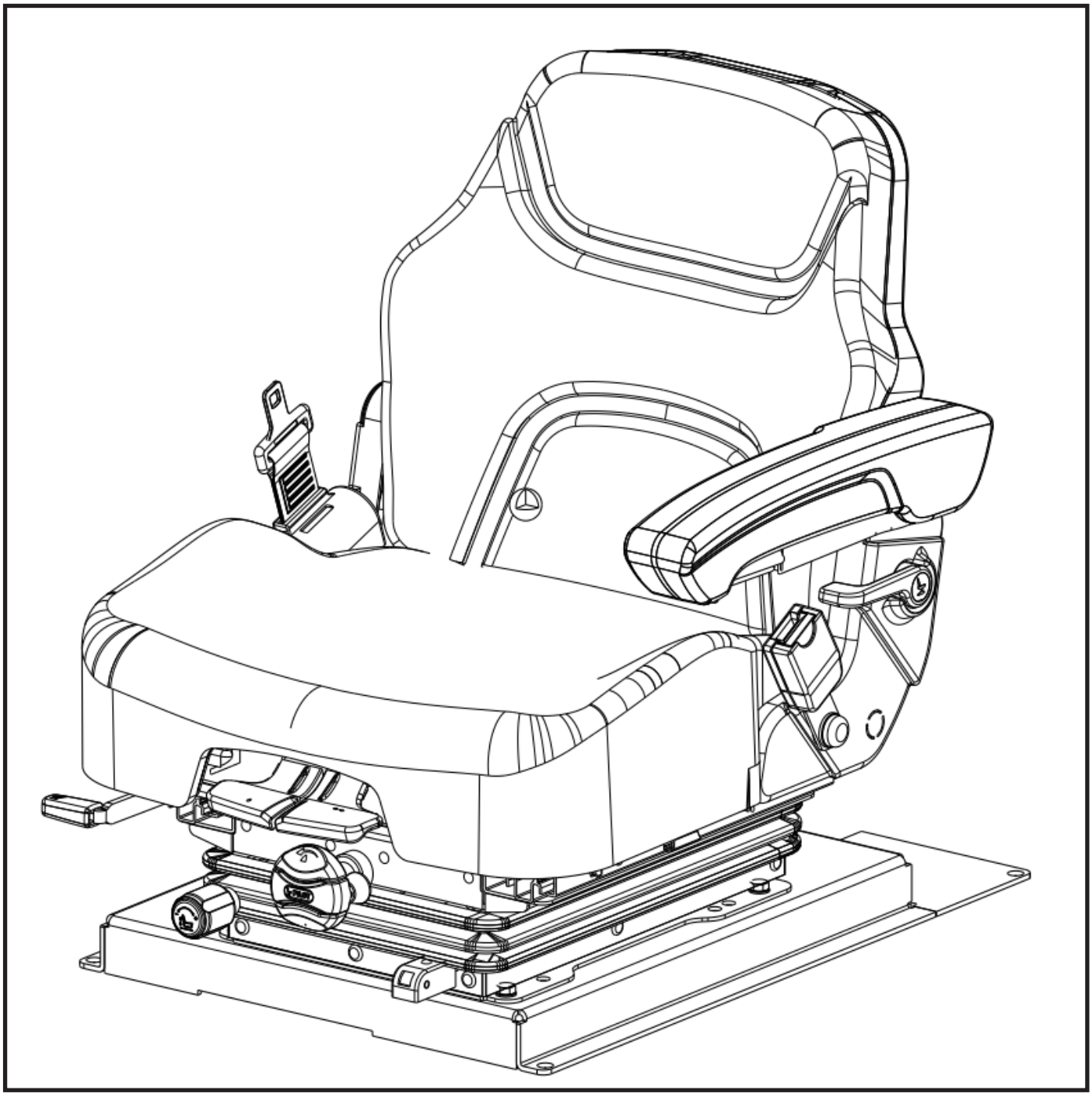

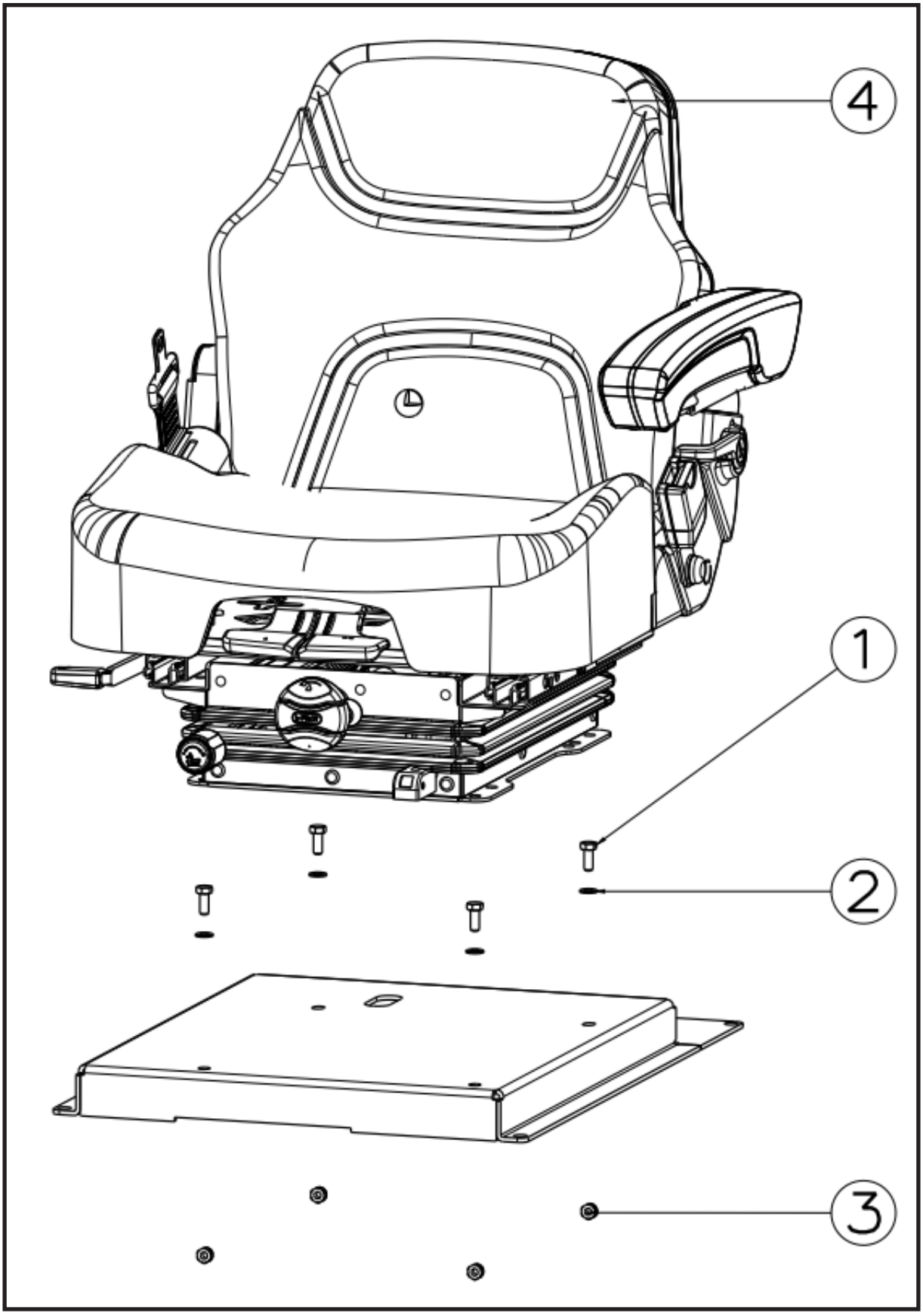

1	Bolt DIN 933, M8x20	**2**	Washer DIN 125, M8
3	Nut DIN 985, M8	**4**	Seat

5.Unscrew the seat mountings

6.Lift the seat out.

10.23.Electrical Components

Battery

NOTE: Be sure to wear eye protection before inspection and/or replacing the battery

Inspection

1. Park machine on a firm, level surface, level machine, fully retract boom, lower boom, place transmission in (N) NEUTRAL, engage park brake and shut engine OFF.
2. Place a Do Not Operate Tag on both ignition key switch and steering wheel.
3. Open engine cover. Allow system fluids to cool.
4. Remove bolts securing access panel (**1**) and remove panel.

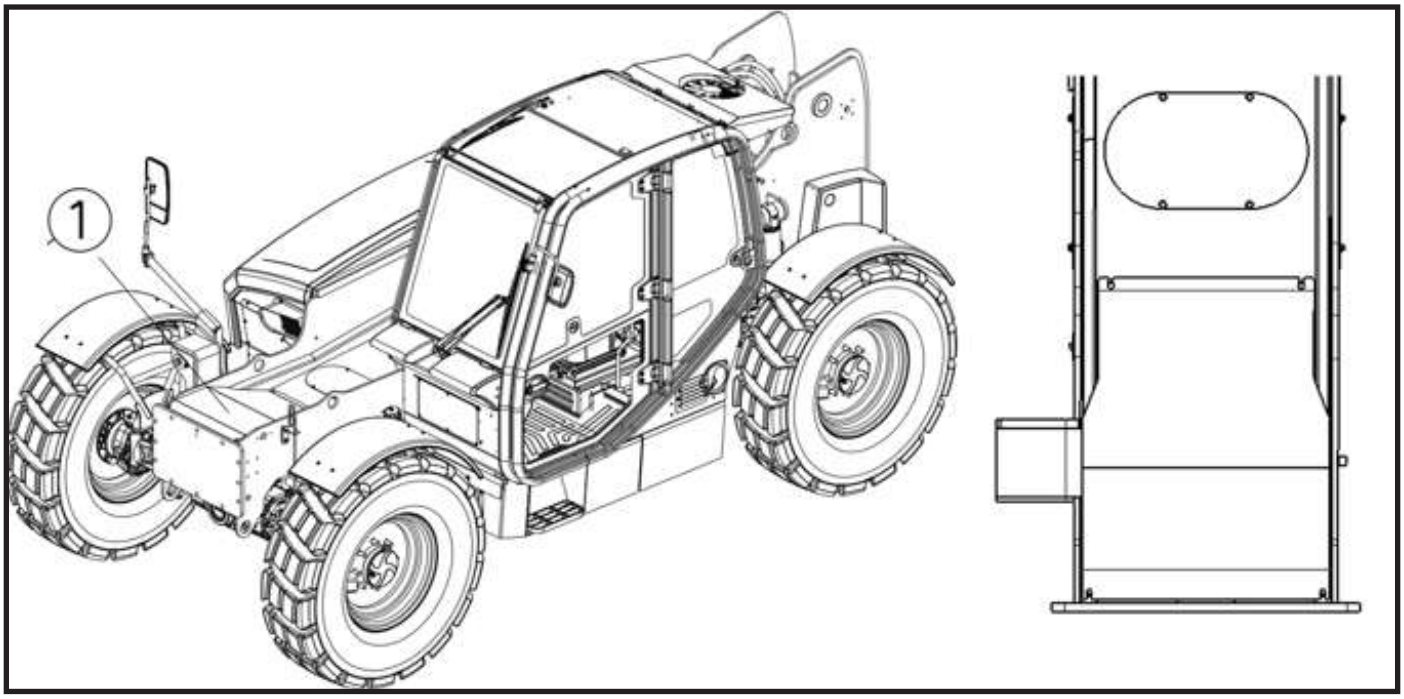

5. Visually inspect the battery(s).
6. Check terminals for corrosion.
7. Replace the battery if it has a cracked, melted or damaged case.
8. Install access cover (**1**) and secure with previously removed bolts.
9. Close and secure engine cover.
10. Remove boom support.
11. Remove Do Not Operate Tag from ignition key switch and steering wheel.

Removal

1. Park machine on a firm, level surface, level machine, fully retract boom, lift boom, place transmission in (N) NEUTRAL, engage park brake and shut engine OFF.
2. Properly support the boom.
3. Place a Do Not Operate Tag on both ignition key switch and steering wheel.
4. Open engine cover. Allow system fluids to cool.
5. Turn OFF electrical master switch.
6. Remove bolts securing access panel (**1**) and remove panel.
7. Disconnect negative and possitive cables.

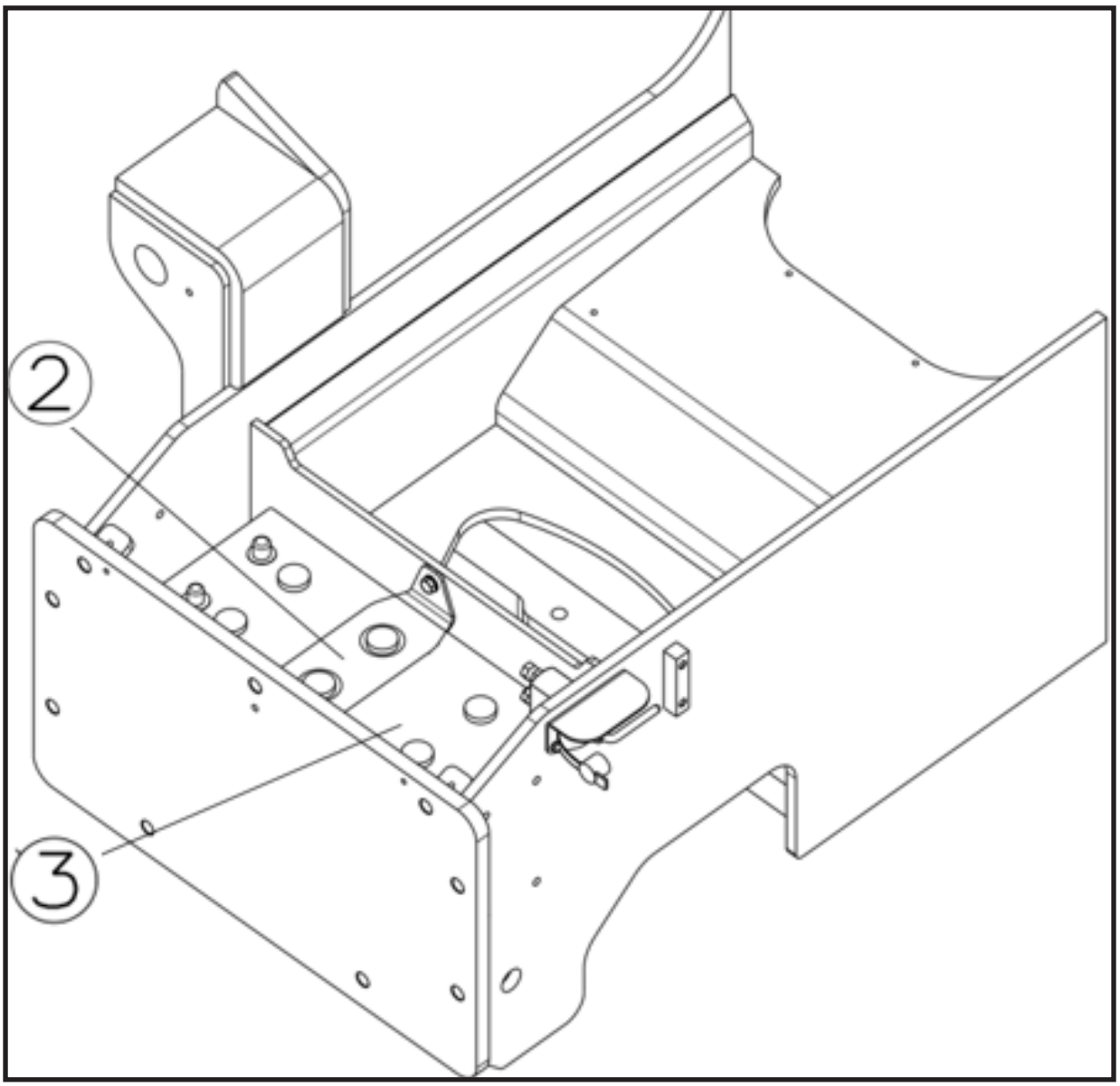

8.Remove bolts securing access panel (**1**) and remove panel.

9.Disconnect negative and possitive cables.

Installation

To install, reverse the removal procedure.

NOTE: Connect the possitive (**+**) terminal first, and then the negative (**-**) terminal.

10.24. Stabilizer Assembly — Removal and Installation

WARNING — Use lifting equipment with a rated capacity of at least 1.5 times (150%) the weight of the component being lifted. Refer to the component weight table in this manual.

Applies to TH-1044, TH-1056, TH-1256.

Component Weights (approximate)

Component	TH-1044	TH-1056	TH-1256
Stabilizer assembly, each side (incl. cylinder)	364 lb (165 kg)	441 lb (200 kg)	441 lb (200 kg)
Stabilizer cylinder	154 lb (70 kg)	176 lb (80 kg)	176 lb (80 kg)
Frame leveling (sway) cylinder	88 lb (40 kg)	99 lb (45 kg)	99 lb (45 kg)

Note: Weights are approximate. Select lifting equipment rated for at least 1.5 times (150%) the weight shown. The frame leveling (sway) cylinder is fitted on all five models; its weight on TH-842/944 is 88 lb (40 kg).

Removal

1. Park the machine on a firm, level surface. Fully raise the stabilizers, place the transmission in (N) NEUTRAL, engage the park brake switch and chock the wheels. Turn the engine off and place a Do Not Operate tag on the ignition key switch and the steering wheel.
2. If equipped, disconnect the stabilizer position sensor / switch connectors and free the harness from its clips on the stabilizer weldment.
3. Attach a lifting strap from an overhead crane to the stabilizer cylinder. Support the cylinder without applying lifting pressure.
4. Remove the retaining fasteners securing the cylinder rod-end pivot pin to the stabilizer weldment. Remove the pivot pin and carefully lower the rod end clear of the weldment. Secure the cylinder against the chassis; do not let it hang by the hoses.
5. Attach a lifting strap from the overhead crane to the stabilizer weldment. Support the weldment without applying lifting pressure.
6. Remove the retaining fasteners securing the stabilizer main pivot pin to the chassis.
7. Remove the main pivot pin and remove the stabilizer weldment from the machine. Place it on suitable supports; do not rest it on the pad face.

DANGER — Crushing hazard. The stabilizer weldment and the cylinder will fall when the pivot pins are removed if they are not properly supported by the lifting equipment.

Installation

1. Inspect the pivot bores and bushings for wear and scoring; replace worn bushings. Clean the pivot pins and apply [TBD] grease to the pins and bushings.
2. Using the lifting equipment, position the stabilizer weldment in the chassis mount, align the bores and install the main pivot pin. Install the pin retaining fasteners and torque to [TBD] ft-lb ([TBD] Nm).
3. Align the cylinder rod end with the weldment bore and install the rod-end pivot pin. Install the pin retaining fasteners and torque to [TBD] ft-lb ([TBD] Nm).
4. If equipped, reconnect the position sensor / switch connectors and secure the harness in its clips.
5. Grease the pivot points through the grease fittings (if equipped) with [TBD] grease.
6. Perform the Stabilizer and Frame Leveling Function Test. Refer to Section 4 of this document.

Stabilizer Cylinder — Removal and Installation

WARNING — Use lifting equipment with a rated capacity of at least 1.5 times (150%) the weight of the component being lifted. Refer to the component weight table in this manual.

WARNING — Bodily injury hazard. The stabilizer circuit contains double-acting lock valves which hold residual pressure in the cylinder and its lines even with the engine off. Loosen hydraulic connections very slowly and allow the pressure to dissipate gradually. Do not allow oil to spray. Wear eye protection.

Removal

1. Park the machine on a firm, level surface. Start the engine and extend the stabilizer until the pad just touches the ground so the cylinder is supported at both ends. Do not rest the weight of the machine on the stabilizer. Place the transmission in (N) NEUTRAL, engage the park brake switch and chock the wheels. Turn the engine off and place a Do Not Operate tag on the ignition key switch and the steering wheel.
2. Place a suitable container under the cylinder connections. Tag the hydraulic hoses for correct reconnection.
3. Loosen the hose connections at the cylinder very slowly and allow the residual pressure to dissipate, then disconnect the hoses. Plug the hoses and cap the cylinder fittings immediately.
4. Attach a lifting strap from an overhead crane to the cylinder barrel. Support the cylinder without applying lifting pressure.
5. Remove the retaining fasteners securing the rod-end pivot pin and remove the pin.
6. Remove the retaining fasteners securing the barrel-end pivot pin, remove the pin and remove the cylinder from the machine.

Installation

1. Inspect the pivot bores and bushings for wear; replace worn bushings. Apply [TBD] grease to the pins and bushings.
2. Using the lifting equipment, position the cylinder and install the barrel-end pivot pin. Install the pin retaining fasteners and torque to [TBD] ft-lb ([TBD] Nm).
3. Align the rod end and install the rod-end pivot pin. Install the pin retaining fasteners and torque to [TBD] ft-lb ([TBD] Nm).
4. Replace all fitting O-rings. Reconnect the hydraulic hoses to their tagged positions and torque the connections per Section 2.7 (Hydraulic Fittings).
5. Check the hydraulic tank fluid level and add fluid as required.
6. Perform the Stabilizer and Frame Leveling Function Test. Refer to Section 4 of this document.

Note: If the double-acting lock valve is removed from the cylinder or replaced, replace its sealing rings and torque the valve cartridge/connections to the valve manufacturer specification [TBD].

Frame Leveling (Sway) Valve — Removal and Installation

The frame leveling valve is mounted to the chassis and controls the frame leveling (sway) cylinders.

WARNING — Bodily injury hazard. The frame leveling circuit holds residual pressure after the engine is turned off. Relieve the system pressure and loosen hydraulic connections very slowly to allow the pressure to dissipate gradually. Do not allow oil to spray. Wear eye protection.

Removal

1. Park the machine on a firm, level surface with the frame level. Place the transmission in (N) NEUTRAL, engage the park brake switch and chock the wheels. Turn the engine off and place a Do Not Operate tag on the ignition key switch and the steering wheel.
2. Relieve the hydraulic system pressure. Refer to Section 8.
3. Clean the area around the valve before disconnecting any line.
4. Disconnect the electrical connectors from the valve solenoids.
5. Place a suitable container under the valve. Tag the hydraulic lines, loosen the connections slowly and disconnect the lines. Plug the lines and cap the valve ports immediately.
6. Support the valve, remove the four mounting bolts and remove the valve from the chassis.

Installation

1. If the fittings are being transferred to a new valve, install the male stud connectors and the pressure gauge test port fitting into the valve ports and tighten them. Cap all open fittings until the lines are connected.
2. Position the valve on the chassis in its original orientation.
3. Install the four M6 x 12 mounting bolts. Tighten the bolts in a star pattern, tightening each bolt diagonally opposite the previous one and torque them to 6.6 ft-lb (9 Nm).
4. Reconnect the hydraulic lines to their tagged positions with new fitting seals and torque the connections per Section 2.7 (Hydraulic Fittings).
5. Reconnect the electrical connectors to the valve solenoids.
6. Check the hydraulic tank fluid level and add fluid as required.
7. Perform the Stabilizer and Frame Leveling Function Test.

Note: A pressure gauge test port is fitted to the frame leveling valve. Use this port when checking the frame leveling circuit pressure. Refer to Section 8.2 for the pressure settings.

Stabilizer and Frame Leveling Function Test (after repair)

1. Start the engine. Operate each stabilizer through several full extend/retract cycles to purge air from the circuit. Verify smooth operation without jerking.
2. Check all disturbed hydraulic connections and the lock valve for leaks while cycling.
3. Verify the stabilizer interlocks operate as specified: [TBD].
4. Drift test: lower the stabilizers to lift the machine per the operator manual, mark the rod position, turn the engine off and wait [TBD] minutes. Measured rod movement must not exceed [TBD] in ([TBD] mm). Excessive drift indicates a leaking lock valve or cylinder seals.
5. Re-check the hydraulic tank fluid level. Remove the Do Not Operate tags.

Note: Stabilizer and sway circuit pressure settings are listed in Section 8.2. If pressures were disturbed during repair, verify them before returning the machine to service.

10.25.Brake Accumulator And Pilot Supply Block

General

The brake circuit uses two hydraulic accumulators. The larger accumulator serves the service brake circuit and is mounted on a bracket on the inside of the chassis. The smaller accumulator is mounted on the pilot supply block, which also carries the park brake bracket. The park brake is spring applied and hydraulically released (SAHR): loss of pressure in the release circuit applies the park brake.

DANGER — Stored energy hazard. Hydraulic accumulators remain charged after the engine is turned off and hold pressure even when the hydraulic system is otherwise relieved. Discharge the accumulators before disconnecting any line or removing any component in the brake circuit. Never disassemble, drill, cut or weld an accumulator, and never expose it to heat or flame.

Accumulator Data

Accumulator	Type	Capacity	Pre-charge pressure
Service brake circuit	Bladder, SBO210 series	1.4 L	290 psi (20 bar)
Pilot supply block	Bladder	0.7 L	[TBD]

Note: Pre-charge pressure is measured with nitrogen only. Never charge an accumulator with any other gas.

Discharging the Accumulators

Perform this procedure before any work on the brake circuit, and before removing an accumulator, the pilot supply block, the brake valve or any brake line.

1. Park the machine on a firm, level surface. Fully retract and lower the boom, place the transmission in (N) NEUTRAL and chock the wheels.
2. Turn the engine off and place a Do Not Operate tag on the ignition key switch and the steering wheel.
3. Discharge the brake accumulators: [TBD].
4. Verify the accumulators are discharged before loosening any connection. Loosen the first connection very slowly and confirm no pressure remains.

WARNING — Bodily injury hazard. The park brake is spring applied and hydraulically released. Chock the wheels before working on the brake circuit; do not rely on the park brake alone.

Service Brake Accumulator — Removal and Installation

DANGER — Stored energy hazard. Hydraulic accumulators remain charged after the engine is turned off and hold pressure even when the hydraulic system is otherwise relieved. Discharge the accumulators before disconnecting any line or removing any component in the brake circuit. Never disassemble, drill, cut or weld an accumulator, and never expose it to heat or flame.

Removal

1. Discharge the accumulators. Refer to Discharging the Accumulators.
2. Clean the area around the accumulator connections.
3. Place a suitable container under the connections. Tag the hydraulic lines, loosen the connections very slowly and disconnect the lines. Plug the lines and cap the fittings immediately.
4. Support the accumulator, remove the two bracket bolts and washers and remove the accumulator with its fittings from the chassis. The accumulator is heavy; do not let it drop.
5. If the accumulator is being replaced, transfer the fittings: hold the accumulator securely, then remove the swivel nut run tee, the bulkhead fitting and the locknut.

Installation

1. Assemble the fittings to the accumulator: fit the sealed bulkhead fitting and locknut from below and the accumulator from above, so the accumulator and the fittings are seated against each other.
2. Fit the washers to the two M8 bolts.
3. Position the accumulator bracket on the inside of the chassis and install the bolts through the bracket. Torque the bolts to 16 ft-lb (22 Nm).
4. Mount the assembled accumulator to the bracket from above and below and tighten the connections.
5. Reconnect the hydraulic lines to their tagged positions with new fitting seals and torque the connections per Section 2.7 (Hydraulic Fittings).
6. Check the hydraulic tank fluid level and add fluid as required.
7. Perform the Brake Circuit Function Test.

Pilot Supply Block and Park Brake Bracket — Removal and Installation

DANGER — Stored energy hazard. Hydraulic accumulators remain charged after the engine is turned off and hold pressure even when the hydraulic system is otherwise relieved. Discharge the accumulators before disconnecting any line or removing any component in the brake circuit. Never disassemble, drill, cut or weld an accumulator, and never expose it to heat or flame.

Removal

1. Discharge the accumulators. Refer to Discharging the Accumulators.
2. Clean the area around the block. Disconnect the electrical connectors from the block.
3. Place a suitable container under the block. Tag the hydraulic lines, loosen the connections very slowly and disconnect the lines. Plug the lines and cap the fittings immediately.
4. Remove the two M6 bolts and washers securing the assembly to the brake and remove the assembly from the machine.
5. Remove the two M8 bolts and washers securing the park brake bracket to the block and separate the bracket.
6. Remove the accumulator and its nipple from the left side of the block.

Installation

1. Inspect the block. Verify all blanking plugs are in place and undamaged.
2. Remove the blanking plugs only from the ports that are to be connected. Install the male stud connectors in the upper ports and in the front port of the block and tighten them. Keep the block covered while the ports are open; any dirt entering the block will damage the brake circuit.
3. Install the nipple and the accumulator on the left side of the block and tighten them.
4. Fit the washers to the two M8 bolts and secure the park brake bracket to the block. Torque the bolts to 16 ft-lb (22 Nm).
5. Fit the washers to the two M6 bolts and mount the assembly to the brake. Torque the bolts to 6.6 ft-lb (9 Nm).
6. Reconnect the hydraulic lines to their tagged positions with new fitting seals and torque the connections per Section 2.7 (Hydraulic Fittings).
7. Reconnect the electrical connectors.
8. Check the hydraulic tank fluid level and add fluid as required.
9. Perform the Brake Circuit Function Test.

Accumulator Pre-charge Check

Check the pre-charge pressure at the intervals given in Section 3, and whenever the brake circuit shows a reduced number of brake applications with the engine off, slow brake response or repeated brake warning indications.

DANGER — Stored energy hazard. Hydraulic accumulators remain charged after the engine is turned off and hold pressure even when the hydraulic system is otherwise relieved. Discharge the accumulators before disconnecting any line or removing any component in the brake circuit. Never disassemble, drill, cut or weld an accumulator, and never expose it to heat or flame.

1. Discharge the accumulators. Refer to Discharging the Accumulators.
2. Remove the protective cap from the gas valve at the top of the accumulator.
3. Fit a nitrogen charging and gauging assembly to the gas valve.
4. Read the pre-charge pressure. Compare the reading with the value in the Accumulator Data table. The pre-charge must be checked with the hydraulic side fully discharged; a reading taken with hydraulic pressure present is not valid.
5. If the pre-charge is low, charge the accumulator with nitrogen only, in small increments, until the specified pressure is reached.
6. Remove the charging assembly, check the gas valve for leaks and install the protective cap.

WARNING — Bodily injury hazard. Use nitrogen only. Charging an accumulator with oxygen or compressed air can cause an explosion.

Brake Circuit Function Test (after repair)

1. Start the engine and allow the accumulators to charge.
2. Check all disturbed connections for leaks.
3. Apply and release the service brake several times and verify the brake responds without delay and the pedal feel is consistent.
4. Verify the park brake applies and releases correctly, and that the park brake indication on the display follows the switch position.
5. Verify the brake warning indication does not remain on with the engine running.
6. Bleed the brake circuit if any line was opened. Refer to [TBD].

Re-check the hydraulic tank fluid level. Remove the Do Not Operate tags and the wheel chocks.

General

The brake circuit uses two hydraulic accumulators. The larger accumulator serves the service brake circuit and is mounted on a bracket on the inside of the chassis. The smaller accumulator is mounted on the pilot supply block, which also carries the park brake bracket. The park brake is spring applied and hydraulically released (SAHR): loss of pressure in the release circuit applies the park brake.

DANGER — Stored energy hazard. Hydraulic accumulators remain charged after the engine is turned off and hold pressure even when the hydraulic system is otherwise relieved. Discharge the accumulators before disconnecting any line or removing any component in the brake circuit. Never disassemble, drill, cut or weld an accumulator, and never expose it to heat or flame.

Accumulator Data

Accumulator	Type	Capacity	Pre-charge pressure
Service brake circuit	Bladder, SBO210 series	1.4 L	290 psi (20 bar)
Pilot supply block	Bladder	0.7 L	[TBD]

Note: Pre-charge pressure is measured with nitrogen only. Never charge an accumulator with any other gas.

Discharging the Accumulators

Perform this procedure before any work on the brake circuit, and before removing an accumulator, the pilot supply block, the brake valve or any brake line.

1. Park the machine on a firm, level surface. Fully retract and lower the boom, place the transmission in (N) NEUTRAL and chock the wheels.
2. Turn the engine off and place a Do Not Operate tag on the ignition key switch and the steering wheel.
3. Discharge the brake accumulators: [TBD].
4. Verify the accumulators are discharged before loosening any connection. Loosen the first connection very slowly and confirm no pressure remains.

WARNING — Bodily injury hazard. The park brake is spring applied and hydraulically released. Chock the wheels before working on the brake circuit; do not rely on the park brake alone.

Service Brake Accumulator — Removal and Installation

DANGER — Stored energy hazard. Hydraulic accumulators remain charged after the engine is turned off and hold pressure even when the hydraulic system is otherwise relieved. Discharge the accumulators before disconnecting any line or removing any component in the brake circuit. Never disassemble, drill, cut or weld an accumulator, and never expose it to heat or flame.

Removal

1. Discharge the accumulators. Refer to Discharging the Accumulators.
2. Clean the area around the accumulator connections.
3. Place a suitable container under the connections. Tag the hydraulic lines, loosen the connections very slowly and disconnect the lines. Plug the lines and cap the fittings immediately.
4. Support the accumulator, remove the two bracket bolts and washers and remove the accumulator with its fittings from the chassis. The accumulator is heavy; do not let it drop.
5. If the accumulator is being replaced, transfer the fittings: hold the accumulator securely, then remove the swivel nut run tee, the bulkhead fitting and the locknut.

Installation

1. Assemble the fittings to the accumulator: fit the sealed bulkhead fitting and locknut from below and the accumulator from above, so the accumulator and the fittings are seated against each other.
2. Fit the washers to the two M8 bolts.
3. Position the accumulator bracket on the inside of the chassis and install the bolts through the bracket. Torque the bolts per Section 2.6 (Torque Charts).
4. Mount the assembled accumulator to the bracket from above and below and tighten the connections.
5. Reconnect the hydraulic lines to their tagged positions with new fitting seals and torque the connections per Section 2.7 (Hydraulic Fittings).
6. Check the hydraulic tank fluid level and add fluid as required.
7. Perform the Brake Circuit Function Test.

Pilot Supply Block and Park Brake Bracket — Removal and Installation

DANGER — Stored energy hazard. Hydraulic accumulators remain charged after the engine is turned off and hold pressure even when the hydraulic system is otherwise relieved. Discharge the accumulators before disconnecting any line or removing any component in the brake circuit. Never disassemble, drill, cut or weld an accumulator, and never expose it to heat or flame.

Removal

1. Discharge the accumulators. Refer to Discharging the Accumulators.
2. Clean the area around the block. Disconnect the electrical connectors from the block.
3. Place a suitable container under the block. Tag the hydraulic lines, loosen the connections very slowly and disconnect the lines. Plug the lines and cap the fittings immediately.
4. Remove the two M6 bolts and washers securing the assembly to the brake and remove the assembly from the machine.
5. Remove the two M8 bolts and washers securing the park brake bracket to the block and separate the bracket.
6. Remove the accumulator and its nipple from the left side of the block.

Installation

1. Inspect the block. Verify all blanking plugs are in place and undamaged.
2. Remove the blanking plugs only from the ports that are to be connected. Install the male stud connectors in the upper ports and in the front port of the block and tighten them. Keep the block covered while the ports are open; any dirt entering the block will damage the brake circuit.
3. Install the nipple and the accumulator on the left side of the block and tighten them.
4. Fit the washers to the two M8 bolts and secure the park brake bracket to the block. Torque the bolts per Section 2.6 (Torque Charts).
5. Fit the washers to the two M6 bolts and mount the assembly to the brake. Torque the bolts per Section 2.6 (Torque Charts).
6. Reconnect the hydraulic lines to their tagged positions with new fitting seals and torque the connections per Section 2.7 (Hydraulic Fittings).
7. Reconnect the electrical connectors.
8. Check the hydraulic tank fluid level and add fluid as required.
9. Perform the Brake Circuit Function Test.

10.26.Counterweight

The counterweight is bolted to the rear of the chassis by four bolts and is fitted with lifting eyes for handling.

WARNING — Use lifting equipment with a rated capacity of at least 1.5 times (150%) the weight of the component being lifted. Refer to the component weight table in this manual.

DANGER — Crushing hazard. The counterweight is heavy and will fall when the mounting bolts are removed if it is not supported. Attach the lifting equipment to the lifting eyes on the counterweight before removing any bolt, and do not stand behind or under the counterweight while it is suspended.

Component Weights (approximate)

Model	TH-842	TH-944	TH-1044	TH-1056 / TH-1256
Counterweight	2,116 lb (960 kg)	2,116 lb (960 kg)	2,976 lb (1,350 kg)	2,425 lb (1,100 kg) / 3,417 lb (1,550 kg)

Removal and Installation

1. Park the machine on a firm, level surface, place the transmission in (N) NEUTRAL, engage the park brake switch and chock the wheels. Turn the engine off and place a Do Not Operate tag on the ignition key switch and the steering wheel.
2. Attach the lifting equipment to the lifting eyes on the counterweight and take up the slack. Support the counterweight without lifting it.
3. Remove the four M20 mounting bolts and remove the counterweight from the machine. Lower it onto suitable supports.
4. **Installation:** Bring the counterweight up to the rear of the chassis under control and align the mounting holes.
5. Install the four M20 bolts and torque them to 406 ft-lb (550 Nm).
6. Disconnect the lifting equipment only after all four bolts are installed and torqued.
7. Remove the Do Not Operate tags and the wheel chocks.

Note: The counterweight is part of the machine stability system. Do not operate the machine with the counterweight removed, and do not fit a counterweight from another model.

11.DISASSEMBLY AND ASSEMBLY

11.1.Axle Assembly

11.1.Axle Assembly (TH-842, TH-944 and TH-1044)

Specifications
Idefinition of Viewpoints

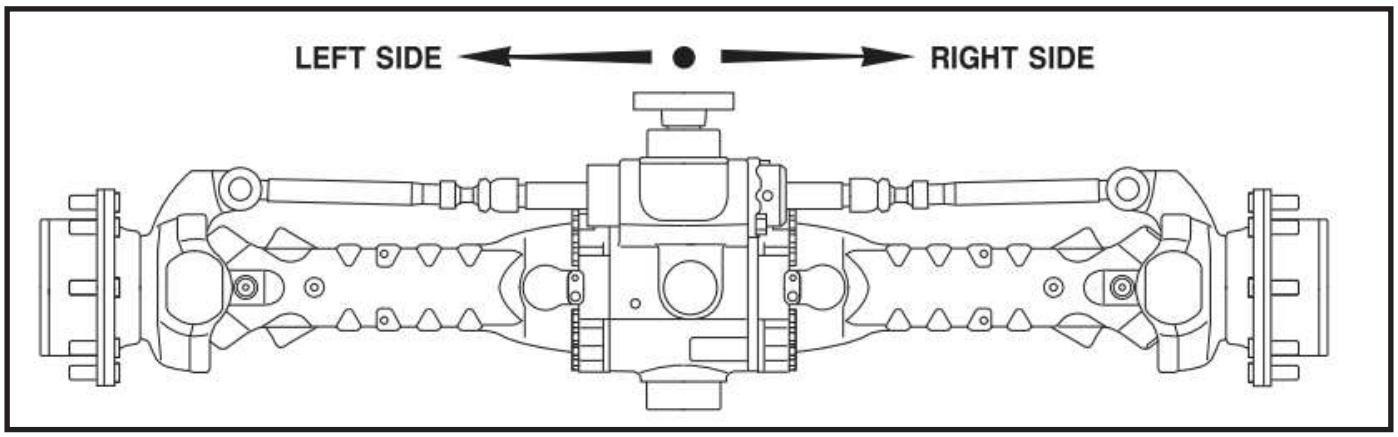

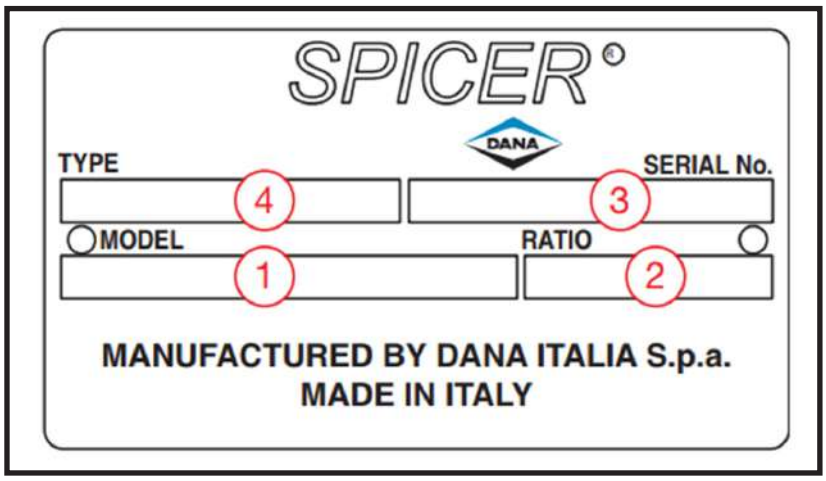

1- Model Number
2- Reduction Ratio
3- Serial Number
4- Axle Number

Torque Specifications
Coarse Pitch

Size of bolt	Type of bolt					
	8.8	8.8 + Loctite 270	10.9	10.9 + Loctite 270	12.9	12.9 + Loctite 270
M6 x 1 mm	9,5 - 10,5 N·m	10,5 - 11,5 N·m	14,3 - 15,7 N·m	15,2 - 16,8 N·m	16,2 - 17,8 N·m	18,1 - 20 N·m
M8 x 1,25 mm	23,8 - 26,2 N·m	25,6 - 28,4 N·m	34,2 - 37,8 N·m	36,7 - 40,5 N·m	39 - 43 N·m	43,7 - 48,3 N·m
M10 x 1,5 mm	48 - 53 N·m	52 - 58 N·m	68 - 75 N·m	73 - 81 N·m	80 - 88 N·m	88 - 97 N·m
M12 x 1,75 mm	82 - 91 N·m	90 - 100 N·m	116 - 128 N·m	126 - 139 N·m	139 - 153 N·m	152 - 168 N·m
M14 x 2 mm	129 - 143 N·m	143 - 158 N·m	182 - 202 N·m	200 - 221 N·m	221 - 244 N·m	238 - 263 N·m
M16 x 2 mm	200 - 221 N·m	219 - 242 N·m	283 - 312 N·m	309 - 341 N·m	337 - 373 N·m	371 - 410 N·m
M18 x 2,5 mm	276 - 305 N·m	299 - 331 N·m	390 - 431 N·m	428 - 473 N·m	466 - 515 N·m	509 - 562 N·m
M20 x 2,5 mm	390 - 431 N·m	428 - 473 N·m	553 - 611 N·m	603 - 667 N·m	660 - 730 N·m	722 - 798 N·m
M22 x 2,5 mm	523 - 578 N·m	575 - 635 N·m	746 - 824 N·m	817 - 903 N·m	893 - 987 N·m	974 - 1076 N·m
M24 x 3 mm	675 - 746 N·m	732 - 809 N·m	950 - 1050 N·m	1040 - 1150 N·m	1140 - 1260 N·m	1240 - 1370 N·m
M27 x 3 mm	998 - 1103 N·m	1088 - 1202 N·m	1411 - 1559 N·m	1539 - 1701 N·m	1710 - 1890 N·m	1838 - 2032 N·m
M30 x 3,5 mm	1378 - 1523 N·m	1473 - 1628 N·m	1914 - 2115 N·m	2085 - 2305 N·m	2280 - 2520 N·m	2494 - 2757 N·m

Fine Pitch

Size of bolt	Type of bolt					
	8.8	8.8 + Loctite 270	10.9	10.9 + Loctite 270	12.9	12.9 + Loctite 270
M8 x 1 mm	25,7 - 28,3 N·m	27,5 - 30,5 N·m	36,2 - 39,8 N·m	40 - 44 N·m	42,8 - 47,2 N·m	47,5 - 52,5 N·m
M10 x 1,25 mm	49,4 - 54,6 N·m	55,2 - 61 N·m	71,5 - 78,5 N·m	78 - 86 N·m	86 - 94 N·m	93 - 103 N·m
M12 x 1,25 mm	90 - 100 N·m	98 - 109 N·m	128 - 142 N·m	139 - 154 N·m	152 - 168 N·m	166 - 184 N·m
M12 x 1,5 mm	86 - 95 N·m	94 - 104 N·m	120 - 132 N·m	133 - 147 N·m	143 - 158 N·m	159 - 175 N·m
M14 x 1,5 mm	143 - 158 N·m	157 - 173 N·m	200 - 222 N·m	219 - 242 N·m	238 - 263 N·m	261 - 289 N·m
M16 x 1,5 mm	214 - 236 N·m	233 - 257 N·m	302 - 334 N·m	333 - 368 N·m	361 - 399 N·m	394 - 436 N·m
M18 x 1,5 mm	312 - 345 N·m	342 - 378 N·m	442 - 489 N·m	485 - 536 N·m	527 - 583 N·m	580 - 641 N·m
M20 x 1,5 mm	437 - 483 N·m	475 - 525 N·m	613 - 677 N·m	674 - 745 N·m	736 - 814 N·m	808 - 893 N·m
M22 x 1,5 mm	581 - 642 N·m	637 - 704 N·m	822 - 908 N·m	903 - 998 N·m	998 - 1103 N·m	1078 - 1191 N·m
M24 x 2 mm	741 - 819 N·m	808 - 893 N·m	1045 - 1155 N·m	1140 - 1260 N·m	1235 - 1365 N·m	1363 - 1507 N·m
M27 x 2 mm	1083 - 1197 N·m	1178 - 1302 N·m	1520 - 1680 N·m	1672 - 1848 N·m	1834 - 2027 N·m	2000 - 2210 N·m
M30 x 2 mm	1511 - 1670 N·m	1648 - 1822 N·m	2138 - 2363 N·m	2332 - 2577 N·m	2565 - 2835 N·m	2788 - 3082 N·m

Wheel Nut Tightening Torques

WHEEL NUT TIGHTENING TORQUES				
CHARACTERIS-TICS	ILLUSTRATION	WHEEL STUD THREAD	RECOMMENDED WHEEL NUTS TORQUE	
			RIM MATERIAL QUALITY	
			ST-37	ST-52
WHEEL NUTS WITH INTEGRAT-ED SPHERICAL COLLAR	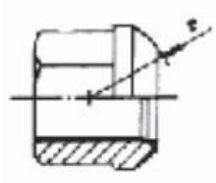	M18X1,5 mm	330 N·m	460 N·m
		M20X1,5 mm	490 N·m	630 N·m
		M22X1,5 mm	630 N·m	740 N·m
FLAT COLLAR WHEEL NUTS WITH SEPARATE SPHERICAL LOCK WASHER	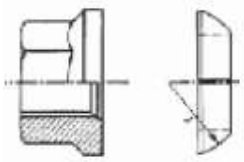	M18X1,5 mm	270 N·m	360 N·m
		M20X1,5 mm	360 N·m	450 N·m
		M22X1,5 mm	460 N·m	550 N·m
WHEEL NUTS WITH INTEGRATE SEAT CAPTIVE WASHER	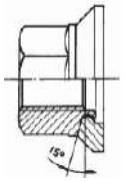	M18X1,5 mm	260 N·m	360 N·m
		M20X1,5 mm	350 N·m	500 N·m
		M22X1,5 mm	450 N·m	650 N·m

Maintenance Points

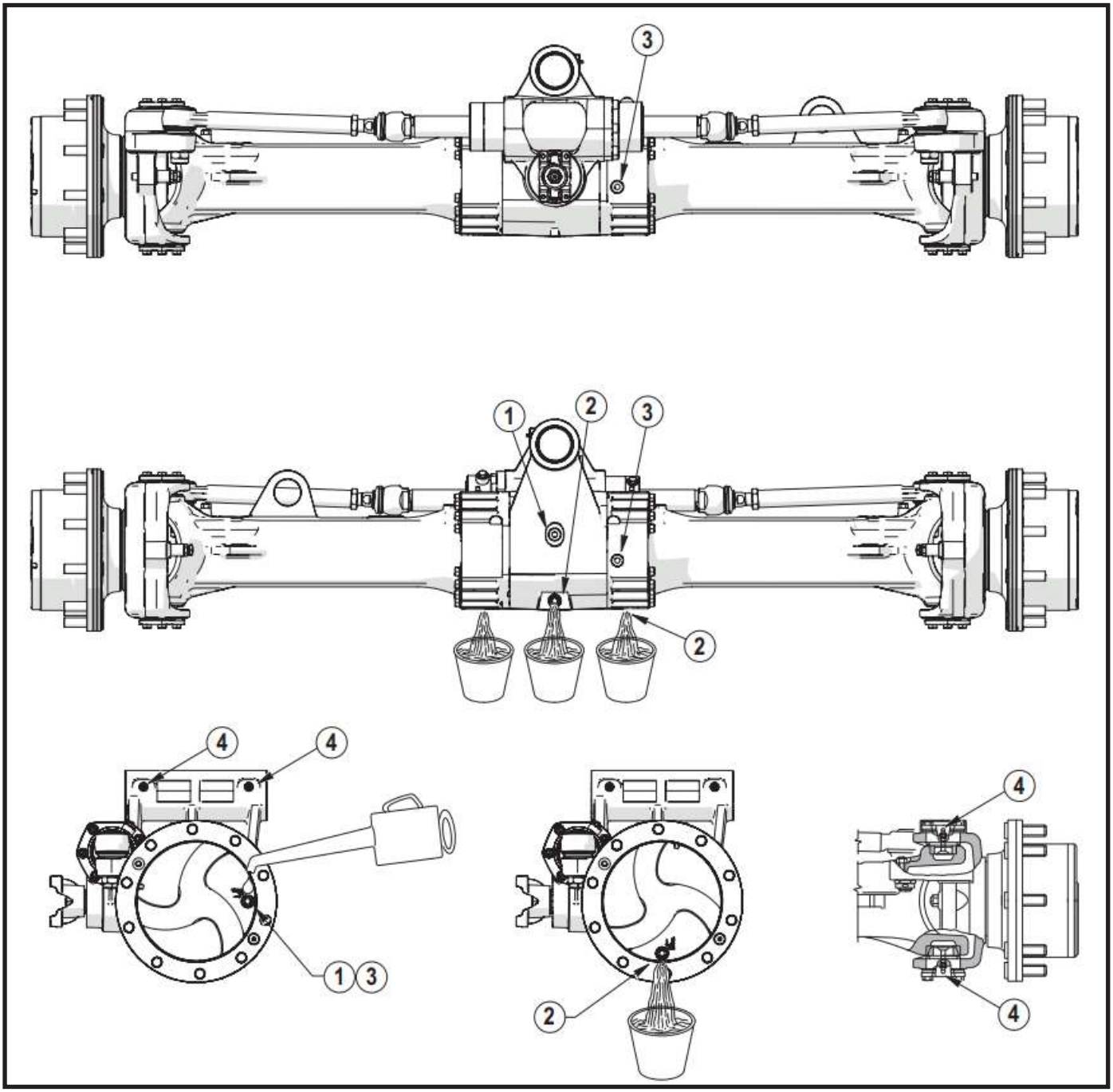

1- Oil fill plug
2- Oil drain plug
3- Check level plug
4- Grease zerk

Oil Draining Mandatory Procedure

WARNING!

• Do not attempt any maintenance if the axle is hot (104-122°F / 40-50°C). Hot oil and components can cause personal injury. Avoid skin contact. Wear protective gloves and glasses.

• Make sure all fluids are contained during inspection, maintenance, tests, adjustment and repair of the product. Prepare a suitable container to collect the fluid before removing any component containing fluids. Dispose of all fluids following legal and local regulations.

CENTRAL HOUSING

Before draining oil it is mandatory to loosen the oil filling plug or the breather (if present), and wait until the internal pressure is completely released. Remove the oil draining plug and drain oil only when the pressure is completely released.

PLANETARY GEAR REDUCTION

Before draining oil it is mandatory to rotate the planetary gear reduction in order to move the oil plug in filling position, then loosen the oil plug and wait until the internal pressure is completely released. Remove the oil plug and drain oil only when the pressure is completely released.

Maintenance Intermissions

OPERATION	COMPARTMENT	1st CHANGE / CHECK (whs	FREQUENCY (whs)	LUBRICANTS	REMARKS
Oil level check All		10 whs	Monthly	For details see below	Carefully clean oil magnetic plugs and speed sensors**.
Oil Change	Differential	100-250 whs max. *	1000 whs	Central body with standard bevel gear - UTTO (API GL4) J20/C; or gear: SAE 80W/90 (API GL4 or GL5) (1)	(1) If with limited slip differential, and/or wet brakes, use LS additivated oils. Carefully clean oil magnetic plugs and speed sensors **.
				Central body with hypoid bevel gear - SAE 80W/90 (API GL5) (1)	
	Hub Reduction	100-250 whs max.		UTTO (API GL4) J20/C; or gear: SAE 80W/90 (API GL4 or GL5)	Carefully clean oil magnetic plugs and speed sensors **
	Dropbox / Transmission**	100-250 whs max. *		Gears and wet discs clutch - ATF oil e.g. GM Dexron IIE, Dexron III	Carefully clean oil magnetic plugs and speed sensors **. * in accordance with Machine Service requirements.
				Only gears- UTTO J20/C, or gear: SAE 80W/90 (API GL4 or GL5)	
Adjustment	Negative brake (SAHR)	100 whs	Every 500 whs	For hydraulic actuations (brakes, SAHR, 100% diff. lock, etc.) use ATF oil e.g. GM Dexron IIE, Dexron III	Not applicable
	Service brake				DOT brake fl uids oils are NOT compati- ble w/ std oils
Tightening	Wheel nuts	10 whs	Every 200 whs	No lubricant allowed	Check for any damage or corrosion of treads or mating surfaces.
Greasing	King Pin Tapered Roller Bearings	10 whs	Normal work – Weekly or Severe duty – Daily	NLGI2 EP or NLGI3 EP	Supply grease until clean grease is vis- ible from outside. Grease performance level acc. to: According to DIN 51825 level KP2K-30 (NLGI2) or KP3K-20 (NLGI3); ASTM D4950 NLGI2 GC-LB
	Seals	10 whs			
	King Pin Bushings	10 whs		NLGI2 EP or NLGI3 EP with Moly Addittive	

In case of severe duty, half oil change intervals must be applied.

In case of extreme enviroments, chatter noise, reduce oil change intervals accordingly.

In case of extremely low ambient temperatures (<-4°F (-20°C)), use appropriate oils w/ low viscosity: UTTO J20/D (std Bevel Gears), SAE 75W/90 API GL5 LS (Hypoid Bevel Gears: i.e. axle models 192, 193, 194).

API GL5: Acc. To MIL L-2105-B document rev.02_18122018

See PSB 00279 (latest update) for more info regarding lubricants and viscosity grades.

**Where present.

SAFETY PRECAUTIONS

1- During all operations described in this manual, the axle should be fastened onto a trestle, while the other parts mentioned should rest on supporting benches.

2- When removing one of the arms, an anti-tilting safety trestle should be placed under the other arm.

3- When working on an arm that is fitted on the machine, make sure that the supporting trestles are correctly positioned and that the machine is locked lengthways.

4- Do not admit any other person inside the work area; mark off the area, hang warning signs and remove the ignition key from the machine.

5- Use only clean, quality tools; discard all worn, damaged, lowquality or improvised wrenches and tools. Ensure that all torque wrenches have been checked and calibrated.

6- During maintenance operations, always wear protective glasses, safety footwear, protective gloves and all P.P.E. (Personal Protective Equipment) in function of the risks which the workers may be exposed to.

7- Should you stain a surface with oil, remove marks straight away.

8- Dispose of all lubricants, seals, rags and solvents once work has been completed. Treat them as special waste and dispose of them according to the relative law provisions obtaining in the country where the axles are being overhauled.

9- Make sure that only weak solvents are used for cleaning purposes; avoid using turpentine, dilutants and toluol, xylolbased or similar solvents; use light solvents such as Kerosene, mineral spirits or water-based, environment friendly solvents.

10- For the sake of clarity, the parts that do not normally need to be removed have not been reproduced in some of the diagrams.

11- For agricultural axles, the terms RIGHT and LEFT refer to the position from operator's seat. For construcition axle, the terms RIGHT and LEFT refer to the position outside facing the machine (with the input drive facing forward).

12- After repair work has been completed, accurately touch up any coated part that may have been damaged.

13- Follow all safety instructions in the Original Equipment Manufacturer (OEM) manual that came with the vehicle.

14- Before draining oil, release the internal pressure, for details see OIL DRAINING MANDATORY PROCEDURE.

	DANGER	Indicates an imminently hazardous situation which, if not avoided, will result in death or serious injury.
	WARNING	Indicates an imminently hazardous situation which, if not avoided, could result in death or serious injury
İ	COUTION	Indicates a situation which, if not avoided, may result in damage to components.
	NOTICE	Indicates information which may make product service easier to perform.

TRUNNION

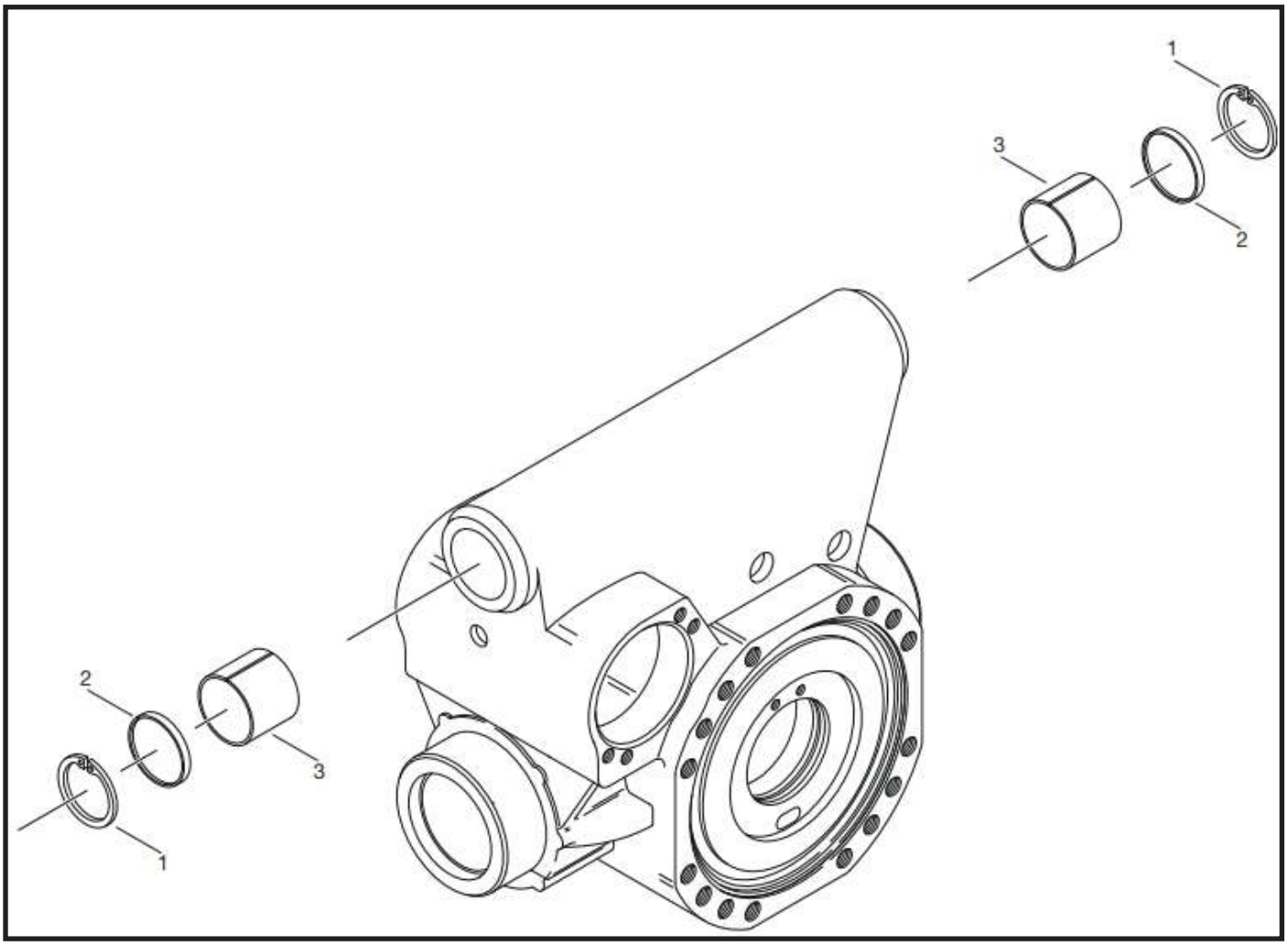

Disassembly

1. Remove the snap ring (**1**).

WARNING!

Removal of the snap rings can cause personal injuries. You must wear appropriate safety equipment. To avoid injury to eyes, wear eye protection equipment.

2. Remove the seal ring (2).

CAUTION

Take care not to damage the seal ring seating.

3. Using an extractor, remove the bushing (**3**) from the swinging support.

4. Repeat on both sides.

Assembly

1. Install the bushing (**3**) in the swinging support.

2. Press the sealing ring (**2**) into its seat.

3. Install the snap ring (**1**).

WARNING!

Personal injury can result when installing snap ring. The appropriate safety equipment must be worn. To avoid injury to your eyes, wear protective glasses during this procedure.

4. Repeat on both sides.

CHECKING WEAR AND REPLACING THE BRAKING DISCS

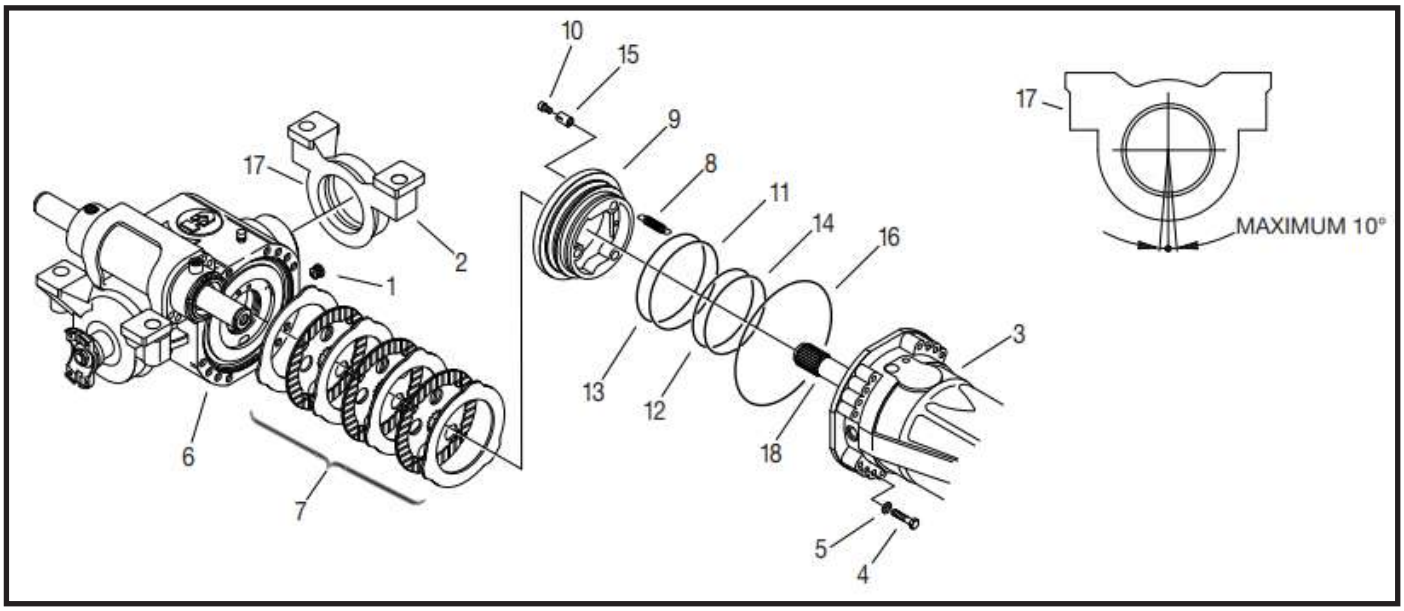

Disassembly

CAUTION

Before draining oil, release the internal pressure.

Before draining oil, release the internal pressure.

CAUTION

Perform all operations on both arms.

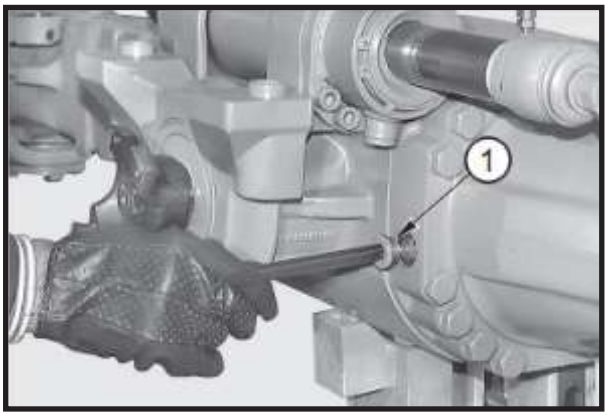

FIGURE 1: Remove the oil-level plug (**1**).

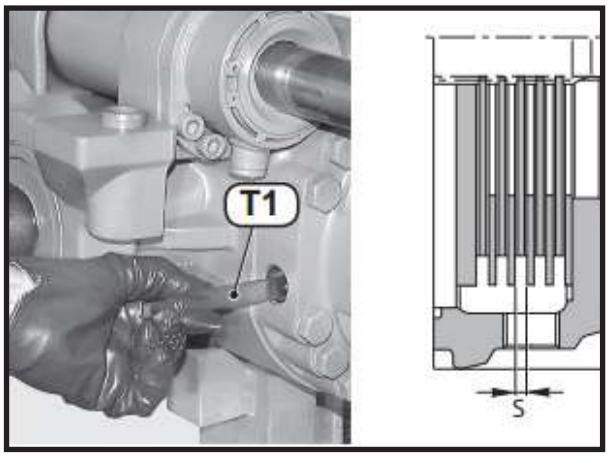

FIGURE 2: Apply the brakes and, k eeping them under pressure, check the lining.

CAUTION

Perform all operations on both arms.

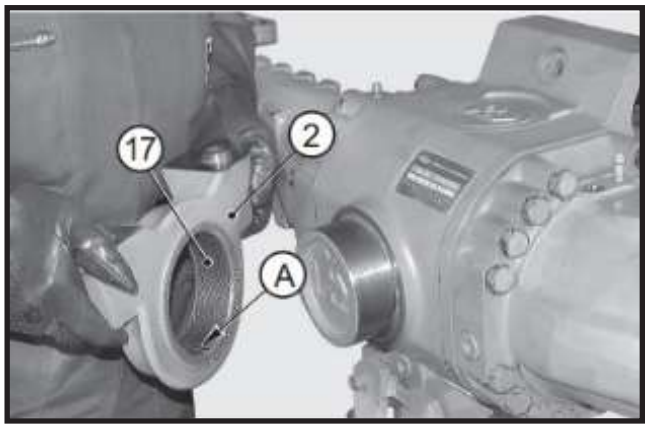

FIGURE 3: Remove the swinging support (**2**) on the side opposite the drive.

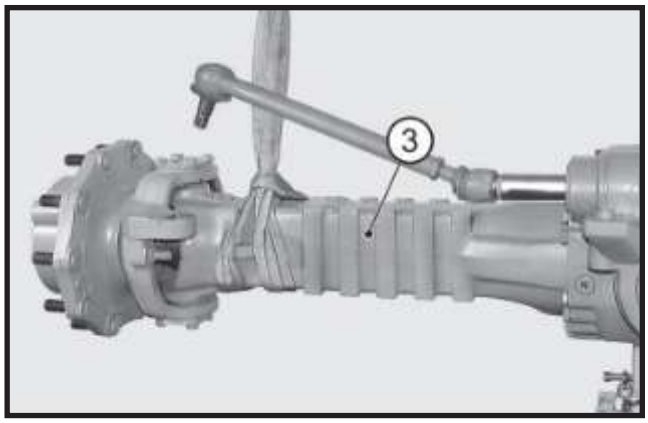

FIGURE 4: Disconnect the pins of the tie rods from the steering knuckle. Sling the arm (**3**) to be removed and put the rod under slight tension.

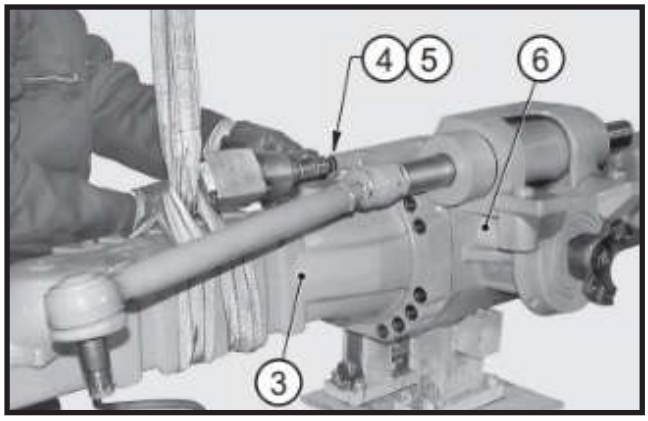

FIGURE 5: Loosen and remove the screws (**4**) and the washers (**5**) that fix the arm (**3**) to the central housing.

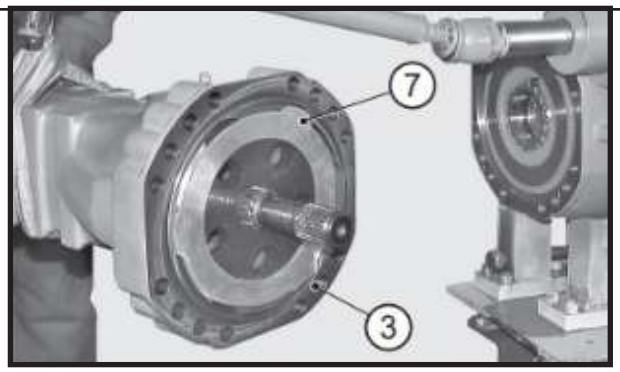

FIGURE 6: Remove the arm (**3**) together with the pack of the braking disks (**7**). Place the arm on a bench.

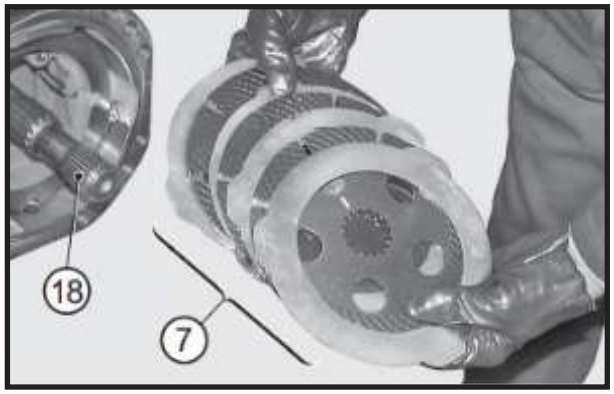

FIGURE 7: Remove the braking disks (**7**) and write down their order of assembly.

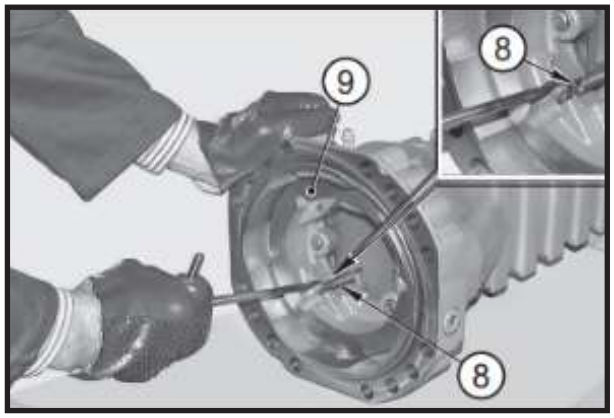

FIGURE 8: Remove the reversal springs (**8**) from the piston (**9**).

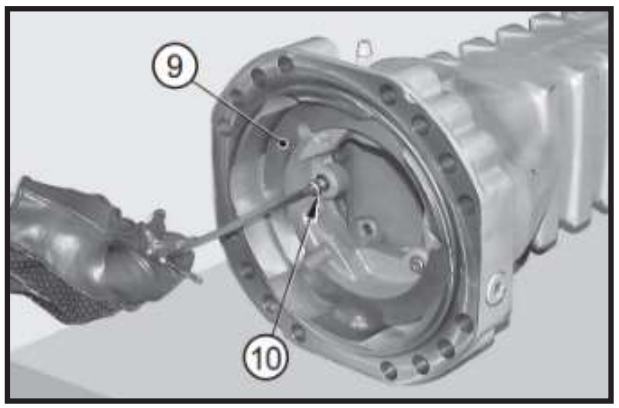

FIGURE 8: Remove the reversal springs (**8**) from the piston (**9**).

CAUTION

If the screws are to be replaced, write down the different colors for the different brake gap.

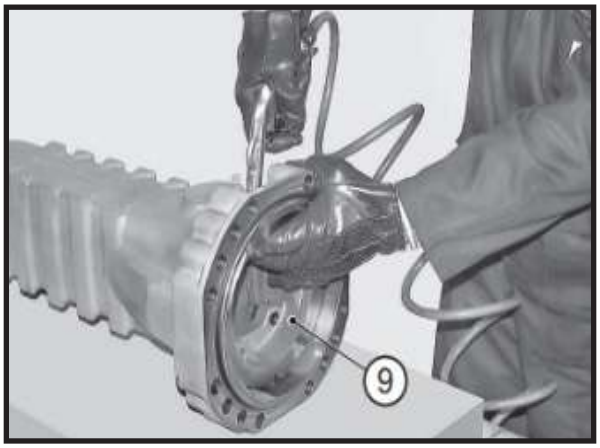

FIGURE 10: Slowly introduce compressed air through the connection of the braking circuit in order to extract the entire piston.

CAUTION

Hold on to the piston as it may be suddenly ejected and damaged.

Assembly

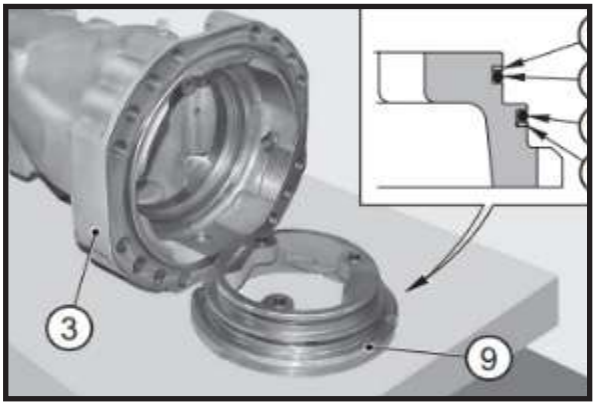

FIGURE 11: Accurately clean the piston (**9**) and the seats of slide and seal.

Replace the o-rings (**11, 12**) and the anti-extrusion rings (**13**, **14**); make sure that the assembly side is correct.

CAUTION

Hold on to the piston as it may be suddenly ejected and damaged.

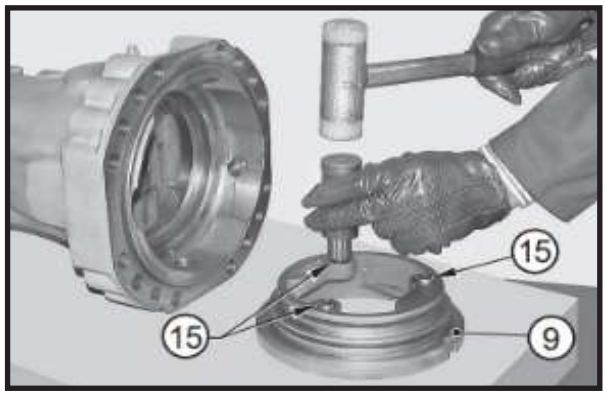

FIGURE 12: Insert the stroke automatic regulation springs (**15**); place them in line with the piston (**9**).

FIGURE 13: Lubricate the seals (**11**, **12**) and fit the piston (**9**) into the arm (**3**).

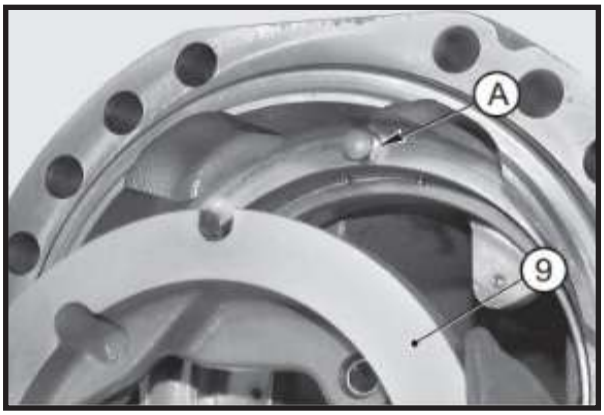

FIGURE 13: Lubricate the seals (**11**, **12**) and fit the piston (**9**) into the arm (**3**).

CAUTION

Make sure that the piston seat fits into the stop pin (A) inside the arm.

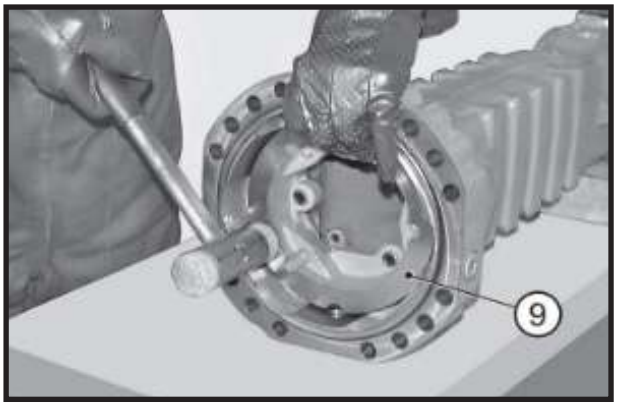

FIGURE 14: Assist the insertion of the piston (**9**) by lightly hammering around the edge with a plastic hammer.

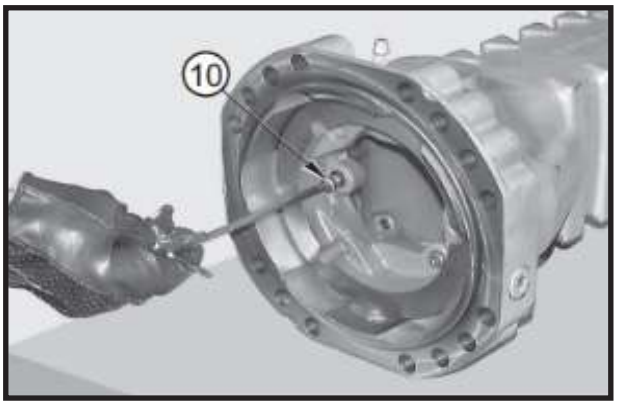

FIGURE 15: Fit the pin screws (**10**) making sure that they are all of the same color.

Apply Loctite 270 to the thread. Torque wrench setting: 4-5 ft-lb (5 - 7 N·m).

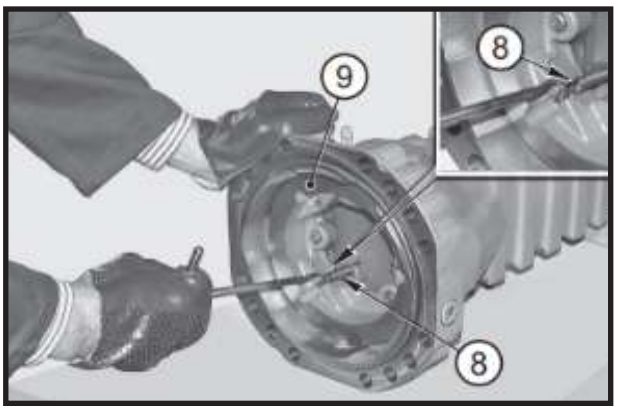

FIGURE 16: Fit the reversal springs (**8**) on the piston (**9**).

CAUTION

Pay attention not to deform the connections of the springs.

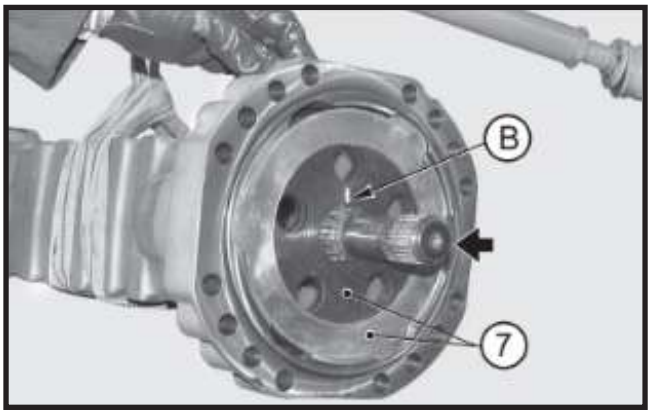

FIGURE 17: Slightly lubricate the braking disks (**7**) and fit them in the arm following the correct sequence; orient them so that the oil circulation holes and the marks “B” are perfectly lined up.

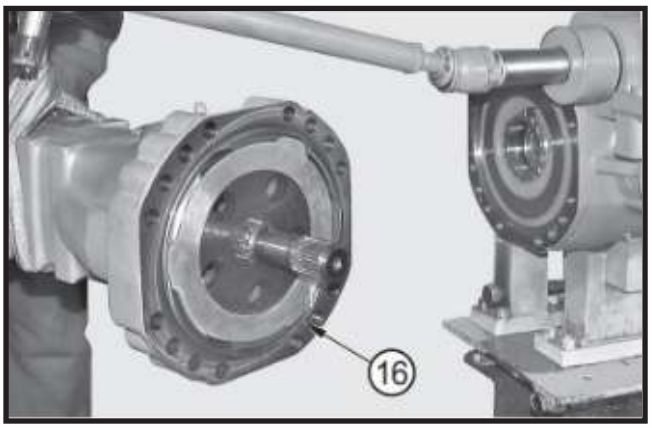

FIGURE 18: Check that the positioning of the sealing ring (**16**) on the arm is intact; install the complete arm. Lock it into position using two screws (**4**) and washers (**5**).

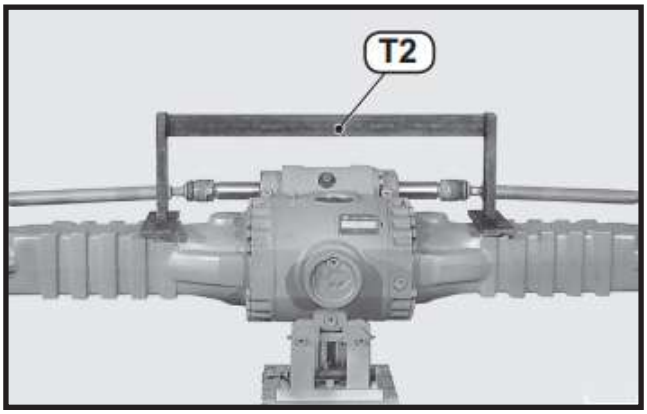

FIGURE 19: Check the flatness of the arms using tool T2 (See drawing T2) and finally lock the arms with the screws (**4**) and the washer (**5**) using the criss-cross method. Torque wrench setting: 220 ft-lb (298 N·m).

SPECIAL TOOLS

T1

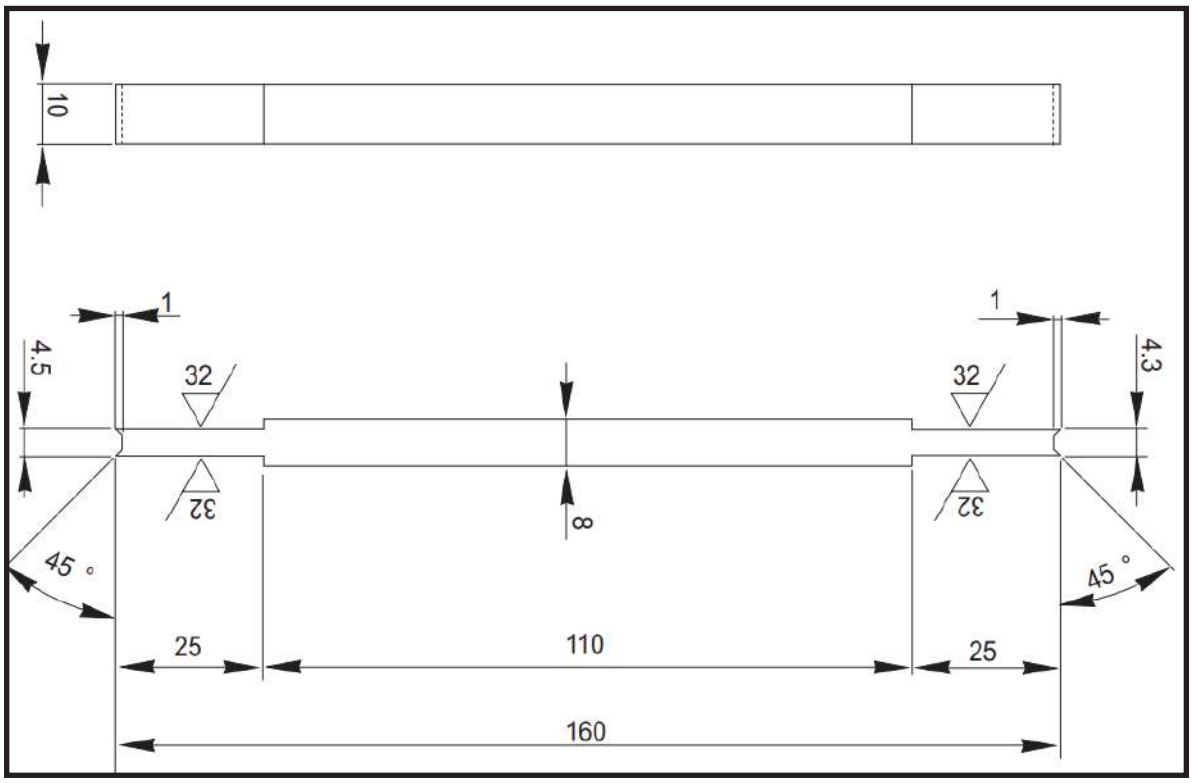

T2

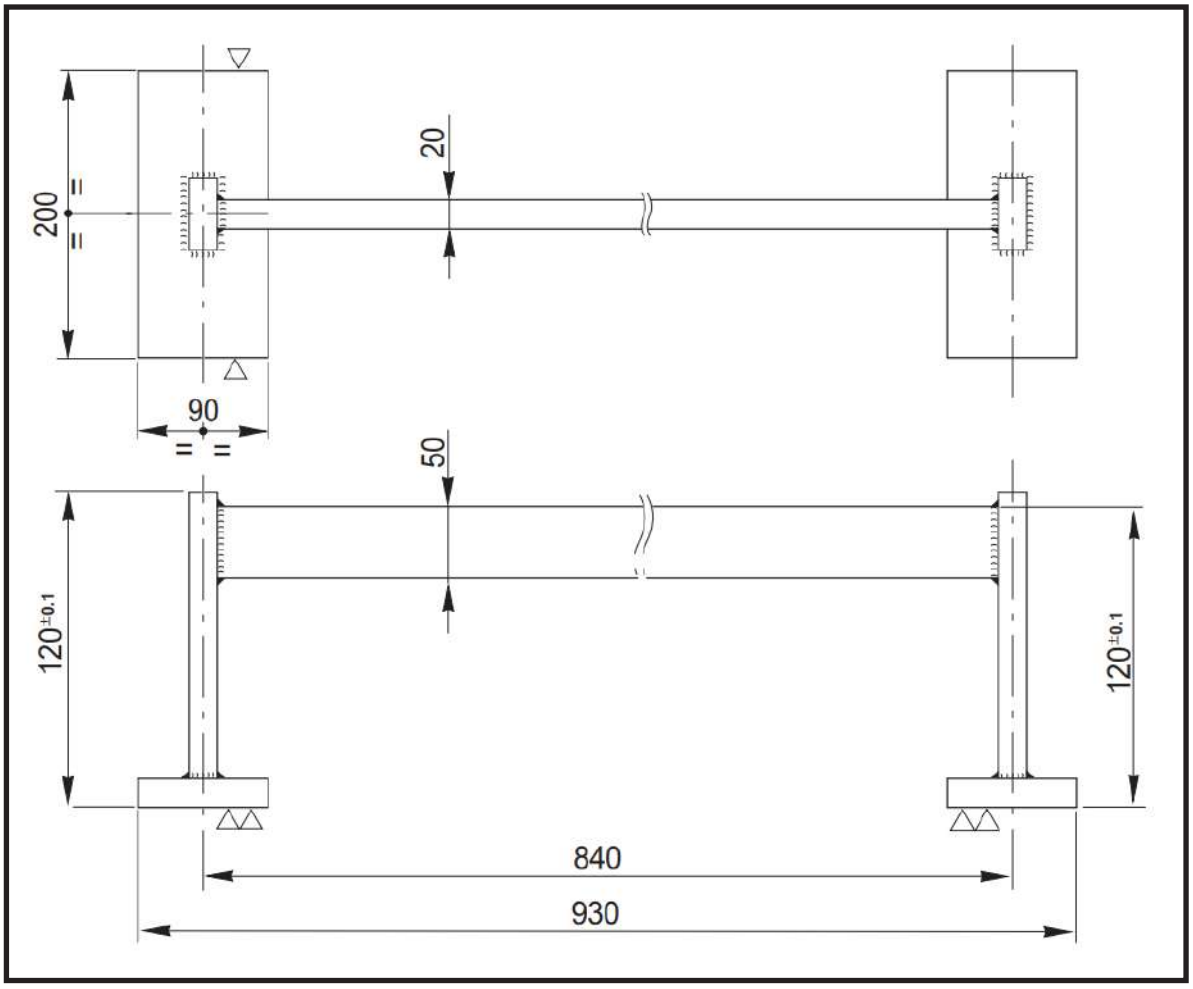

STEERING KNUCKLE ADJUSTMENT

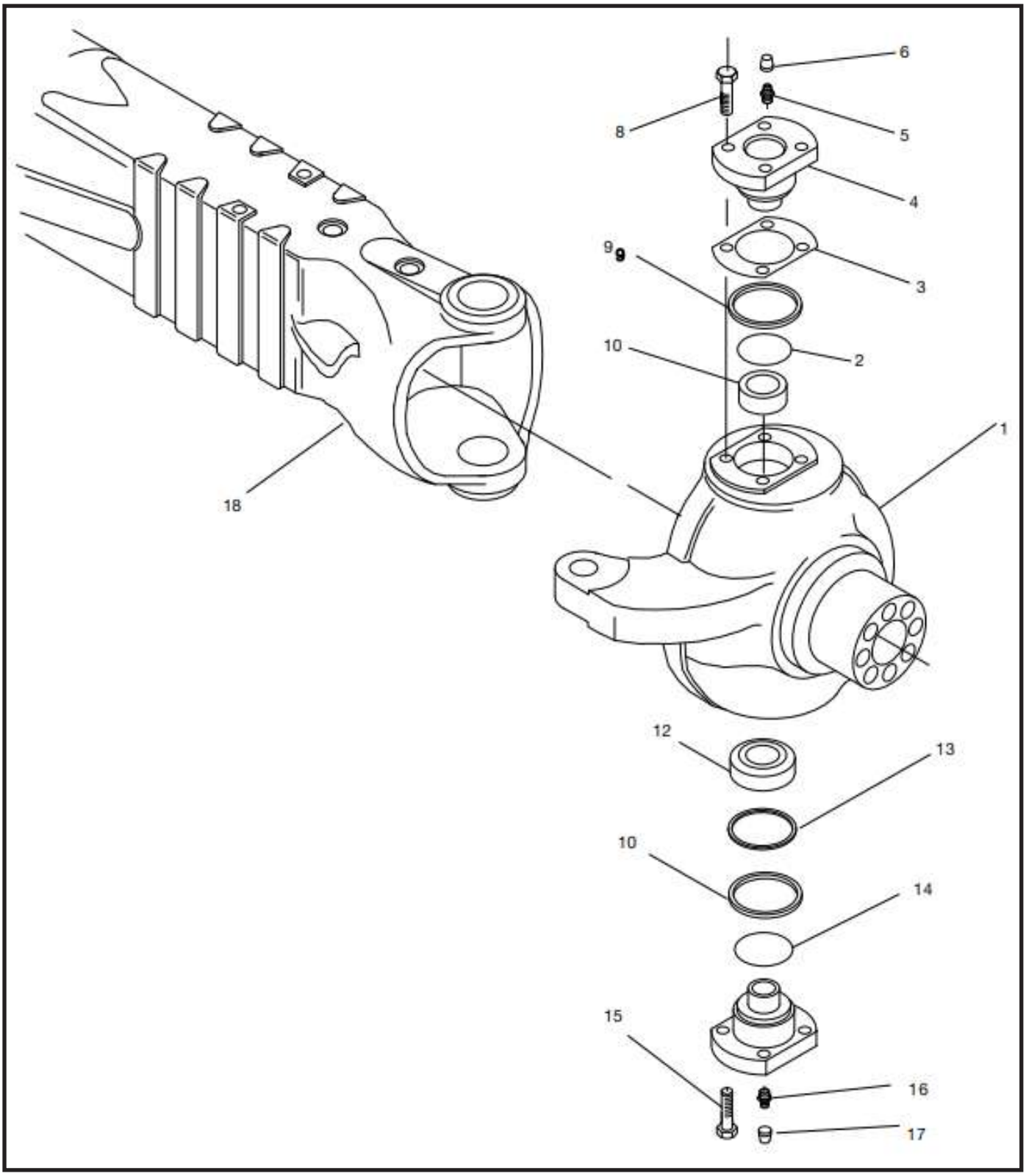

CAUTION

Before draining oil, release the internal pressure.

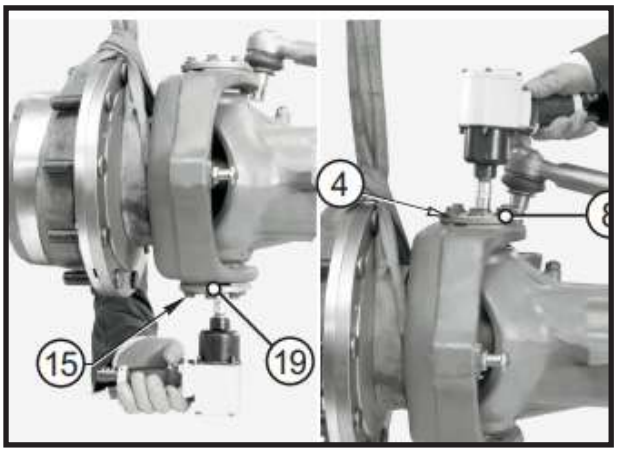

FIGURE 1: Loosen and remove the capscrews (**15, 8**) from the knuckle post (**19, 4**).

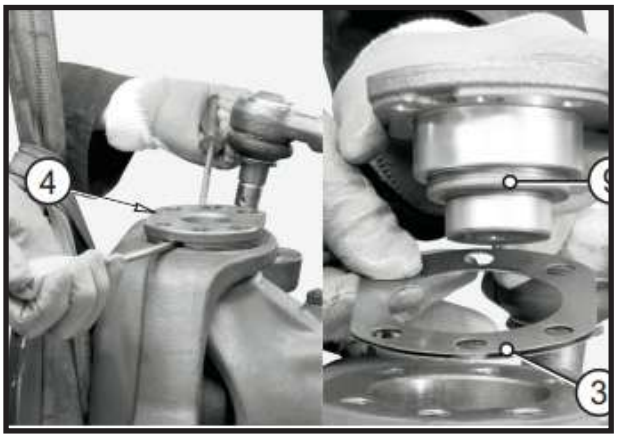

FIGURE 2: Using two levers, remove the top knuckle post (**4**) complete with front seal (**9**) and shims (**3**).

CAUTION

Pay attention not to damage the surfaces.

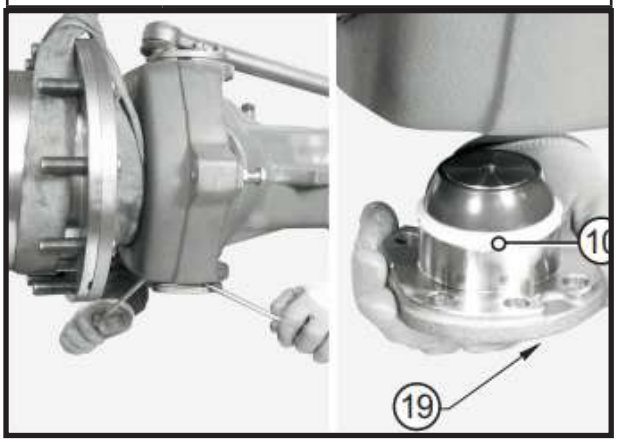

FIGURE 3: Remove the bottom articulation (**19**) pin complete with front sealing ring (**10**).

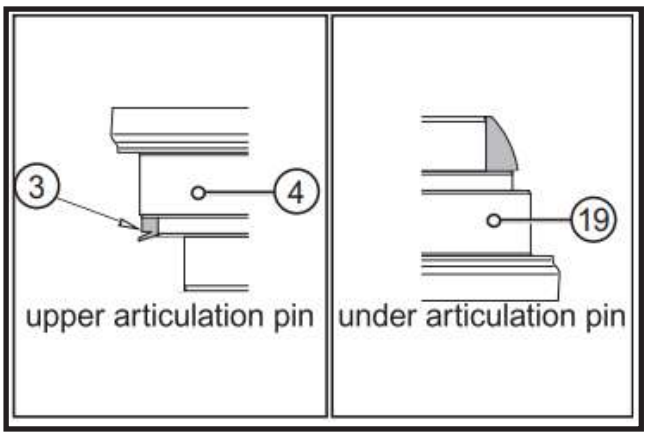

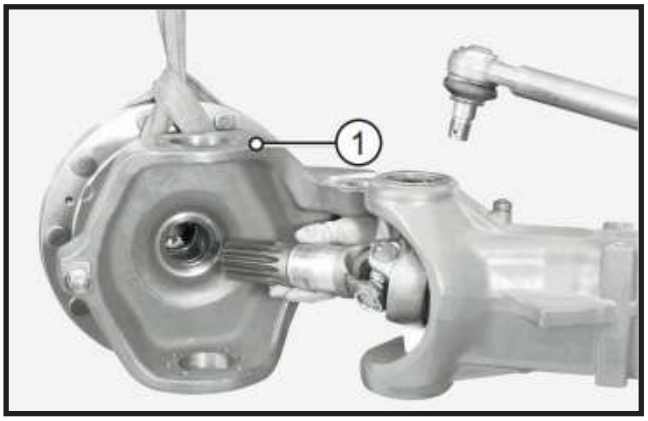

FIGURE 4: Remove the complete steering knuckle (1).

FIGURE 5: Lubricate the terminal of the u-joint and install the steering knuckle (**1**).

CAUTION

Pay due attention not to damage the dust cover rings and the sealing rings.

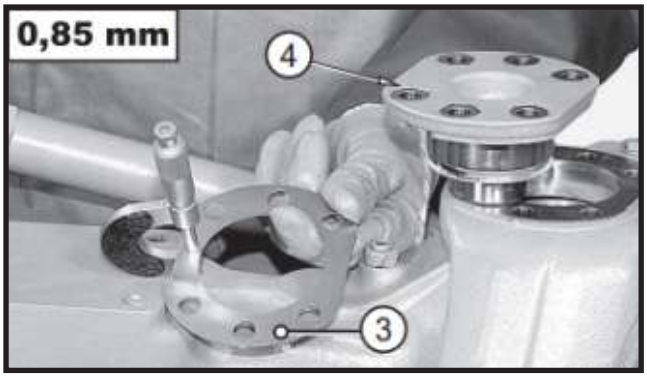

FIGURE 6: Prepare a series of shims (**3**) of 0,03 in (0,85 mm). To be assembled under the upper pin (**4**).

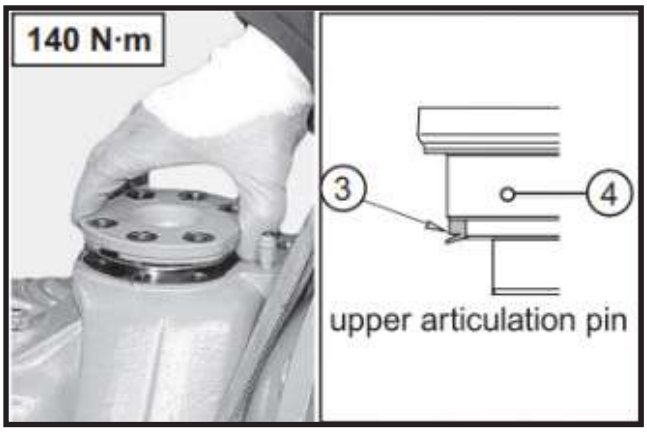

FIGURE 7: Fit a new seal (**3**) onto the top knuckle post (**4**). Lubricate and install the unit in the steering knuckle.

Position the screws (**8**) and tighten with torque wrench 103 ft-lb (140 N·m). Check the correct assembly side of the seal (**3**).

FIGURE 8: Lubricate steering knuckle.

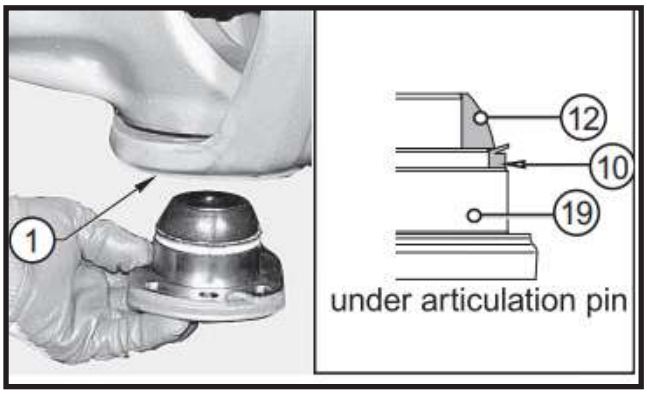

FIGURE 9: Fit the unit (**19**) in the steering knuckle (**1**). Position the screws (**15**) and tighten.

Check for the correct assembly side of the seal (**10**).

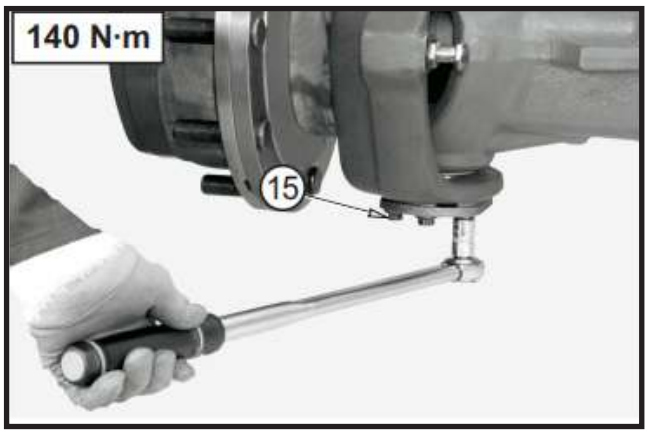

FIGURE 10: Tighten the new capscrews (**15**) of top and bottom knuckle posts in sequence using the criss-cross method.

Torque wrench setting: 103 ft-lb (140 N·m).

FIGURE 11: Check with a lever that there is no vertical gap. In case there is any gap, determine the width and reduce it by removing shims.

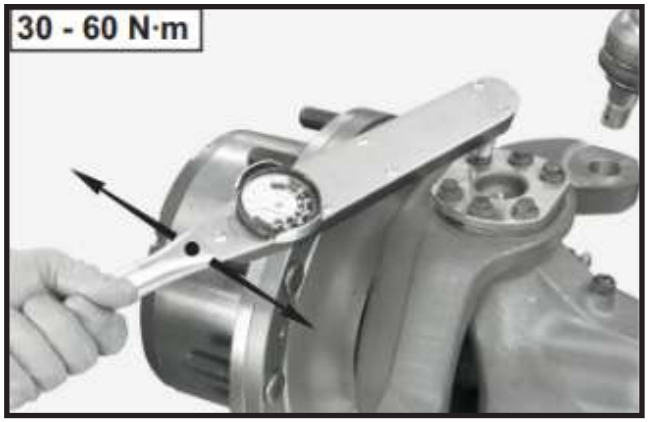

FIGURE 12: Check the torque of the pins, which has to be between 22-44 ft-lb (30-60 N·m). If the preliminary measured value is too high, the shims have to be increased.

(HEAVY DUTY) STEERING KNUCKLE ADJUSTMENT

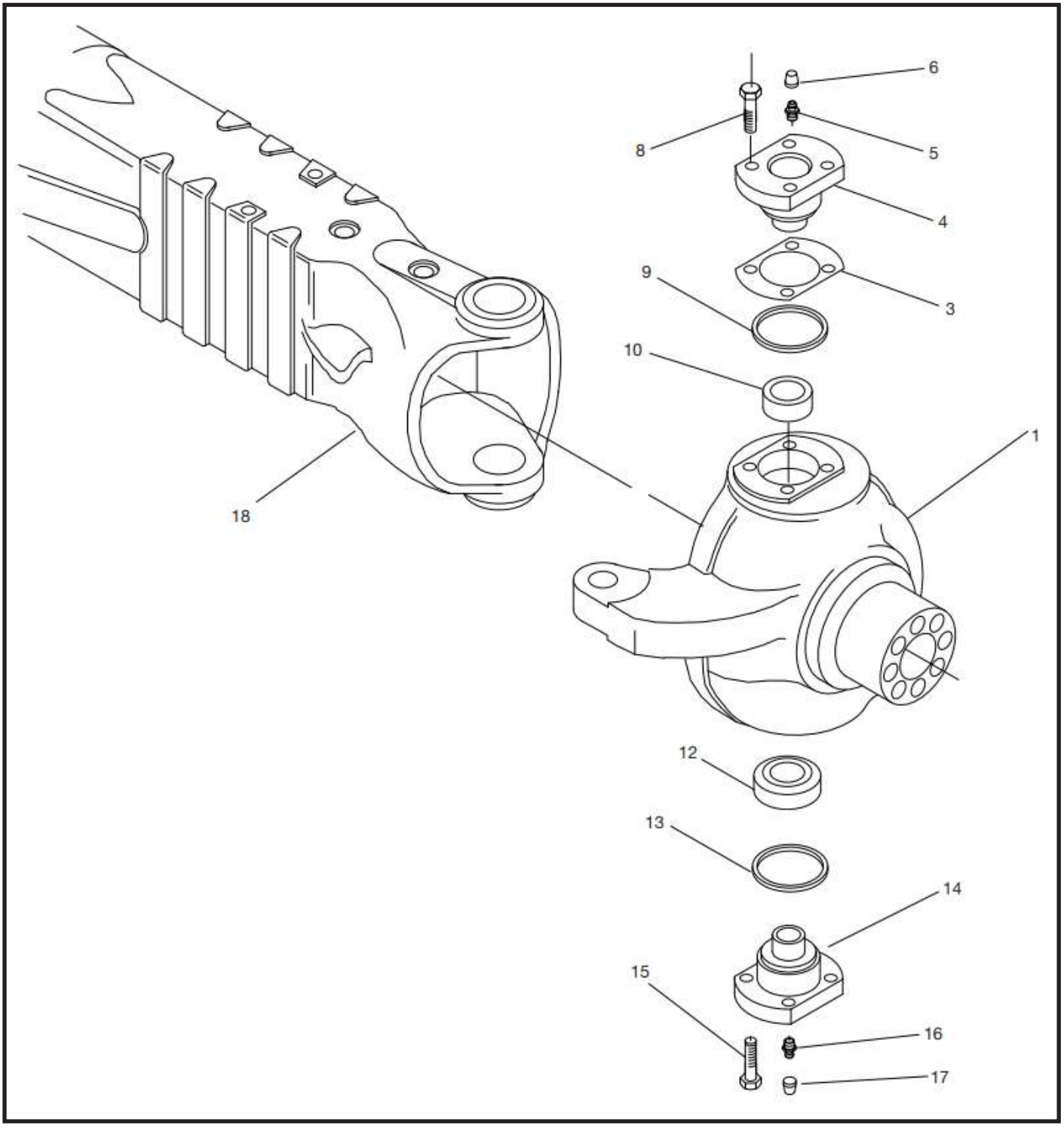

Disassembly

CAUTION

Before draining oil, release the internal pressure.

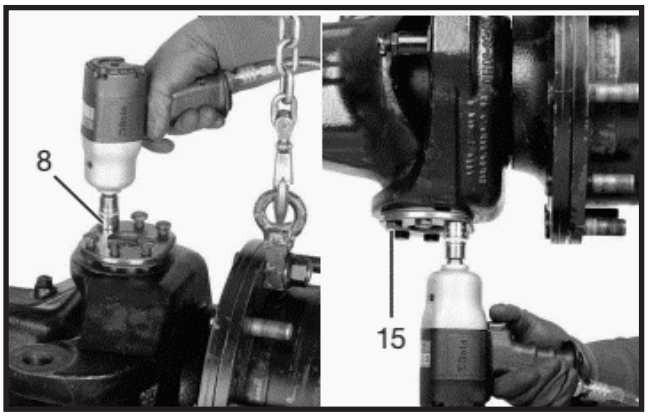

FIGURE 1: Loosen and remove the capscrews (**8, 15**) from the knuckle post (**4, 14**).

FIGURE 2: Remove the upper knuckle post (**4**) complete with front seal ring (**9**) and shims (**3**).

FIGURE 3: Remove the bottom knuckle post (**14**).

FIGURE 4: Remove the sealing ring (**9, 13**) from the knuckle post (**4, 14**).

FIGURE 5: If the ball bushing (**12**) needs replacing, remove it from the bottom knuckle post (**14**) using a separator.

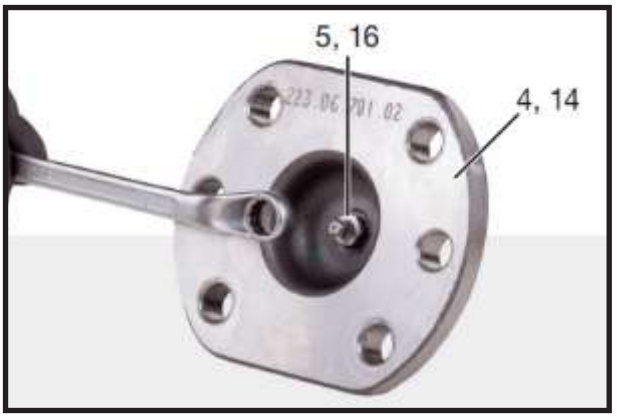

FIGURE 6: ONLY IF NECESSARY Remove caps (**6, 17**) and the grease zerks (**5, 16**).

FIGURE 7: Remove the complete steering knuckle (**14**).

FIGURE 8: Using an extractor for inner parts, remove the top and bottom thrust blocks (**10, 12**).

Assembly

FIGURE 9: Lubricate the top and bottom thrust blocks (**10, 12**) and fit them into the fulcrum holes of the arm.

FIGURE 10: Tighten fully into the hole provided two double joint lifting eyes size M16, connect to suitable lifting gear and tighten. Pay attention not to damage the dust cover rings and the sealing rings.

Install the steering knuckle (**14**).

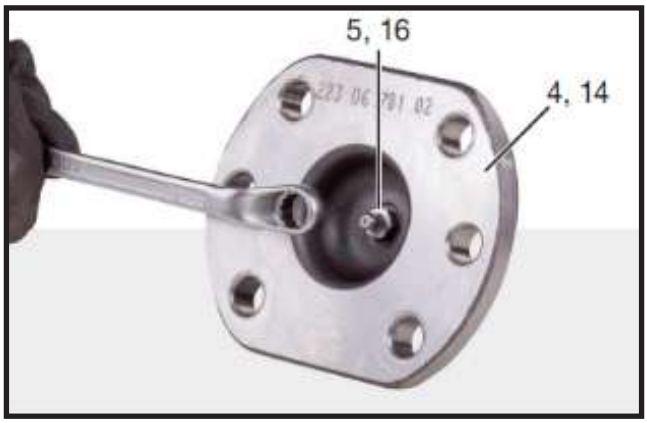

FIGURE 11: ONLY IF REMOVED Install the grease zerks (**5, 16**) and the caps (**6**, **17**).

FIGURE 12: Lubricate the surface of the sealing ring (**9, 13**) and assemble it into position.

Carefully check the rings (**9**, **13**) are properly oriented.

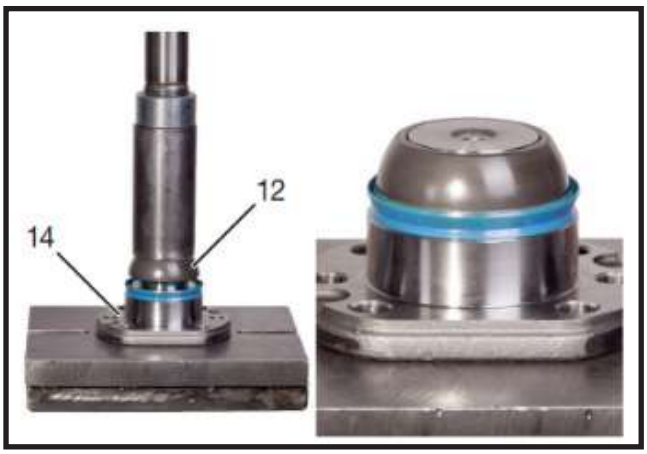

FIGURE 13: Install the bearing (**12**).

FIGURE 14: Grease generously the bearing (**12**) and the thrust block (**12**).

Lubricate with NLGI 3 EP grease the contact surfaces of the knuckle post and steering knuckle. Install the knuckle post (**14**).

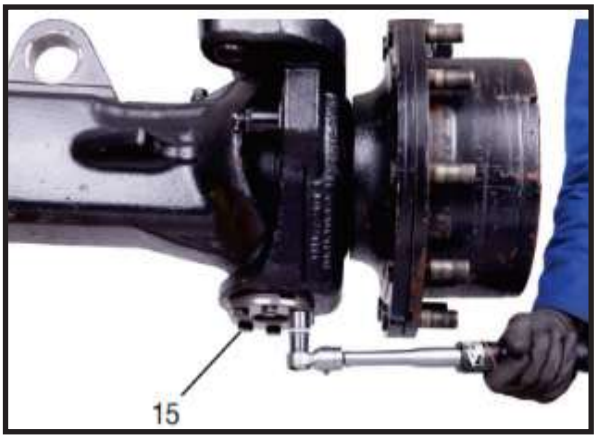

FIGURE 15: Tighten the new capscrews (**15**) of bottom knuckle posts in sequence using the criss-cross method. Torque wrench setting: 103 ft-lb (140 N·m).

FIGURE 16: Prepare a test shim pack (**3**) of 0,1 in (2,5 mm) to be assembled above the upper knuckle post (**4**).

EXAMPLE: Test shim pack = 0,1 in (2,5 mm)

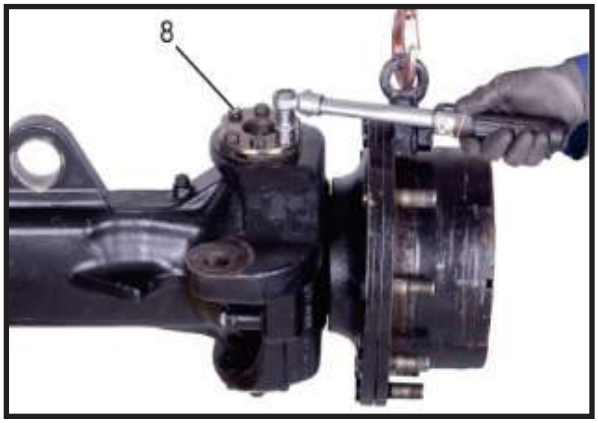

FIGURE 17: Tighten the new capscrews (**8**) of top knuckle post (**4**) in sequence using the criss-cross method.

Torque wrench setting: 103 ft-lb (140 N·m).

FIGURE 18: Position dial indicator, preset it to 0,04 in (1 mm) and reset it to zero.

FIGURE 19: Check the vertical gap using a lever.

EXAMPLE: Measured Backlash = 0,04 in (1 mm).

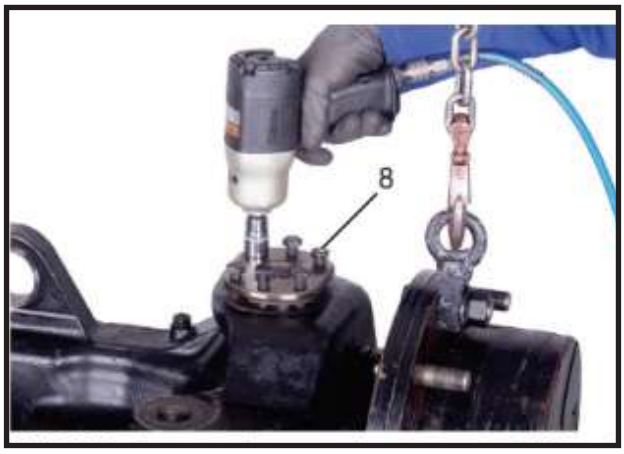

FIGURE 20: Loosen and remove the capscrews (**8**) from the knuckle post (**4**).

FIGURE 21: Calculate the difference between sizes “Test shim pack”, “Measured Backlash” and “Preload Draw” so as to obtain the size “S” of the shim (**3**) that will go under the knuckle post. Knuckle Post Preload Draw =0-0,004 in (0 - 0,1 mm) S = Test shim pack - Measured Backlash - Preload Draw = EXAMPLE

Test shim pack = 0,1 in (2,5 mm)

Measured Backlash = 0,04 in (1 mm) S = 0,1 in (2,5 mm)- 0,04 in (1 mm).

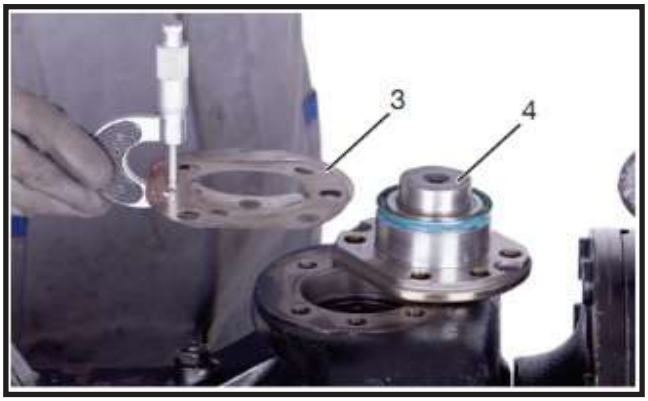

FIGURE 22: Grease generously the bearing (**10**) and install with previuosly calculated shims (**3**).

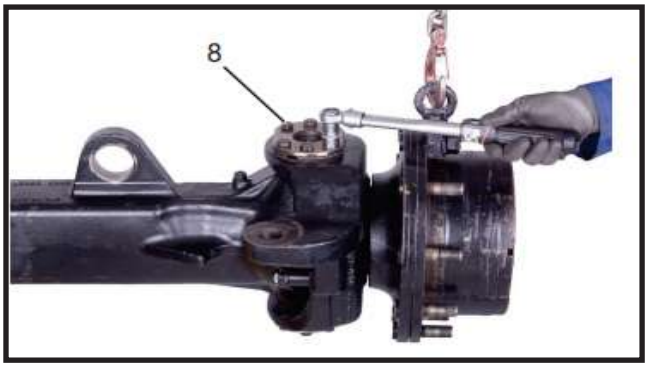

FIGURE 23: Tighten the new capscrews (**8**) of knuckle posts (**4**) in sequence using the criss-cross method. Torque wrench setting: 103 ft-lb (140 N·m).

DOUBLE U-JOINT

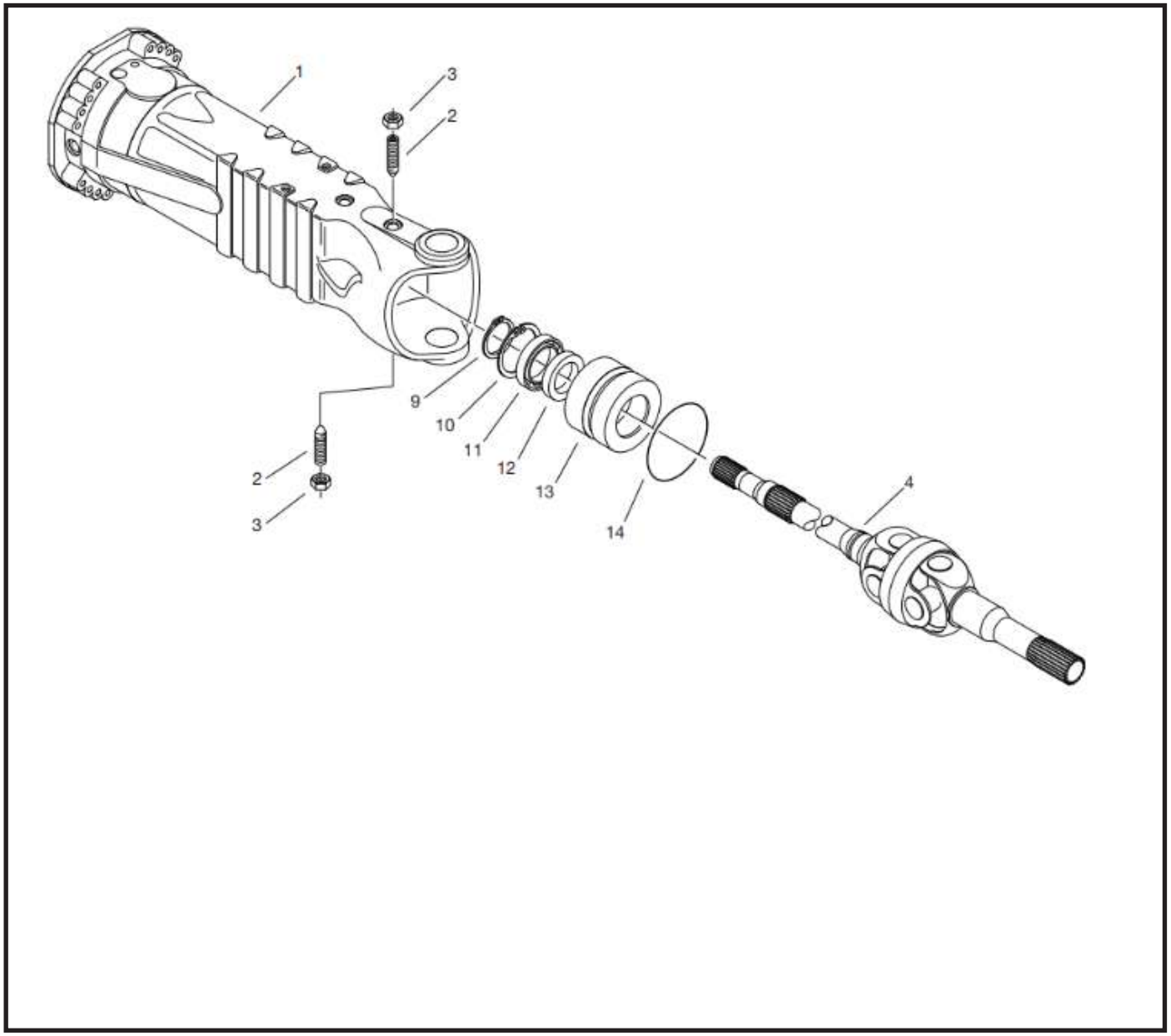

Disassembly

CAUTION

Before draining oil, release the internal pressure.

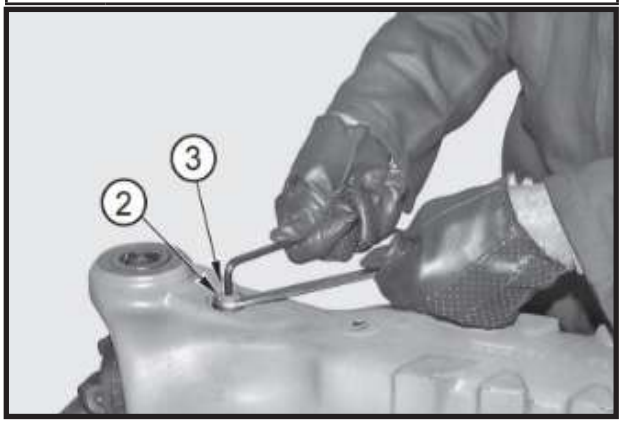

FIGURE 1: Loosen and remove the top and bottom check nuts (**2**) from the studs (**3**).

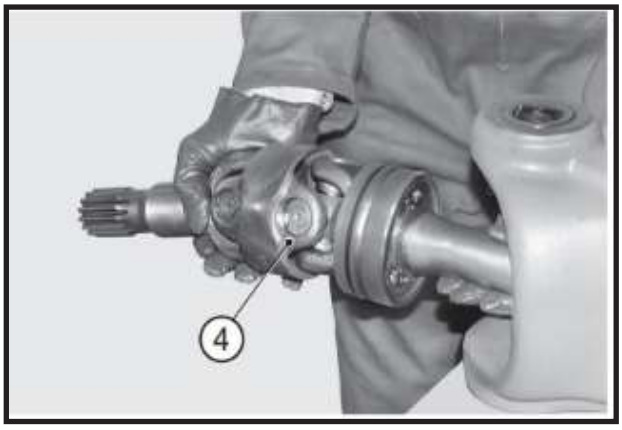

FIGURE 2: Remove the entire u-joint (**4**).

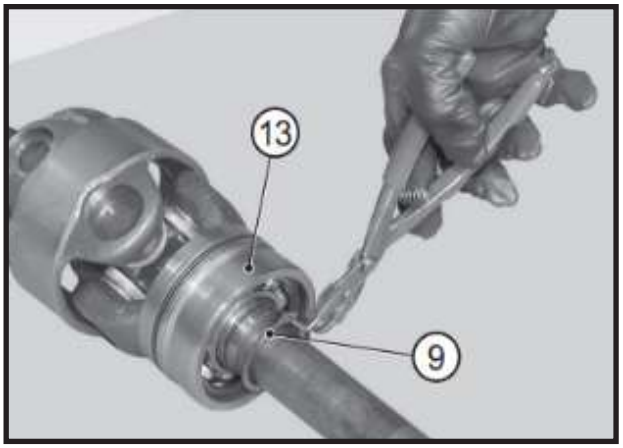

FIGURE 3: Remove the snap ring (**9**) from the bushing unit (**13**).

CAUTION

Before draining oil, release the internal pressure.

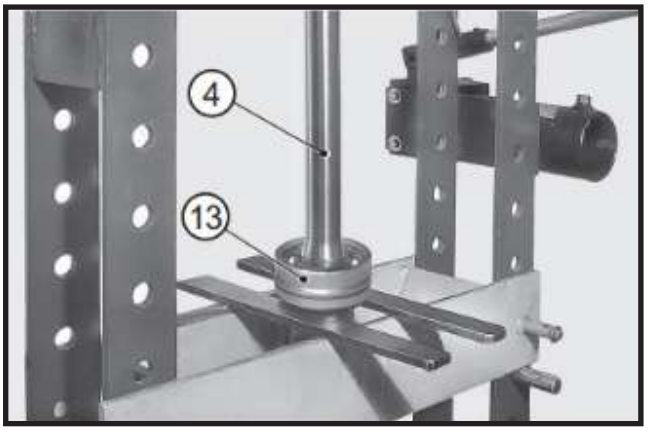

FIGURE 4: Position the entire u-joint (**4**) under a press and remove the complete bushing (**13**).

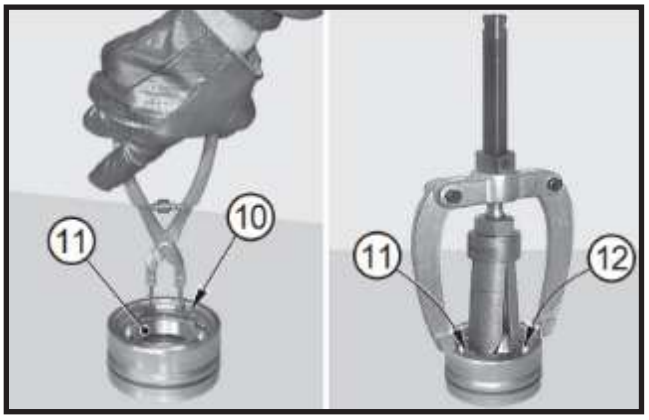

FIGURE 5: Remove the snap ring (**10**) from the bearing (**11**). Use a puller to remove the bearing (**11**), the sealing ring (**12**) and the o-ring (**14**).

CAUTION

Before draining oil, release the internal pressure.

Assembly

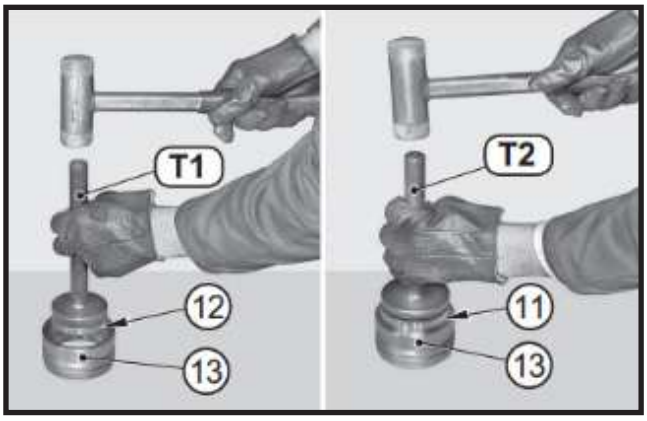

FIGURE 6: Insert the sealing ring (**12**) and the bearing (**11**) in the bushing (**13**).

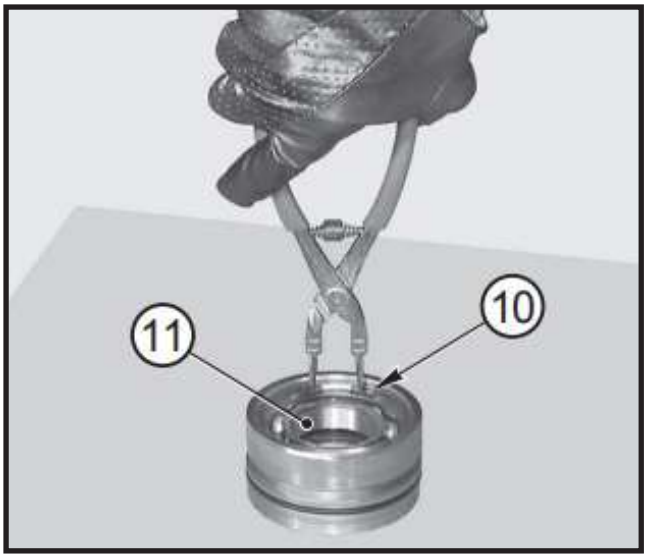

FIGURE 7: Fit the snap ring (**10**) on the bearing (**11**).

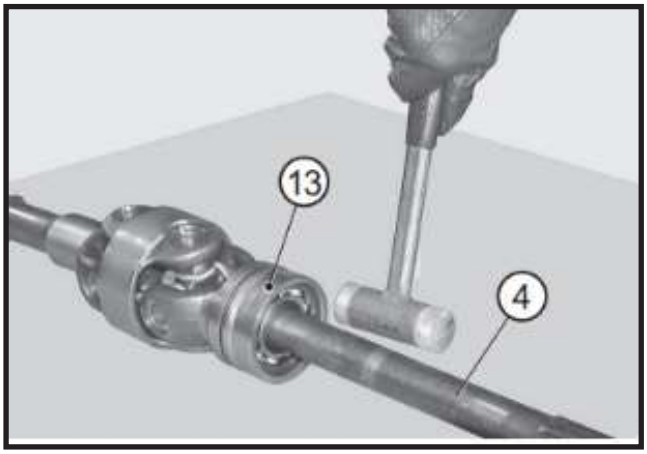

FIGURE 8: Heat the bearing in oil at an approximate temperature of 212 °F (100°C) and fit the entire bushing (**13**) on the u-joint (**4**).

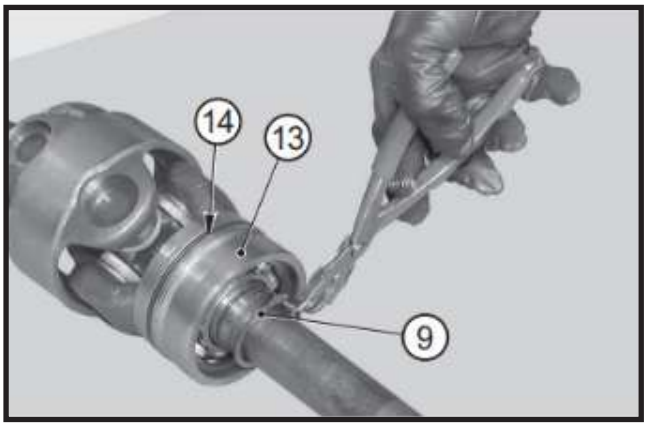

FIGURE 9: Fit the check ring (**9**) on the bushing unit (**13**); also put the o-ring (**14**) into position.

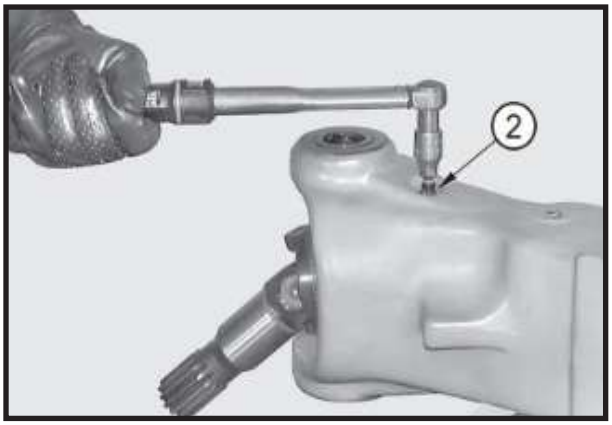

FIGURE 10: Insert the u-joint and tighten the top and bottom studs (**2**). Torque wrench setting: maximum 11 ft-lb (15 N·m).

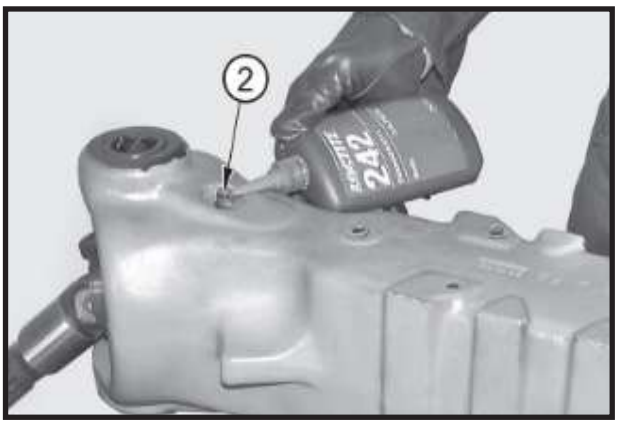

FIGURE 11: Apply Loctite 242 to the jutting parts of the studs (**2**).

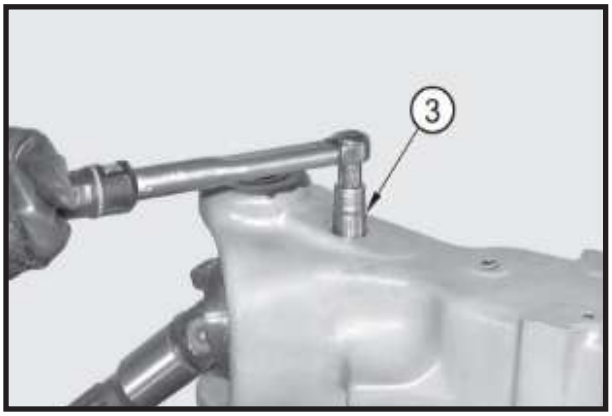

FIGURE 12: Install the nuts (**3**) on the studs (**2**) and tighten them using a torque wrench.

Torque wrench setting: 90 ft-lb (122 N·m).

SPECIAL TOOLS

T1

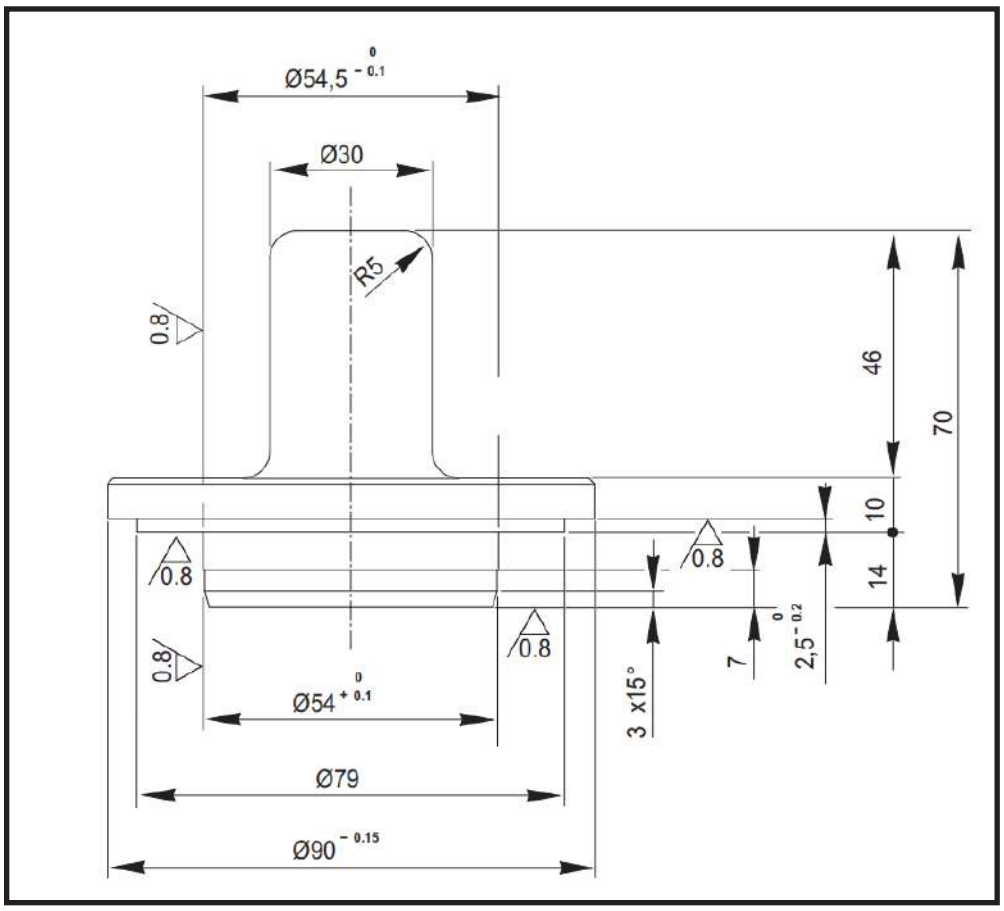

T2

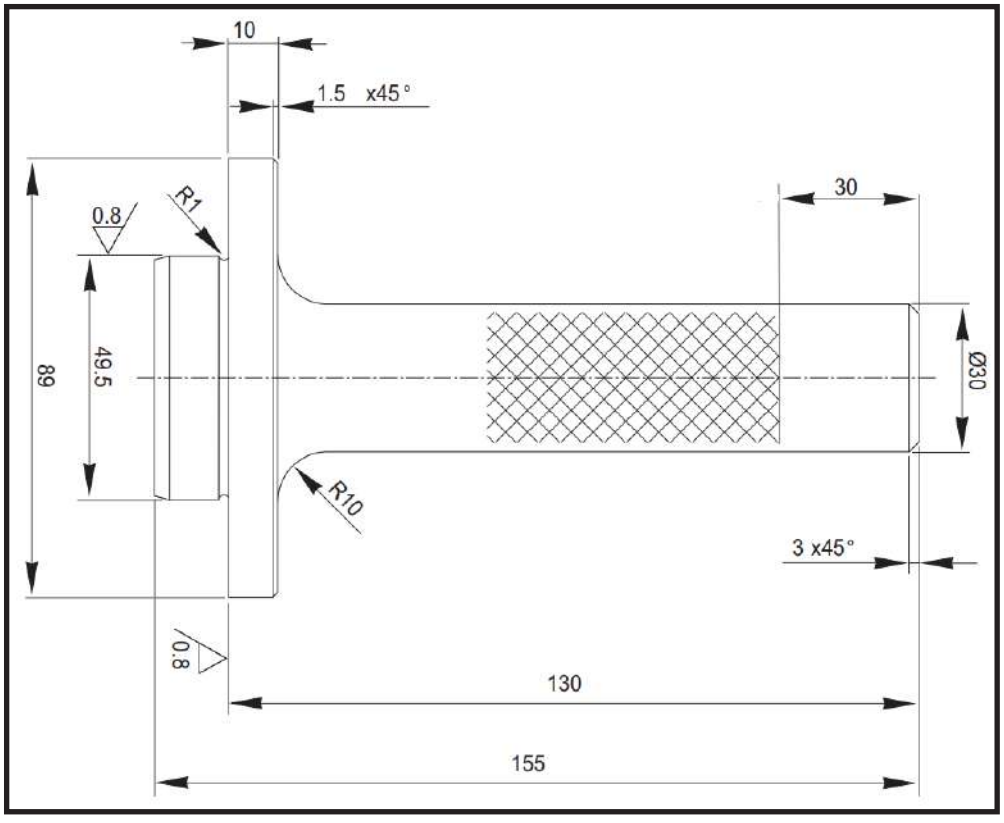

PLANETARY REDUCTION GEAR

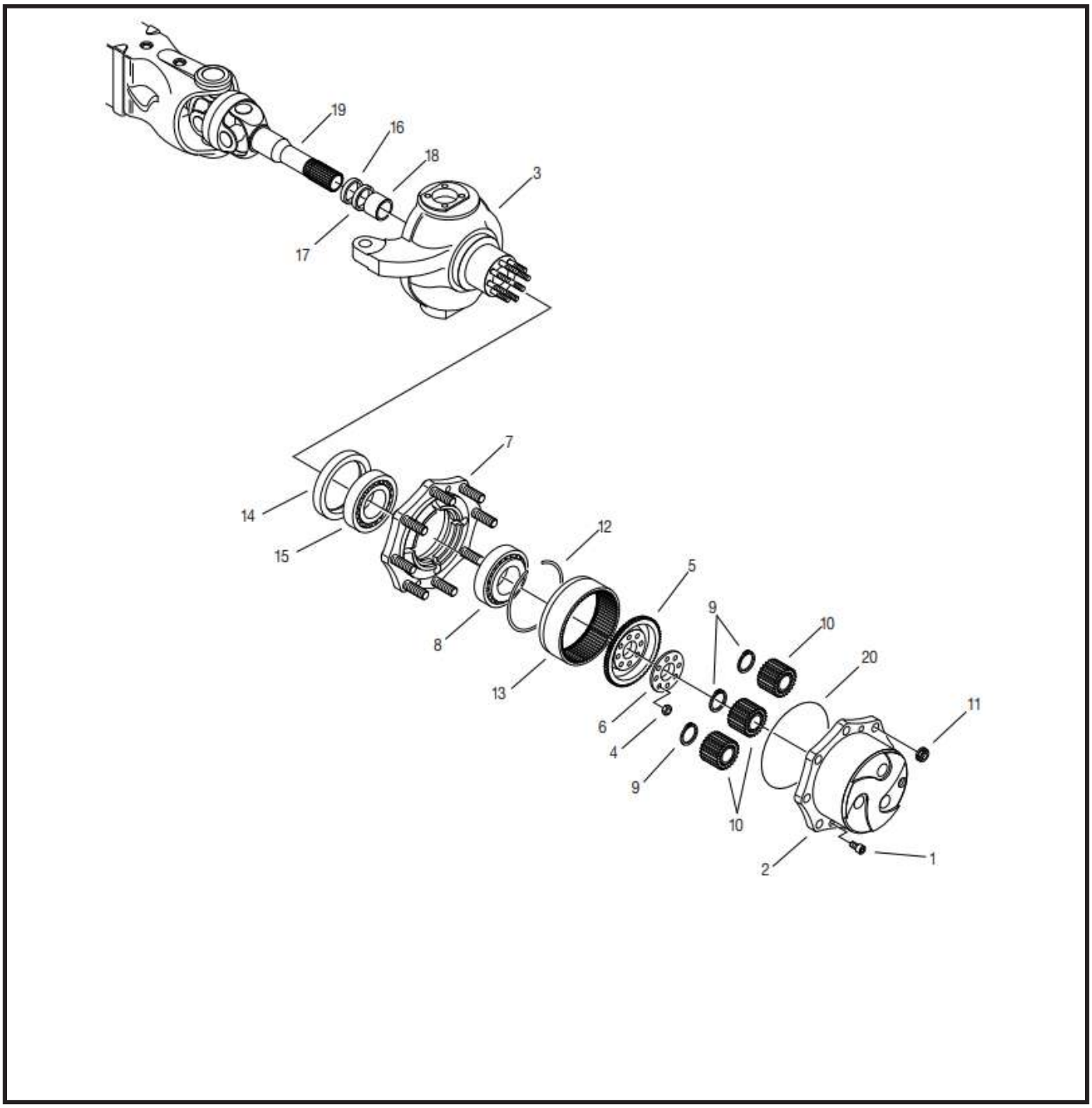

Disassembly

CAUTION

Before draining oil, release the internal pressure.

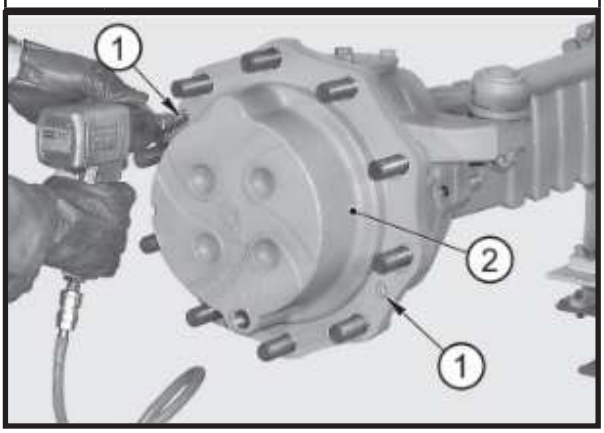

FIGURE 1: Disconnect the steering bars from the steering knuckle (**3**).

Remove the securing screws (**1**) from the planetary carrier cover (**2**).

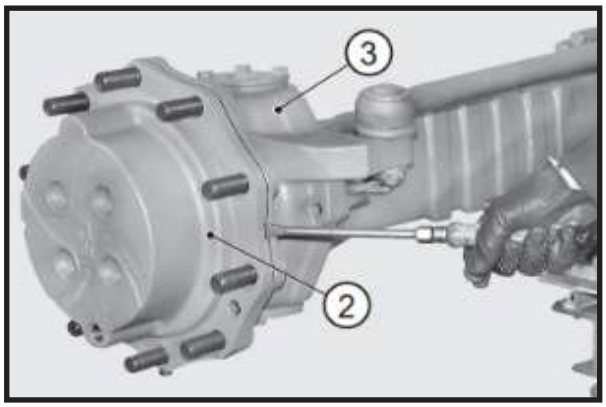

FIGURE 2: Disjoint the planetary carrier cover (**2**) from the steering knuckle (**3**) by alternatively forcing a screwdriver into the appropriate slots.

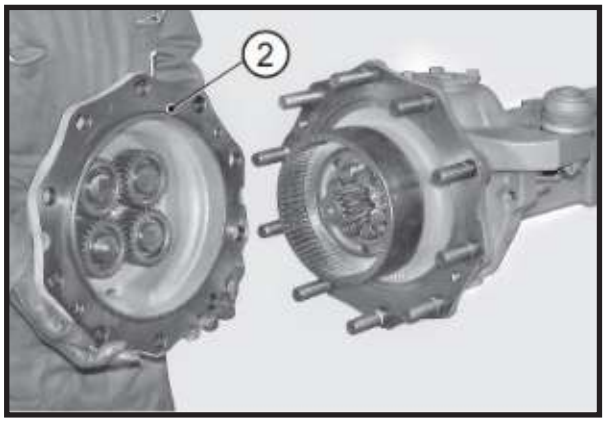

FIGURE 3: Remove the complete planetary carrier cover (**2**).

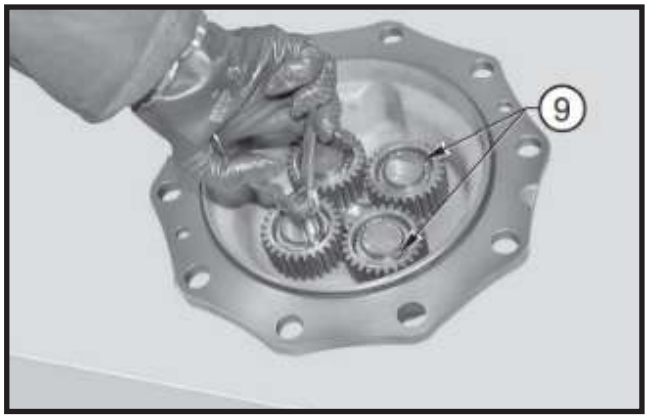

FIGURE 4: Remove the snap rings (**9**).

CAUTION

Set the pliers following the correct procedure shown in END-STOP PLIER SETTING.

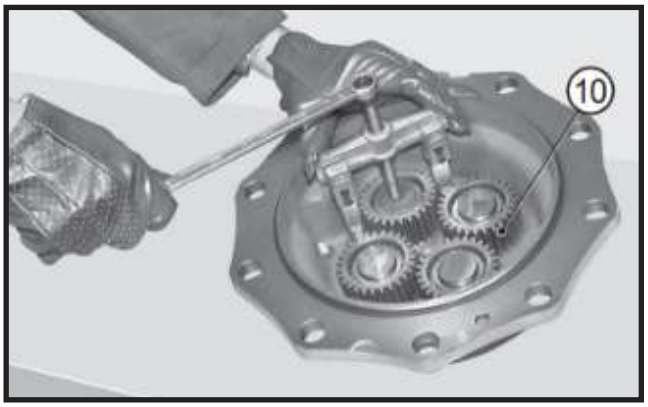

FIGURE 5: With the help of a puller, remove the planetary wheel gears (**10**).

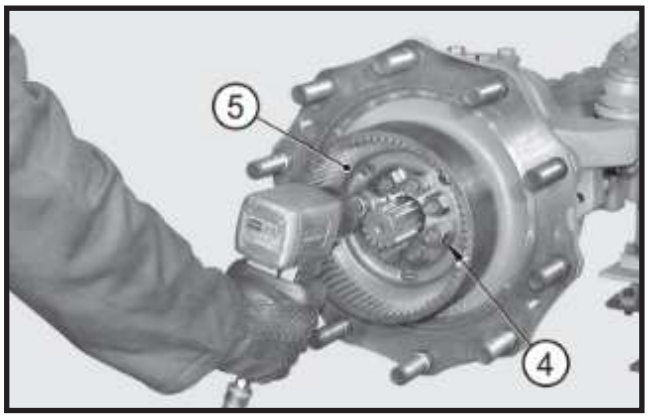

FIGURE 6: Loosen and remove the tightening nuts (**4**) from the crown flange (**5**).

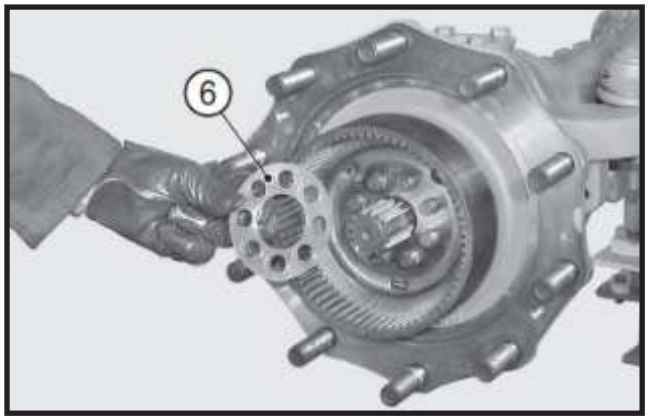

FIGURE 7: Remove the safety flange (**6**).

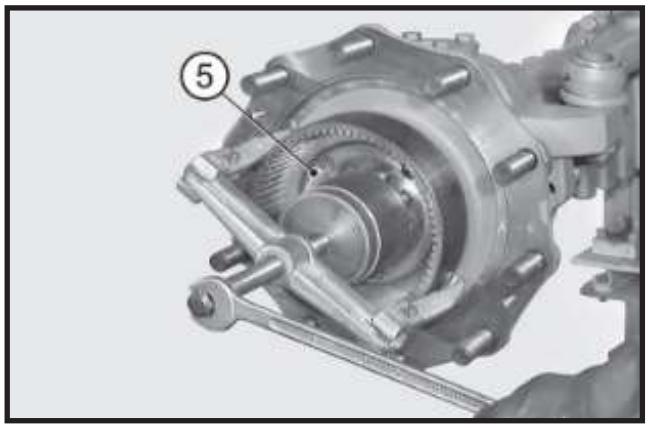

FIGURE 8: Using a puller, remove the complete crown flange (**5**) by acting on the stud bolts.

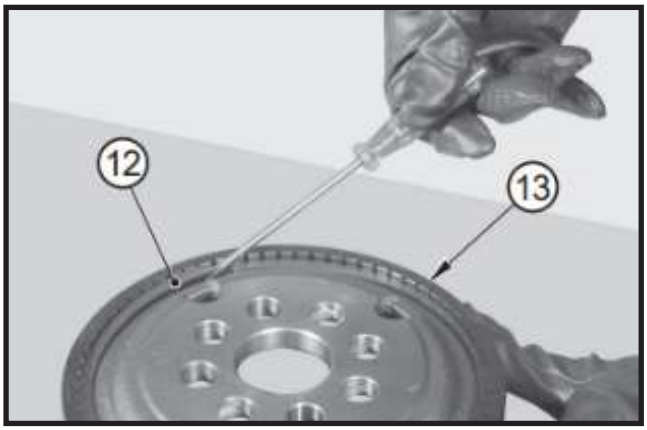

FIGURE 9: Remove the snap ring (**12**) from the crown (**13**).

FIGURE 10: Remove the crown flange (**5**).

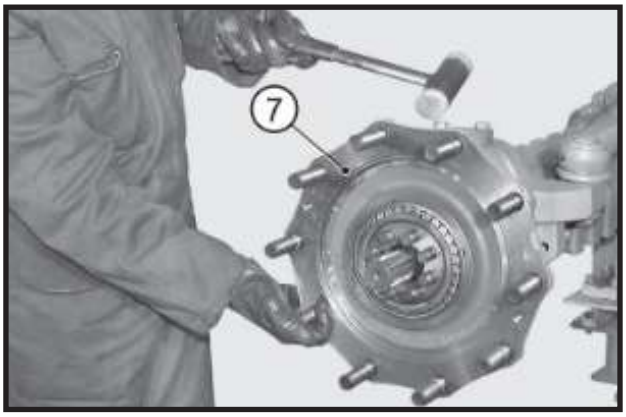

FIGURE 11: Partially extract the hub (**7**) using a plastic hammer.

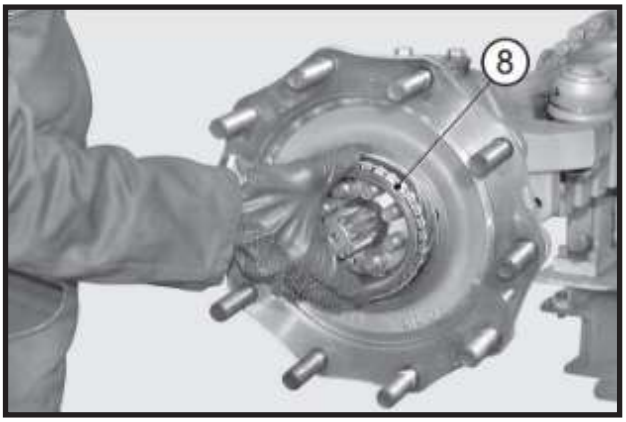

FIGURE 12: Remove the external bearing (**8**).

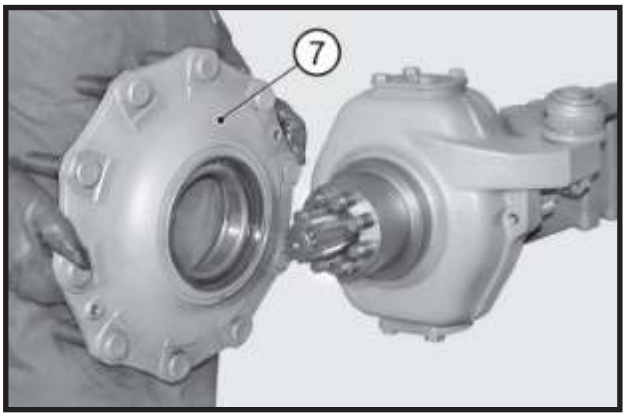

FIGURE 13: Remove the complete hub (**7**).

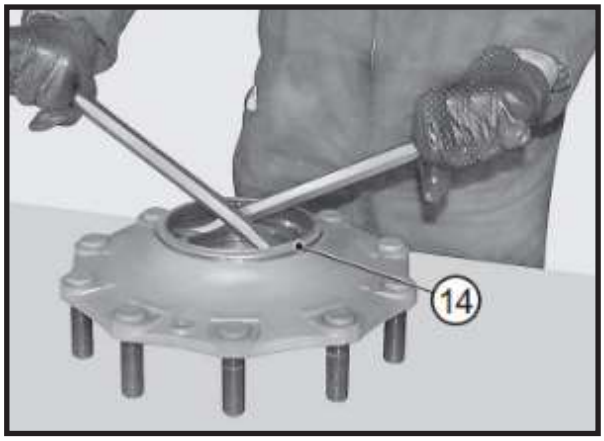

FIGURE 14: Remove the sealing ring from the hub (**14**).

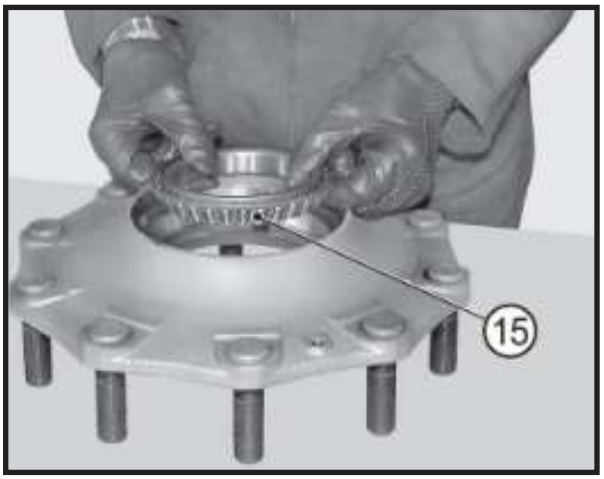

FIGURE 15: Remove the internal bearing (**15**).

FIGURE 16: Remove the external thrust blocks from the bearings (**8, 15**) force a pin-driver into the appropriate slots on the hub (**7**).

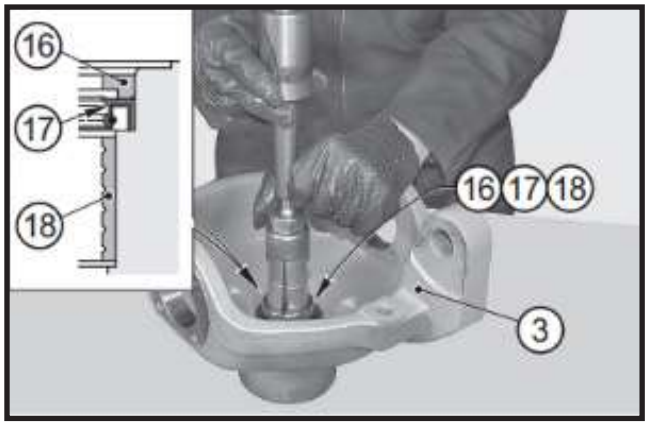

FIGURE 17: Use a puller to remove the centering ring (**16**), the sealing ring (**17**) and the bearing (**18**) from the steering knuckle (**3**).

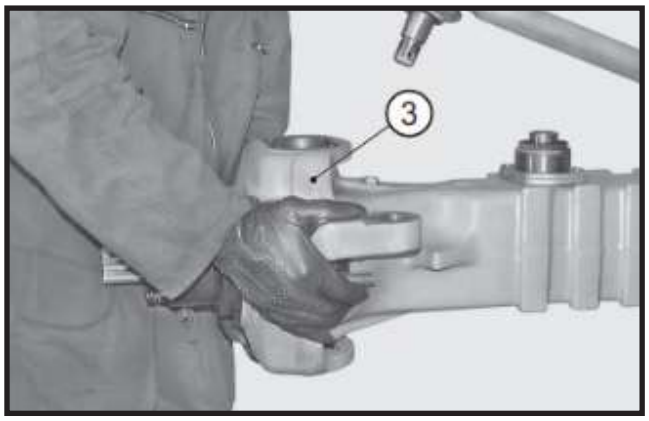

FIGURE 18: Remove the pins and remove the steering knuckle (**3**).

Assembly

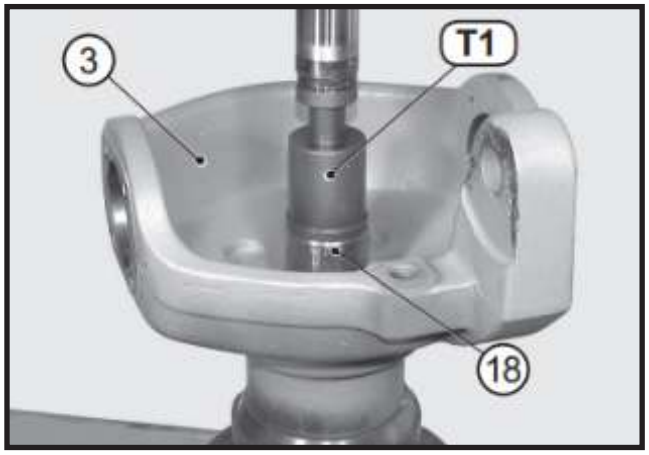

FIGURE 19: Lubricate the bushing (**18**) and the seat of the steering knuckle (**3**). Install the bushing (**18**), using tool T1 (See drawing T1)

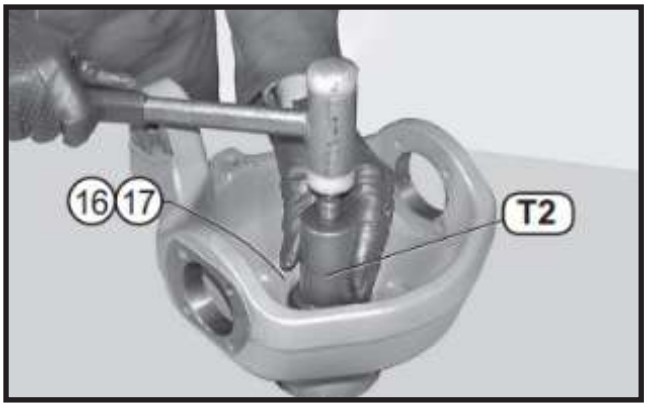

FIGURE 20: Lubricate the outer surface of the sealing ring (**17**) and centering ring (**16**), fit them into their seat using tool T2 (See drawing T2).

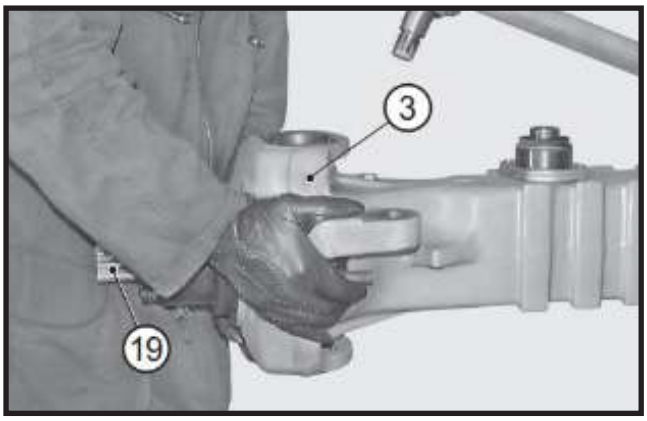

FIGURE 21: Fit the steering knuckle (**3**) onto the U-joint (**19**) and install the knuckle posts.

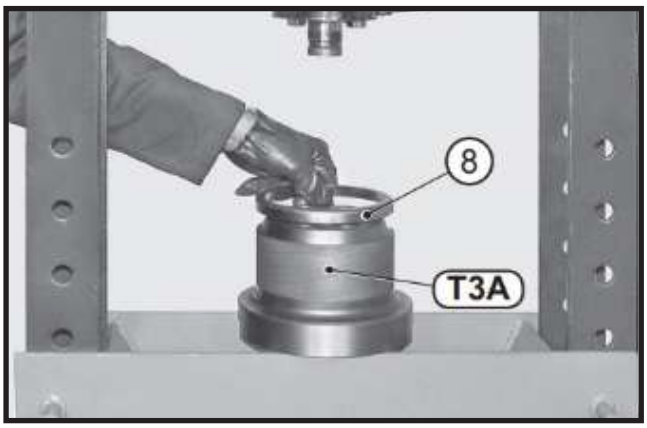

FIGURE 22: Position the lower part of tool T3A (See drawing T3) and the thrust block of the external bearing (**8**) under the press.

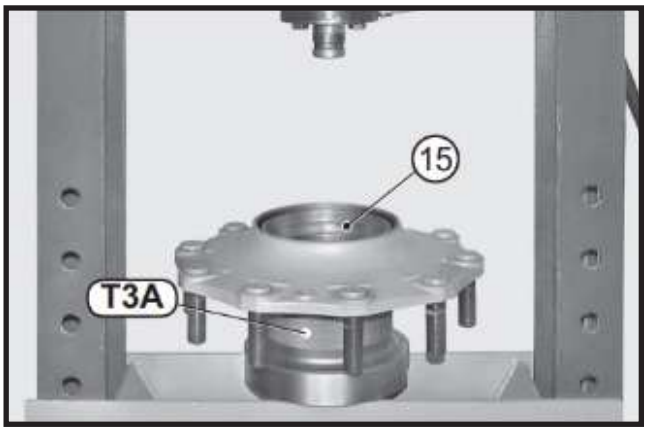

FIGURE 23: Lubricate the seats of the bearings and position the hub (**7**); position the thrust block of the internal bearing (**15**).

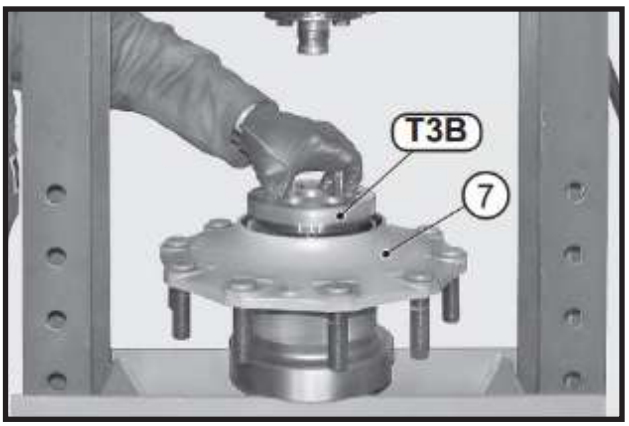

FIGURE 24: Position the upper part and press the thrust blocks into the hub (**7**) all the way down.

FIGURE 25: Fit the bearing (**15**) into the internal thrust block.

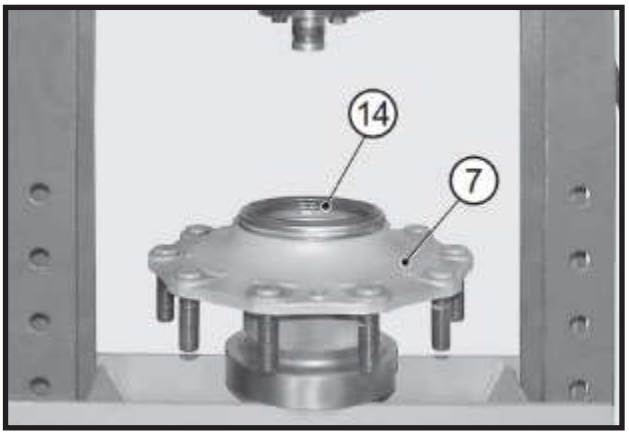

FIGURE 26: Apply a repositionable jointing compound for seals to the outer surface of the sealing ring (**14**).

Position the sealing ring (**14**) in the hub (**7**).

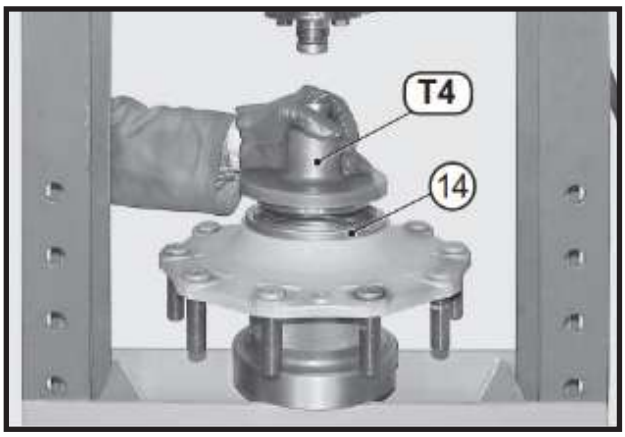

FIGURE 27: Position tool T4 (See drawing T4) and press the sealing ring (**14**) into its seat.

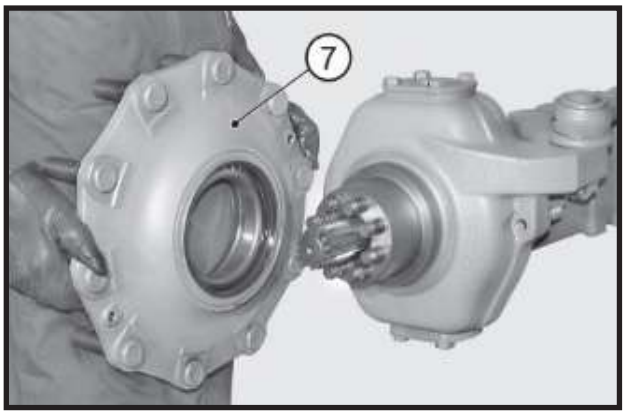

FIGURE 28: Install the hub (**7**).

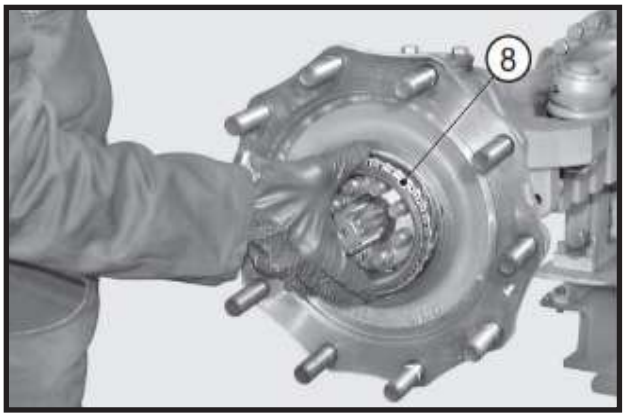

FIGURE 29: Install the external bearing (**8**).

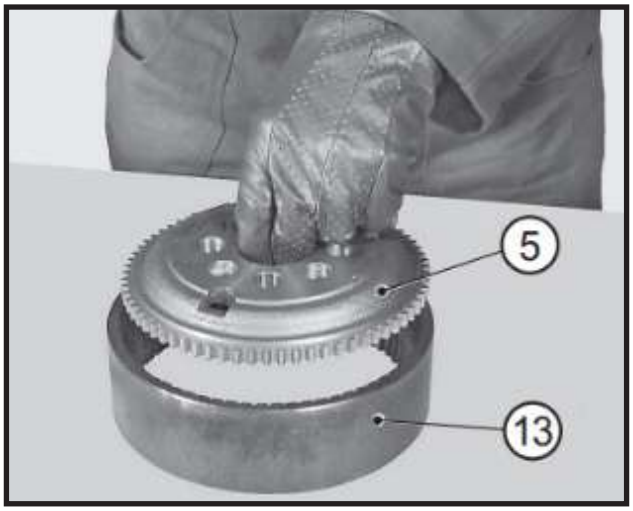

FIGURE 30: Insert the flange (**5**) in the crown (**13**).

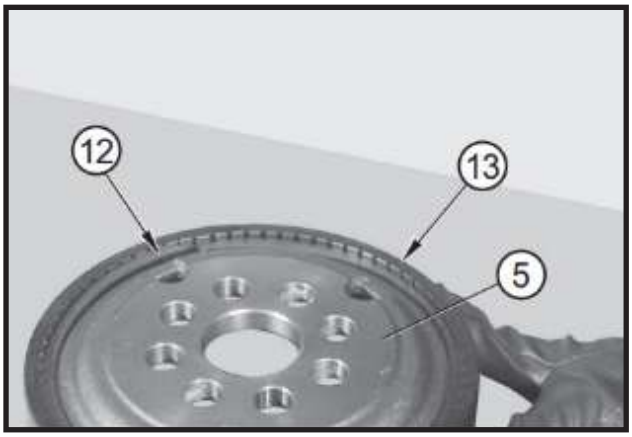

FIGURE 31: Insert the snap ring (**12**) in order to fix the flange (**5**) in the crown (**13**).

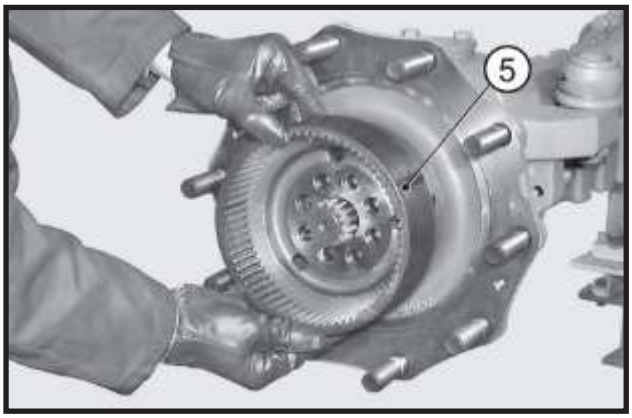

FIGURE 32: Fit the complete crown flange (**5**).

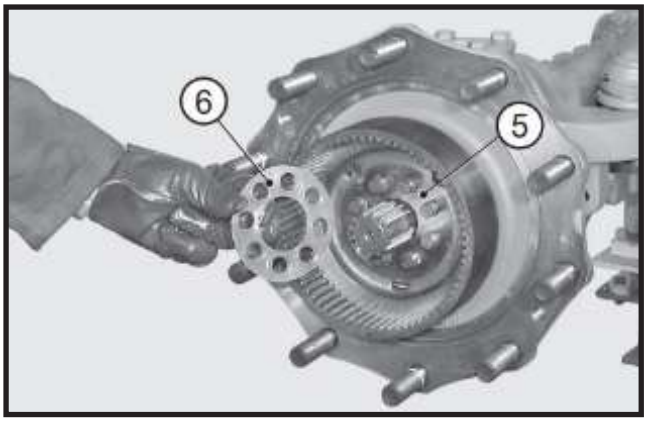

FIGURE 33: Apply Tecnolube Seal 101 grease to the surface of the safety flange (**6**) which touches the crown flange (**5**). Fit the safety flange (**6**).

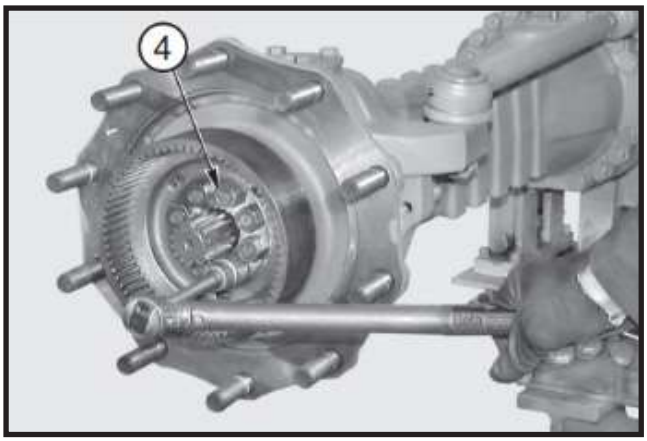

FIGURE 34: Install the new nuts (**4**) and tighten them in short time limited, using the criss-cross method applying initial tightening torque of 74 ft-lb (100 N·m).

Pay attention to clean the thread of the original stud.

Final torque wrench setting: 221 – 244 ft-lb (300 - 330 N·m).

¡	**CAUTION**

Before draining oil, release the internal pressure.

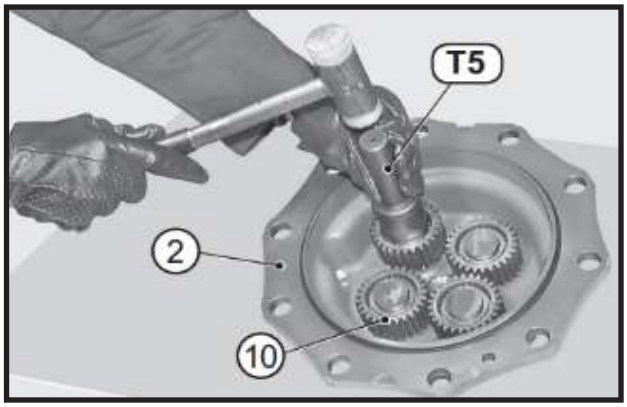

FIGURE 35: With the help of tool T5 (See drawing T5) insert the planetary wheel gears (**10**) into the cover (**2**). Accurately check the orientation.

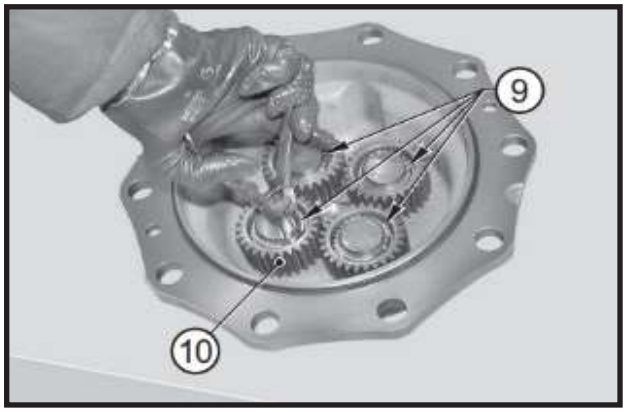

FIGURE 36: Lock the gears (**10**) into position by fitting the snap rings (**9**).

¡	**CAUTION**

It is recommended to use only new components.

Use only new screws pre-treated with Driloc locking adhesive.

Threads must be cleaned from oil.

Clean the thread in the arm. Degrease only non pre-treated threads.

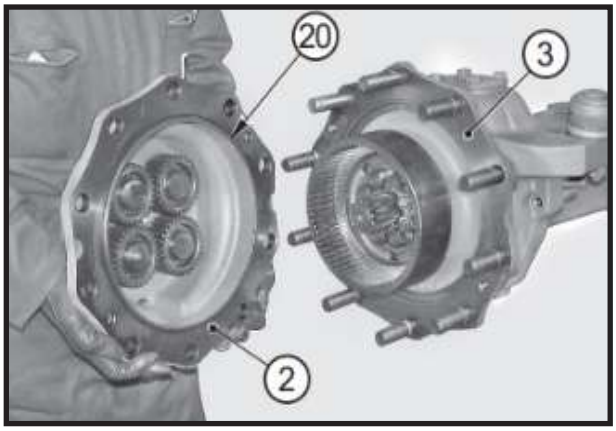

FIGURE 37: Fit the planetary carrier cover (**2**) onto the hub (**3**).

¡	**CAUTION**
Check that the o-ring (20) is in good condition and in position.	

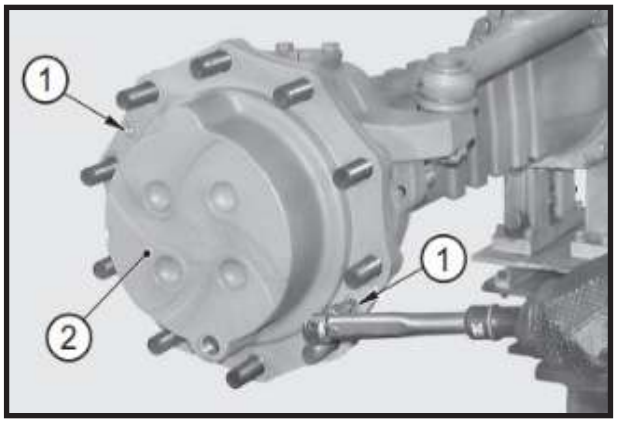

FIGURE 38: Lock the planetary carrier cover (**2**) by tightening the screws (**1**).

Torque wrench setting for screws: 30 – 37 ft-lb (40 - 50 N·m).

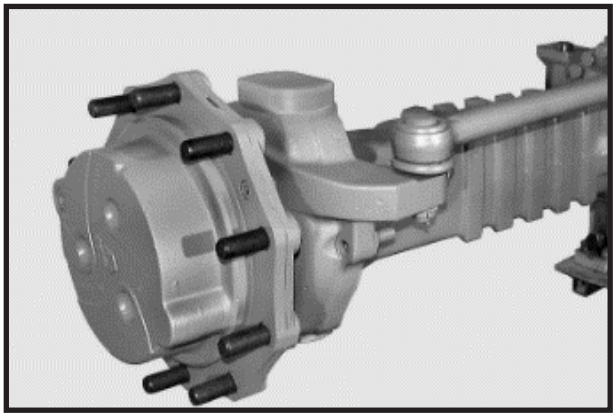

FIGURE 39: Connect the steering bars.

SPECIAL TOOLS

T1

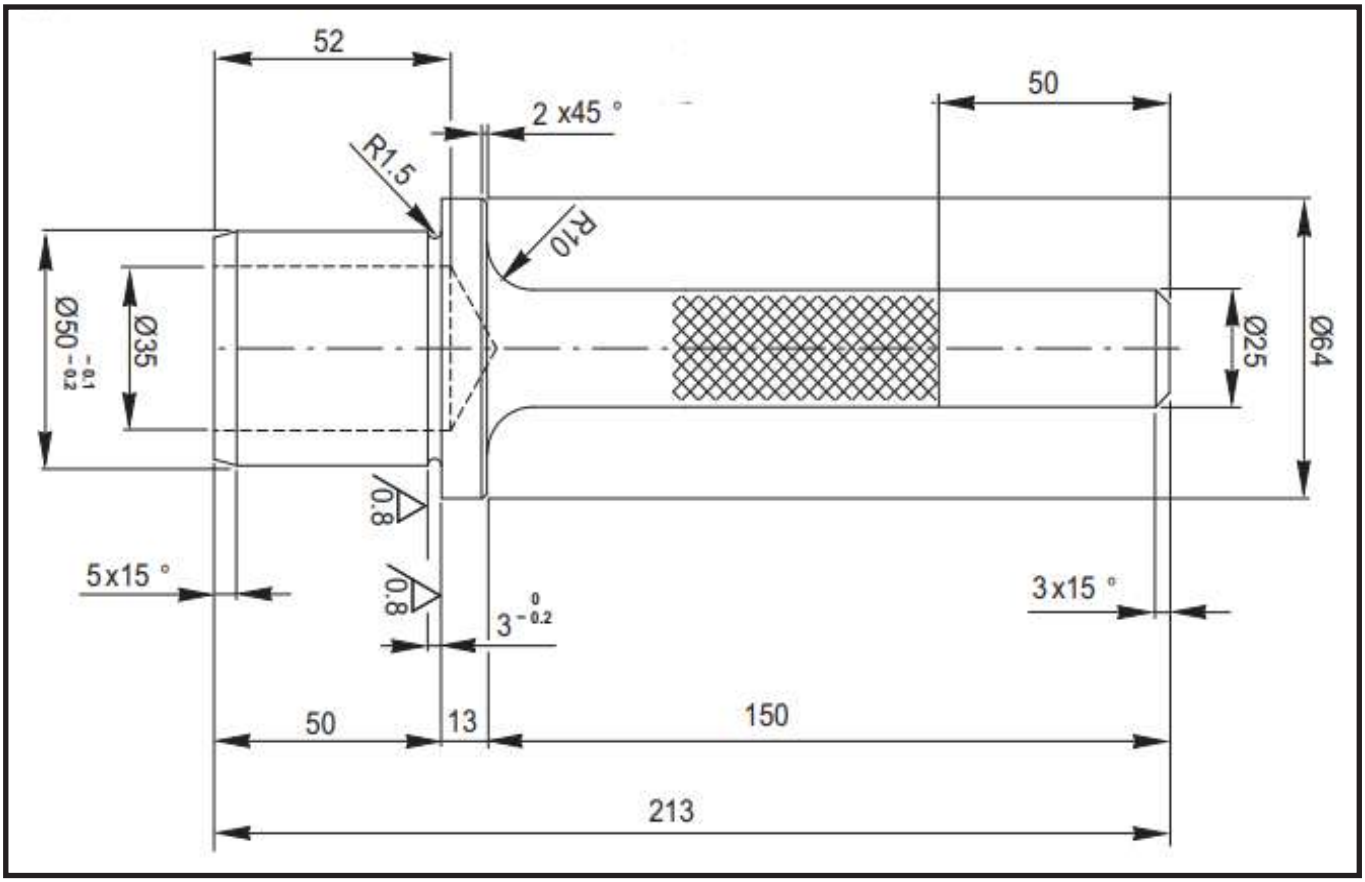

T2

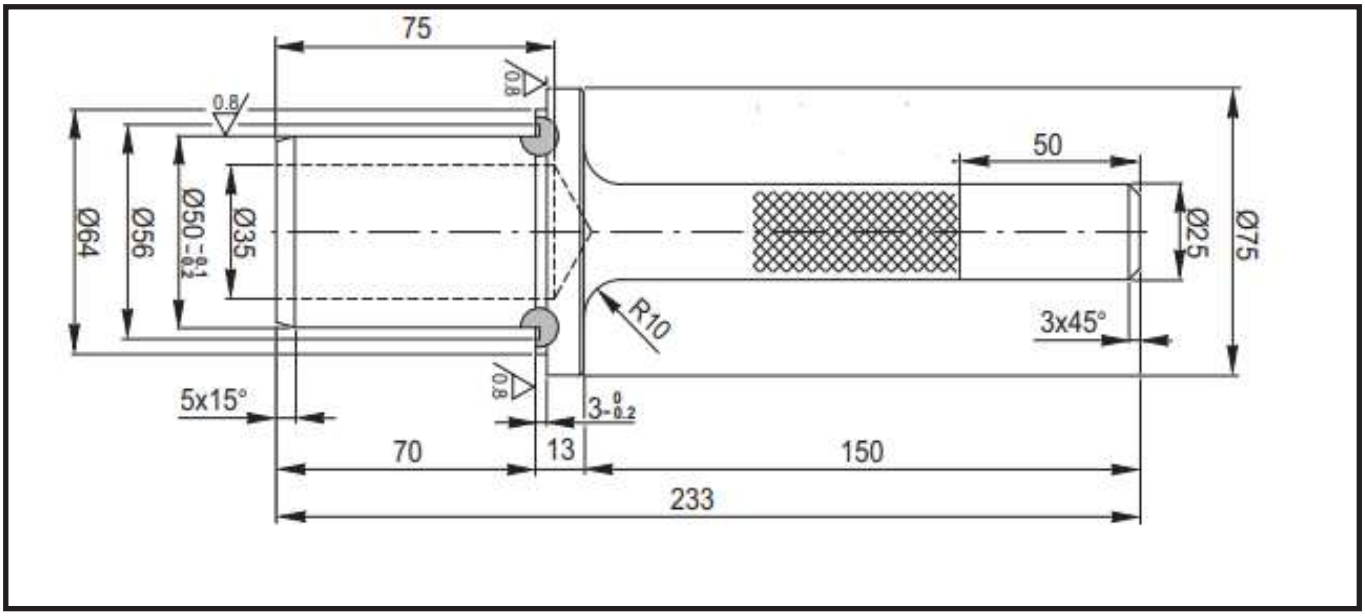

T3

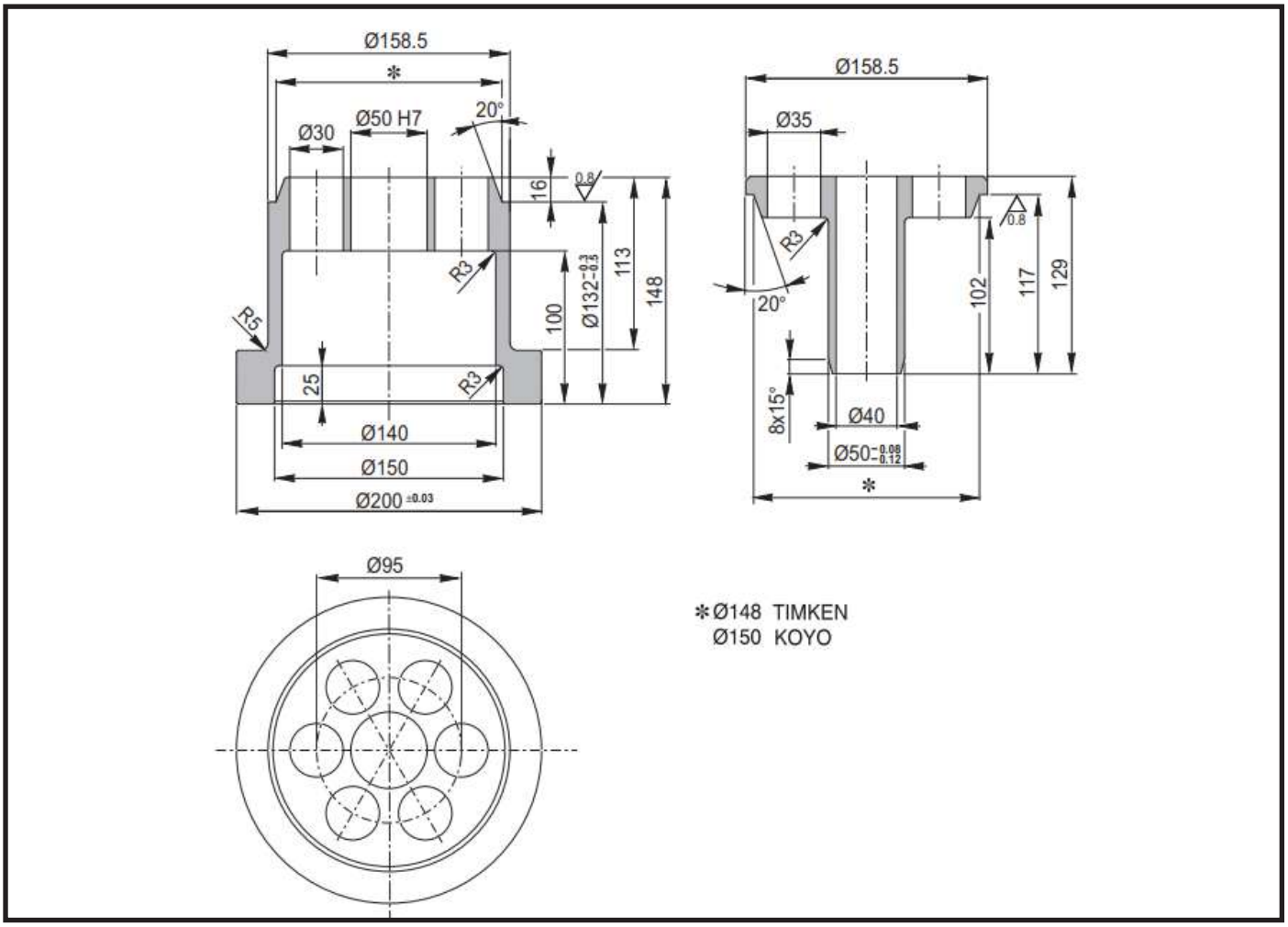
Ø158.5
*
Ø30
Ø50 H7
20°
16
0.8
113
148
100
Ø132
R3
R5
25
Ø140
Ø150
Ø200 ±0.03
Ø158.5
Ø35
R3
20°
102
117
129
0.8
8x15°
Ø40
Ø50
*
Ø95
*Ø148 TIMKEN
Ø150 KOYO

T4

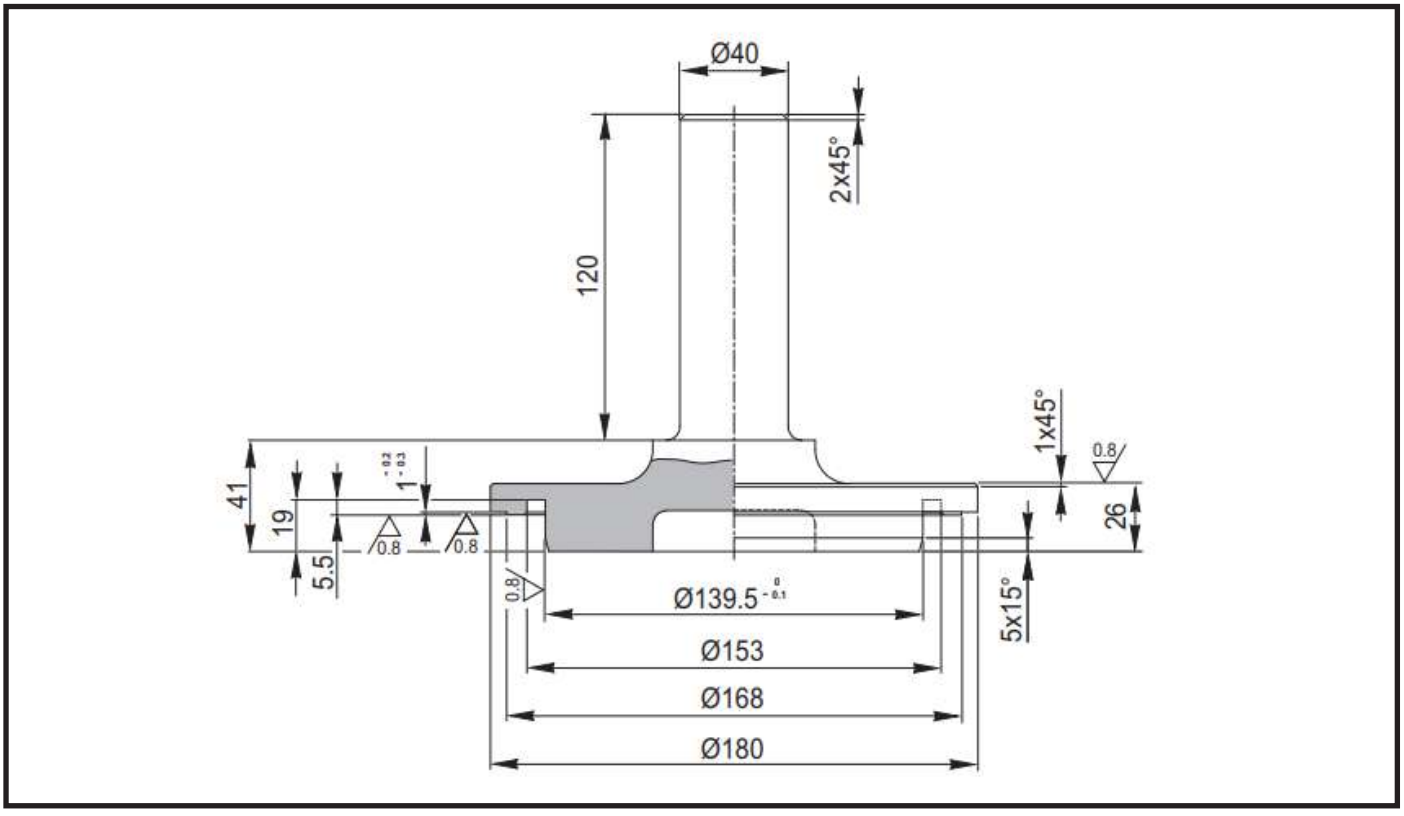
Ø40
2x45°
120
1x45°
0.8
41
19
5.5
1
0.8
0.8
0.8
26
5x15°
Ø139.5
Ø153
Ø168
Ø180

T5

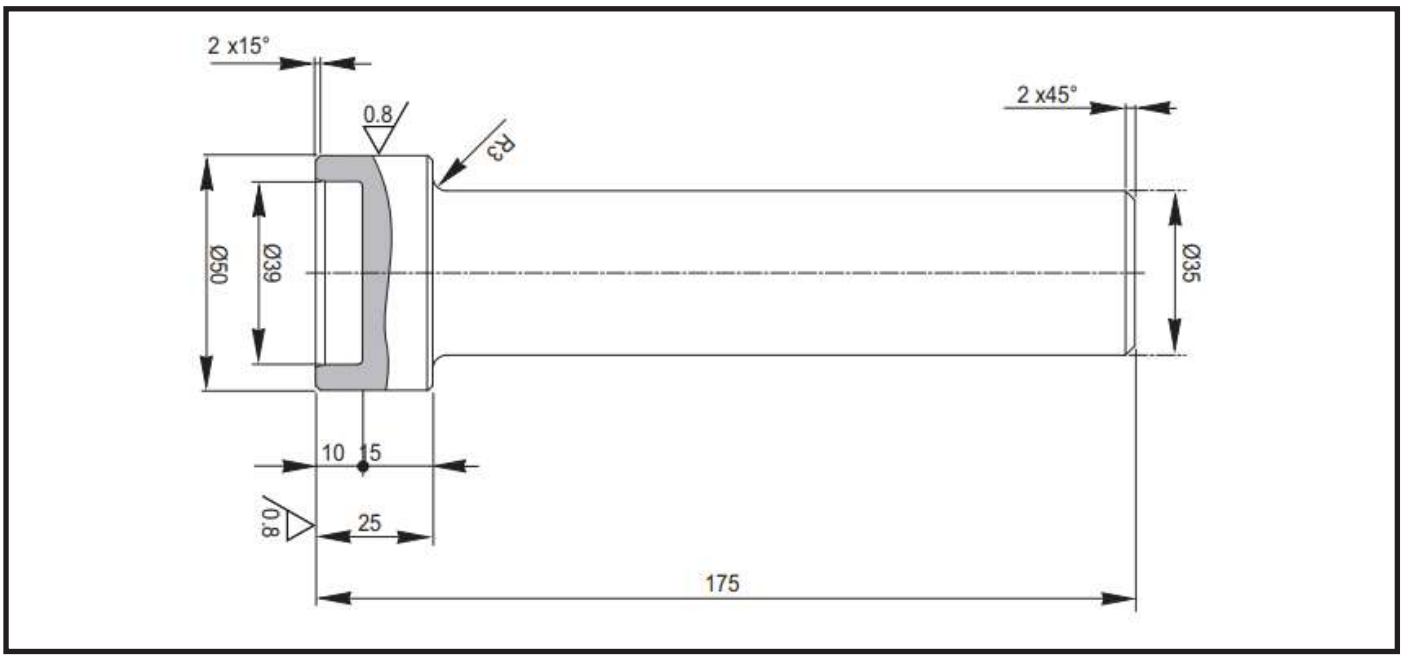

(HEAVY DUTY) PLANETARY REDUCTION GEAR

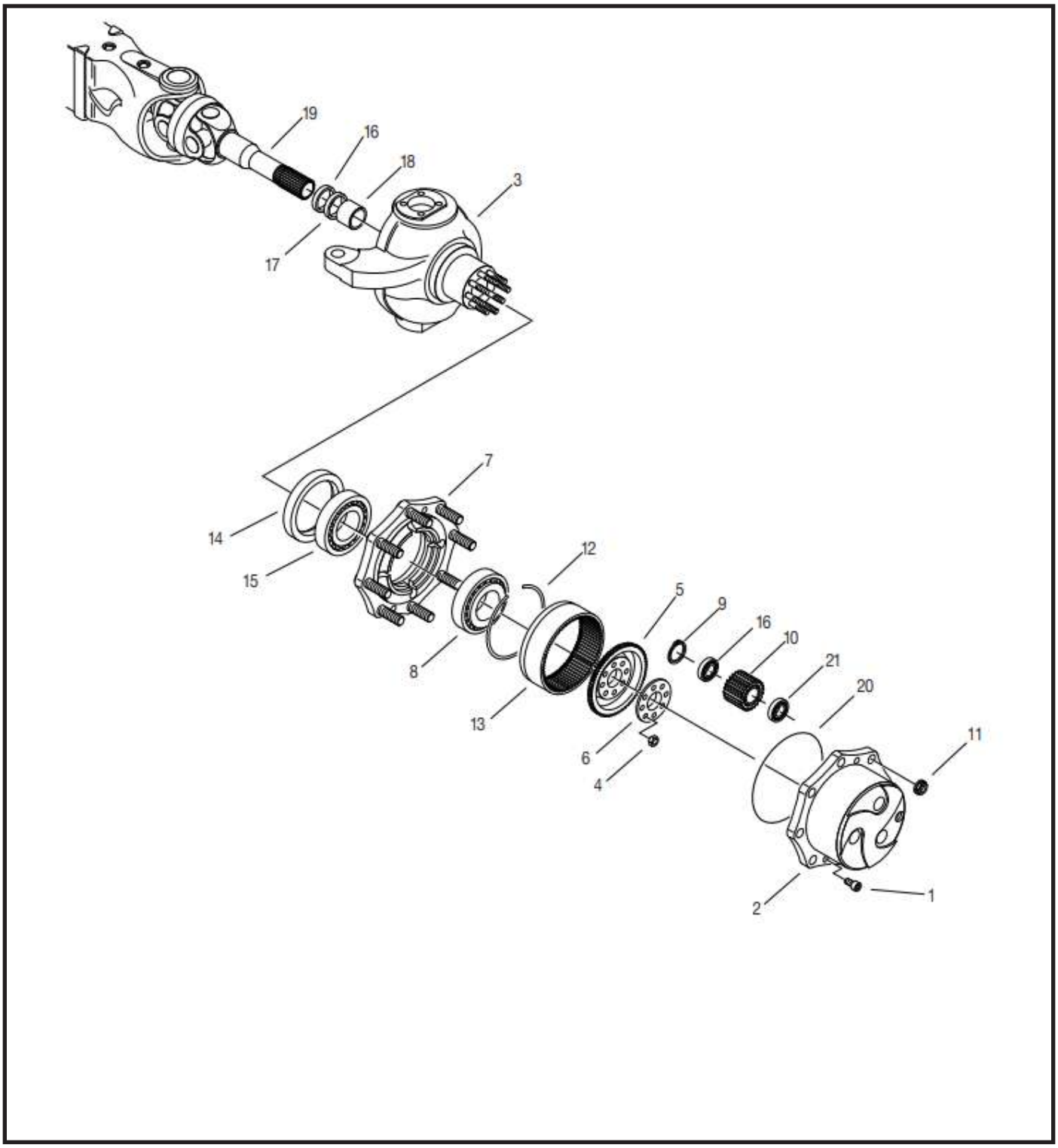

Disassembly

CAUTION

Before draining oil, release the internal pressure.

CAUTION

Perform all operations on both arms.

CAUTION

Make sure all fluids are contained during inspection, maintenance, tests, adjustment and repair of the product. Prepare a suitable container to collect the fluid before removing any component containing fluids. Dispose of all fluids following legal and local regulations.

CAUTION

Hot oil and components can cause personal injury. Avoid skin contact.

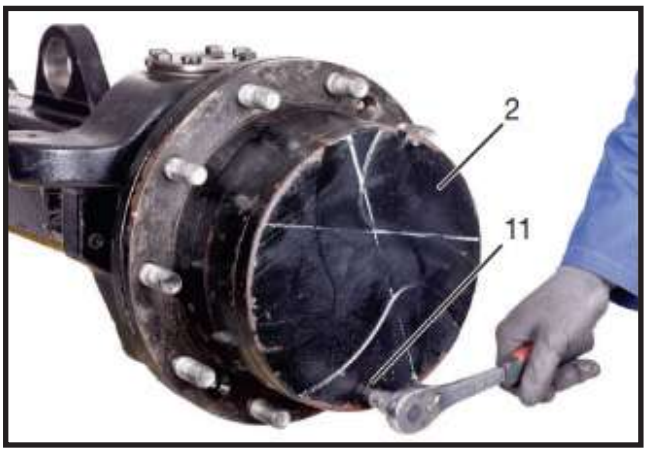

FIGURE 1: Remove the oil drain plug (**11**) with washer and drain oil.

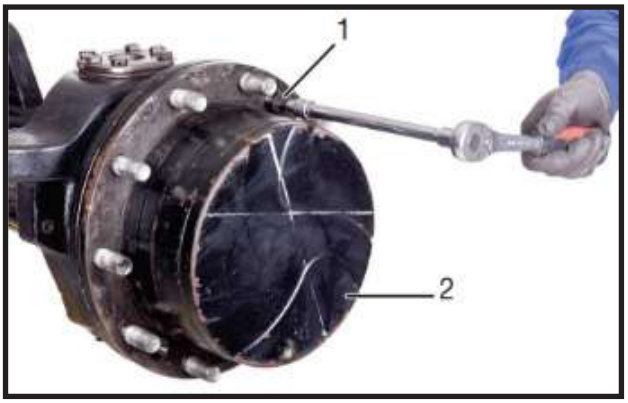

FIGURE 2: Disconnect the tie rods from the steering knuckle (**3**).

Remove the securing screws (**1**) from the planetary carrier cover (**2**).

FIGURE 3: Disjoint the planetary carrier cover (**2**) from the steering knuckle (**3**) by alternatively

Forcing a screwdriver into the appropriate slots.

FIGURE 4: Remove the complete planetary carrier cover (**2**).

FIGURE 5: Use a screwdriver to remove the o-ring (**20**).

FIGURE 6: Remove the snap rings (**9**).

İ	**CAUTION**
	Set the pliers following the correct procedure shown in END-STOP PLIER SETTING.

FIGURE 7: Using a puller, remove the planetary wheel gears (**10**).

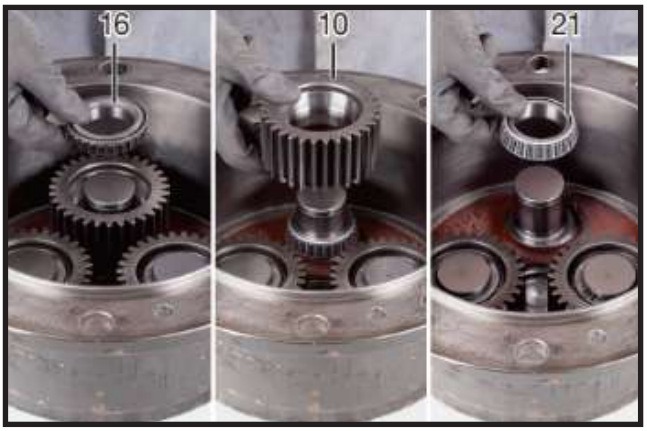

FIGURE 8: Remove the satellite gears (**10**) and bearings (**16, 21**).

FIGURE 9: Loosen and remove the tightening nuts (**4**) from the crown flange (**5**).

FIGURE 10: Remove the safety flange (**6**).

FIGURE 11: Using a puller, remove the complete crown flange (**5**) by acting on the stud bolt.

FIGURE 12: Remove the snap ring (**12**) from the crown (**13**).

FIGURE 13: Remove the crown flange (**5**).

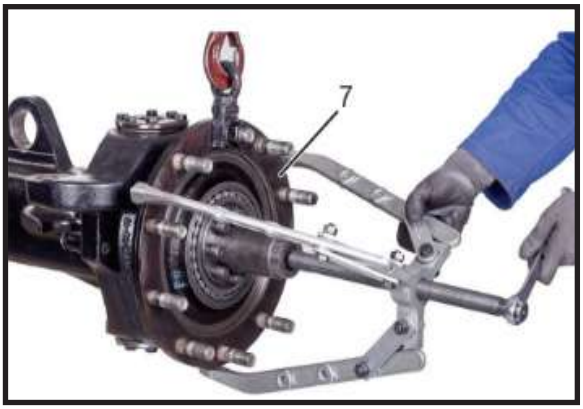

FIGURE 14: Partially extract the hub (**7**) using a plastic hammer.

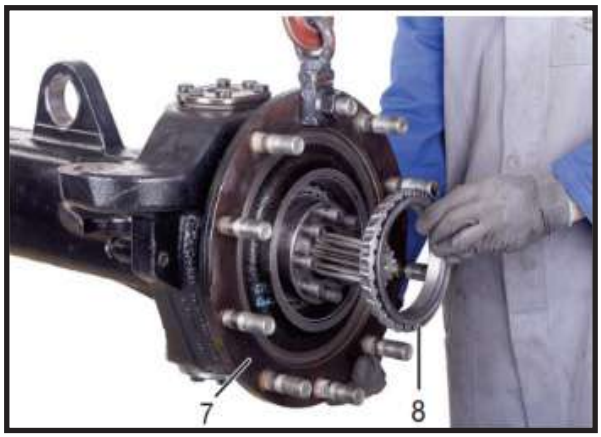

FIGURE 15: Remove the external bearing (**8**).

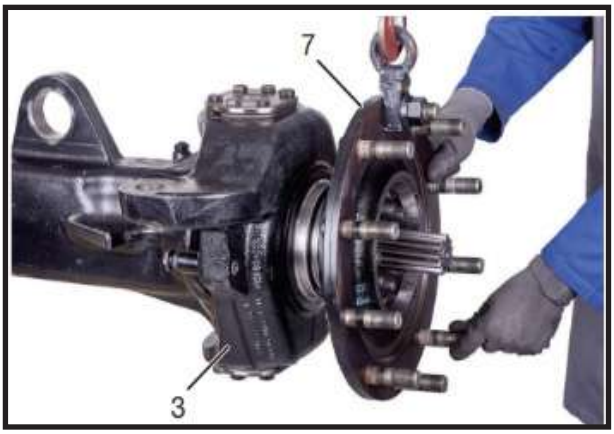

FIGURE 16: Remove the complete hub (**7**).

FIGURE 17: Remove the sealing ring from the hub (**14**)

FIGURE 18: Remove the internal bearing (**15**).

FIGURE 19: Remove the external thrust blocks from the bearings (**8, 15**) force a pin-driver into the appropriate slots on the hub (**7**).

FIGURE 20: Remove the pins and remove the steering knuckle (**3**).

FIGURE 21: Use a puller to remove the sealing ring (**17**) from the steering knuckle (**3**).

FIGURE 22: Use a puller to remove the bearing (**18**) from the steering knuckle (**3**).

Assembly

FIGURE 23: Lubricate the bushing (**18**) and the seat of the steering knuckle (**3**).

Install the bushing (**18**).

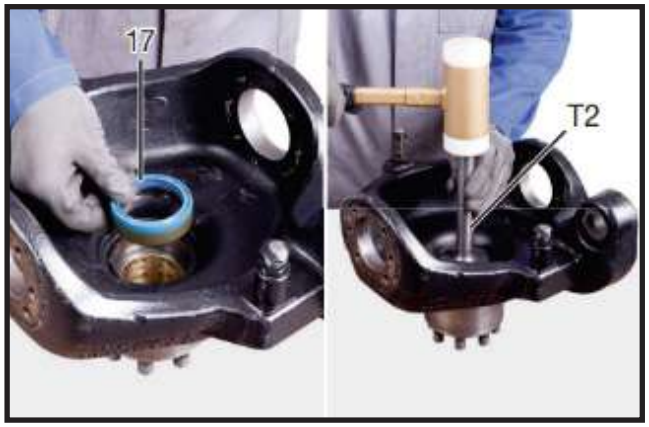

FIGURE 24: Lubricate the outer surface of the sealing ring (**17**).

FIGURE 25: Fit the steering knuckle (**3**) onto the U-joint (**19**) and install the knuckle posts.

FIGURE 26: Position the upper part and press the thrust blocks into the hub (**7**) all the way down

.**FIGURE 27**: Fit the bearing (**15**) into the internal thrust block.

FIGURE 28: Apply a repositionable jointing compound for seals to the outer surface of the sealing ring (**14**). Position the sealing ring (**14**) in the hub (**7**).

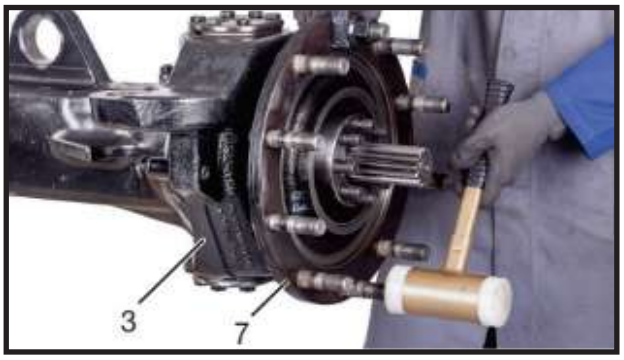

FIGURE 29: Install the hub (**7**).

FIGURE 30: Install the external bearing (**8**).

FIGURE 31: Insert the flange (**5**) in the crown (**13**).

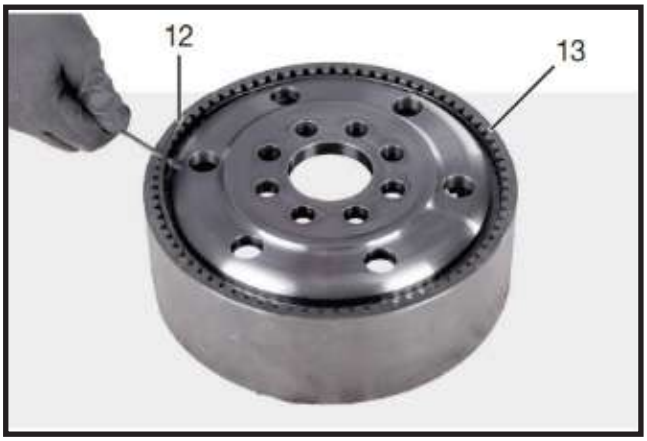

FIGURE 32: Insert the snap ring (**12**) in order to fix the flange (**5**) in the crown (**13**).

FIGURE 33: Fit the complete crown flange (**5**).

i	**CAUTION**
It is recommended to use only new components. Use only new screws pre-treated with Driloc locking adhesive. Threads must be cleaned from oil. Clean the thread in the arm. Degrease only non pre-treated threads.	

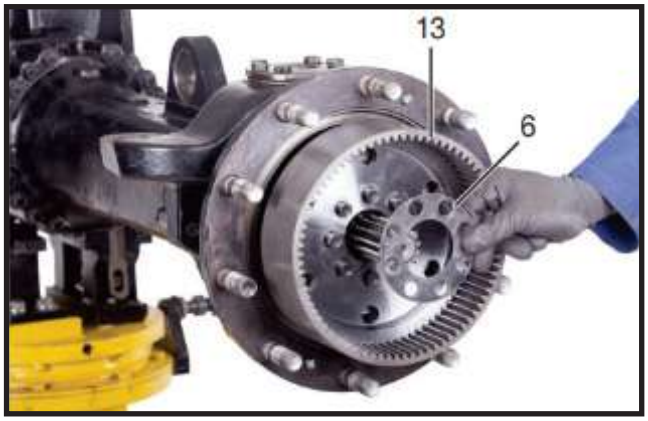

FIGURE 34: Apply Tecnolube Seal 101 grease to the surface of the safety flange (**6**) which touches the crown flange (**5**). Fit the safety flange (**6**).

FIGURE 35: Install the new nuts (**4**) and tighten them in short time limited, using the criss-cross method applying initial tightening torque of 74 ft-lb (100 N·m).

Pay attention to clean the thread of the original stud.

Final torque wrench setting: 221 – 243 ft-lb (300 - 330 N·m).

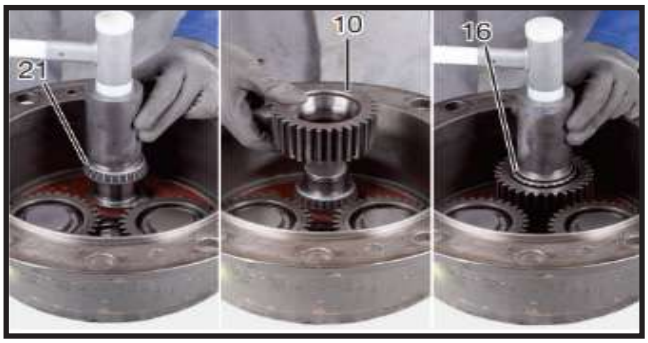

FIGURE 36: Using a drift, insert the first bearing (**21**) into the cover (**2**).

Fit the planetary gear (**10**) onto the planetary gear cover (**2**), and insert the second bearing (**16**) using a drift.

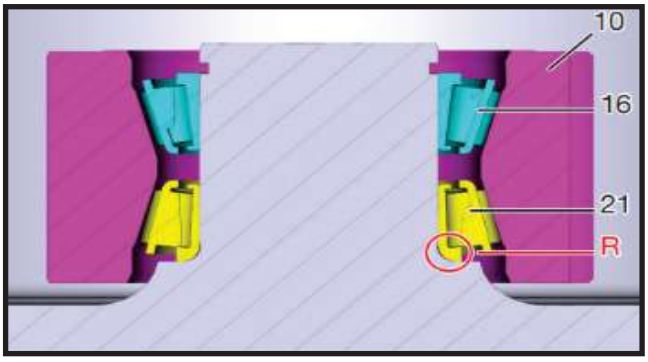

FIGURE 37: Install the bearing (**21**) with radius "R" on inner thrust block first, as shown in figure.

CAUTION

If bearing position is switched, snap ring (**9**) will not engage its seat.

FIGURE 38: Lock the gears (**10**) into position by fitting the snap rings (**9**).

FIGURE 39: Lubricate with grease and replace the o-ring (**20**).

FIGURE 40: Fit the planetary carrier cover (**2**) onto the hub (**3**).

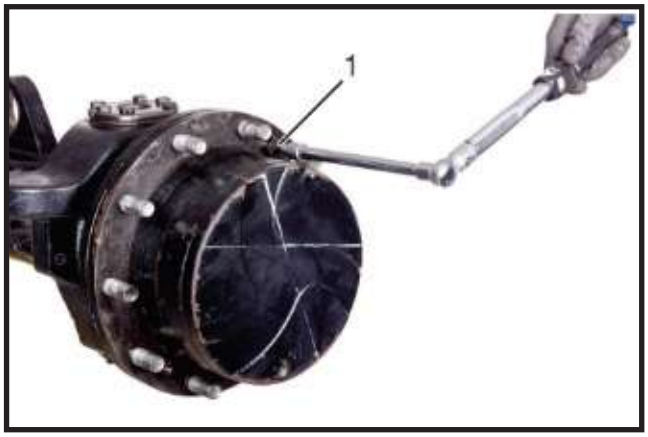

FIGURE 41: Lock the planetary carrier cover (**2**) by tightening the screws (**1**).

Torque wrench setting for screws: 30 – 37 ft-lb (40 - 50 N·m).

CAUTION

Set the pliers following the correct procedure shown in END-STOP PLIER SETTING.

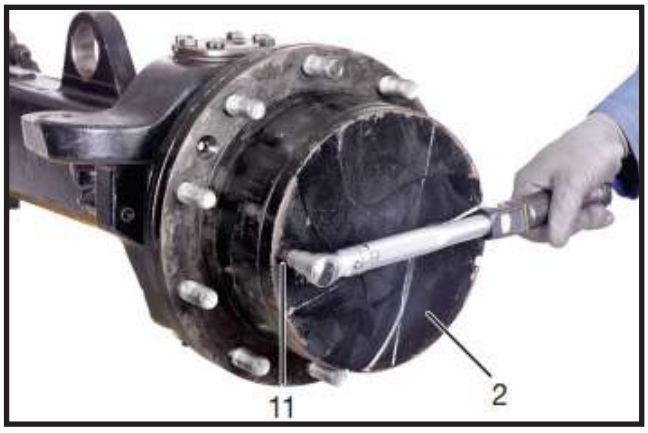

FIGURE 42: Fill with appropriate type and quantity of oil.

Install the oil fill plug (**1**) and washer. Torque wrench setting: 26 – 37 ft-lb (35 - 50 N·m).

SPECIAL TOOLS

T1

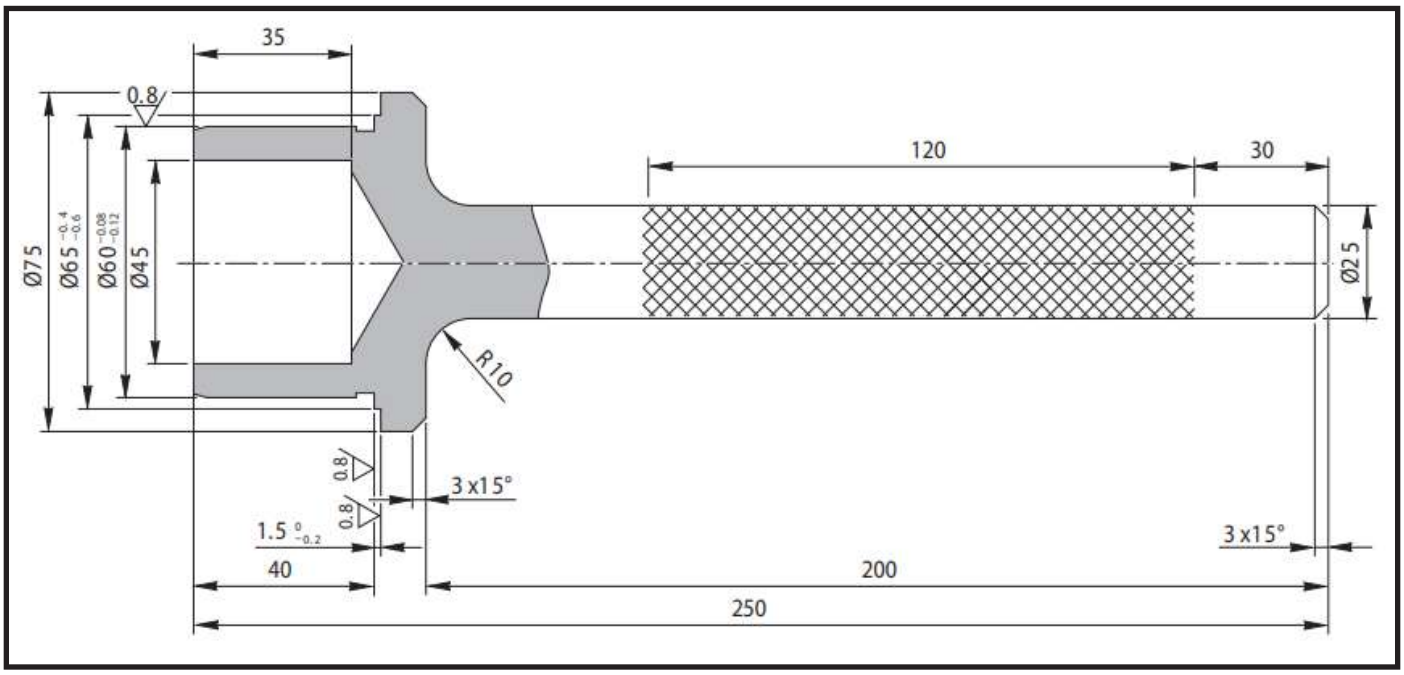

T2

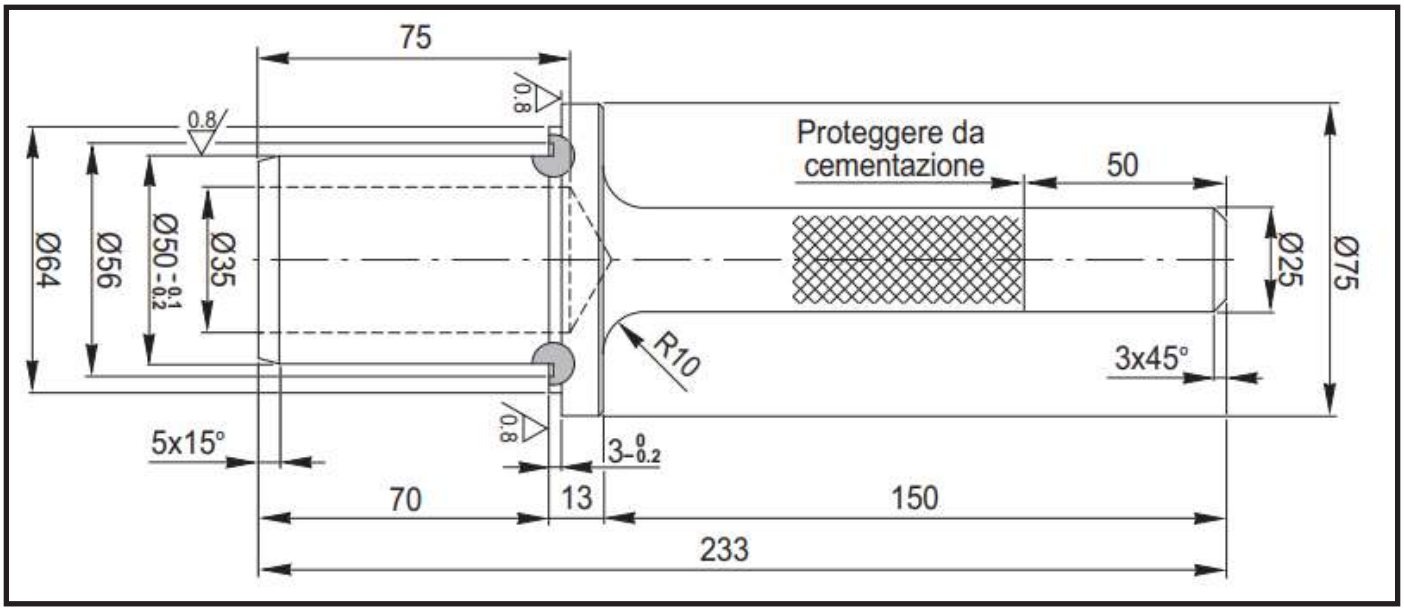

T3

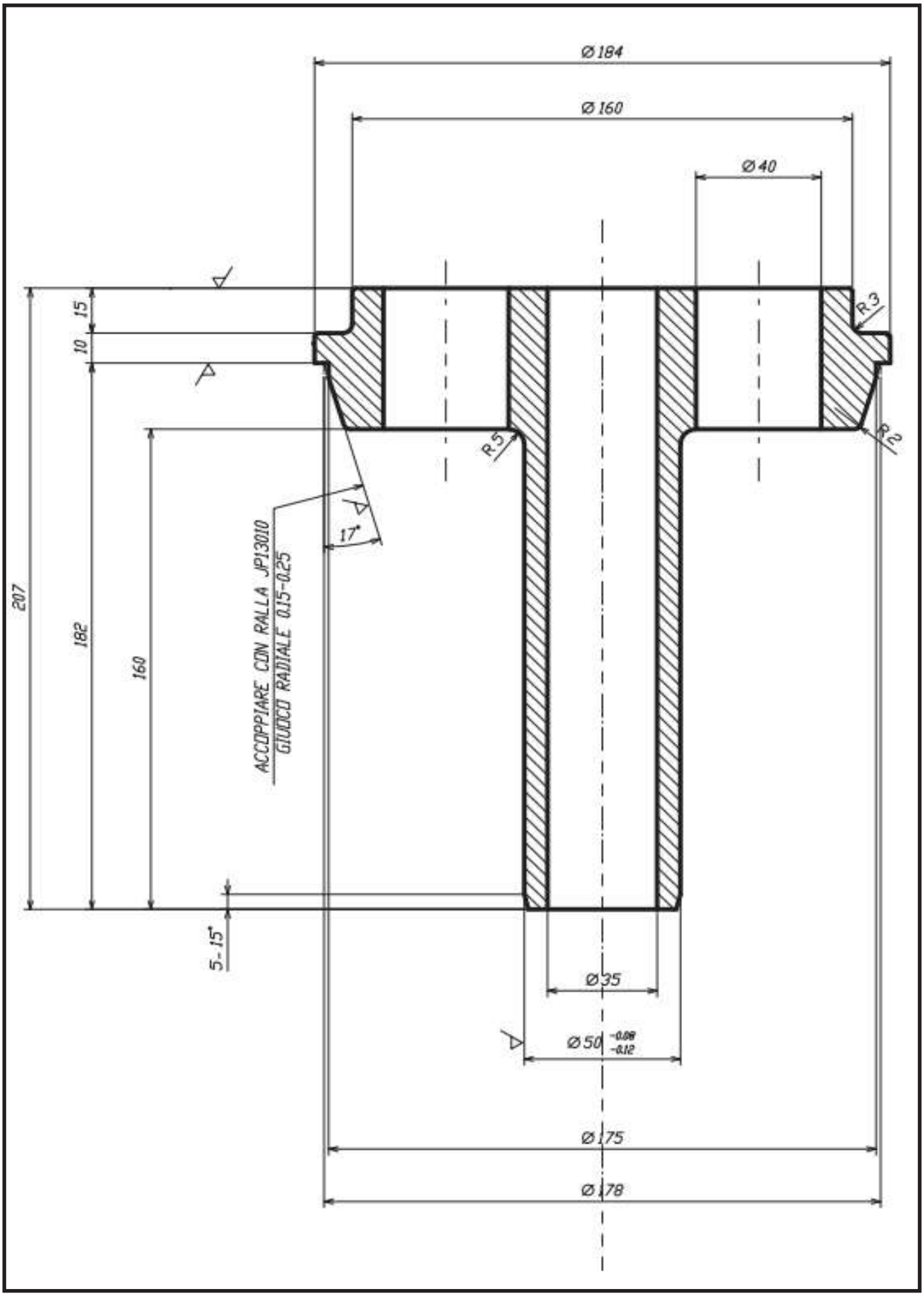
Ø184
Ø160
Ø40
15
10
R3
R5
R2
17°
207
182
160
ACCOPPIARE CON RALLA JP13010
GIUOCO RADIALE 0.15-0.25
5-15°
Ø35
Ø50 -0.08 -0.12
Ø175
Ø178

T4

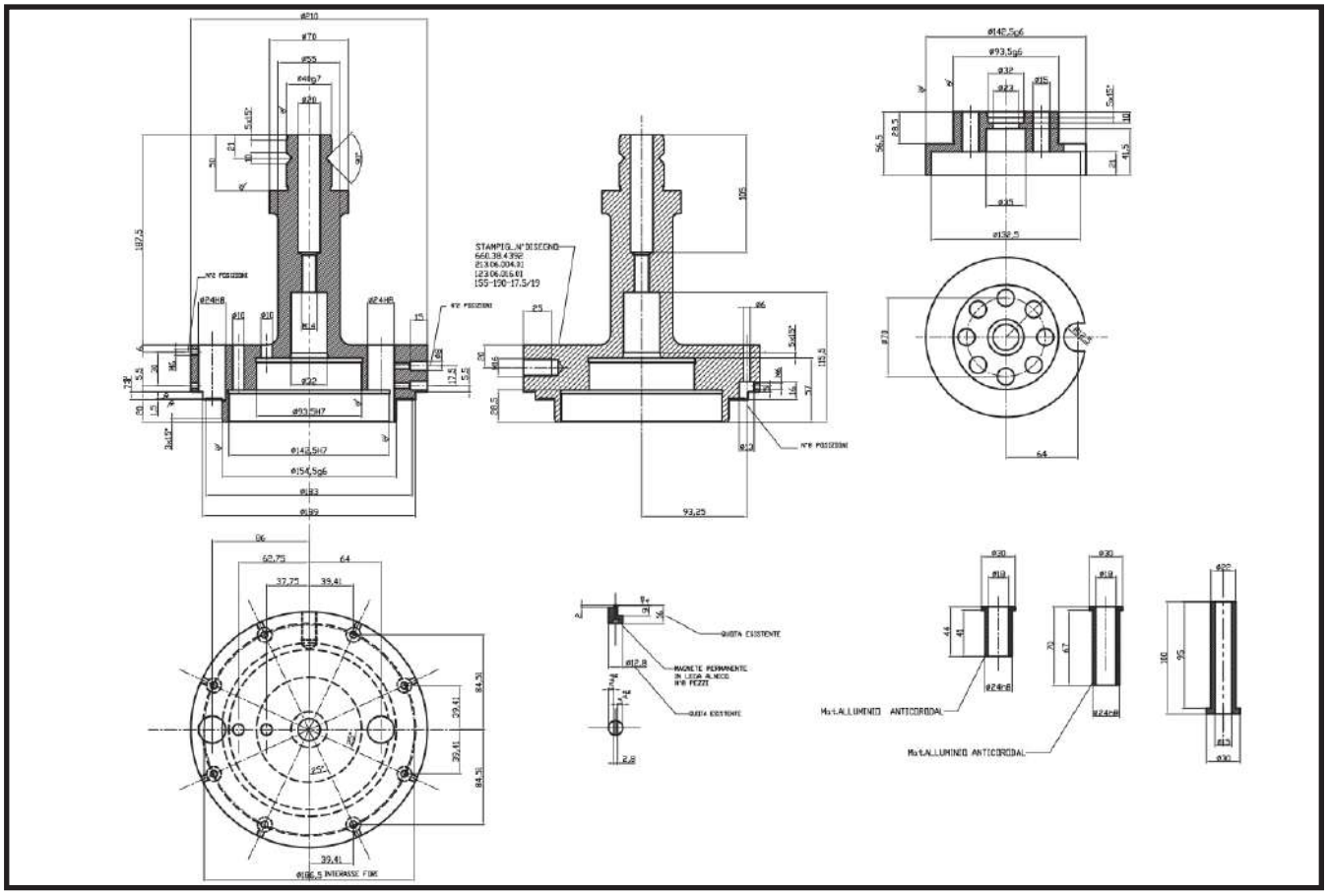

OPTICAL SENSOR AND MAGNETIC SENSOR

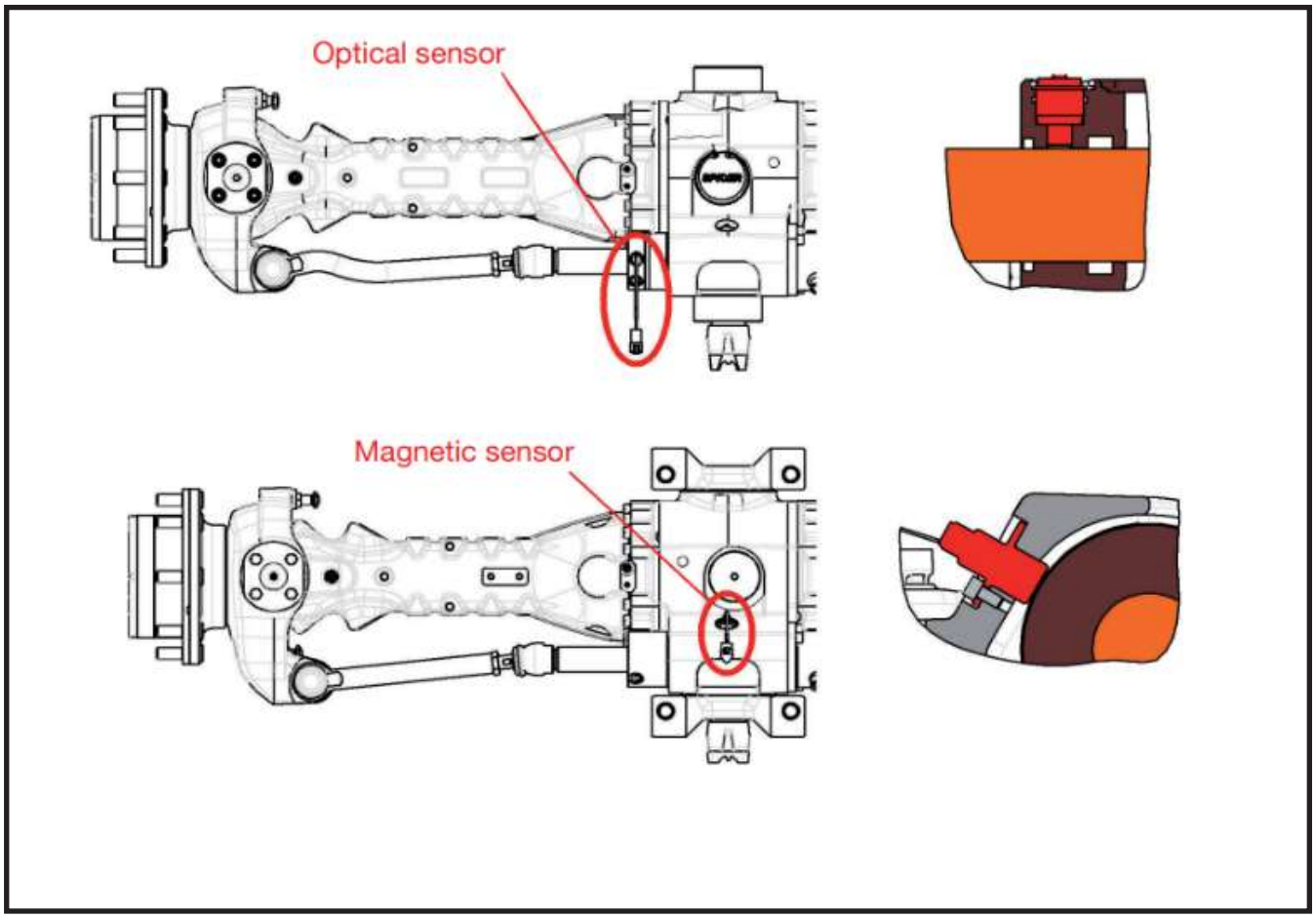

Disassembly

CAUTION

Before draining oil, release the internal pressure.

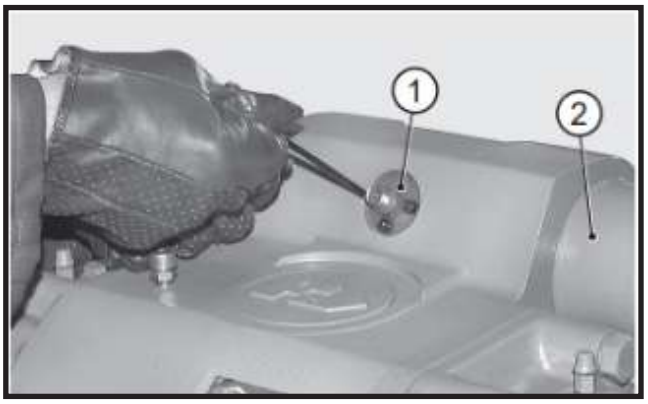

FIGURE 1: Remove the centering sensor (**1**) of the steering piston (**2**), if supplied.

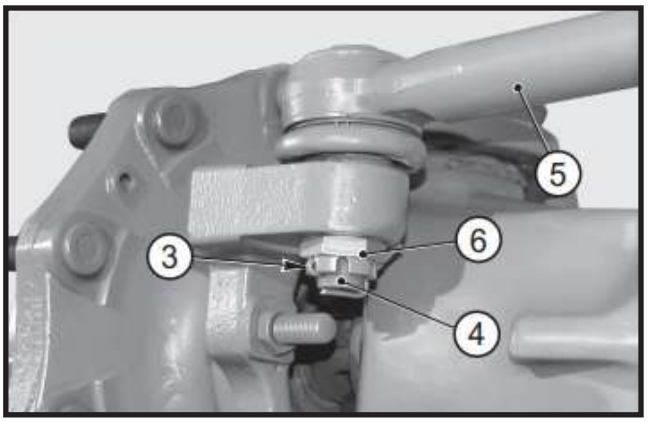

FIGURE 2: OLD VERSION Remove the safety cotter pins (**3**) from the articulation pins (**4**) of the tie rods (**5**). Remove the castellated nuts (**6**) that lock the articulation pins (**4**).

CAUTION

Dispose of used cotter pins.

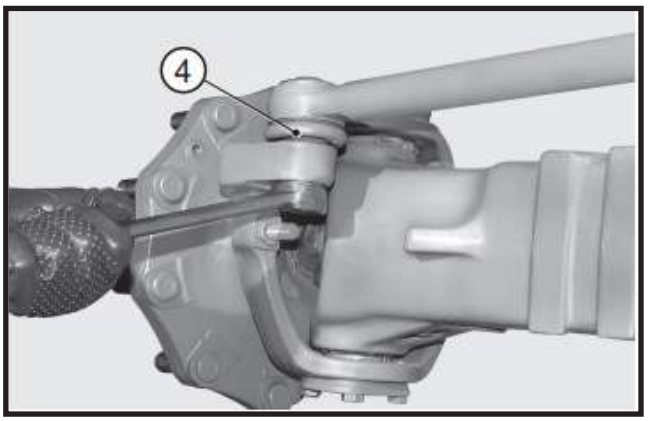

FIGURE 3: NEW VERSION Remove the nuts (**6**) that lock the articulation pins (**4**).

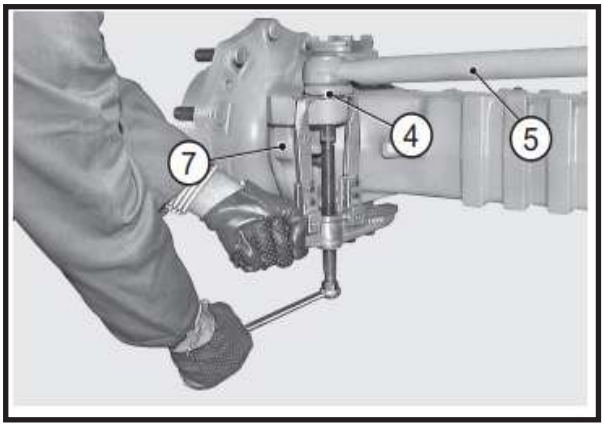

FIGURE 4: Disconnect the tapered pins of the articulation (**4**) from the steering knuckle (**7**) by means of a puller.

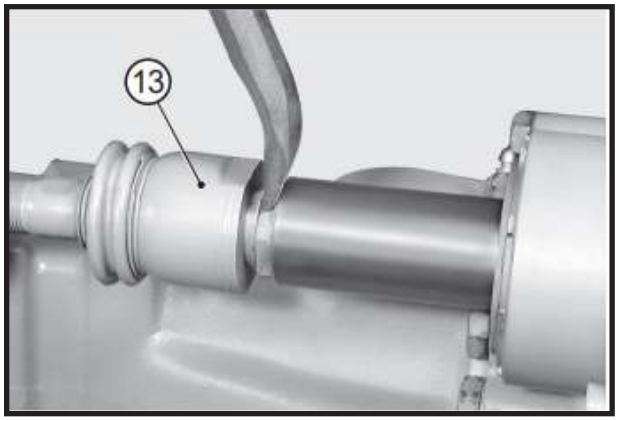

FIGURE 5: If the connection of the tie rods includes a safety collar (**13**), raise the border.

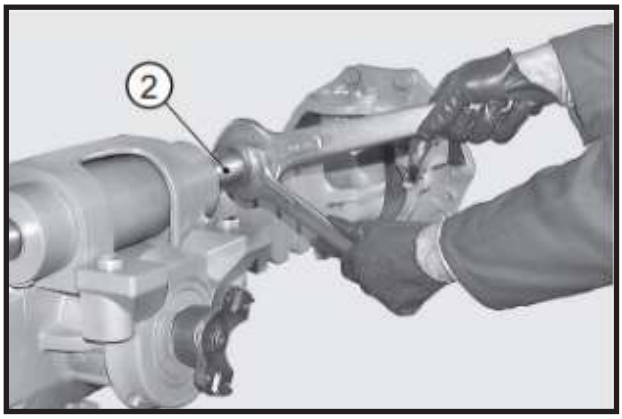

FIGURE 6: Disconnect left and right tie rods (**5**) from the piston (**2**).

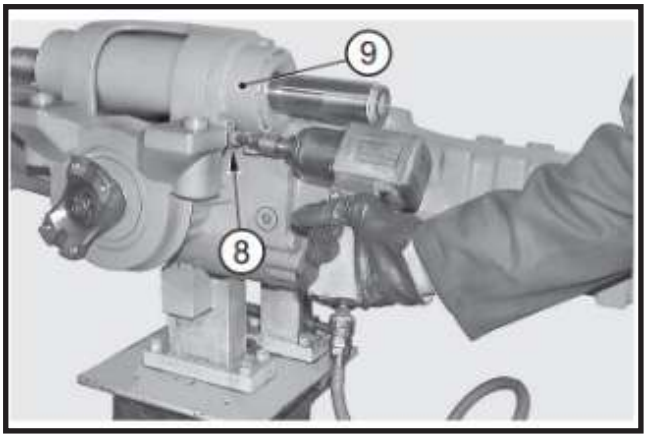

FIGURE 7: Remove the securing screws (**8**) from the steering cylinder (**9**).

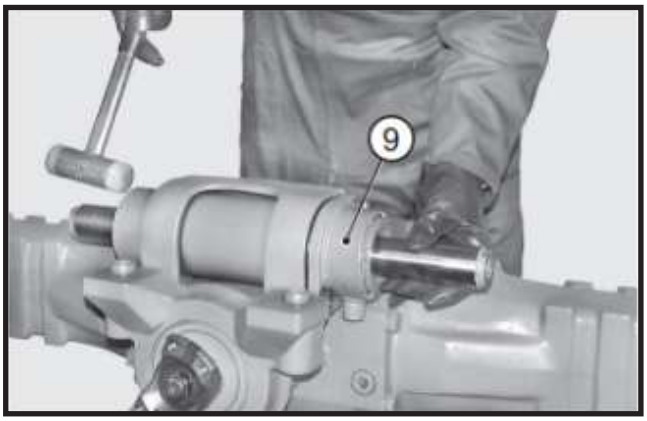

FIGURE 8: Extract the cylinder (**9**) using a plastic hammer.

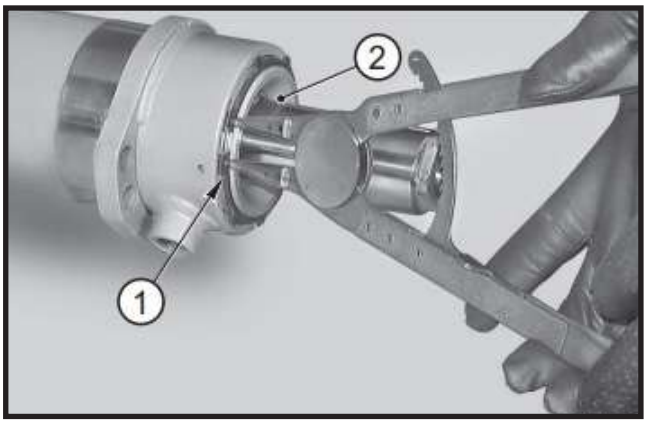

FIGURE 9: Remove the snap ring (**1**) from the cylinder head (**2**).

CAUTION

Set the pliers following the correct procedure shown in END-STOP PLIER SETTING.

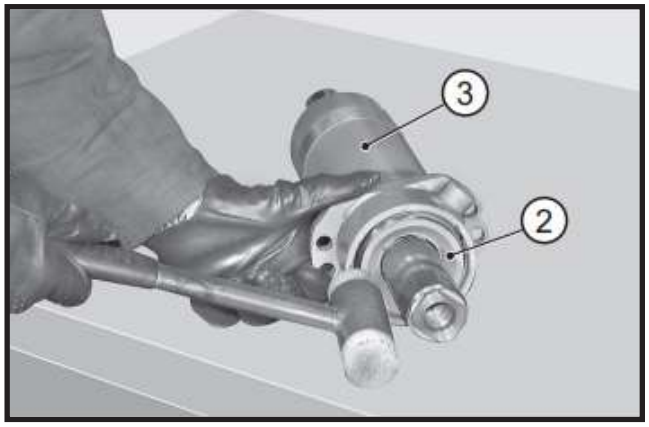

FIGURE 10: Using a plastic hammer, push the head (**2**) inside the cylinder (**3**).

CAUTION

Write the assembly side of the piston (**5**). The beveled part “A” of the piston is oriented towards the head (**2**).

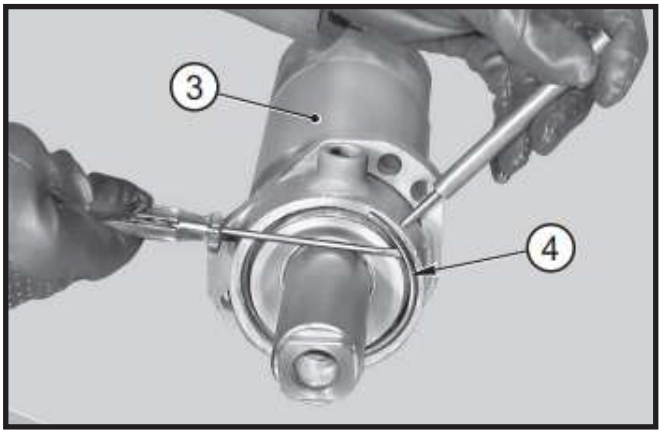

FIGURE 11: Using a drift, apply pressure to the stop ring (**4**) that is placed inside the cylinder (**3**) and extract the ring using a screwdriver.

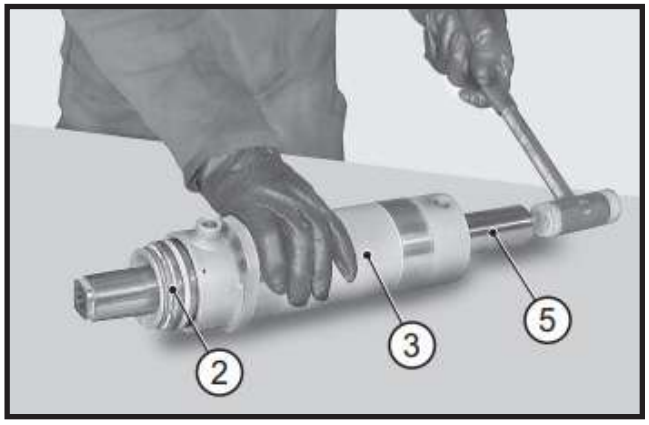

FIGURE 12: Hammer the piston (**5**) on the rear of the head (**2**) using a plastic hammer. Continue hammering until the head (**2**) is ejected from the cylinder (**3**).

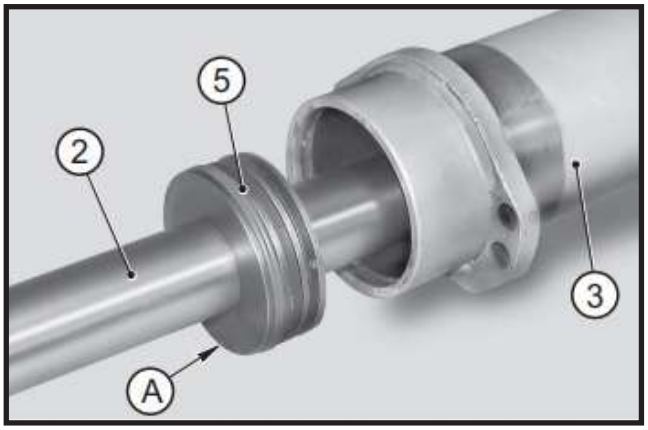

FIGURE 13: Disassemble the cylinder unit (3) by extracting first the head (2), then the piston (5).

CAUTION

Thoroughly check that positioning of the anti-extrusion ring (**7**) is correct.

Assembly

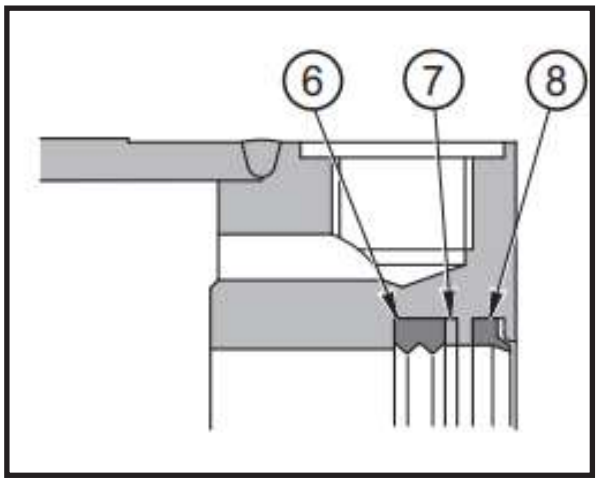

FIGURE 14: After applying grease, install the sealing ring (**6**) of the shaft, the anti-extrusion ring (**7**) and the scraper ring (**8**) inside the cylinder (**3**).

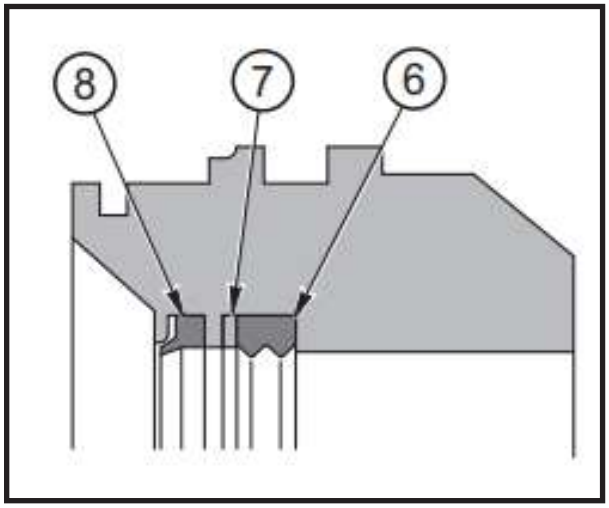

FIGURE 15: After applying grease, install the sealing ring (**6**) of the shaft, the anti-extrusion ring (**7**) and the scraper ring (**8**) in the head (**2**).

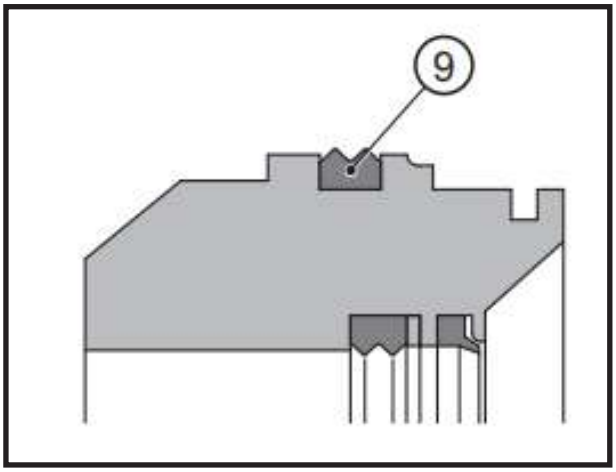

FIGURE 16: Fit the seal (**9**) onto the outside of the head (**2**).

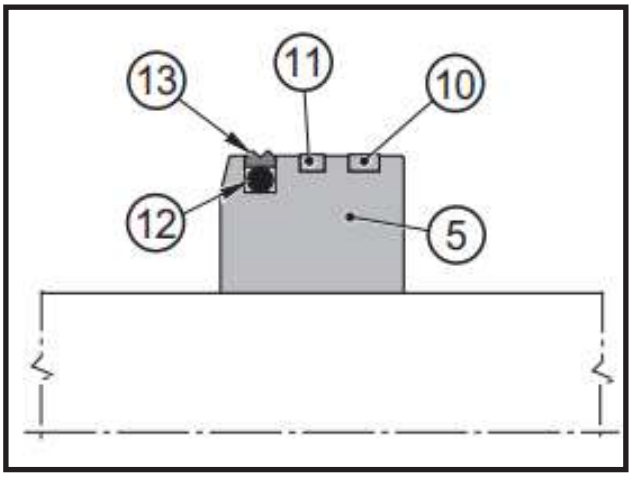

FIGURE 17: Prepare the piston (**5**) by fitting it with the guide ring (**10**), the magnetic ring (**11**), the o-ring (**12**) and the seal (**13**).

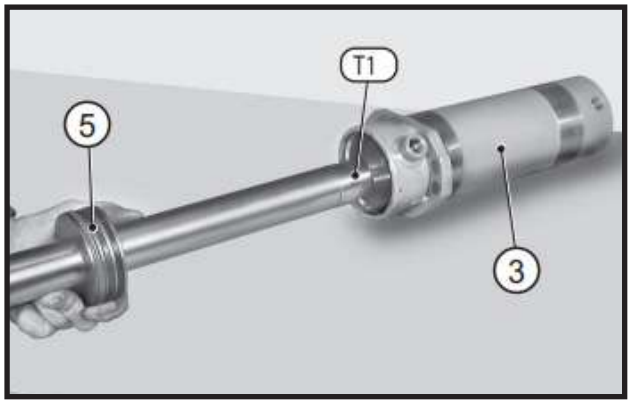

FIGURE 18: Apply tool T1 to the shaft on the opposite side of the head (**2**) and center it on the cylinder (**3**) so that it fits into the piston (**5**).

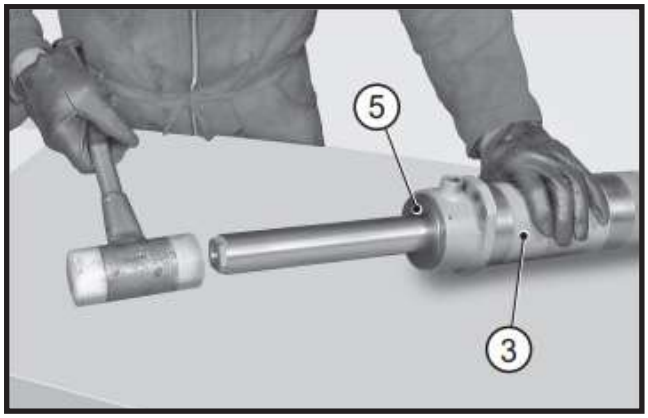

FIGURE 19: Push the piston (**5**) into the cylinder for 4 in (100 mm) using a plastic hammer.

CAUTION

1- In order to facilitate assembly, apply grease to the outer surface of the piston.

2- Do not roll the seal (**9**) up.

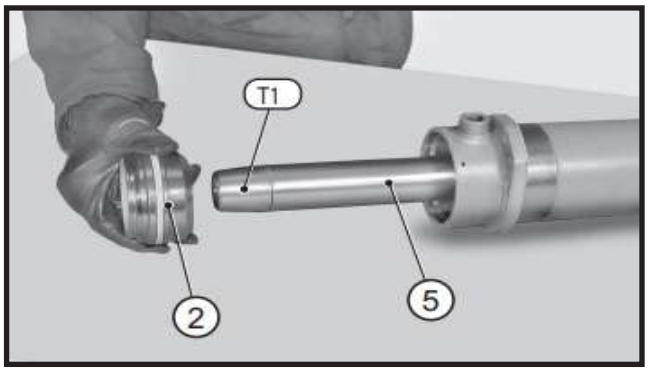

FIGURE 20: Remove tool T1 and apply it to the opposite side of the piston (**5**).

CAUTION

1- In order to facilitate assembly, apply grease.

2- If a centering sensor is not fitted, then the magnetic ring (**11**) should be replaced by another guide ring (**10**).

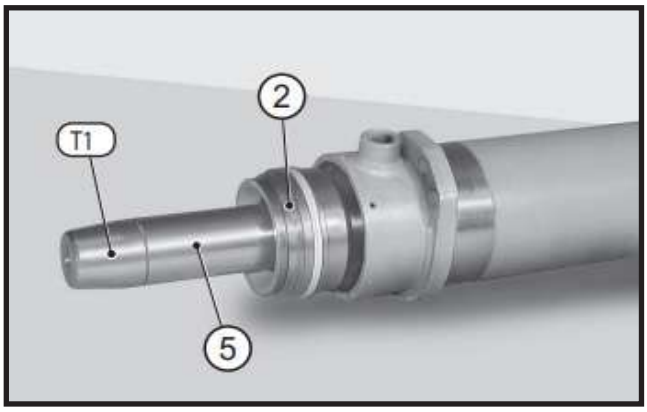

FIGURE 21: Apply grease to head (**2**) seals, fit the head onto the piston and push it into the cylinder (**3**) using a plastic hammer.

CAUTION

Set the pliers following the correct procedure shown in END-STOP PLIER SETTING.

CAUTION

Make sure that the snap ring (**1**) is securely fastened in its seat. If necessary, force it into its seat using a drift and a hammer.

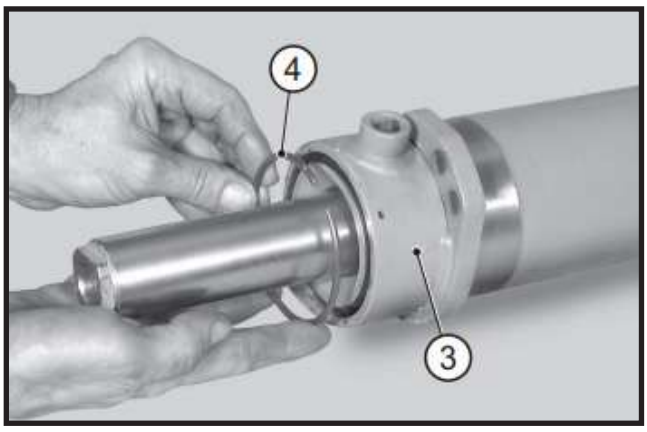

FIGURE 22: Insert the stop ring (**4**) ensuring that it fits into the seat of the cylinder (**3**).

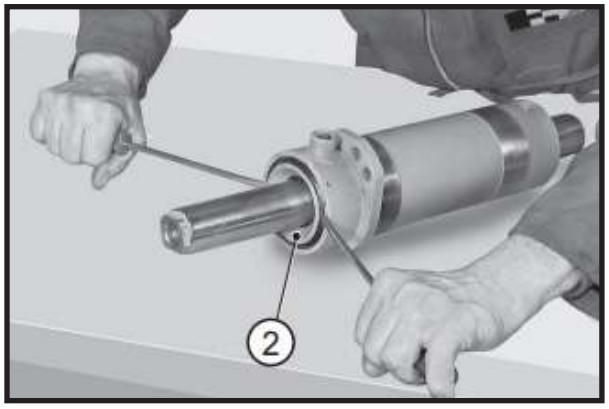

FIGURE 23: Apply pressure to the head using two screwdrivers or levers until the head is fastened onto the stop ring (**4**).

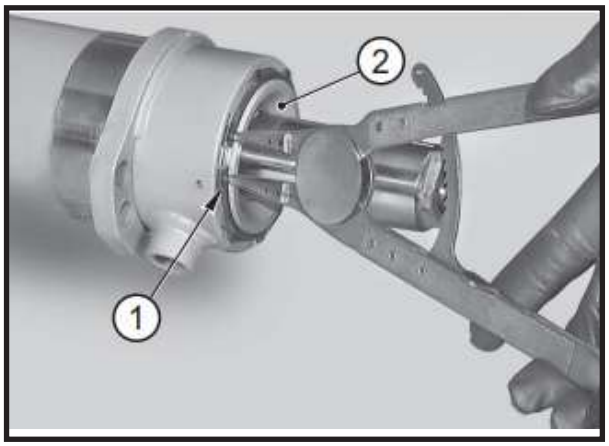

FIGURE 24: Fit the snap ring (**1**) on the head (**2**).

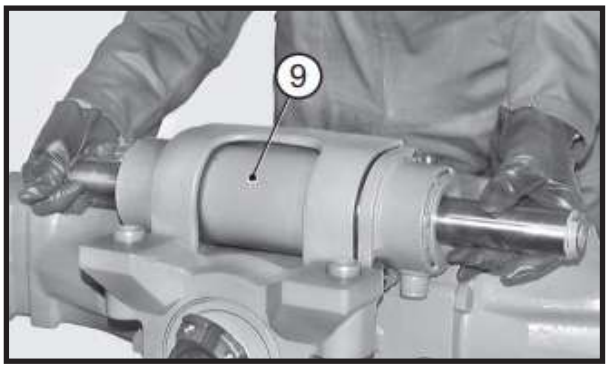

FIGURE 25: Check that the o-rings (**15**) of the axle unit are in good condition; lubricate the seats of the seals (**15**) and fit the steering cylinder (**9**) into its seat.

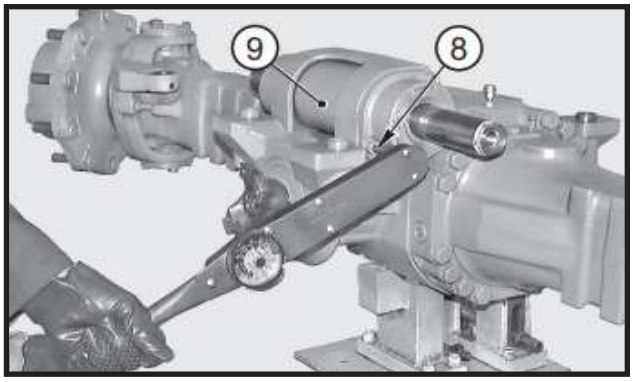

FIGURE 26: Apply Loctite 242 to threaded portion of the capscrew (**8**).

Lock the cylinder by criss-cross method the screws (**8**). Torque wrench setting: 86 – 94 ft-lb (116 - 128 N·m).

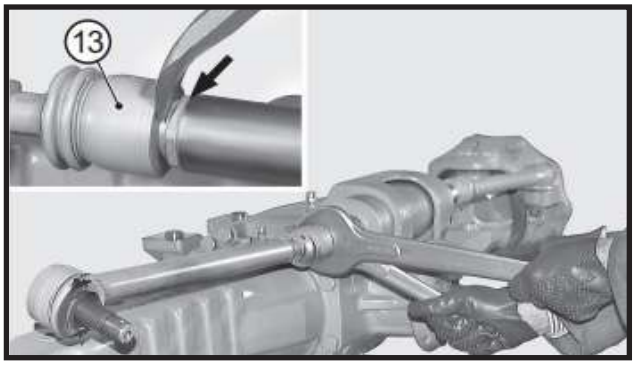

FIGURE 27: Apply Loctite 242 to the thread and connect the tie rods by screwing the terminals onto the piston stem.

CAUTION

Torque wrench setting is different based on cylinder tread dimensions and/or tie rod axial joint wrench size (see below).

M22 x 1,5 mm	50 mm	240 - 270 N·m.
Torque wrench setting:		
M27 x 1,5 mm	55 mm	380 - 420 N·m.

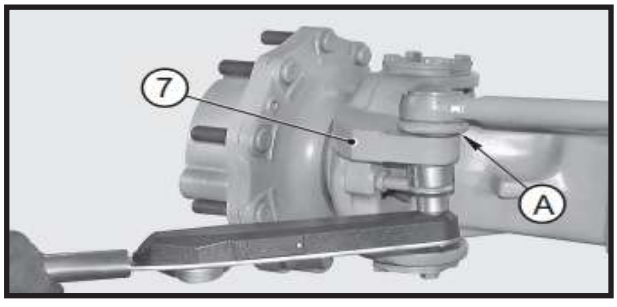

FIGURE 28: Insert the pins (**4**) in the steering knuckle (**7**) and lock into position. Torque wrench setting:

M24 x 1,5 mm	36 mm	260 - 290 N·m.
Torque wrench setting:		
M27 x 1,5 mm	41 mm	325 - 360 N·m.

CAUTION

Check that rubber guards (A) are intact.

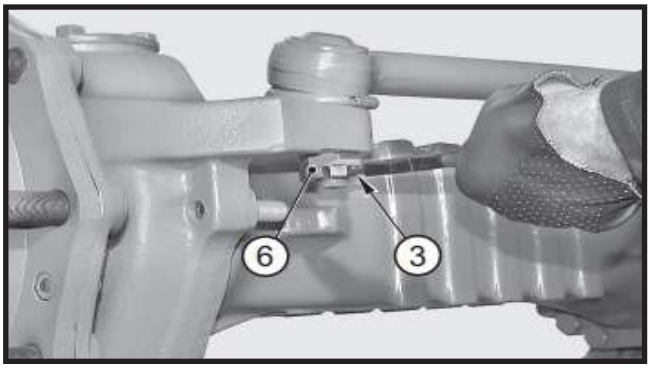

FIGURE 29: OLD VERSION COTTER PINS Tighten the nut until is find the matching hole to insert the cotter pin. Insert the cotter pins (**3**) and bend the safety stems.

CAUTION

Find the position of the notching in relation to the hole of the cotter pins and tighten the nut further.

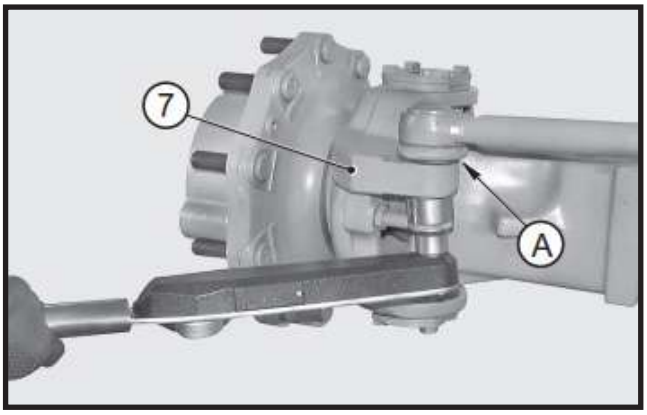

FIGURE 30: NEW VERSION SELF LOCK NUTS Insert the pins (**4**) in the steering knuckle (**7**) and lock into position using a torque wrench setting as shown in Figure 29.

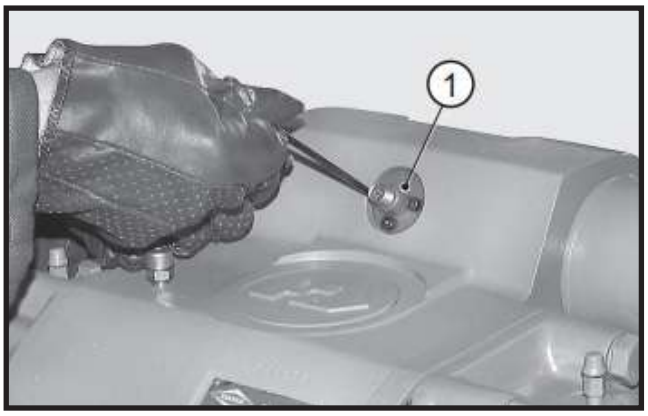

FIGURE 31: Install the centering sensor (**1**) for checking piston centering - if applicable - and tighten the screws (**10**). Torque wrench setting: 4-5 ft-lb (5 - 6 N·m).

CAUTION

Eliminate the action of the negative brake, if fitted.

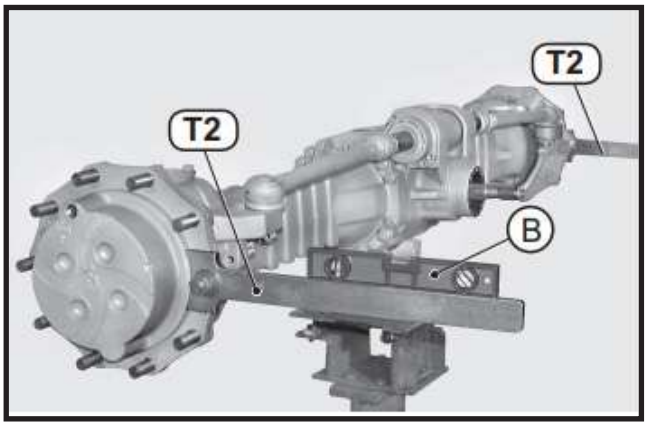

FIGURE 32: Apply tools T2 to the hubs and lock them. Using a level “B”, check that tools are perfectly flat and parallel to each other.

CAUTION

Use new cotter pins.

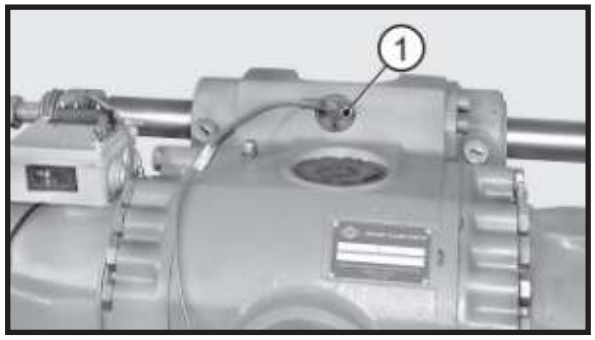

FIGURE 33: Connect the sensor (**1**) to the inspection device according to either diagram.

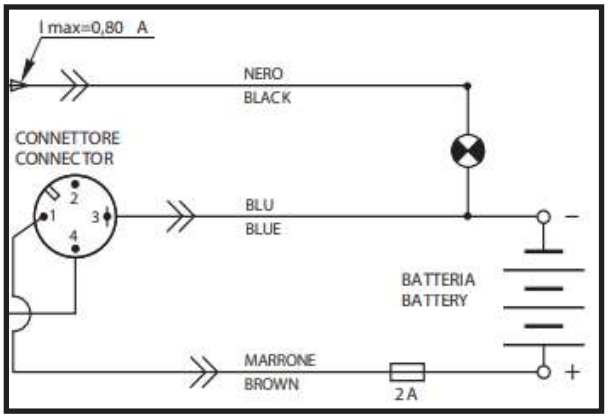

FIGURE 34: Sensor connection card, STANDARD version.

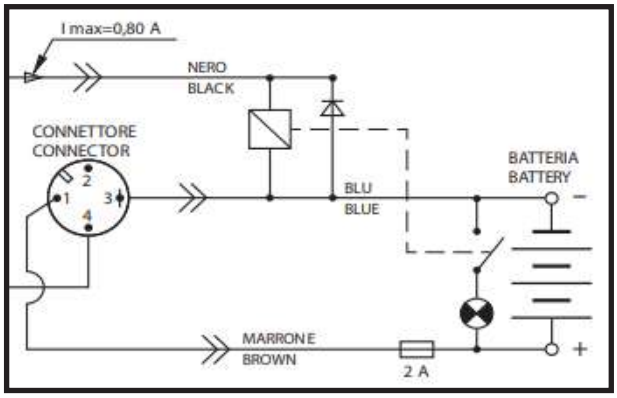

FIGURE 35: Sensor connection card, OPTIONAL version.

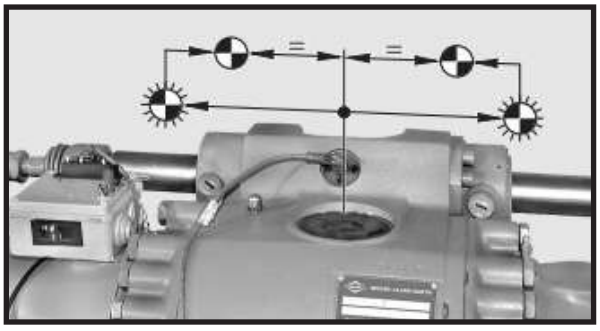

FIGURE 36: Center the piston by slowly moving it first in one direction then in the other. Position it half way on the stroke, which is determined by the switching on and off of the signal lamp of the inspection device in the reversal stage.

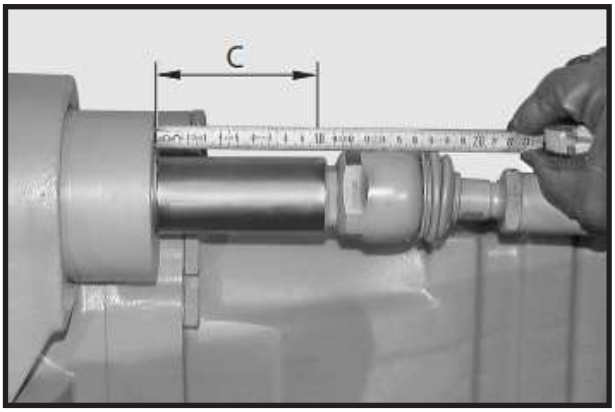

FIGURE 37: Inspect distance “C” on one side of the piston and write down the size for checking later adjustments.

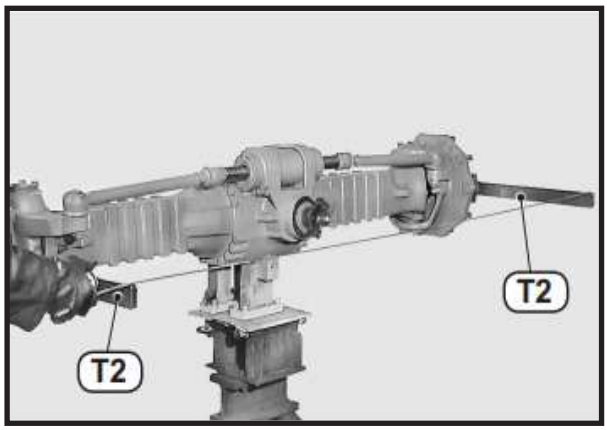

FIGURE 38: Without moving the piston, check front “B” and rear “A” using tool T1 at “R” value. R =20 in (500 mm) (see picture below).

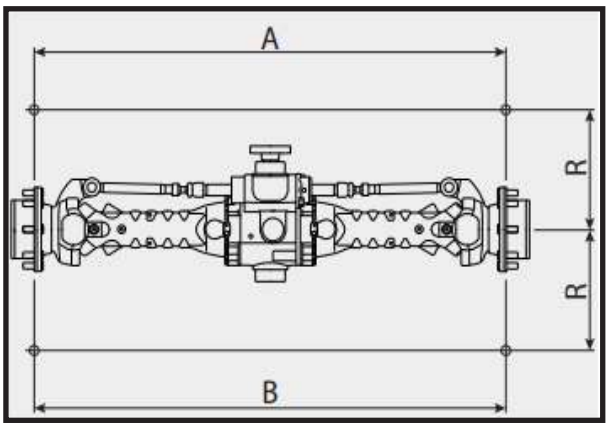

FIGURE 39: Adjust the toe-in with a difference between “A” and “B” of maximum 0,1 in (2,5 mm).

A ± B = 0,1 in (2,5 mm)

R = 20 in (500 mm)

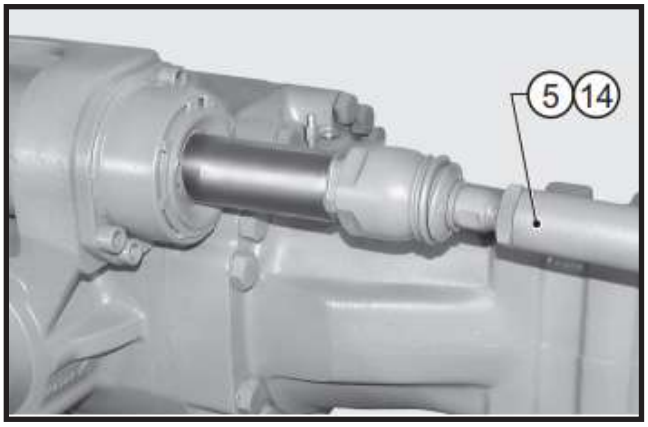

FIGURE 40: If necessary, adjust toe-in without moving the centering of the piston and adjust the length of the tie rods (**5**) or (**14**).

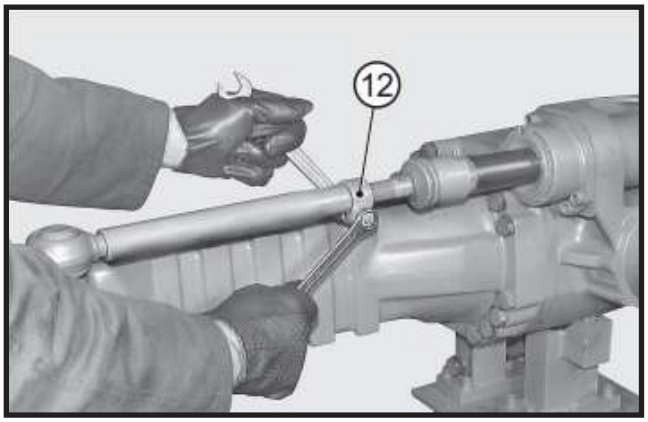

FIGURE 41: TOE-IN ADJUSTMENT ON UNITS WITH COLLAR Loosen the nuts on the collars (**12**).

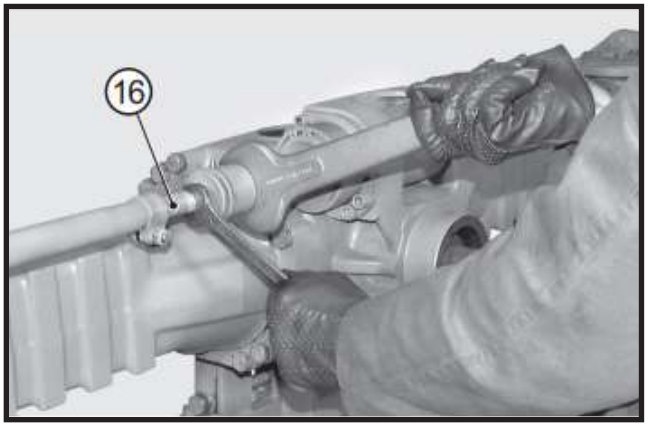

FIGURE 42: Rotate the ball-and-socket joints (**16**) until toe-in has been obtained.

Check that articulations move easily and lock the collars (**12**).

Torque wrench setting for nuts: 31-38 ft-lb (42 - 52 N·m).

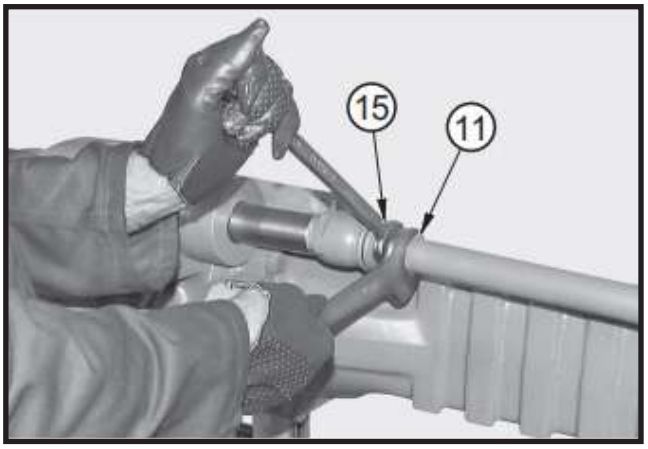

FIGURE 43: TOE-IN ADJUSTMENT ON ALTERNATIVE VERSIONS

Loosen the nuts (**11**) and screw them onto the ball-and-socket joints (**15**).

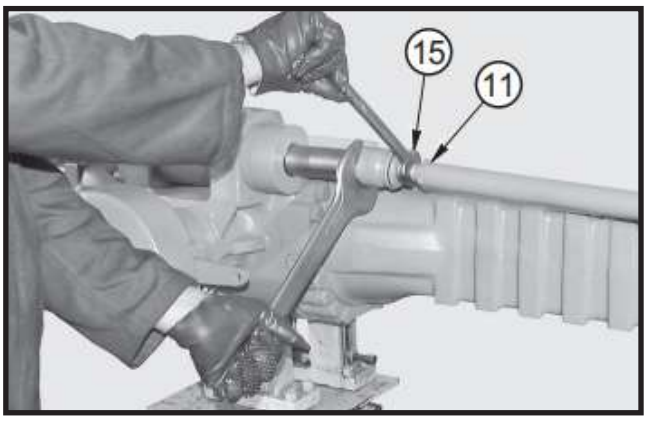

FIGURE 44: Hold the articulations still and rotate the ball and-socket joints (**15**). Once the toe-in has been adjusted, lock the nuts (**11**).

CAUTION

Torque wrench setting is different based on nut tread dimensions and/or nut wrench size (see below.

Torque wrench setting:

M24 x 1 mm	36 mm	245 - 270 N·m.
M28 x 1,5 mm	41 mm	328 - 363 N·m.

M24x1 mm	1.4 in.	181-199 ft-lb
M28x1,5 mm	1.6 in.	242-268 ft-lb

ADJUSTING THE STEERING ANGLE

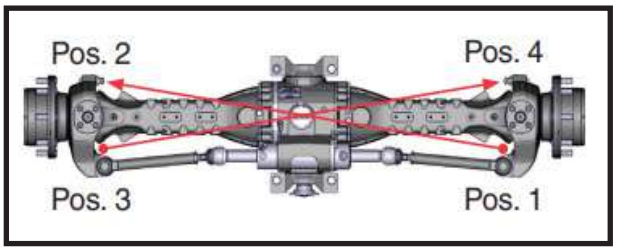

FIGURE 45: Loosen the nut of one of the adjusting screws on cylinder side.

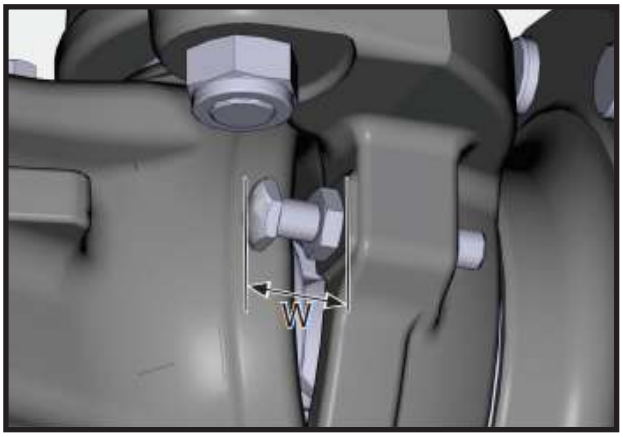

FIGURE 46: Adjust the “W” distance of the screw according to required data setting. Lock into position with nut tightened to 107-109 ft-lb (145 - 148 N·m).

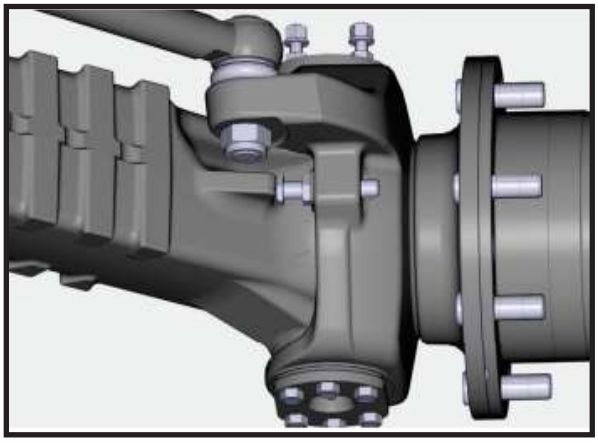

FIGURE 48: Perform one full steering operation until the adjusted screw leans against the arm stop.

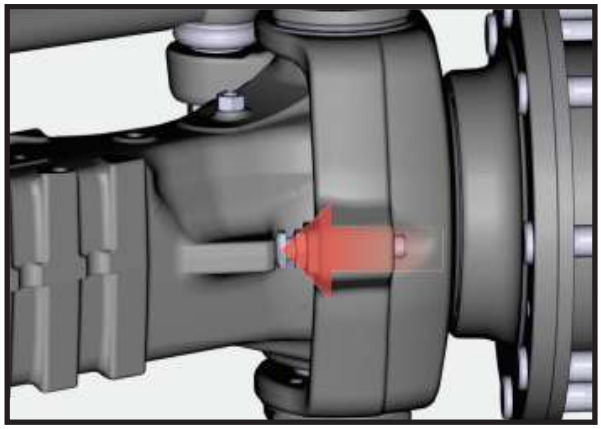

FIGURE 49: As you hold the adjusted screw in position against the arm stop, adjust the screw opposite, on noncylinder side, until it leans against the arm stop. Lock into position with nut tightened to 107-109 ft-lb (145 - 148 N·m).

CAUTION

The screws must lean against the respective arm stops all at the same time.

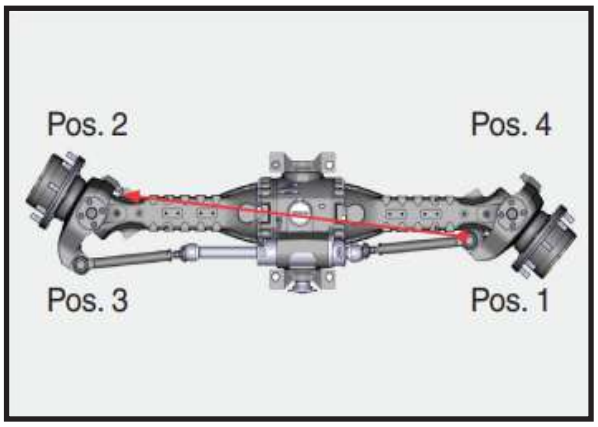

FIGURE 50: Repeat the operation on both sides.

T1

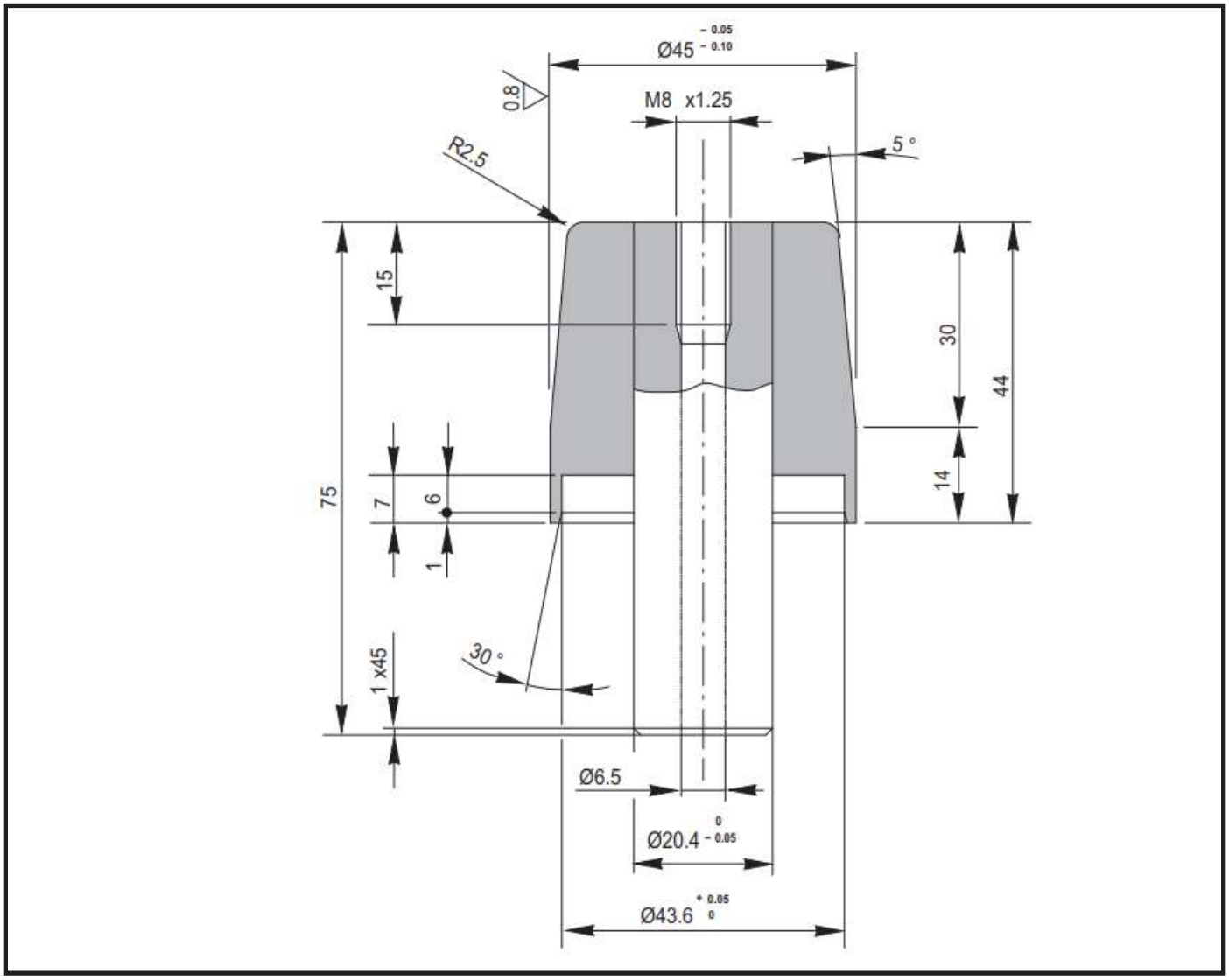
Ø45 -0.05 -0.10
0.8
M8 x1.25
R2.5
5 °
15
30
44
75
7
6
14
1
1 x45
30 °
Ø6.5
Ø20.4 0 -0.05
Ø43.6 +0.05 0

T2

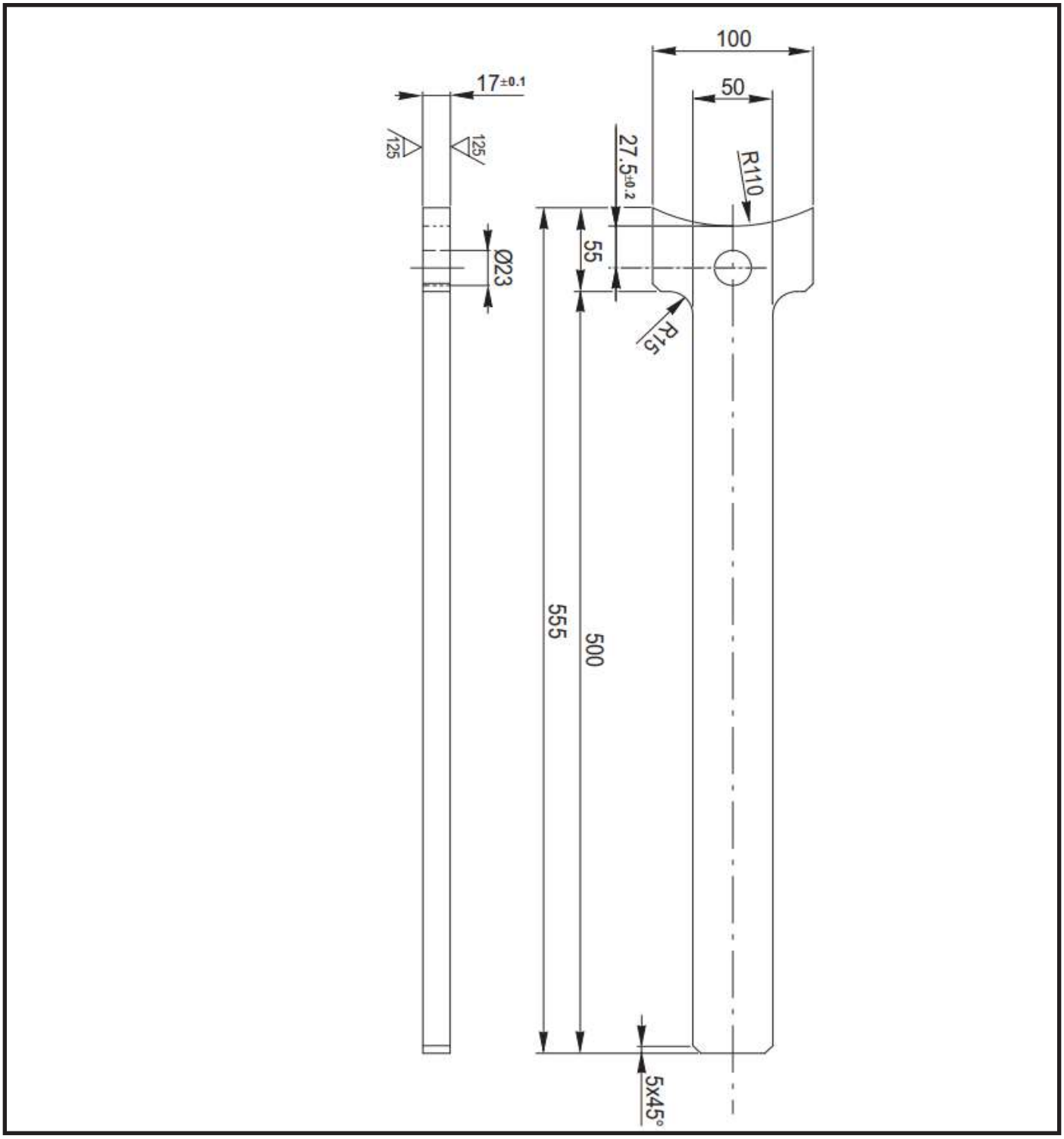

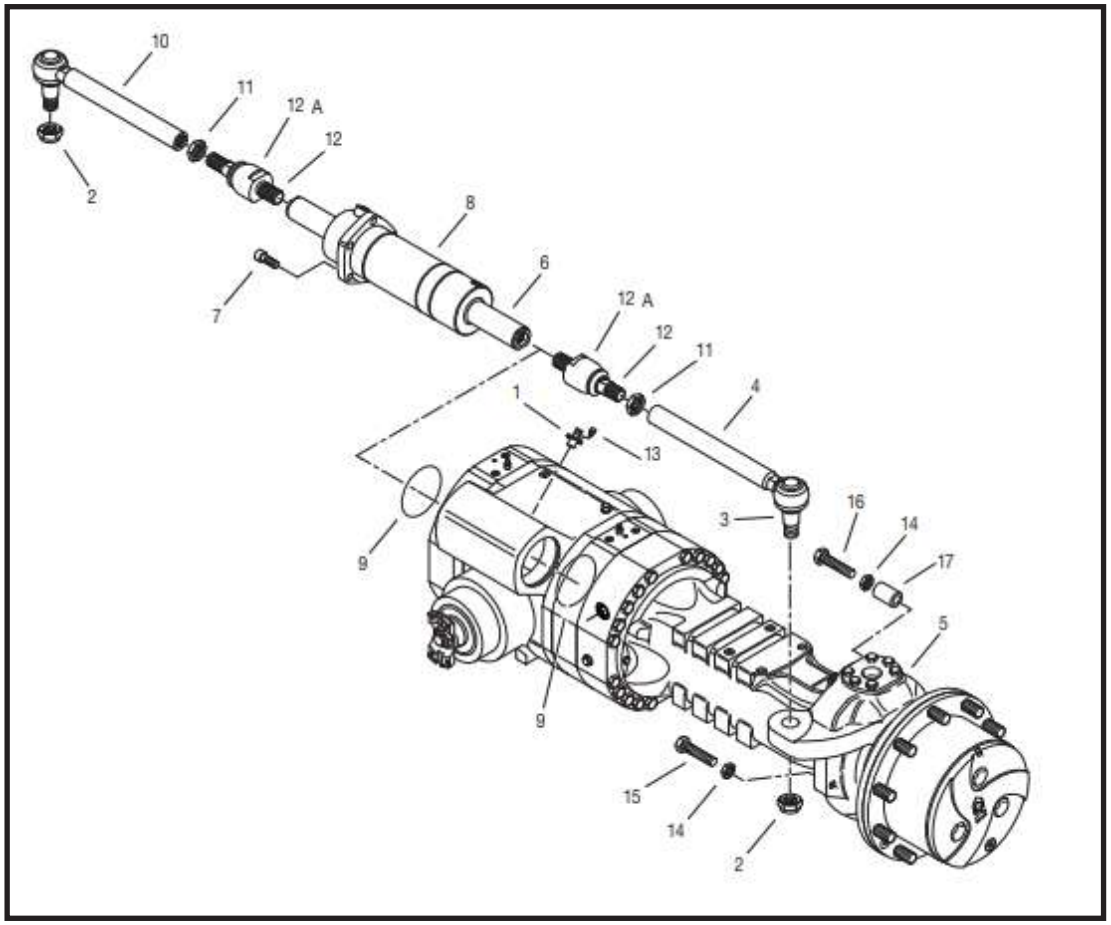
10
11
12 A
12
2
8
6
7
12 A
12
11
4
1
13
3
16
14
17
9
5
9
15
14
2

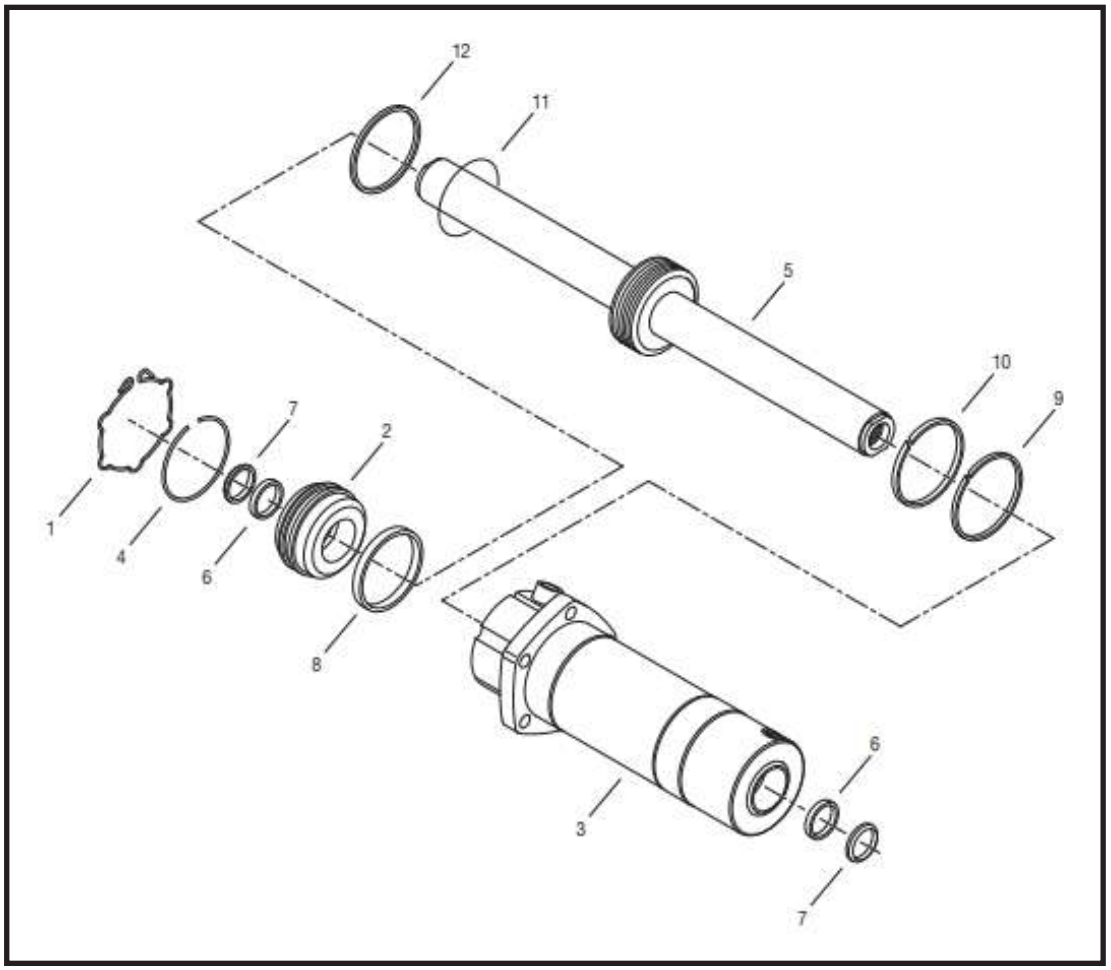
12
11
5
10
9
7
2
1
4
6
8
6
3
7

Disassembly

CAUTION

Before draining oil, release the internal pressure.

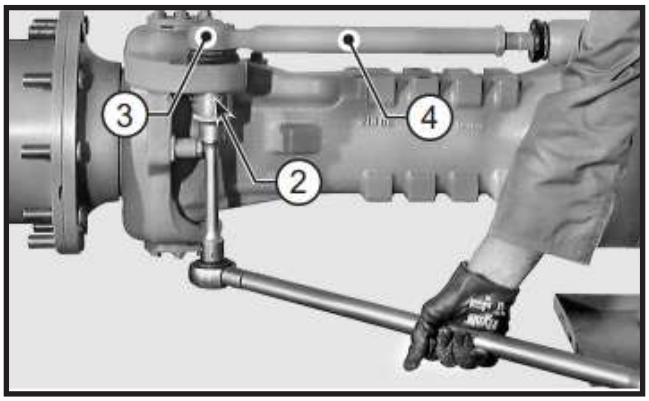

FIGURE 1: Loosen the check nuts (**2**) on the joints (**3**) of the steering bars (**4**). Remove nuts.

CAUTION

The self-locking nuts (**2**) must be replaced once every 5 disassemblies.

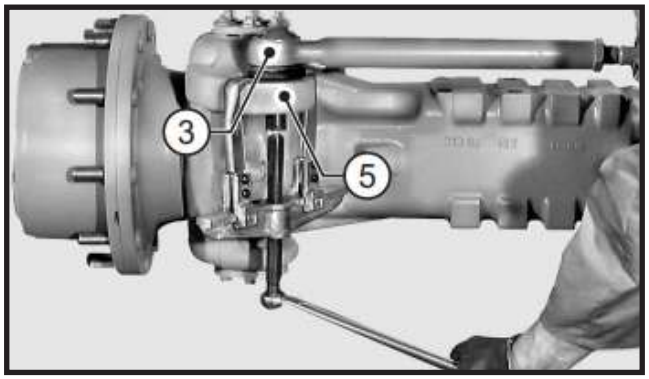

FIGURE 2: Using a puller, disconnect the tapered pins of the joints (**3**) from the steering knuckles (**5**).

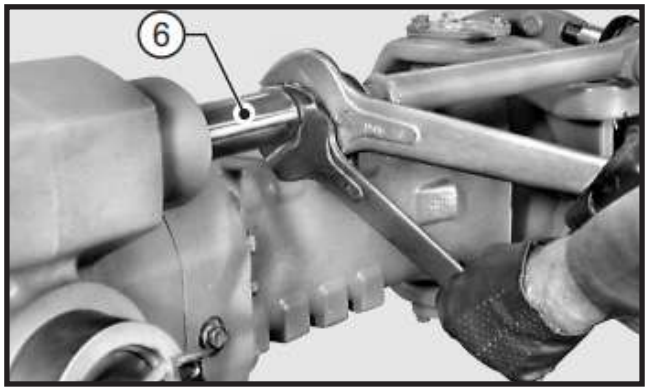

FIGURE 3: Disconnect left and right steering bars from piston (**6**).

FIGURE 4: Loosen and remove the steering cylinder (**8**) screws (**7**).

Extract the steering cylinder (**8**) using a plastic hammer.

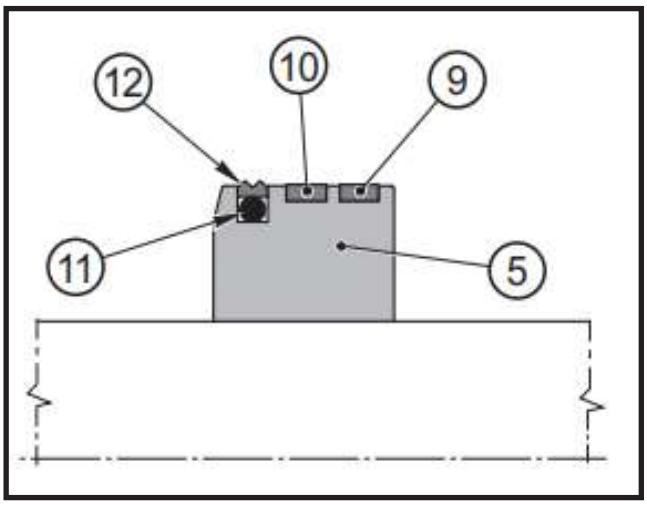

FIGURE 5: Before attempting to disassemble the unit, drain the oil in the cylinder chambers completely. Using a screwdriver, remove the snap ring (**1**) of the cylinder head (**2**).

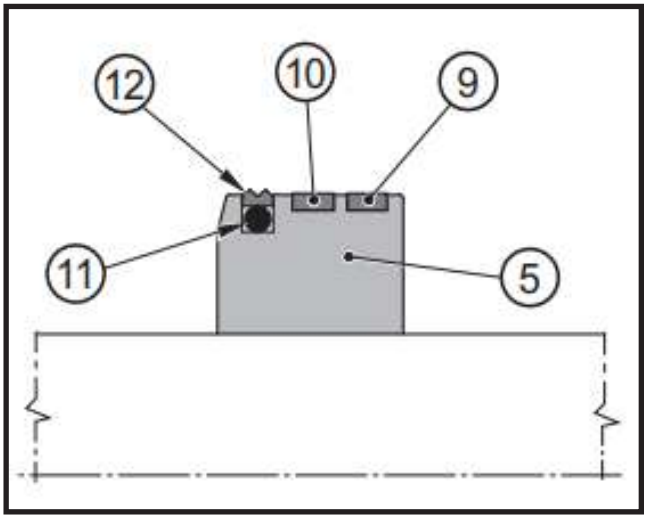

FIGURE 6: Lightly tap the cylinder head (**2**) with a plastic hammer to push it inside the cylinder (**3**).

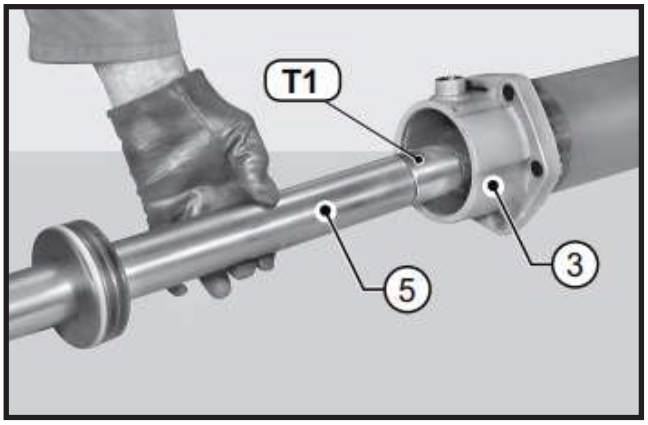

FIGURE 7: Using a punch, force the stop ring (**4**) located inside the cylinder (**3**) and extract ring using a screwdriver.

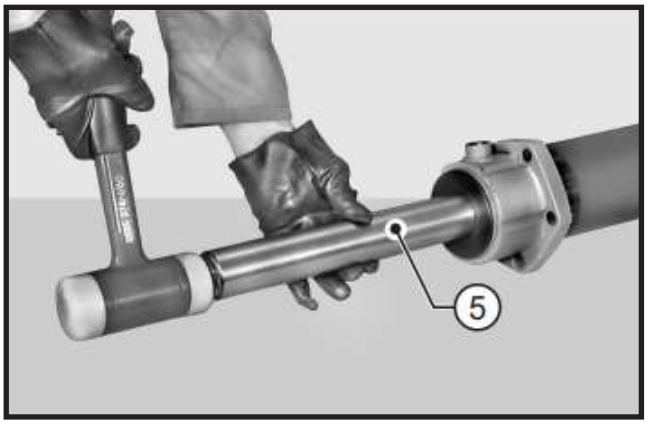

FIGURE 8: Using a plastic hammer, hammer the piston (**5**) so it strikes against the head (**2**). Continue until the head (**2**) is ejected from the cylinder (**3**).

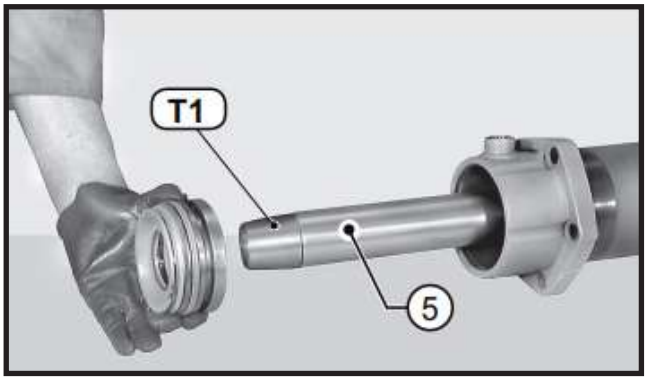

FIGURE 9: Take the cylinder unit (**3**) apart by extracting the head (**2**) first, followed by the piston (**5**).

i	CAUTION

Write down direction of installation of piston whose seal ring “A” is oriented towards cylinder head (2).

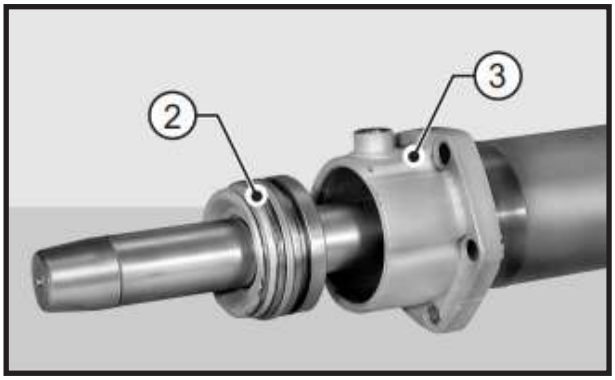

FIGURE 10: Remove all seals, anti-extrusion rings, and scraper rings from head (**2**), cylinder (**3**) and piston.

i	CAUTION

1- For easy installation, lubricate with grease.

2- If a centering sensor is not required, the magnetic ring (**10**) can be replaced with an additional guide ring (**9**).

Assembly

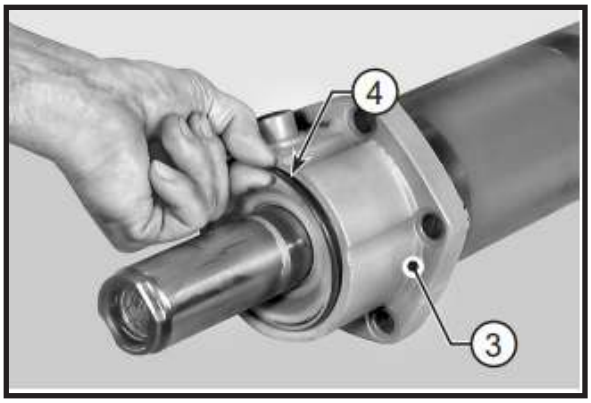

FIGURE 11: Grease and install the piston rod seal ring (**6**) and scraper ring (**7**) into cylinder (**3**).

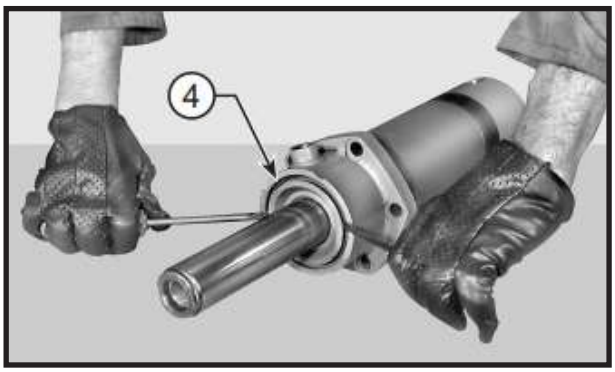

FIGURE 12: Grease and install the piston rod seal ring (**6**) and scraper ring (**7**) into the head (**2**).

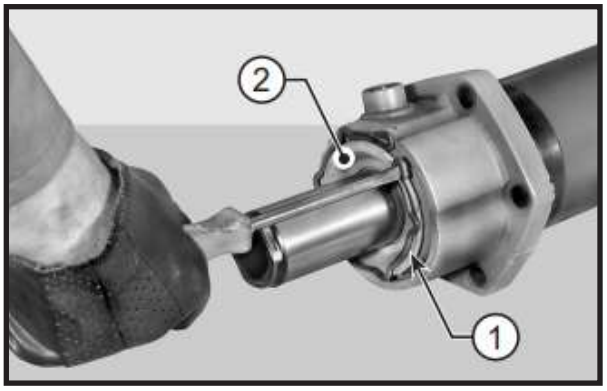

FIGURE 13: Prepare piston (**5**) by fitting it with guide ring (**9**), magnetic ring (**10**), o-ring (**11**), and seal (**12**).

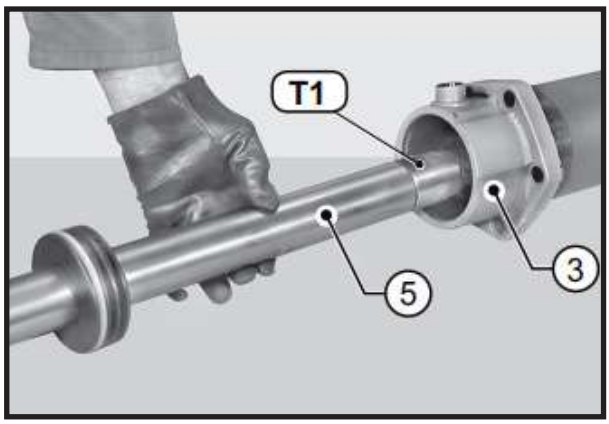

FIGURE 14: Apply tool T1 to the piston rod on non-head side (**2**) and center rod into cylinder (**3**) so as to fit it into piston (**5**).

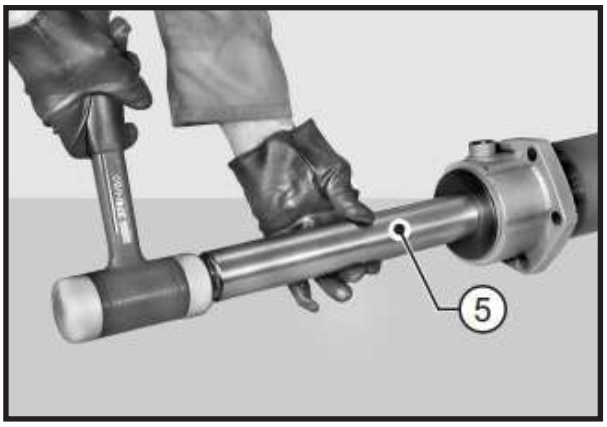

FIGURE 15: Introduce the piston (**5**) into the cylinder by approximately 6 in (150 mm) using a plastic hammer.

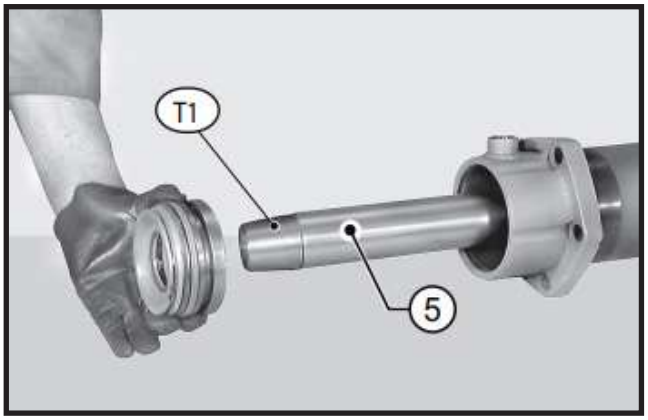

FIGURE 16: Remove tool T1 and apply it to the opposite side of the piston (**5**).

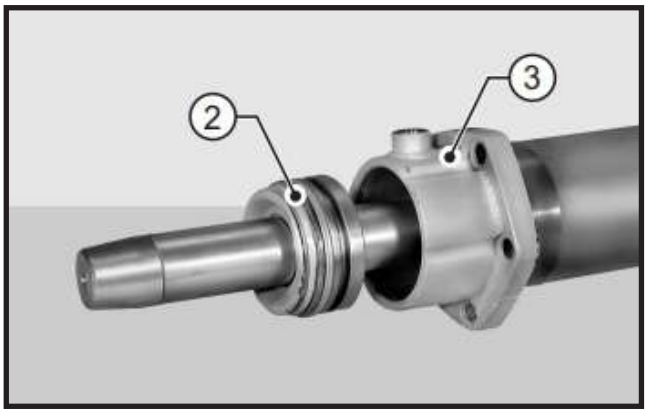

FIGURE 17: Grease the seals of the head (**2**), slip the head onto the piston and, using a plastic hammer, introduce head into cylinder (**3**).

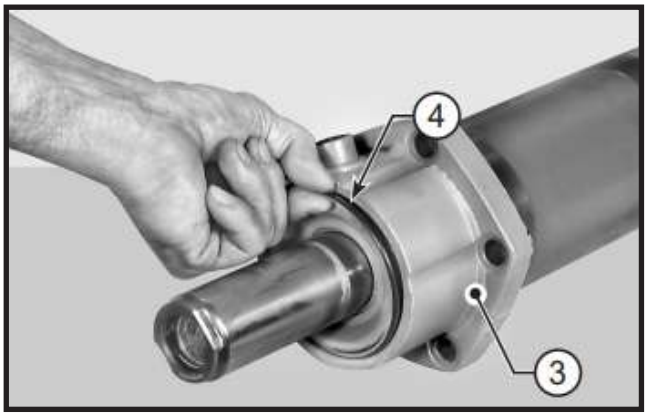

FIGURE 18: Introduce the stop ring (**4**) and ensure that it sets in the seat of cylinder (**3**).

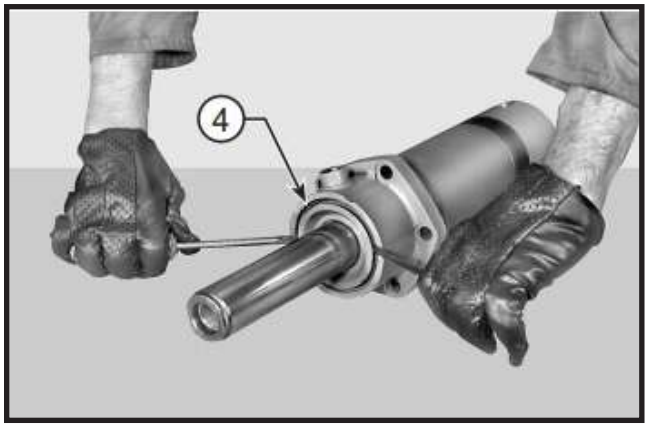

FIGURE 19: Using two screwdrivers or levers, force the head until it is seated against the stop ring (**4**).

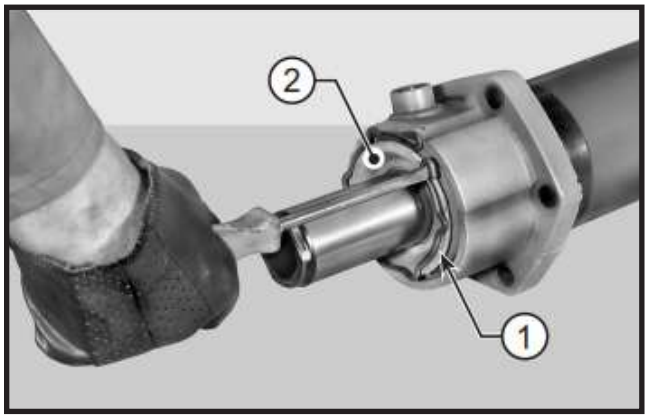

FIGURE 20: Fit the snap ring (**1**) on the head (**2**). If necessary, force it into the seat with a punch and hammer.

CAUTION

Make sure that the snap ring (**1**) fits snugly in its seat.

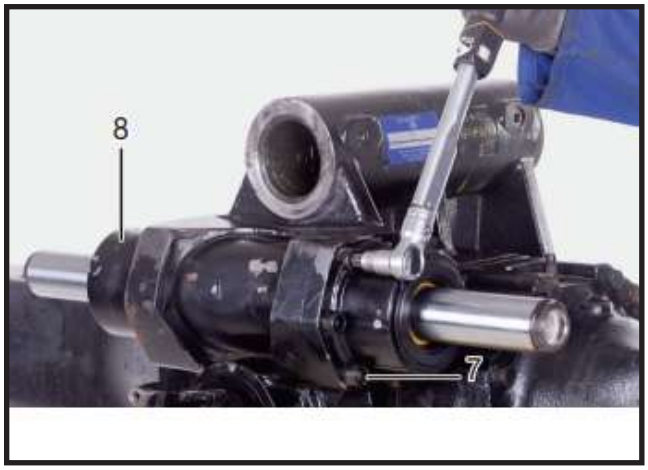

FIGURE 21: Check the condition of the axle unit's o-rings (**9**). Grease piston seats with Tecnolube Seal 101 and install cylinder using a plastic hammer. Block cylinder (**8**) with screws (**7**) coated with Loctite 242 and tightened to a torque of 133-147 ft-lb (180 - 200 N·m).

FIGURE 22: Apply Loctite to the threaded portion of the steering bars and connect the bars by tightening the ends in the piston rod.

Tightening torque: 317-347 ft-lb (430 - 470 N·m).

CAUTION

Accurately remove grease from the threads using an activator before applying the thread locking compo.

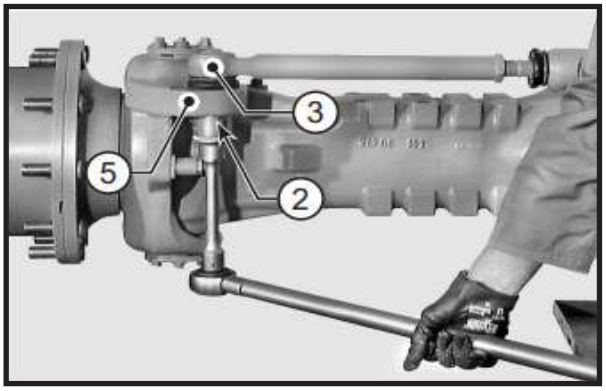

FIGURE 23: Introduce the pins (**3**) in the steering knuckles (**5**) and lock into position with nuts (**2**) tightened to a torque of 258-288 ft-lb (350 - 390 N·m).

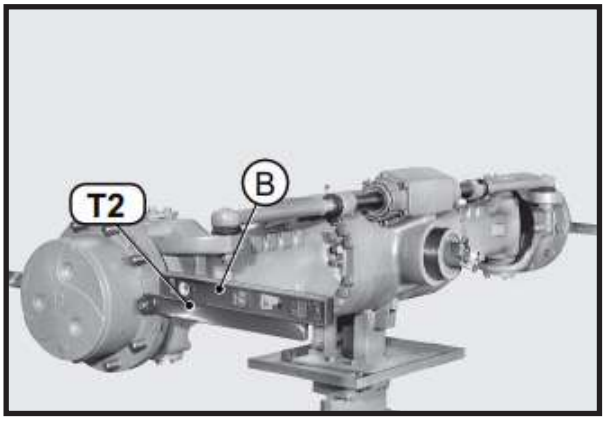

FIGURE 24: Apply tools T2 onto the wheel hubs and lock tools. Check that tools are perfectly flat and parallel to each other using a level "B".

CAUTION

If required, eliminate the action of the negative brake.

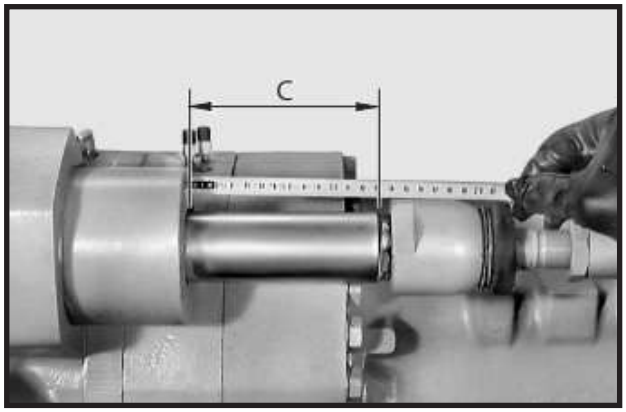

FIGURE 25: Check distance “C” of piston on either of the two sides and write down distance dimension to check subsequent adjustments.

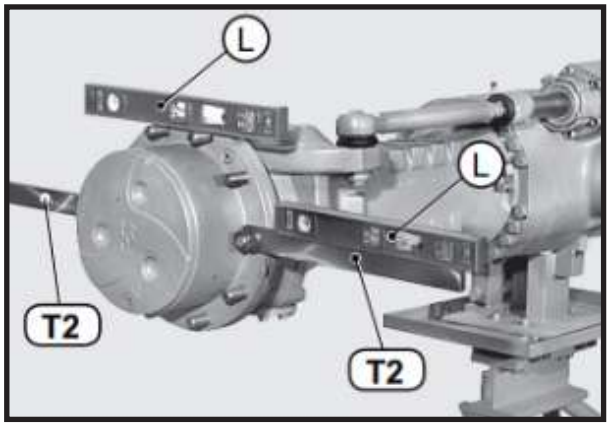

FIGURE 26: Lay level “L” on two upper studs and line them up. Apply tools T2 to the two horizontal studs; hold them in position with two nuts, level them, and finally lock into position.

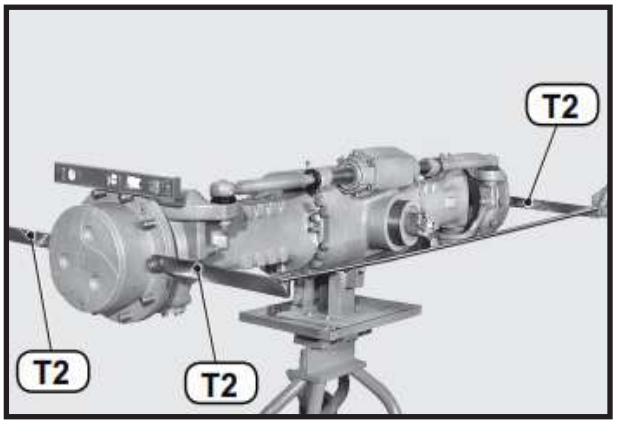

FIGURE 27: Without moving the piston, check front “B” and rear “A” using tool T1 at “R” value. R = 20 in (500 mm) (see picture below).

FIGURE 28: Adjust the toe-in with a difference between “A” and “B” of maximum 0,1 in (2,5 mm). A ± B = 2,5 mm R = 20 in (500 mm).

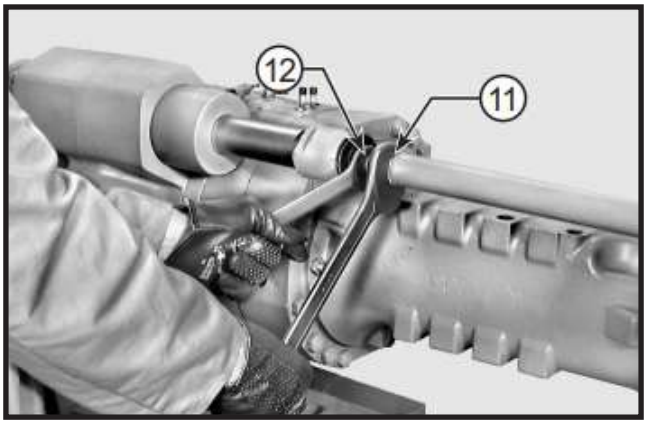

FIGURE 29: TOE-IN If necessary, adjust alignment after loosening the check nuts (**11**) of ball pins (**12**).

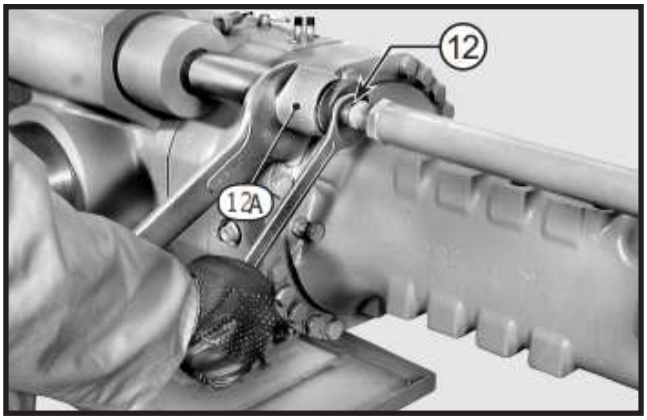

FIGURE 30: Hold joints (12A) tight and rotate the ball pins (**12**) until tools T2 become parallel to each other.

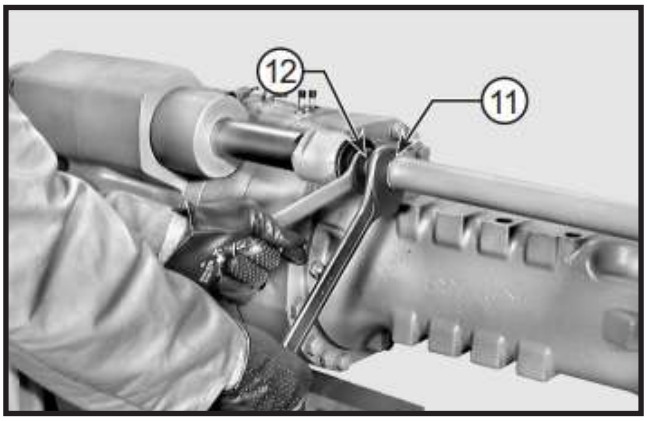

FIGURE 31: Once toe-in has been adjusted, lock nuts (**11**). Tightening torque for nuts: 242-268 ft-lb (328 - 363 N·m).

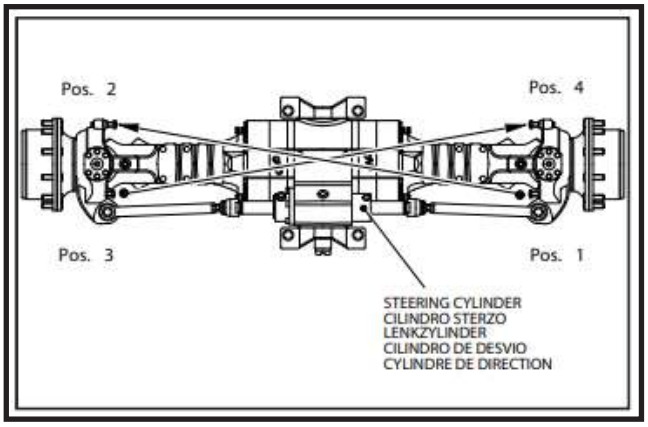

FIGURE 32: ADJUSTING THE STEERING ANGLE Loosen the nut of one of the adjusting screws on cylinder side.

STEERING ANGLE		43°	45°	35°	55°	40°	50°
DISTANCE	"B" (mm)	58.5	53.5	51.6	23.8	36.6	38.2

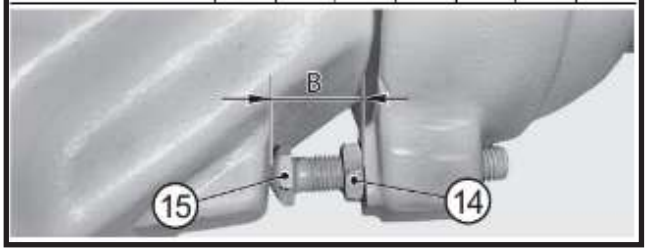

FIGURE 33: Adjust the jutting portion of the screw (**15**) according to data shown in the table. Lock into position with nut (**14**) tightened to 107-109 ft-lb (145 - 148 N·m).

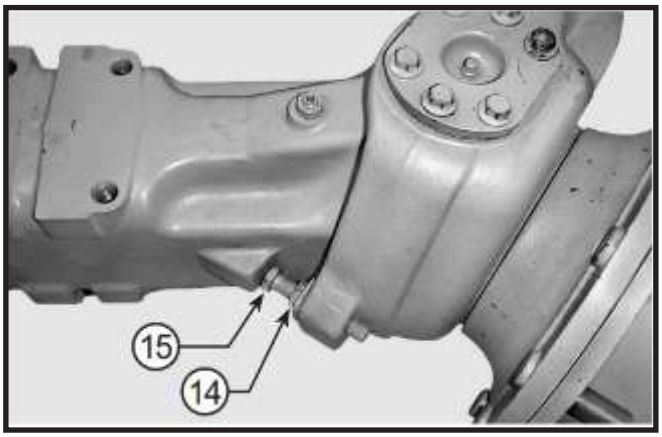

FIGURE 34: Perform one full steering operation until the adjusted screw (**15**) leans against the arm stop.

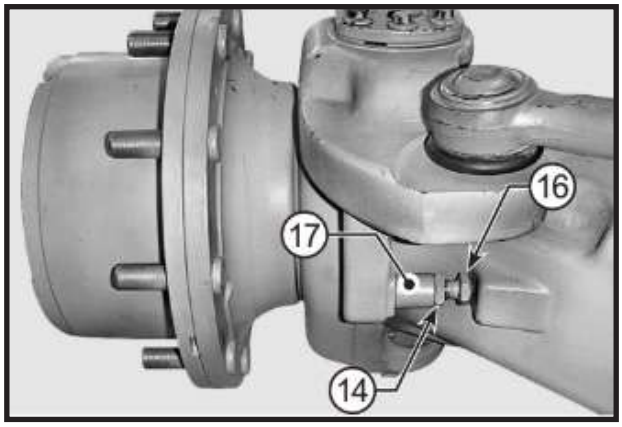

FIGURE 35: While holding the adjustment screw in position against the arm stop, adjust the screw opposite (**16**), on noncylinder side, until it leans against the arm stop.

CAUTION

The screws (**15, 16**) must lean against the respective arm stops all at the same time.

SPECIAL TOOLS

T1

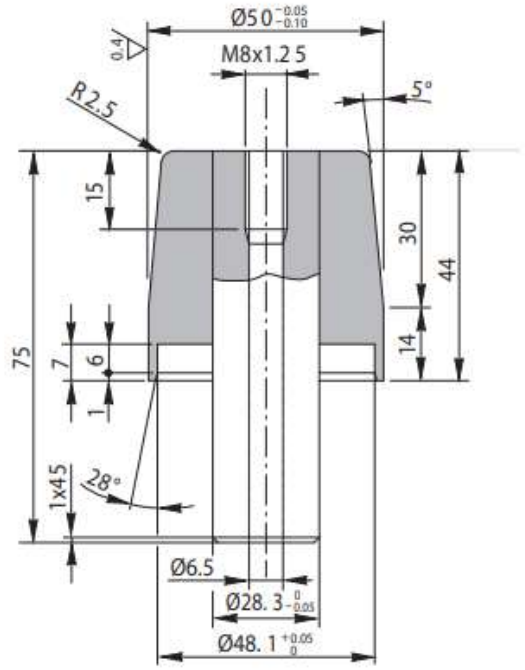

T2

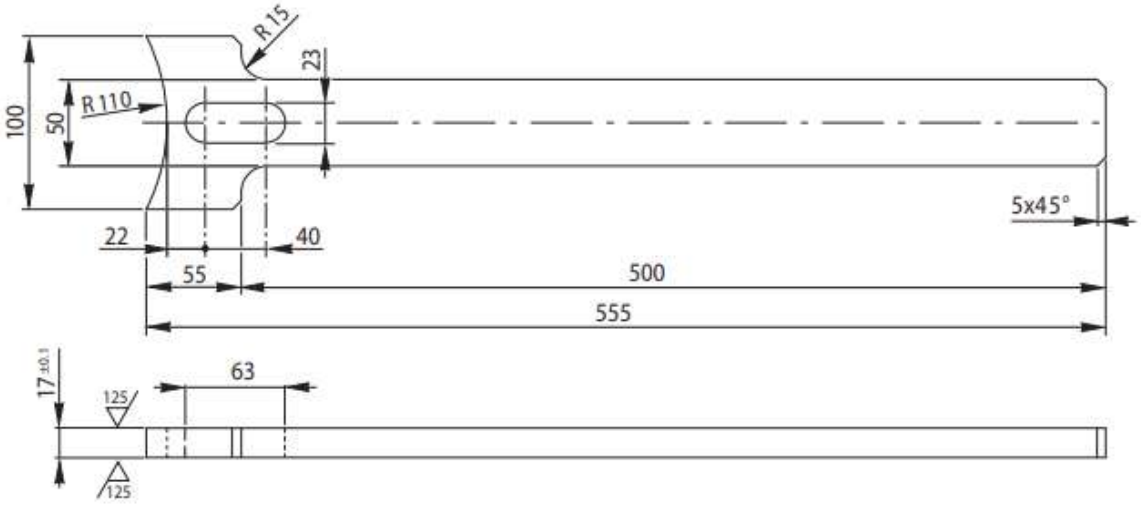

DIFFERENTIAL UNIT

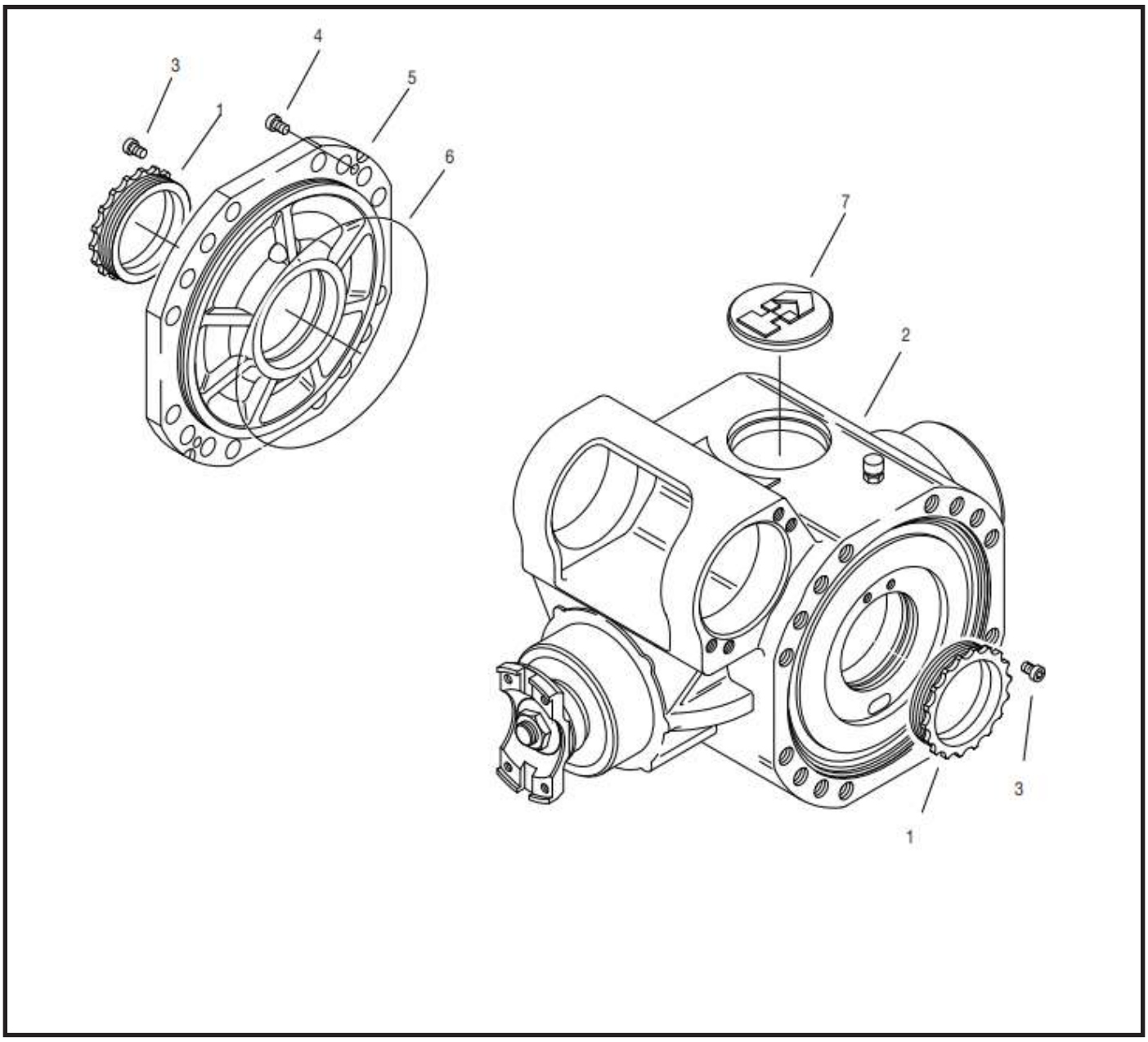

Disassembly

CAUTION

Before draining oil, release the internal pressure.

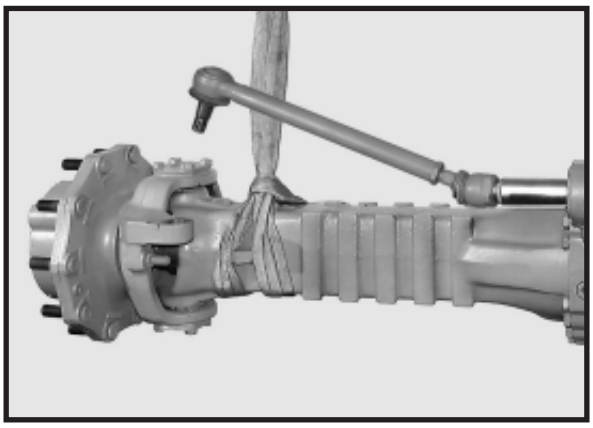

FIGURE 1: Remove the complete arms.

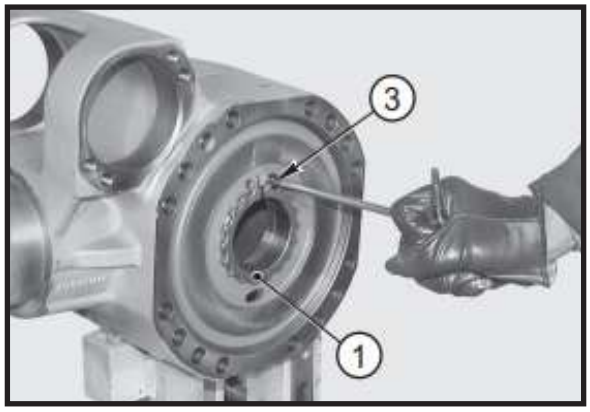

FIGURE 2: Mark the position of the ring nuts (**1**). Remove the capscrews (**3**) from the ring nuts (**1**).

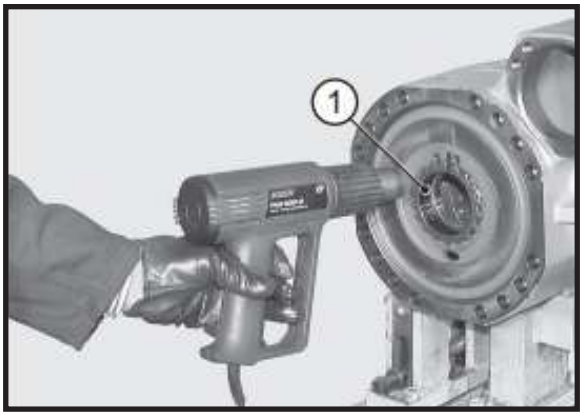

FIGURE 3: Uniformly heat the ring nuts (**1**) up to a temperature of 80° C.

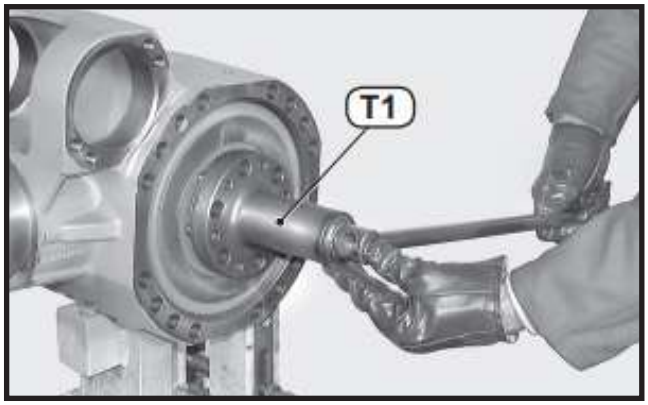

FIGURE 4: Apply tool T1 and remove the ring nuts.

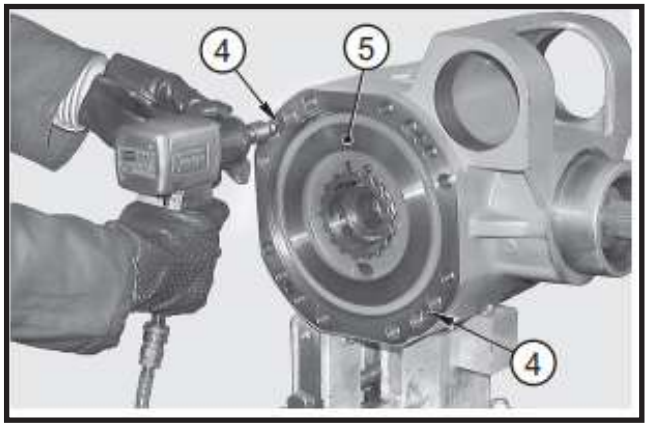

FIGURE 5: Remove the capscrews (**4**) from the middle cover (**5**).

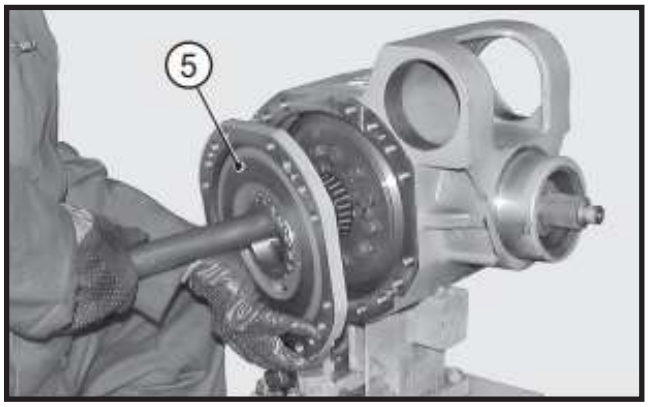

FIGURE 6: Insert a screwdriver in the opposing slots then force and remove the middle cover (**5**) and the complete differential unit.

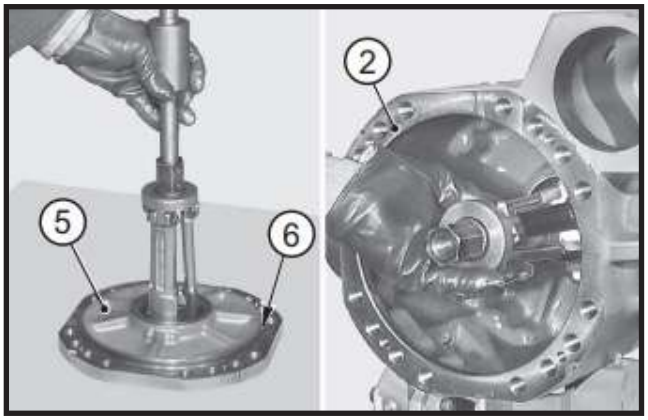

FIGURE 7: If the bearings need replacing, extract the external thrust blocks of the bearings (**7, 8**) from middle cover and central housing.

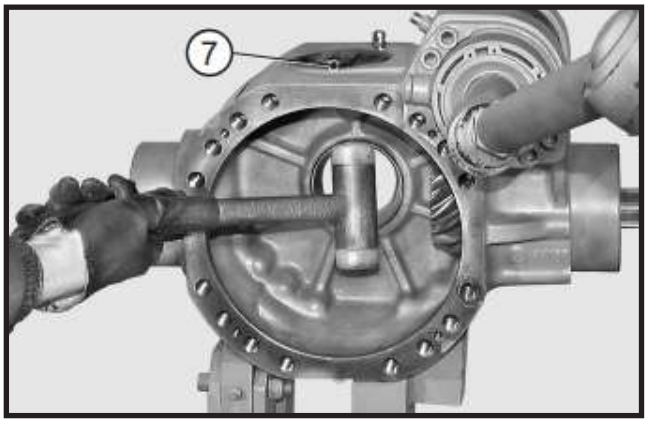

FIGURE 8: Remove the top plug (**7**).

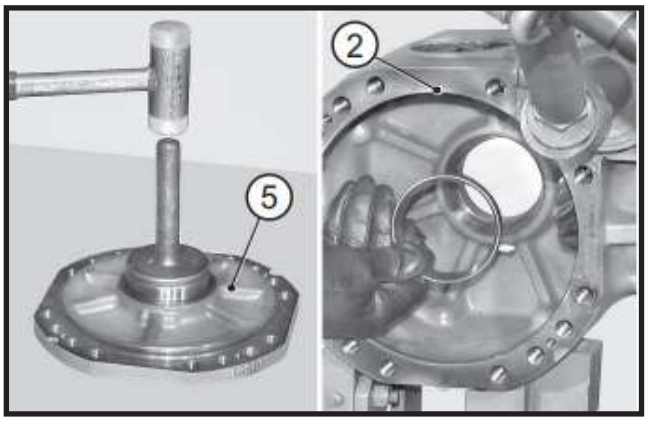

FIGURE 9: If the bearings are replaced, insert the external thrust blocks in the middle cover (**5**) and in the central housing (**2**).

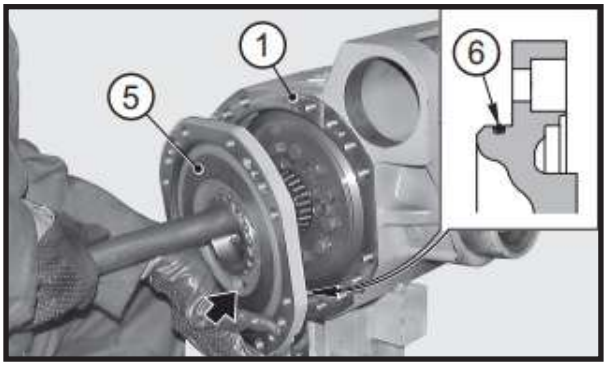

FIGURE 10: Position the differential unit in the central housing (**2**) using a bar and fit the middle cover (**5**).

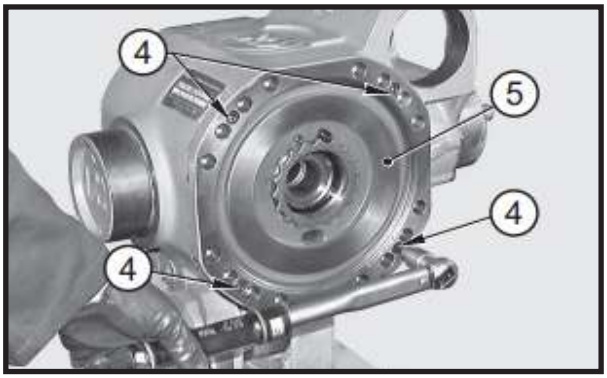

FIGURE 11: Lock the middle cover (**5**) with screws (**4**). Torque wrench setting for screw: 17-19 ft-lb (23.8 - 26.2 N·m).

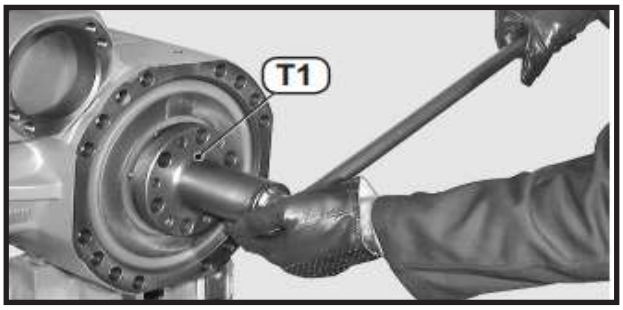

FIGURE 12: Tighten ring nuts on the ring gear side until clearance between pinion and ring gear is zero, then lock the ring gear; go back 1/4 - 1/2 turn.

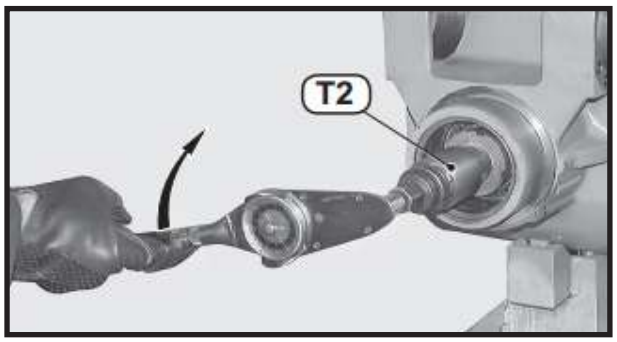

FIGURE 13: Pre-set the bearings by means of the ring nut situated on the opposite side of the ring gear, so as to increase pinion torque up to 140 - 210 N·cm.

CAUTION

If bearings are not new, check the static torque; if bearings are new, check the continuous torque.

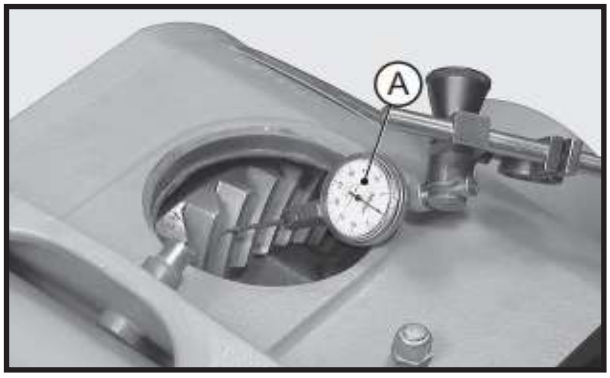

FIGURE 14: Introduce a dial indicator with rotary key “A” through the top plug hole (**7**). Position the dial indicator on the center of one of the teeth of the crown, pre-set it to 0,04 in (1 mm) and reset it.

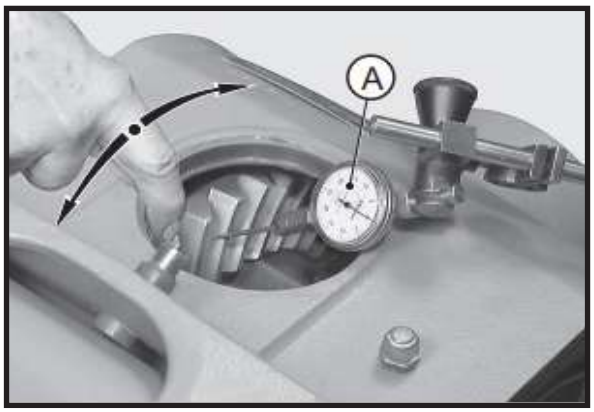

FIGURE 15: Manually move the crown in both directions in order to check the existing backlash between the pinion and the crown.

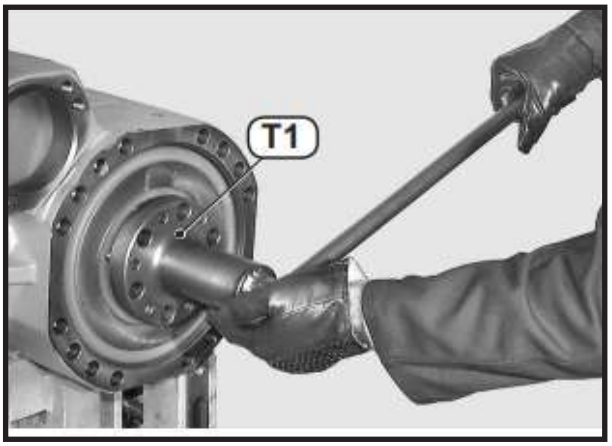

FIGURE 16: Adjust the backlash between the pinion and the ring gear by loosening one of the ring nuts (**1**) and tightening the opposite to compensate

FIGURE 17: Install a dial gauge as shown and shift the flange to check the tolerance between the bevel gear teeth.

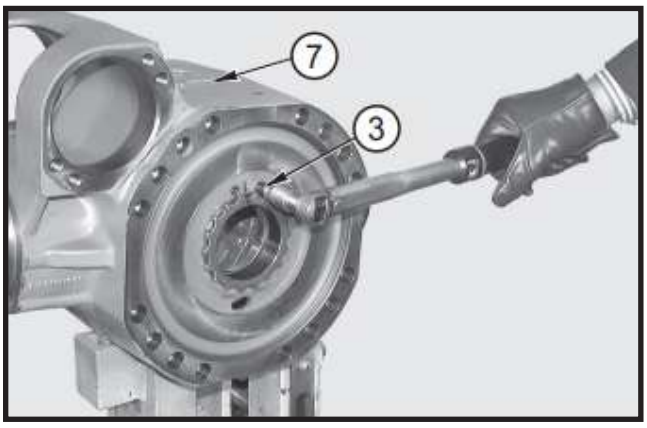

FIGURE 18: Apply Loctite 242 to the screws (**3**), fit them into one of the two holes and tighten. Torque wrench setting: 17-19 ft-lb (23.8 - 26.2 N·m). Fit the top plug (**7**) after applying repositionable jointing compound for seals to the rims.

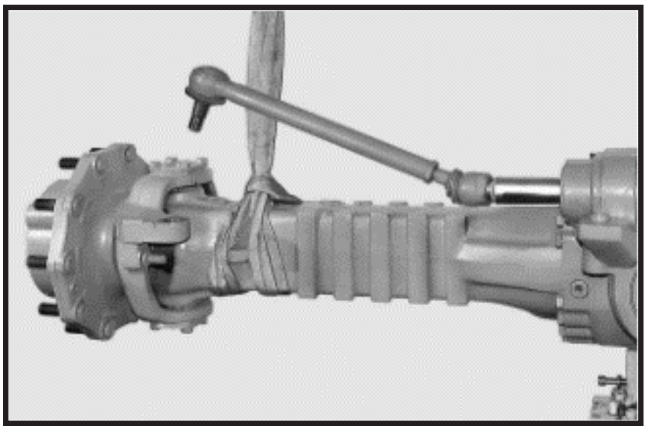

FIGURE 19: Re-install the complete arms

SPECIAL TOOLS

T1

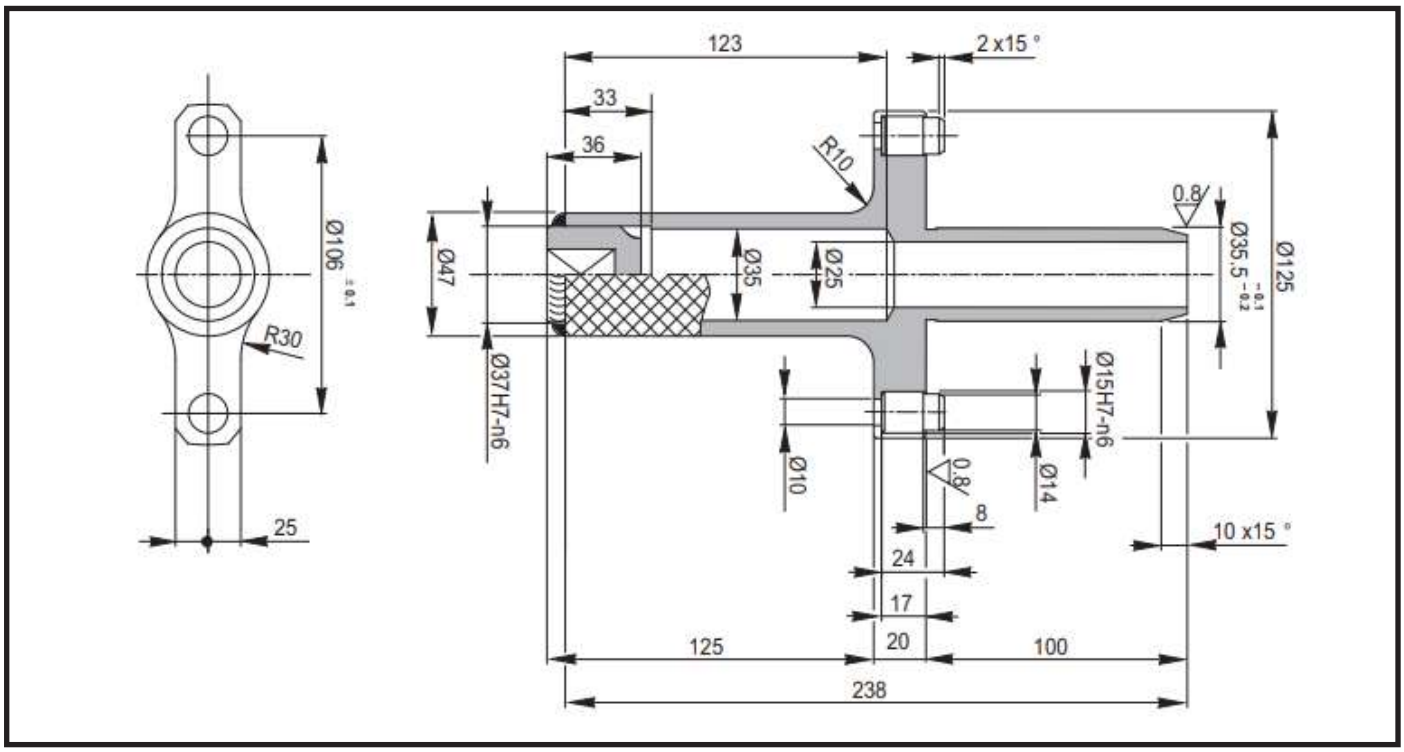

T2

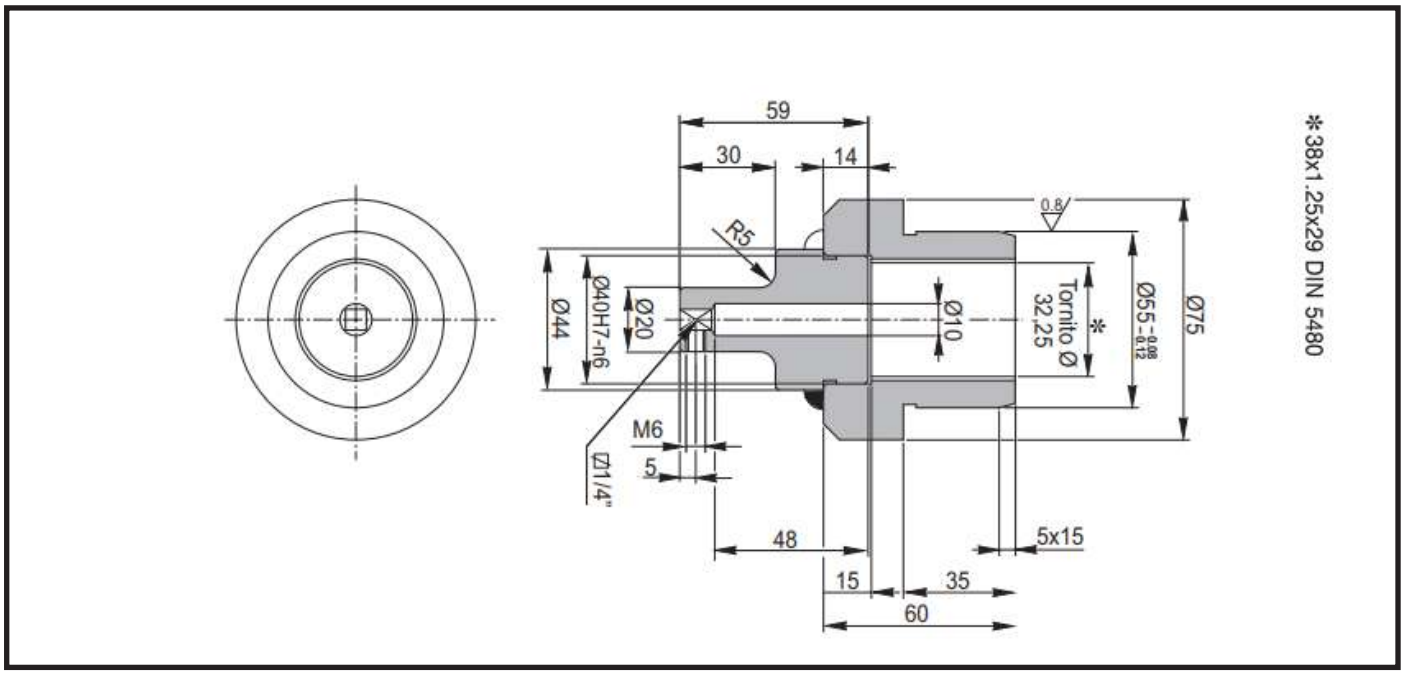

T3

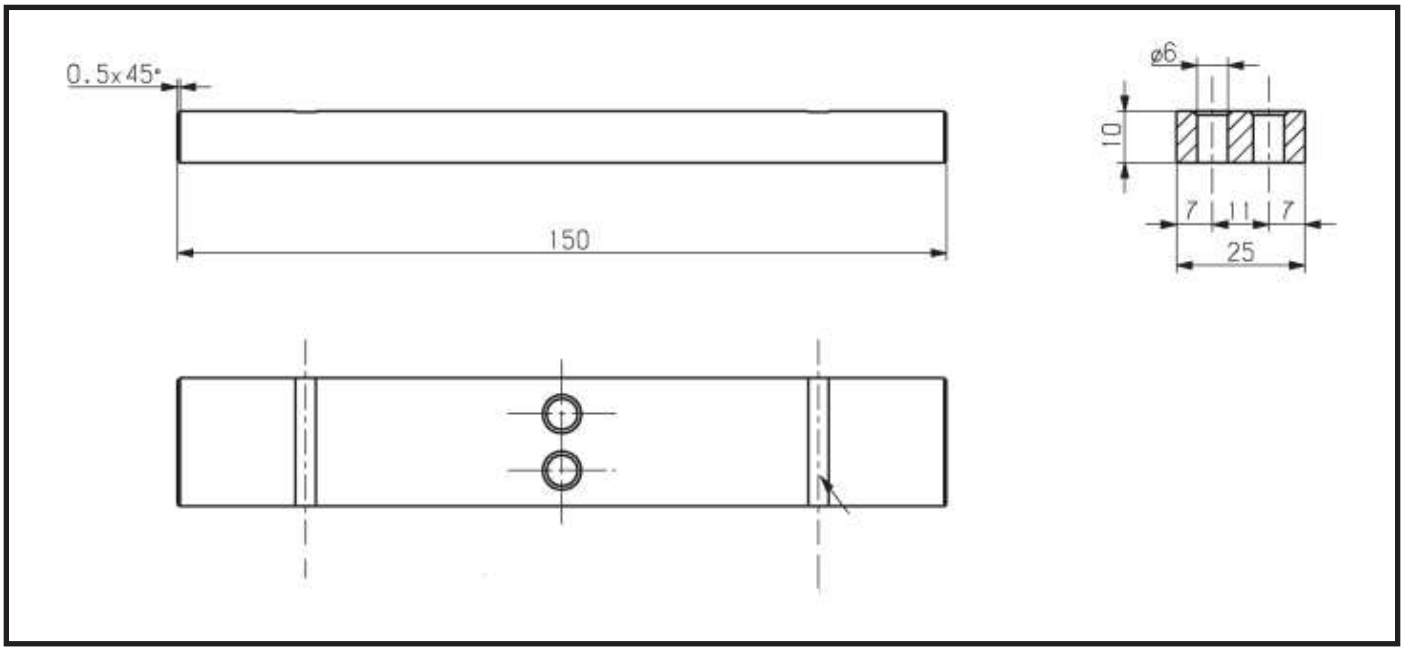
0.5x45°
150
ø6
10
7
11
7
25

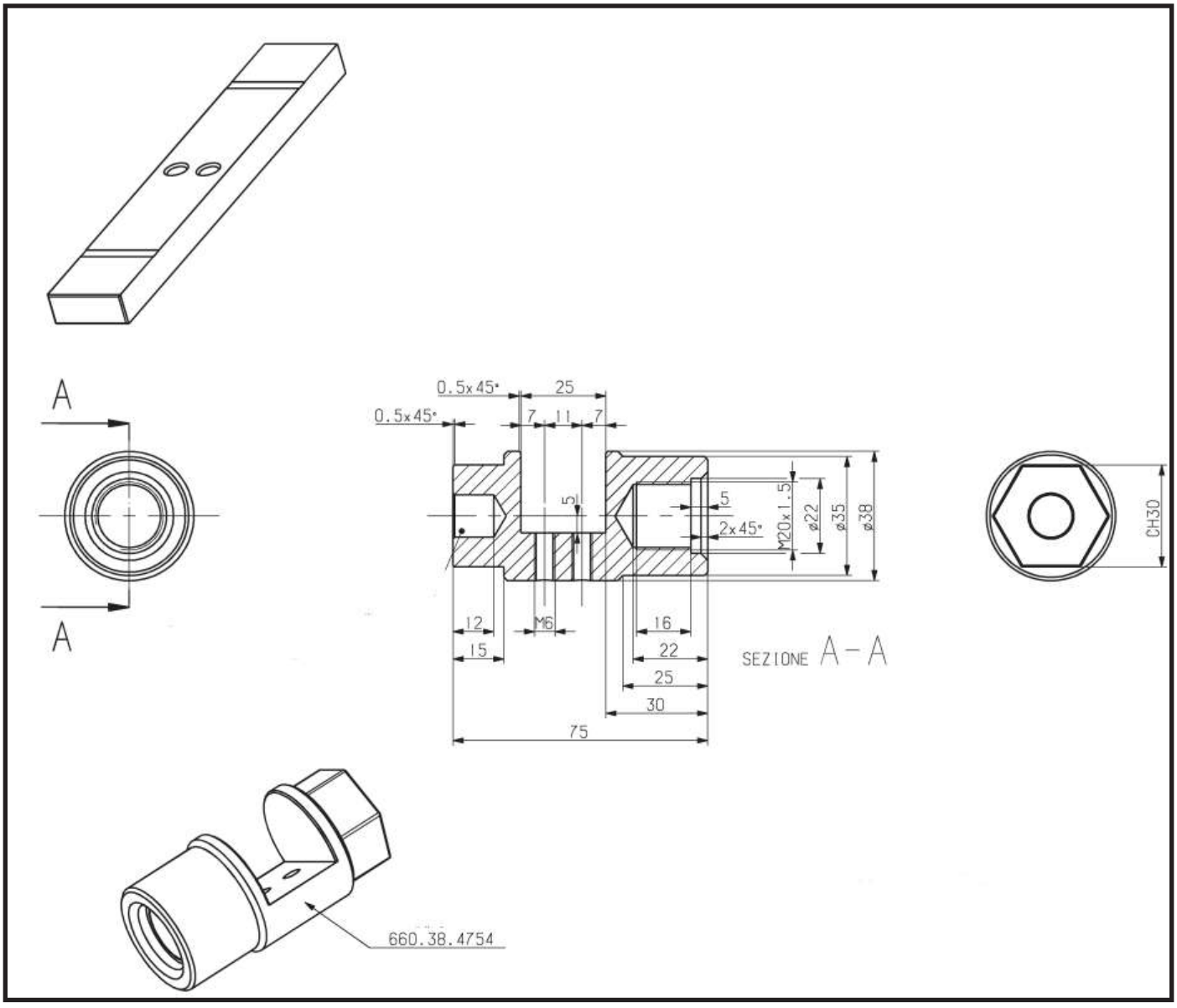
A
A
0.5x45°
0.5x45°
25
7
11
7
5
5
2x45°
M20x1.5
ø22
ø35
ø38
12
15
M6
16
22
25
30
75
SEZIONE A-A
CH30
660.38.4754

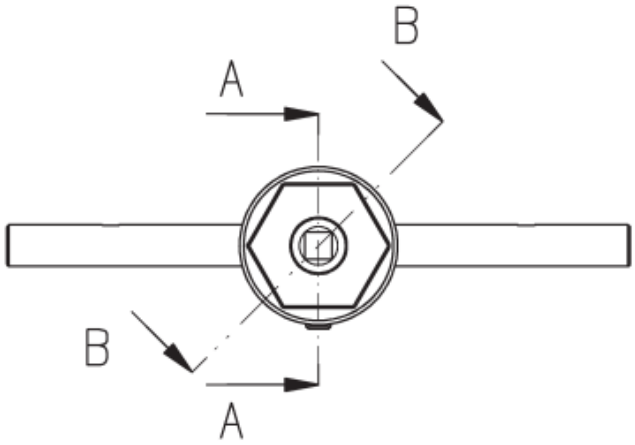
B
A
B
A

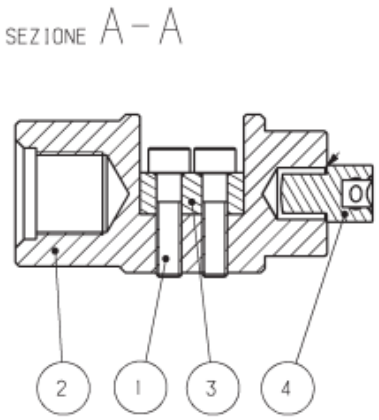
SEZIONE A-A
2
1
3
4

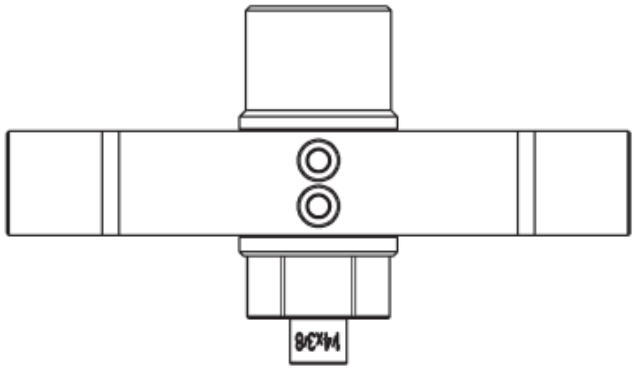

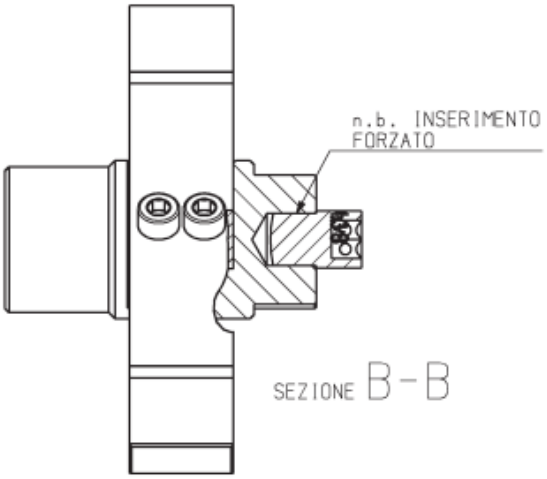
n.b. INSERIMENTO
FORZATO
SEZIONE B-B

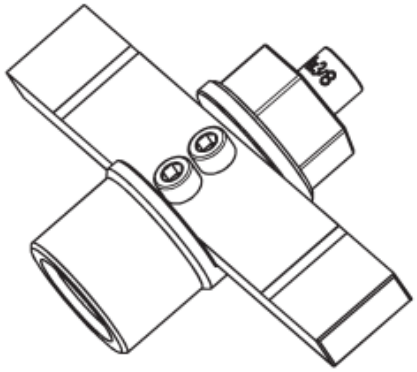

BEVEL PINION

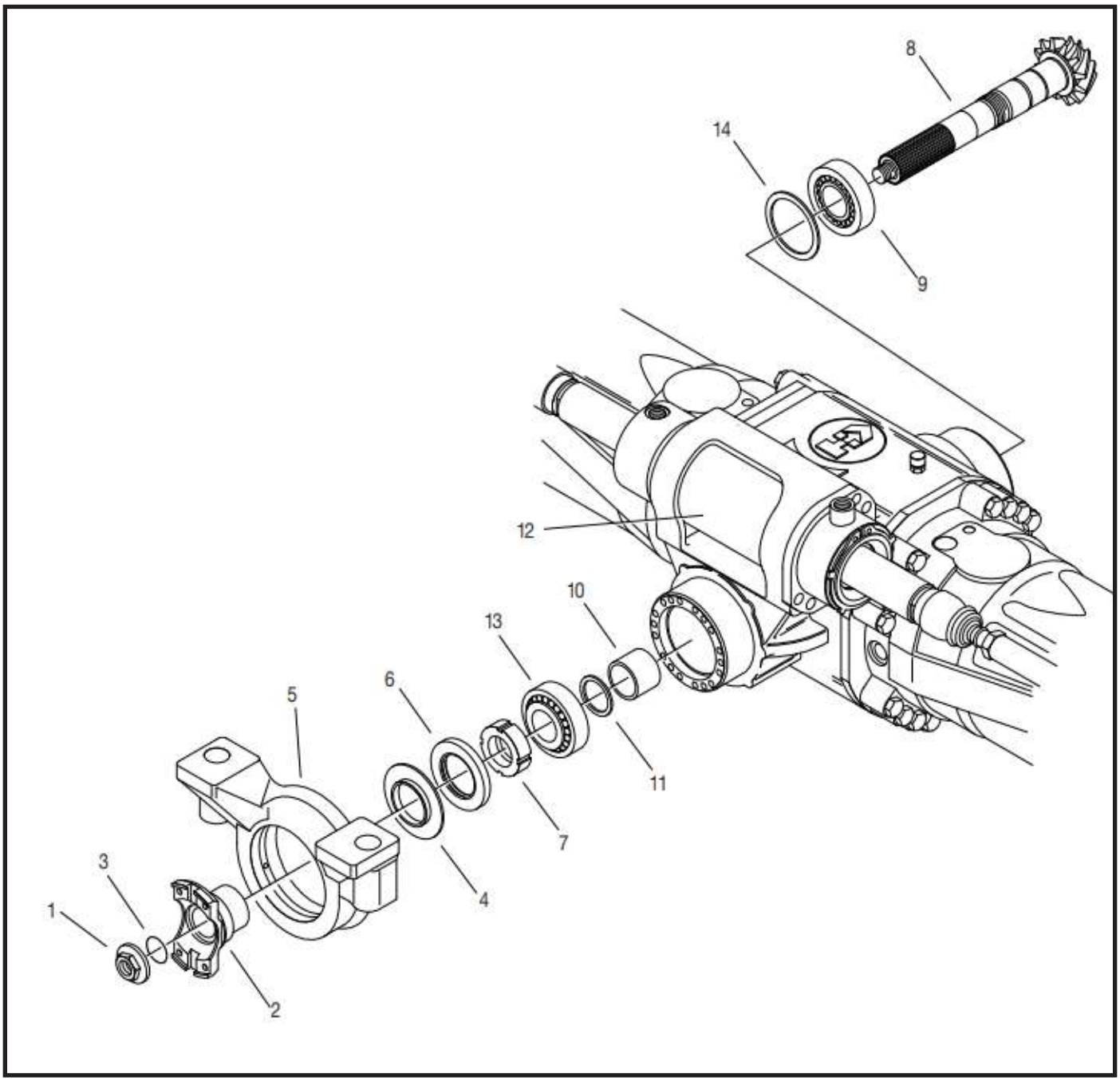

1.1.1. Disassembly

CAUTION

Before draining oil, release the internal pressure.

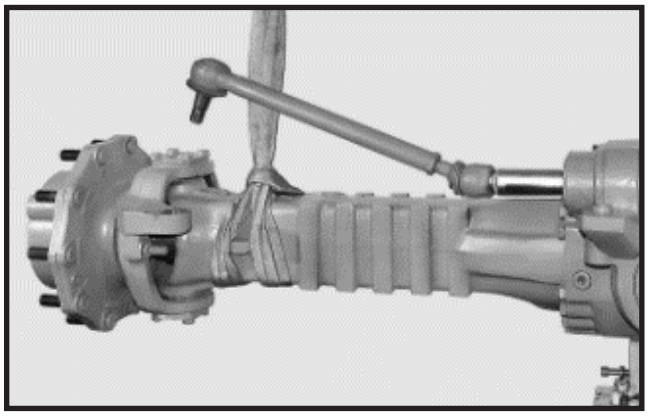

FIGURE 1: Remove the complete arms and the differential unit.

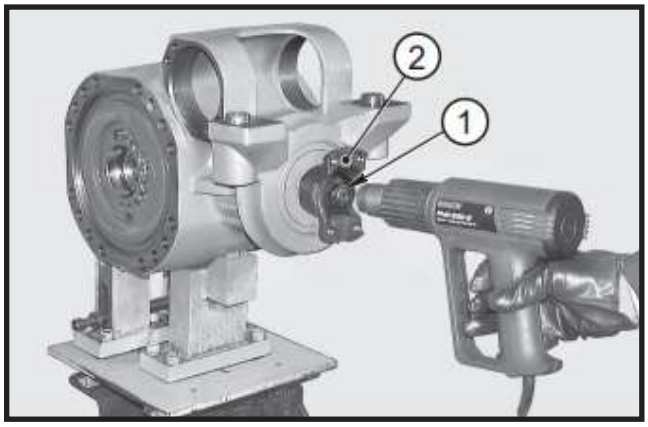

FIGURE 2: If disassembly is awkward, heat the check nut (**1**) of the flange (**2**) at 176°F (80°C).

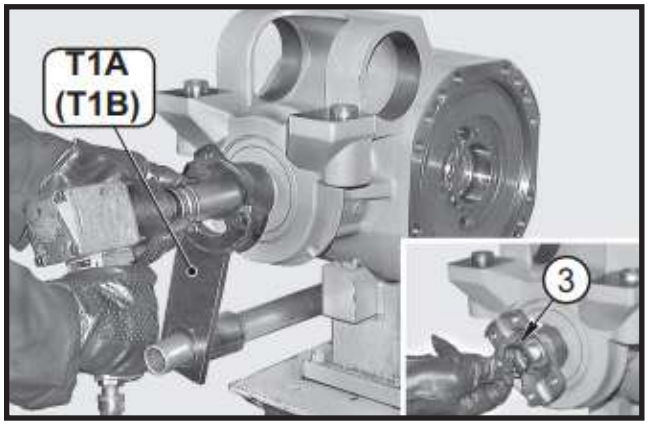

FIGURE 3: Position tool T1A (or T1B), so as to avoid pinion rotation. Loosen and remove the nut (**1**); also remove the o-ring (**3**).

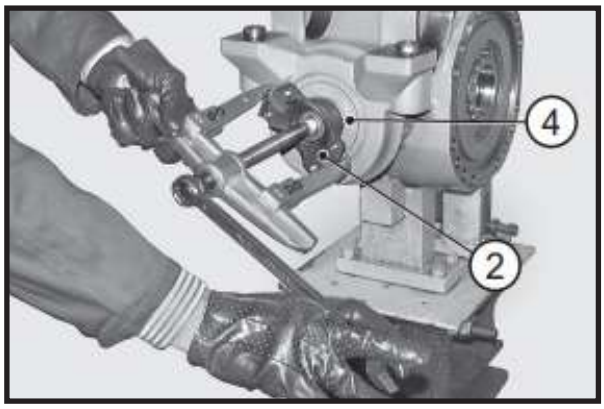

FIGURE 3: Position tool T1A (or T1B), so as to avoid pinion rotation. Loosen and remove the nut (**1**); also remove the o-ring (**3**).

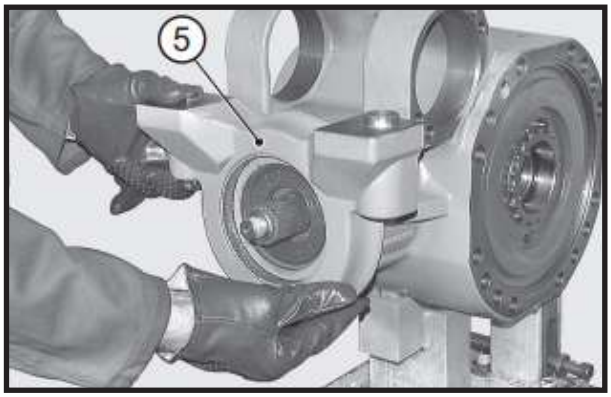

FIGURE 5: Remove the swinging support (**5**).

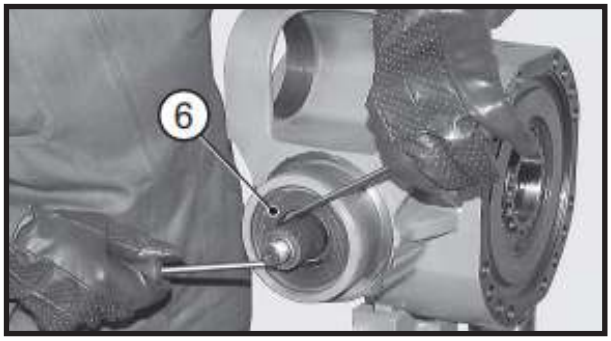

FIGURE 6: Remove the sealing ring (**6**).

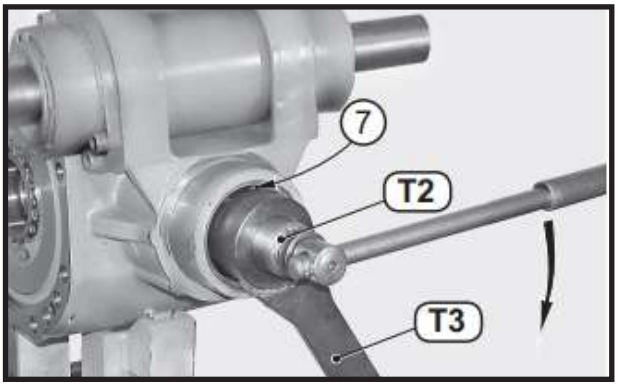

FIGURE 7: Position wrench T3 onto the ring nut (**7**) and apply bar hold T2. To the pinion (**8**). Stop wrench T3 and rotate the pinion so as to release and remove the ring nut (**7**).

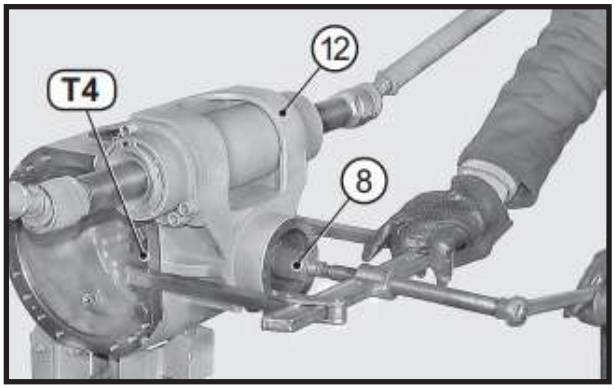

FIGURE 8: Apply blocks T4 and, using a puller, extract the pinion (**8**) complete with the internal bearing (**9**), the spacer (**10**) and shims (**11**).

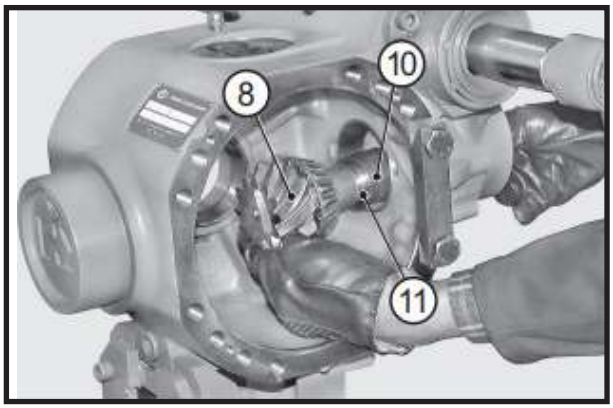

FIGURE 9: Remove the pinion (**8**), shims (**11**) and spacer (**10**).

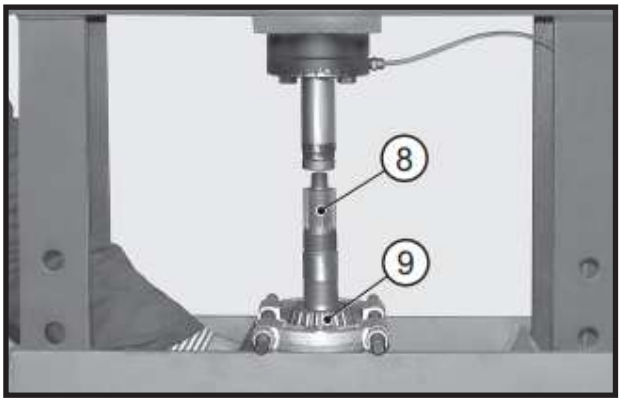

FIGURE 10: Using a puller and a press, remove the inner bearing (**9**) from the pinion (**8**).

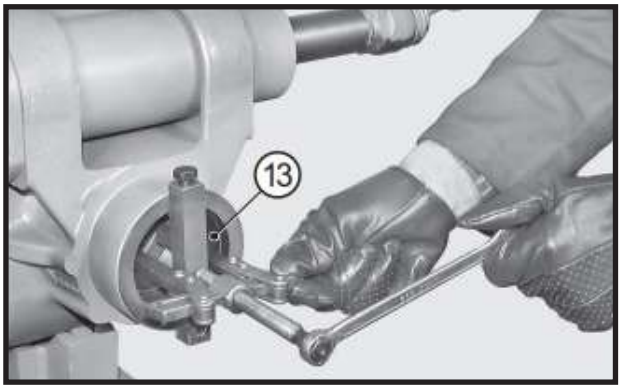

FIGURE 11: Remove the thrust block of the external bearing (**13**).

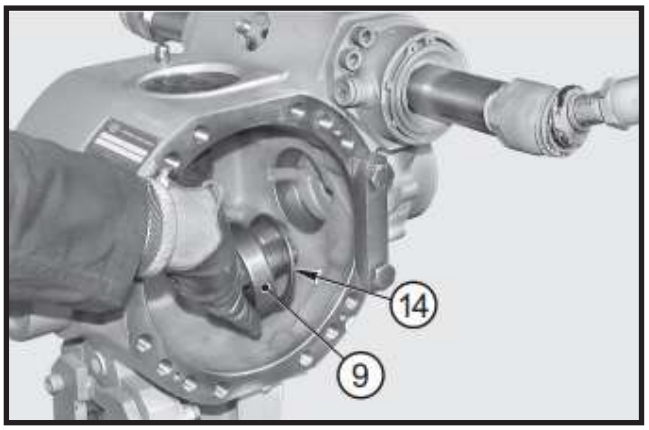

FIGURE 12: Insert a drift in the appropriate holes and remove the thrust block of the internal bearing (**9**) as well as the shim washers (**14**).

Assembly

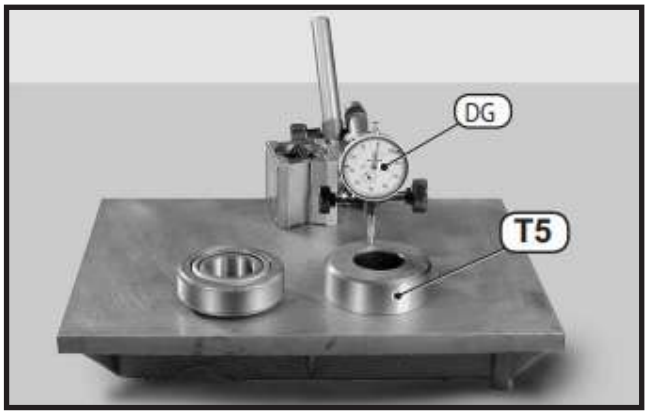

FIGURE 13: Using a surface plate, reset a dial indicator “DG” and place it on the measurement ring T5 (with a thickness of 1,2 in (30.2 mm)). Preset the depth gauge to approximately 0,08 in (2 mm).

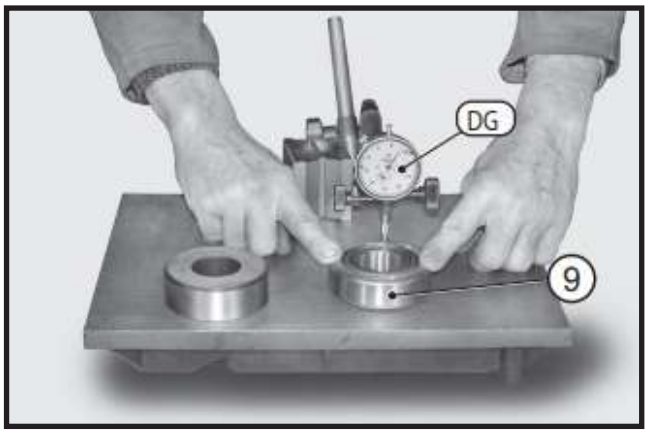

FIGURE 14: Bring the internal bearing (**9**), complete with its thrust block, under dial indicator. Determine overall thickness “D” of the bearing checking the discrepancy between this size and the size of the measurement ring.

CAUTION

Press the thrust block in the center and take several measurements while rotating the thrust block.

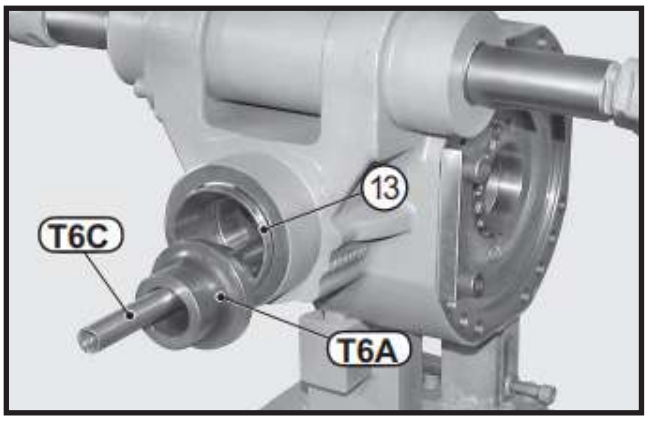

FIGURE 15: Partially insert the thrust block of the external bearing (**13**).

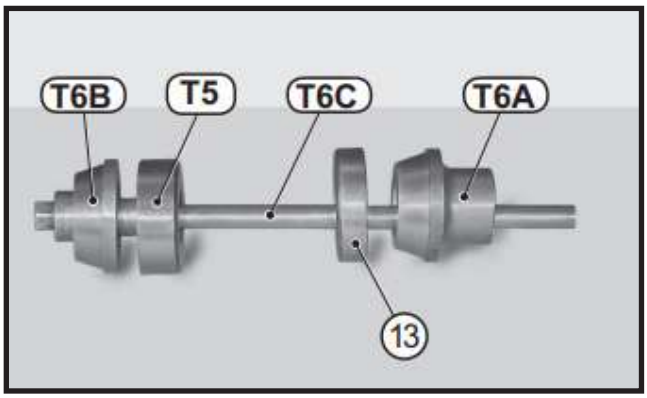

FIGURE 16: Install tension rod T6C, measurement ring T5 and front guide tool T6A on the thrust block of the external bearing (**13**).

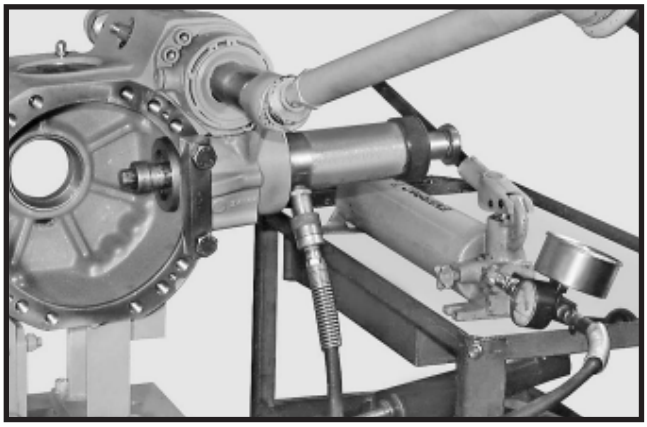

FIGURE 17: Connect the tension rod to the press and move the thrust block of the external bearing (**13**) into its seat. Disconnect the press and remove the tension rod.

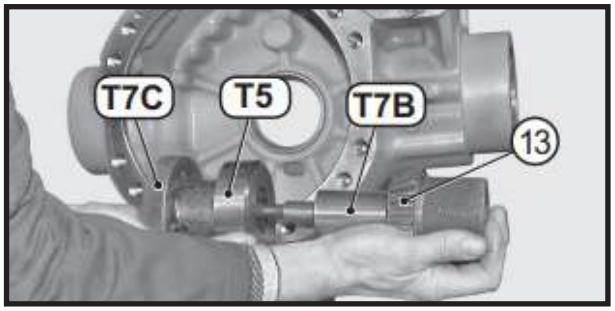

FIGURE 18: Insert tool T7B complete with external bearing (**13**), measurement ring T5 and gauged ring nut T7C Manually tighten.

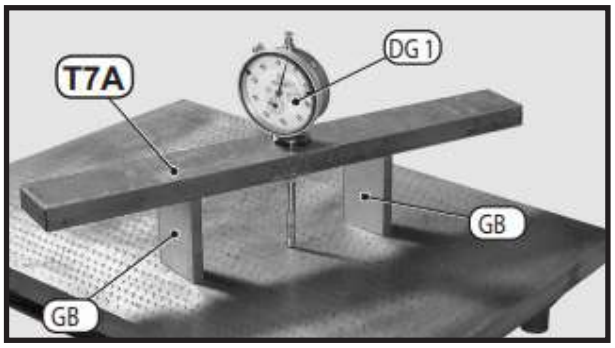

FIGURE 19: Fit a dial indicator “DG1” with long stem into bar T7A when the bar rests on two size blocks “GB” of 2,25 in (57 mm), reset the gauge. Preset the gauge to approximately 0,08 in (2 mm) and reset.

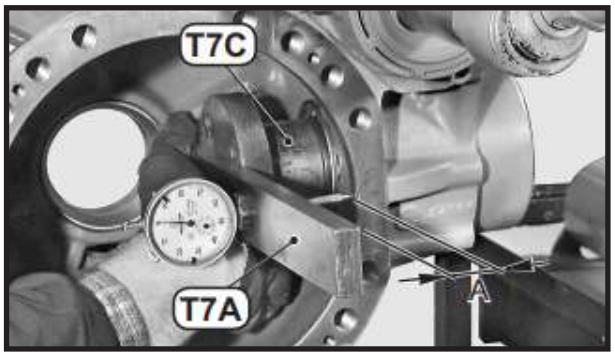

FIGURE 20: Lay bar T7A on gauged nut T7C and take the measurement “A” at about 2,25 in (57 mm) corresponding to the maximum diameter of arms centering.

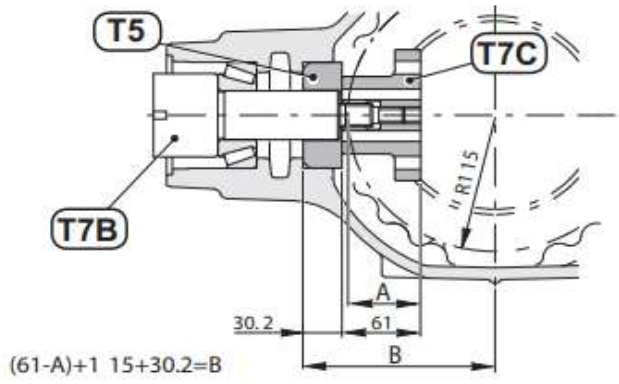

FIGURE 21: Calculate size “B” which will be the first useful value for calculating the size of the shims (**14**) that are to be inserted under the thrust block of the internal bearing (**9**).

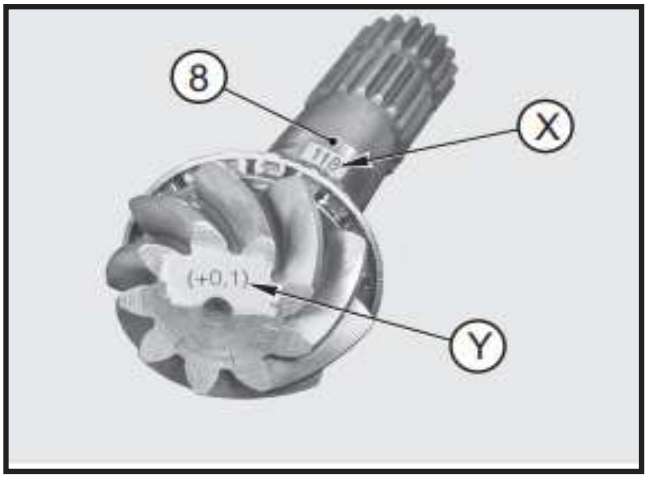

FIGURE 22: Check the nominal size (X) marked on the pinion and add or subtract the indicated variation (Y) so as to obtain size "Z". e.g: Z = 118 + 0.1 = 118.1 Z = 118 ± 0.2 = 117.8

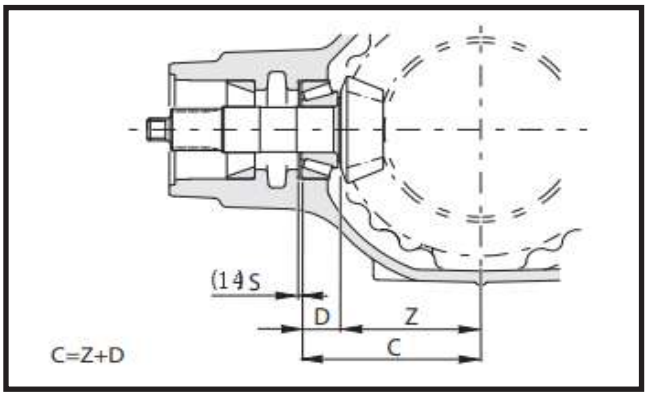

FIGURE 23: Calculate size "C" which represents the second value for calculating the size of the shims "S" that are to be placed under the thrust block of the internal bearing (**9**).

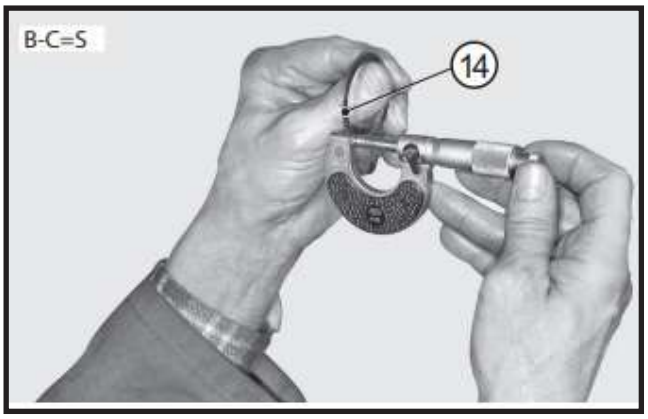

FIGURE 24: Calculate the difference between sizes "B" and "C" so as to obtain the size "S" of the shim (**14**) that will go under the thrust block of the internal bearing (**9**).

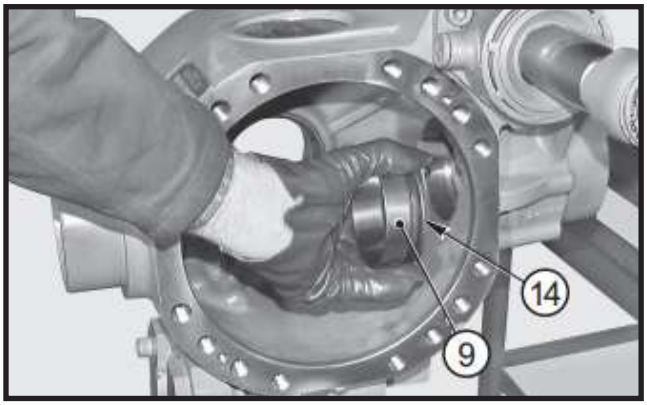

FIGURE 25: Insert shim "S" (**14**) and the thrust block of the internal bearing (**9**) in the central housing.

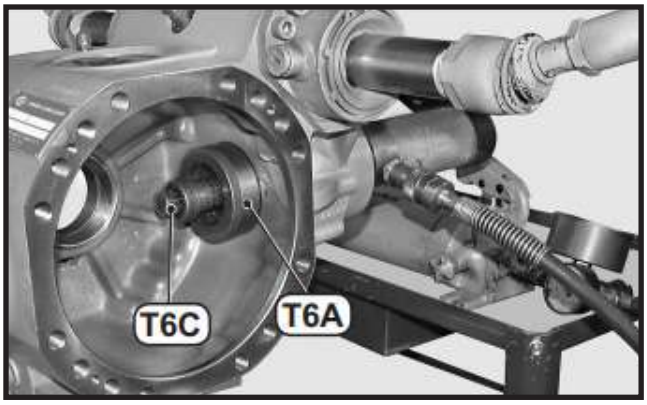

FIGURE 26: Position tool T6A and tension rod T6C. Connect the tension rod to the press, fasten the thrust block and then remove the tools.

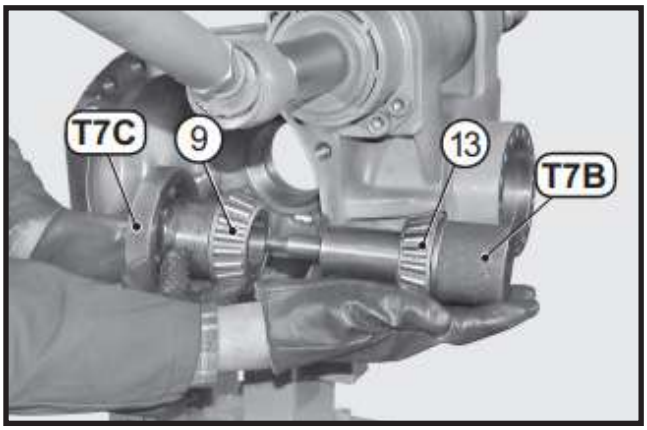

FIGURE 27: Position tools T7C and T7B complete with tapered bearings (**9, 13**); manually tighten until a rolling torque has been obtained.

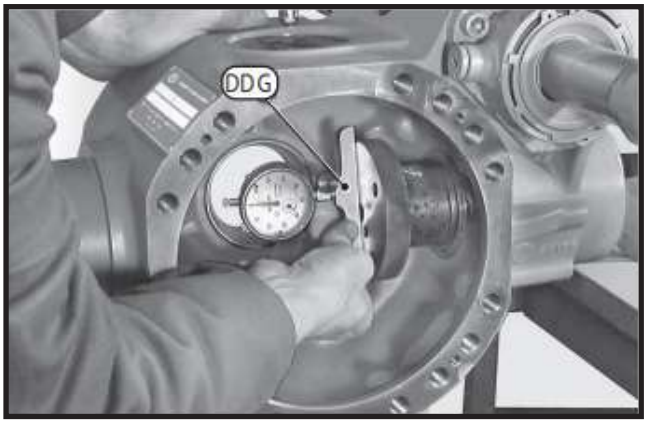

FIGURE 28: Insert the stem of a depth gauge “DDG” in either side hole of tool T7C; reset the gauge with a presetting of approximately 0,12 in (3 mm).

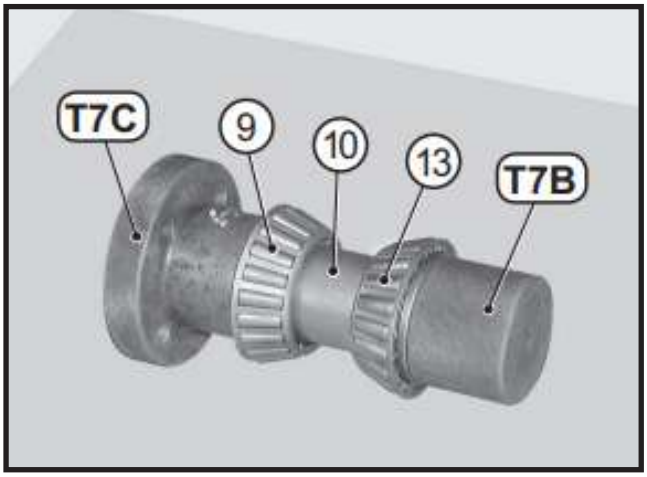

FIGURE 29: Remove the depth gauge and release tools and bearings from the central housing. Re-install all and insert the spacer (**10**) between bearings (**9, 13**); manually tighten the complete pack.

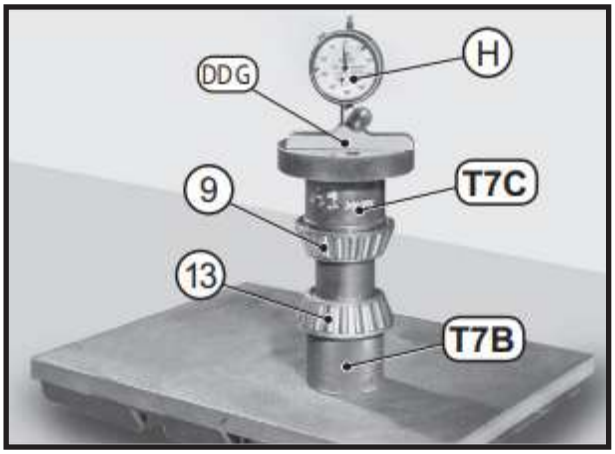

FIGURE 30: Insert depth gauge “DDG” into tool T7B T7C and measure variation “H” in relation to the zero setting performed back at **Figure 28**.

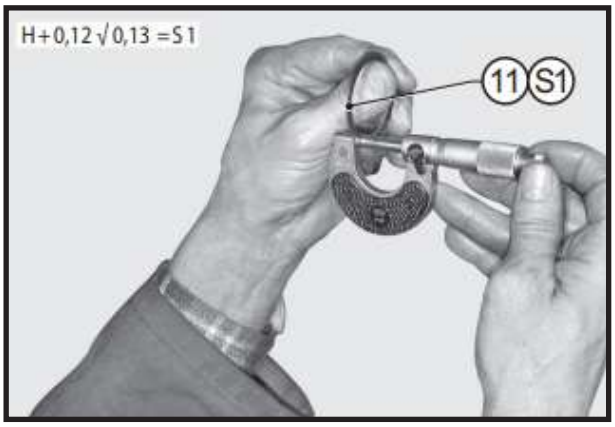

FIGURE 31: The variation is to be added to a set value of 0.12 - 0.13 mm. so as to obtain the size of shim “S1” (**11**) which will be inserted between the external bearing (**13**) and the spacer (**10**) and subsequently, to determine the preload for the bearings.

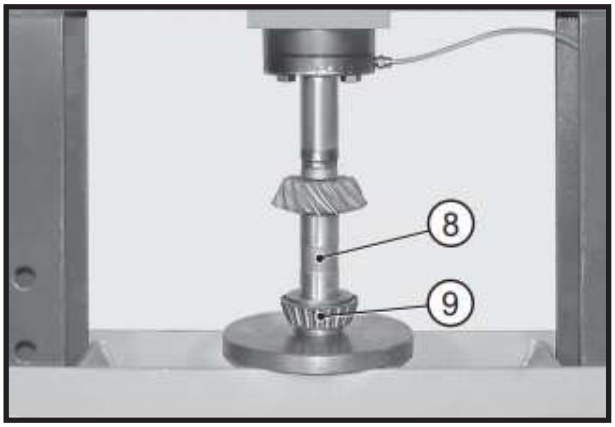

FIGURE 32: Position the internal bearing (**9**) and the pinion (**8**) under a press; force the bearing onto the pinion.

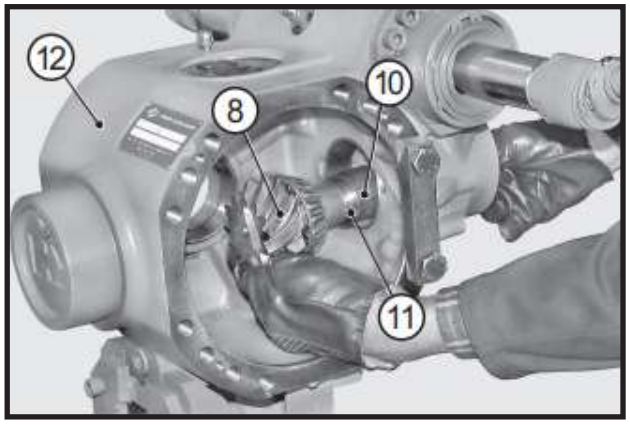

FIGURE 33: Fit the pinion (**8**), shim “S1” (**11**) and spacer (**10**) in the central housing (**12**).

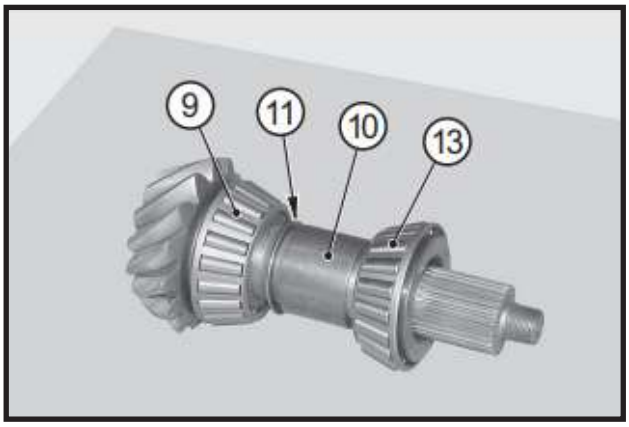

FIGURE 34: Insert the external bearing (**13**) in the central housing in order to complete the pack arranged as in the figure.

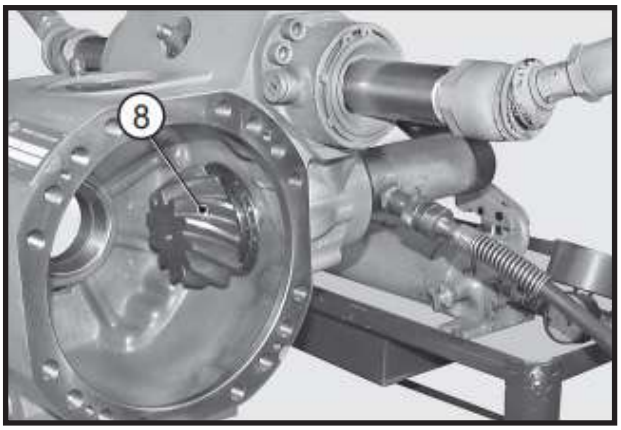

FIGURE 35: Connect the pinion (**8**) to the tie rod T8A and T8B connect the tie rod T8C to the press and block.

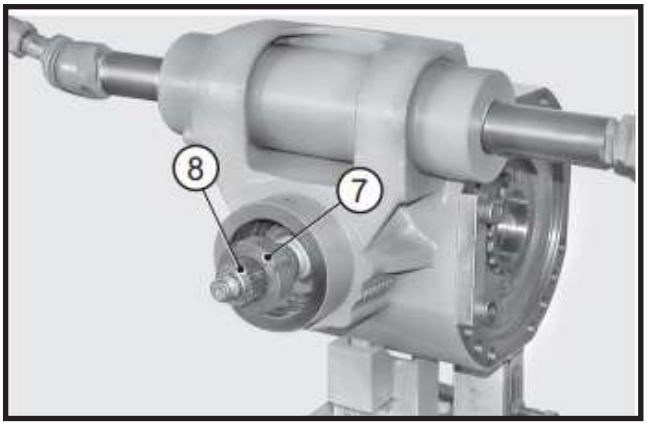

FIGURE 36: STANDARD INPUT FLANGE VERSION Apply Loctite 242 to the thread of the ring nut (**7**) and screw the nut onto the pinion (**8**).

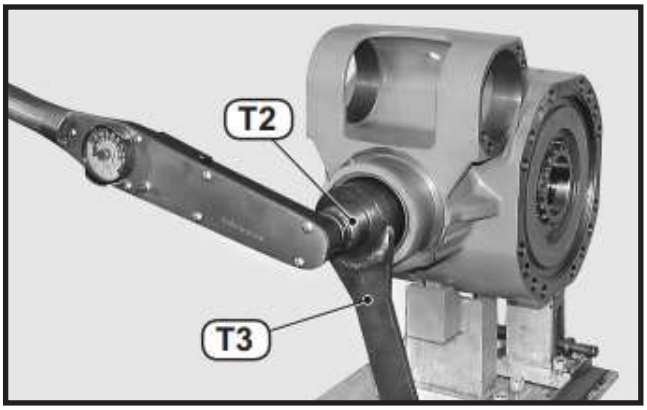

FIGURE 37: STANDARD INPUT FLANGE VERSION Apply special wrench T3 to the ring nut (**7**) and bar-hold T2 to the pinion (**8**). Lock the wrench T3 and rotate the pinion using a torque wrench, up to a minimum required torque setting of 369 ft-lb (500 N·m).

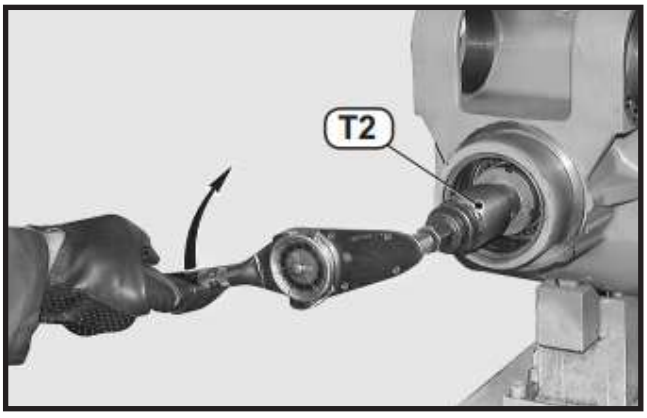

CAUTION

STANDARD INPUT FLANGE VERSION

If torque exceeds the maximum value, then the size of shim

“S1” (**11**) between the bearing (**13**) and the spacer (**10**) needs to be increased.

If torque does not reach the set value, increase the torque setting of the ring nut (**7**) in different stages to obtain a maximum value of 420 ft-lb (570 N·m).

If torque does not reach the minimum value, then the size of shim “S1” (**11**) needs to be reduced. When calculating the increase or decrease in size of shim “S1”, bear in mind that a variation of shim (**11**) of 0,0004 in (0.01 mm) corresponds to a variation of 60 N·cm in the torque of the pinion (**8**).

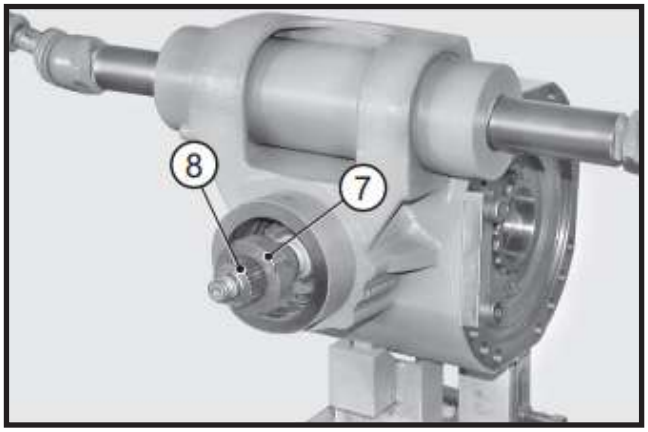

FIGURE 39: FLANGED GEARBOX VERSION
Apply Loctite 270 to the thread of the ring nut (**7**) and screw the nut onto the pinion (**8**).

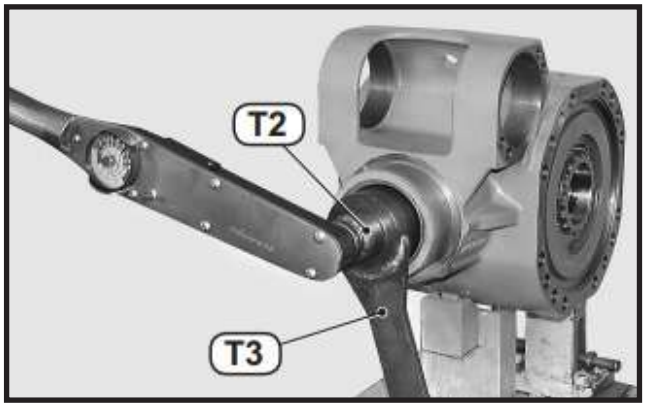

FIGURE 40: FLANGED GEARBOX VERSION
Apply special wrench T3 to the ring nut (**7**) and bar-hold T2 to the pinion (**8**). Lock the wrench T3 and rotate the pinion using a torque wrench, up to a minimum required torque setting of 664 ft-lb (900 N·m).

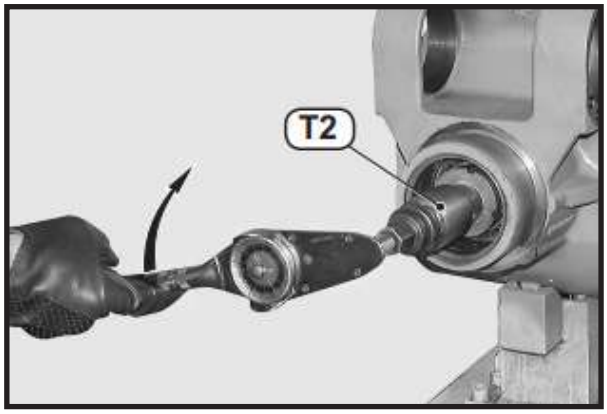

FIGURE 41: FLANGED GEARBOX VERSION
Apply onto the pinion (**8**) the bar-hold and using a torque wrench, check the torque of the pinion (**8**). Torque: 0.9-1.5 ft-lb (120 - 200 N·cm).

CAUTION

FLANGED GEARBOX VERSION

If torque exceeds the maximum value, then the size of shim “S1” (**11**) between the bearing (**13**) and the spacer (**10**) needs to be increased. If torque does not reach the set value, increase the torque setting of the ring nut (**7**) in different stages to obtain a maximum value of 737 ft-lb (1000 N·m). If torque does not reach the minimum value, then the size of shim “S1” (**11**) needs to be reduced. When calculating the increase or decrease in size of shim “S1”, bear in mind that a variation of shim (**11**) of 0,0004 in (0.01 mm) corresponds to a variation of 0.44 ft-lb (60 N·cm) in the torque of the pinion (**8**).

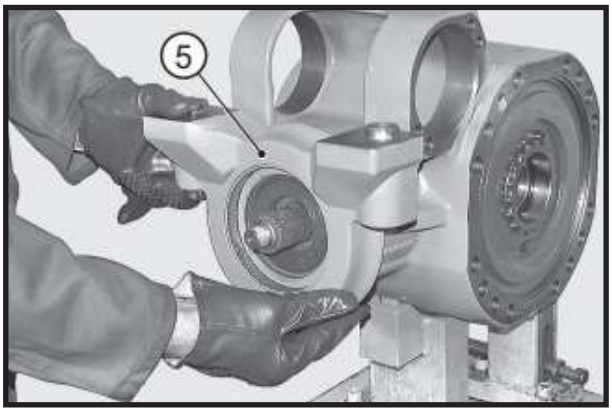

FIGURE 42: Install the swinging support (**5**).

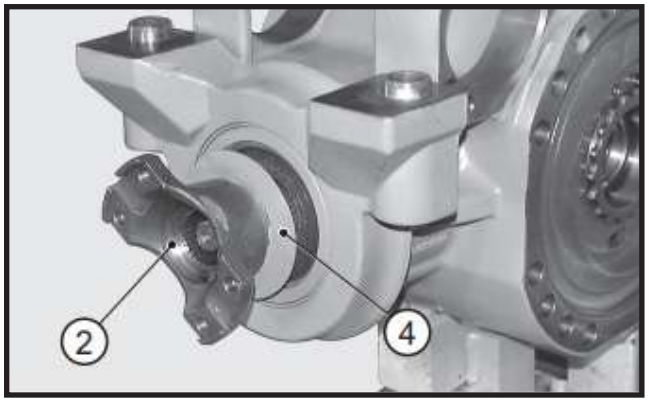

FIGURE 43: Fit the flange (**2**) complete with the guard (**4**) and fasten it. For seating the flange (**2**), use a plastic hammer if necessary.

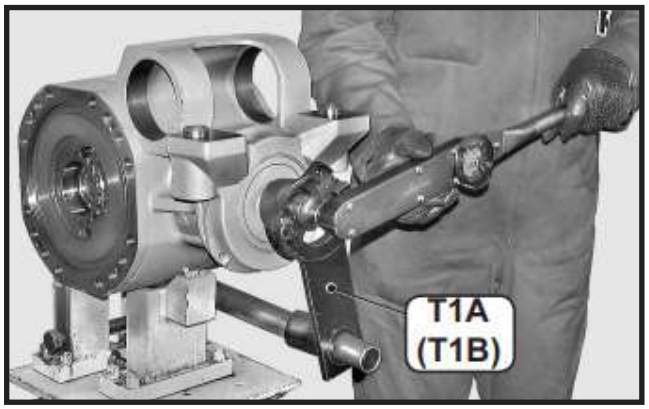

FIGURE 44: Apply Loctite 242 to the threaded part of the pinion (**8**). Position tool T1A (or T1B) and fasten it in order to avoid rotation. Insert o-ring (**3**) the nut (**1**) and tighten it using a torque wrench. Torque wrench setting: 206-229 ft-lb (280 - 310 N·m).

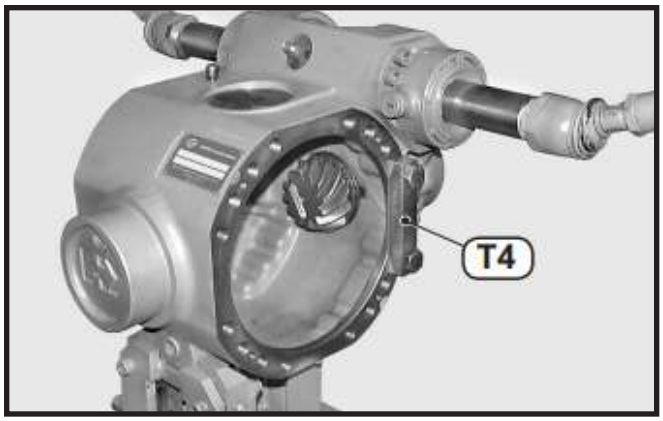

FIGURE 45: Remove blocks T4 (used for extracting the pinion) and re-install the arms

T1

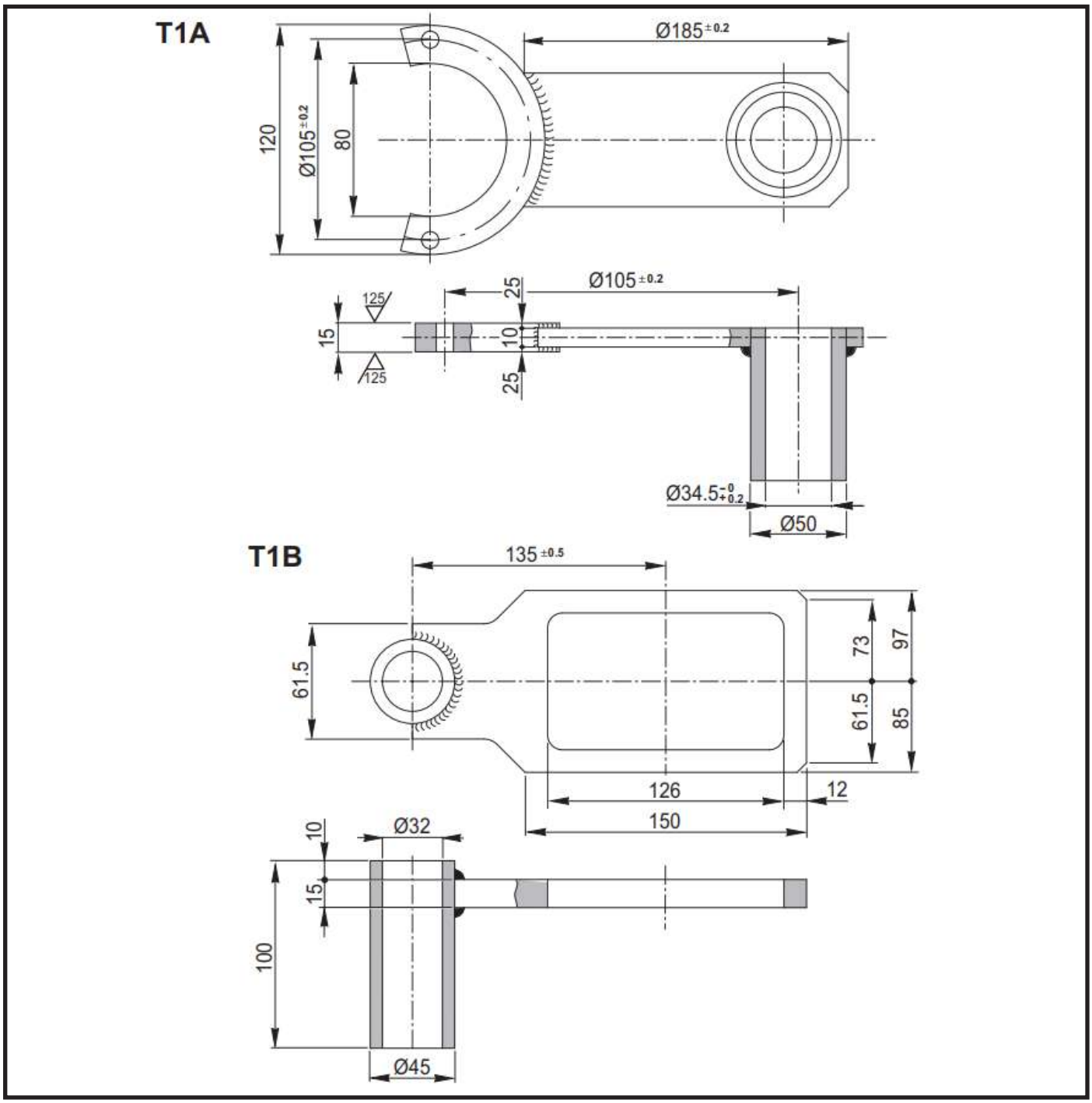
T1A
Ø185 ±0.2
120
Ø105 ±0.2
80
125
25
Ø105 ±0.2
15
10
125
25
Ø34.5 +0 -0.2
Ø50
T1B
135 ±0.5
61.5
73
97
61.5
85
126
12
150
10
Ø32
15
100
Ø45

T2

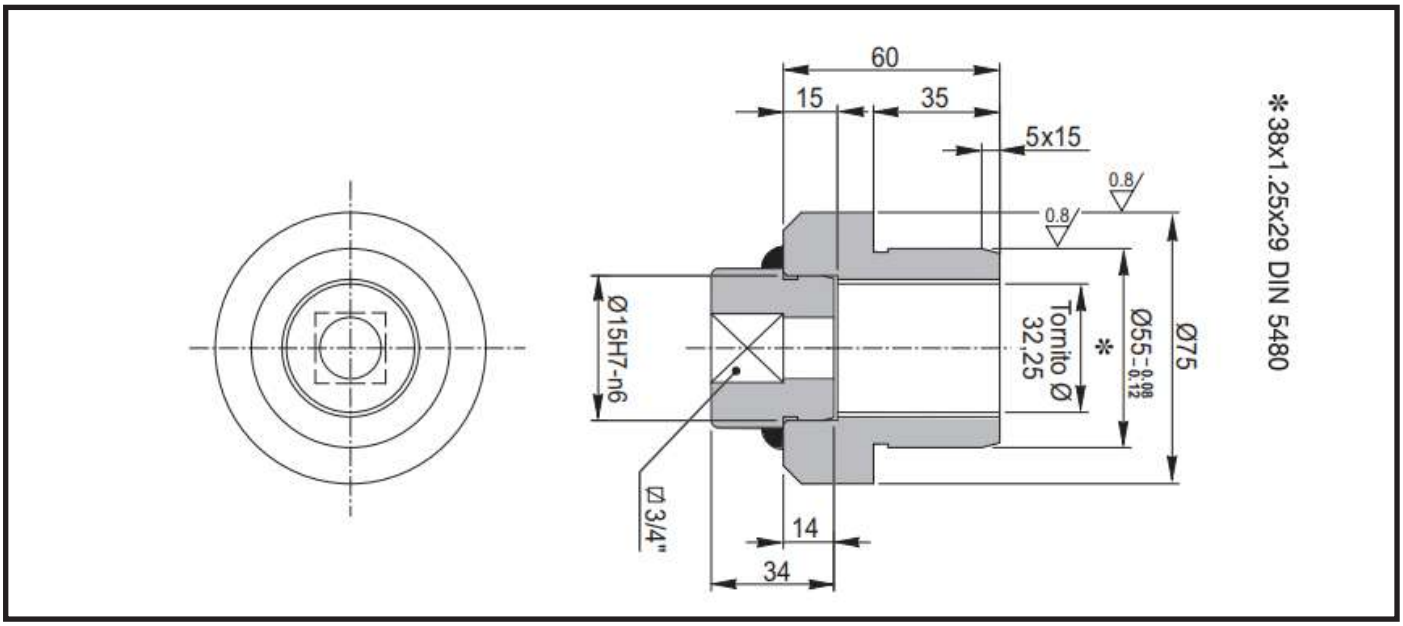
60
15
35
5x15
0.8
0.8
Ø15H7-n6
Tornito Ø 32,25
*
Ø55 -0.08 -0.12
Ø75
⌀ 3/4"
14
34
*38x1.25x29 DIN 5480

T3

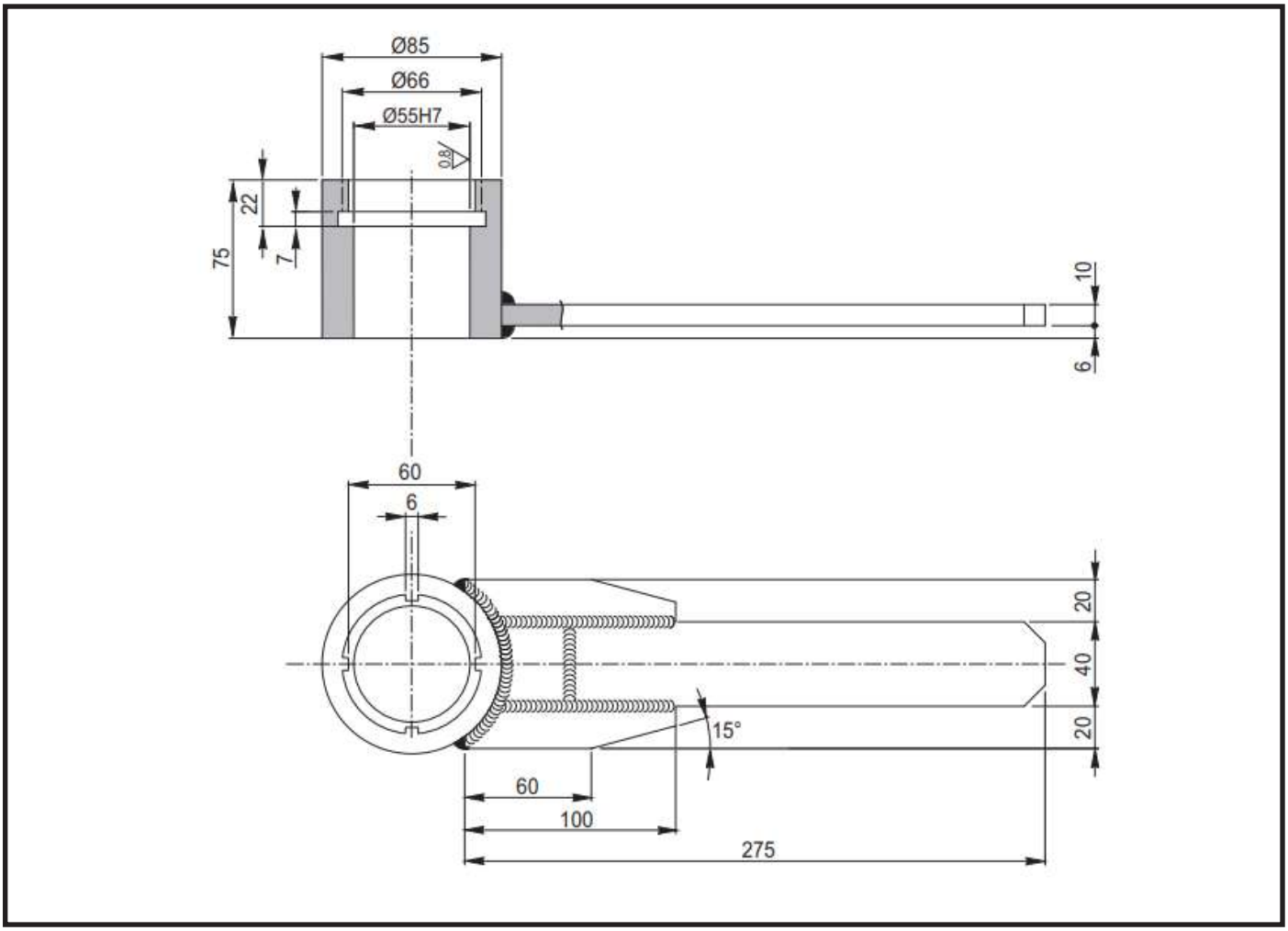
Ø85
Ø66
Ø55H7
0.8
22
7
75
10
6
60
6
20
40
20
15°
60
100
275

T4

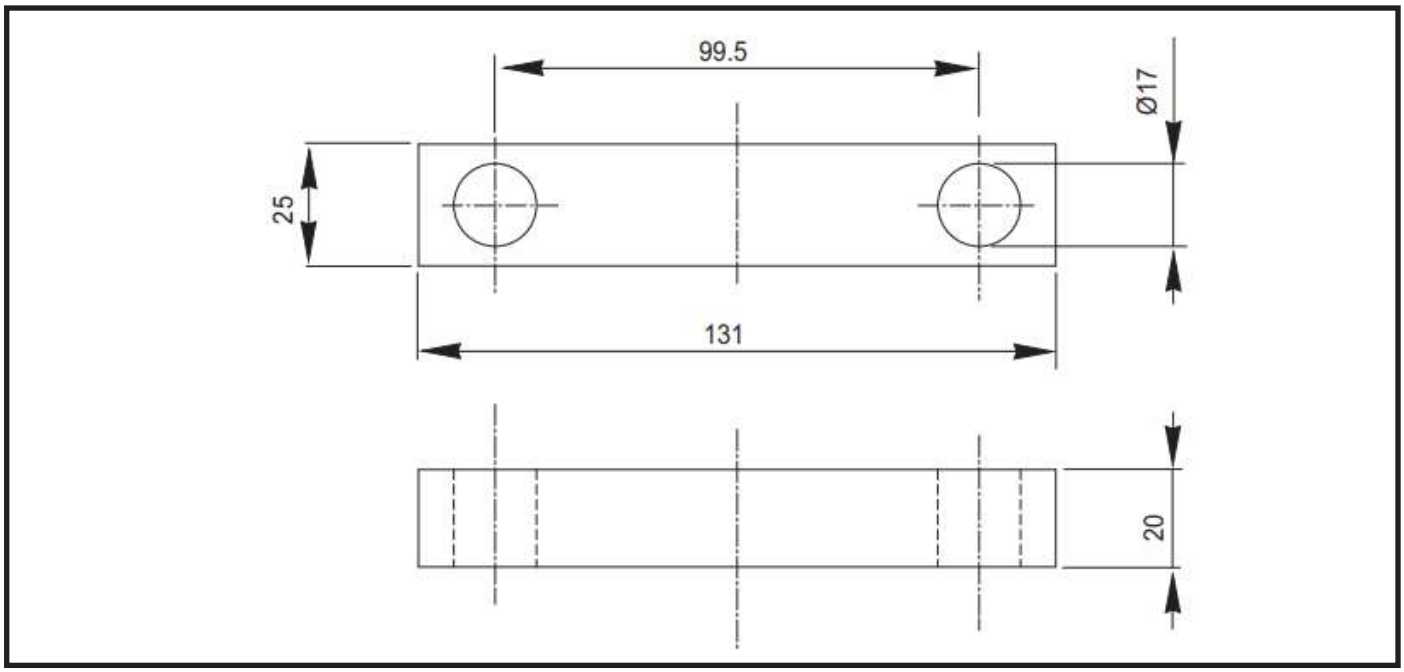

T5

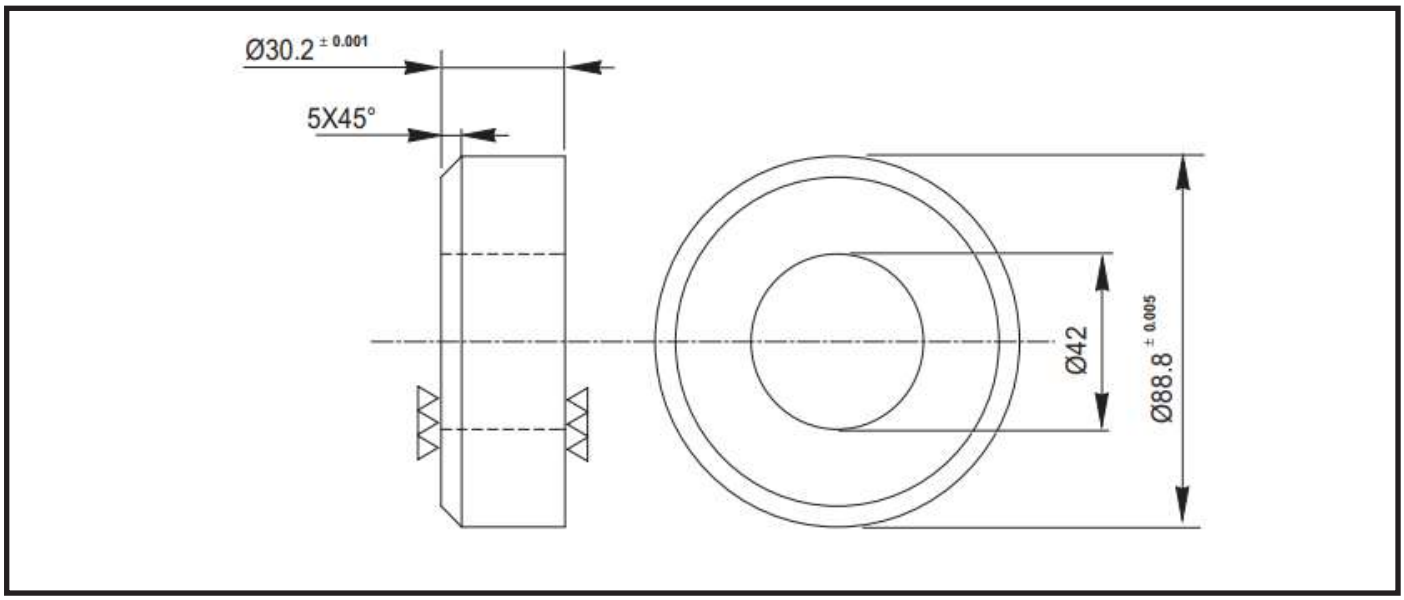

T6

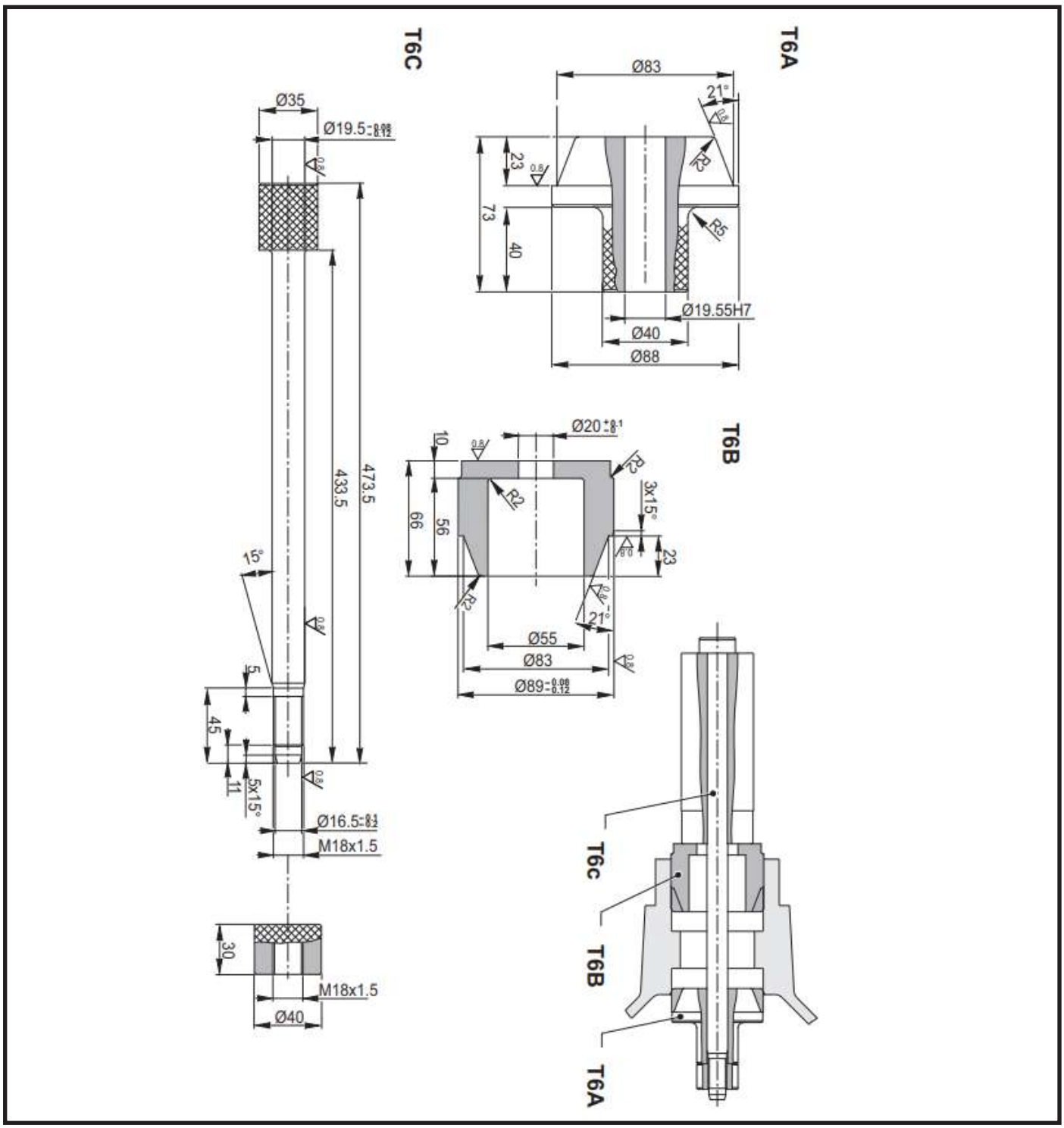
T6C
Ø35
Ø19.5
473.5
433.5
15°
5
45
11
5x15°
Ø16.5
M18x1.5
30
M18x1.5
Ø40
T6A
Ø83
21°
23
73
40
R2
R5
Ø19.55H7
Ø40
Ø88
T6B
Ø20
10
66
56
R2
3x15°
23
21°
Ø55
Ø83
Ø89
T6c
T6B
T6A

T7

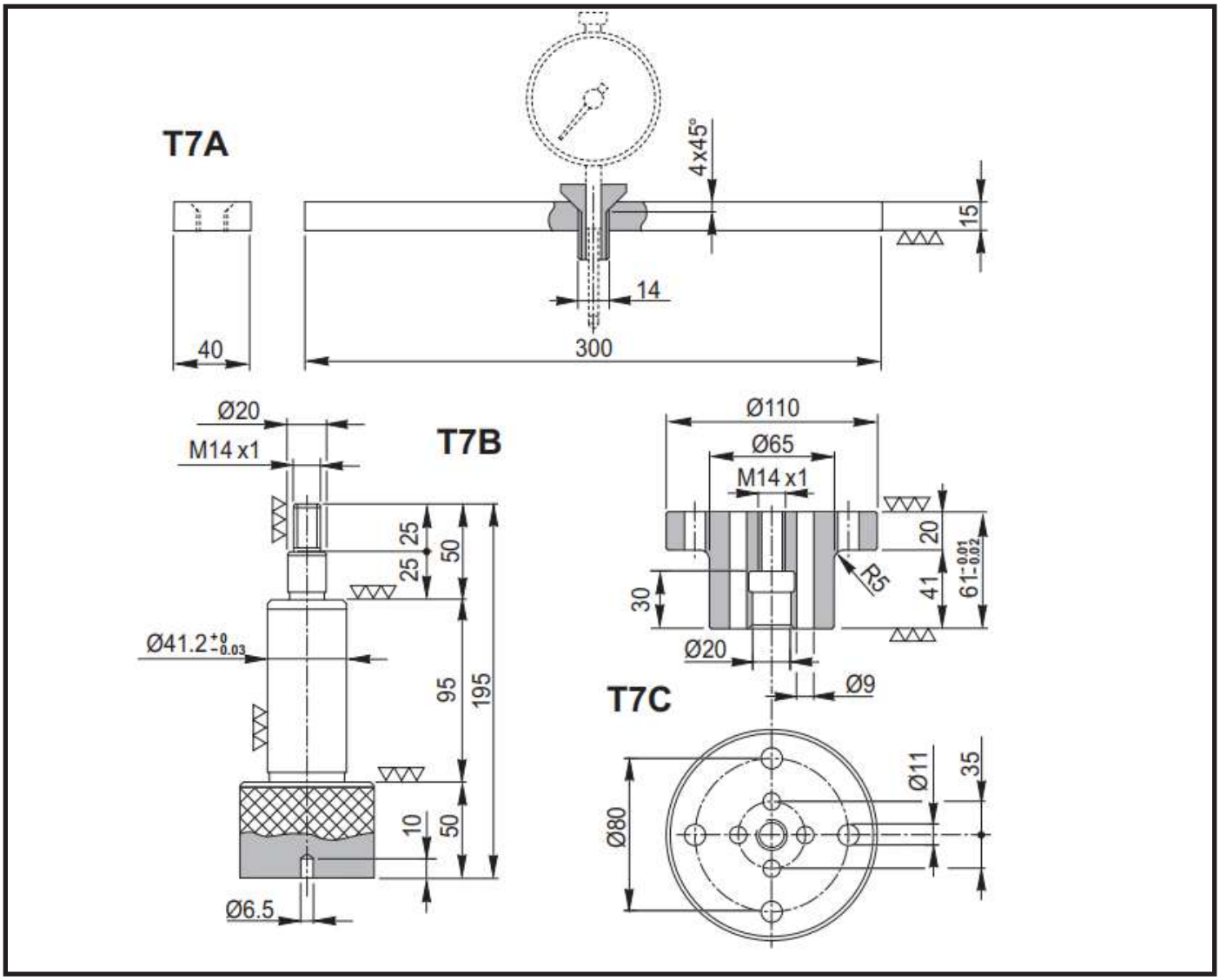
T7A
4x45°
15
14
40
300
T7B
Ø20
M14 x1
25
25
50
95
195
Ø41.2 +0 -0.03
10
50
Ø6.5
Ø110
Ø65
M14 x1
20
41
61 -0.01 -0.02
30
R5
Ø20
Ø9
T7C
Ø11
35
Ø80

T8

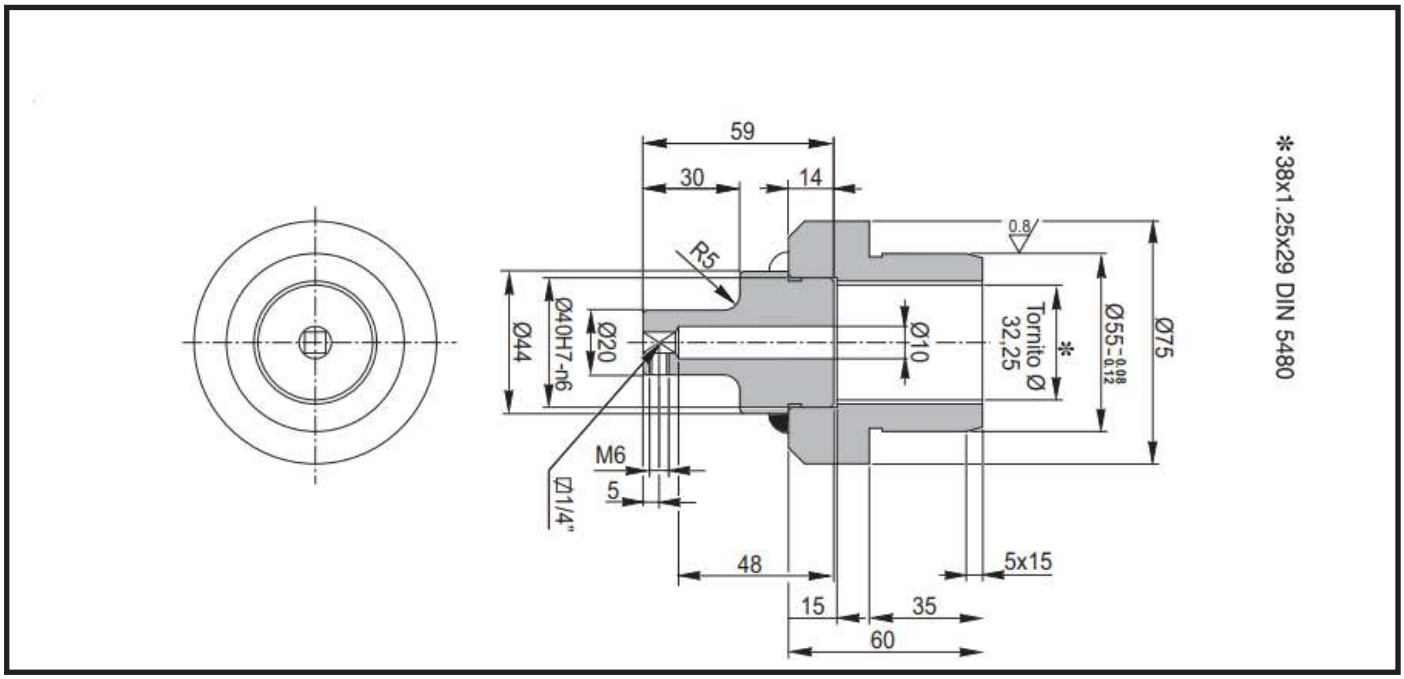
59
30
14
R5
0.8
Ø44
Ø40H7-n6
Ø20
Ø10
Tornito Ø 32.25
*
Ø55 -0.08 -0.12
Ø75
M6
5
Ø1/4"
48
5x15
15
35
60
* 38x1.25x29 DIN 5480

T9

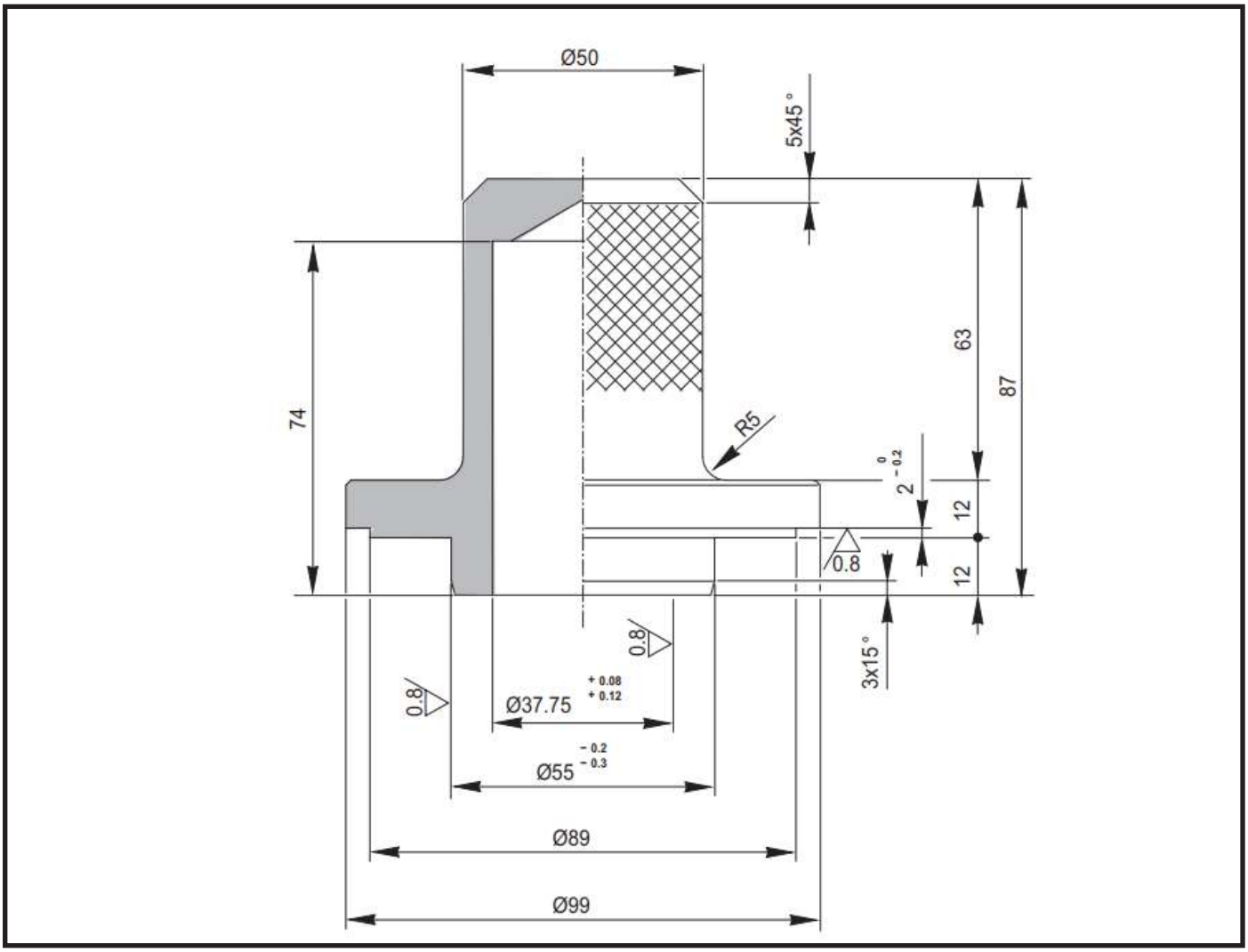
Ø50
5x45°
63
87
74
R5
2 0 -0.2
12
12
0.8
3x15°
0.8
0.8
Ø37.75 +0.08 +0.12
Ø55 -0.2 -0.3
Ø89
Ø99

MANUAL EMERGENCY RELASE

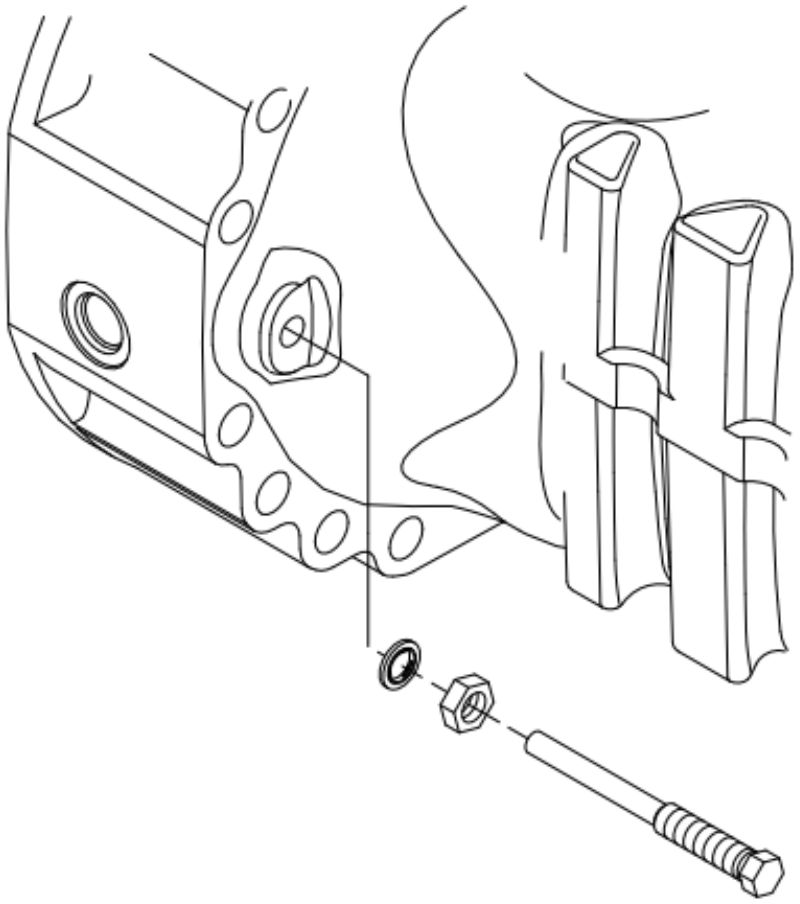

RELEASE

WARNING

Before maintaining brakes, when the axle is installed on the vehicle, follow all safety instructions in the Original Equipment Manufacturer (OEM) manual that came with the vehicle.

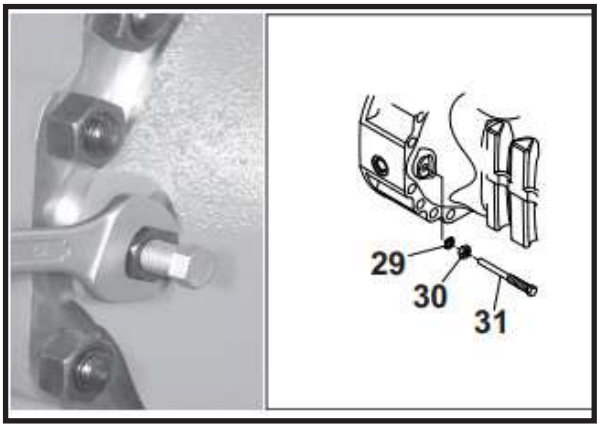

FIGURE 1: Loosen nuts (**30**) of screws (**31**) provided for the mechanical and manual release of the braking units, then completely move the nuts backwards.

FIGURE 2: Screw in release bolts (31) until contact is made with the pusher plate (**23**). Once contact is made, the torque to rotate will increase.

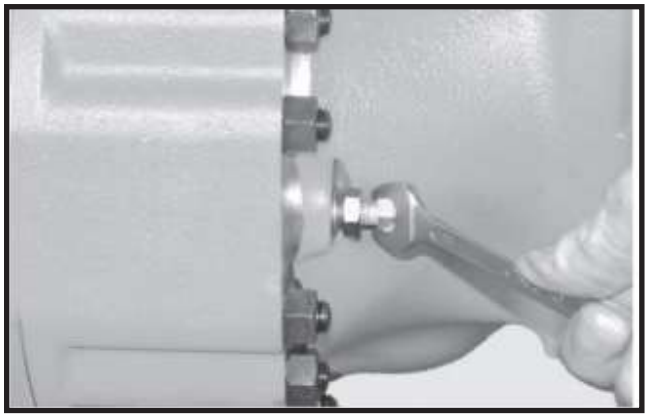

FIGURE 3: From this position, gradually tighten the bolts 1/4 turn alternating between each side.

CAUTION

A maximum of 1,5 turns of the screw can be used to release the brakes.

WARNING

Hold screws (**31**) into position while locking the nuts (**30**); after locking, check the distance of screws (**31**) once more.

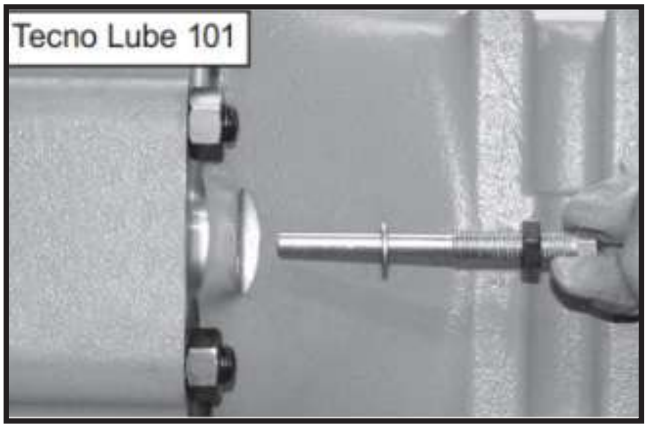

FIGURE 4: Remove screws complete with nuts and seals. Replace seals, apply silicone-based Tecno Lube /101 grease to the screws and install all parts into the arm.

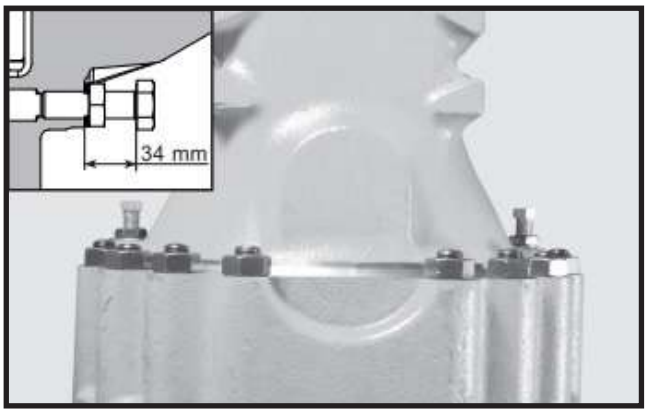

FIGURE 5: Adjust screws (**31**) to obtain a distance of 1,34 ± 0,02 in (34 ± 0.5 mm) between axle machined surface and screw underhead.

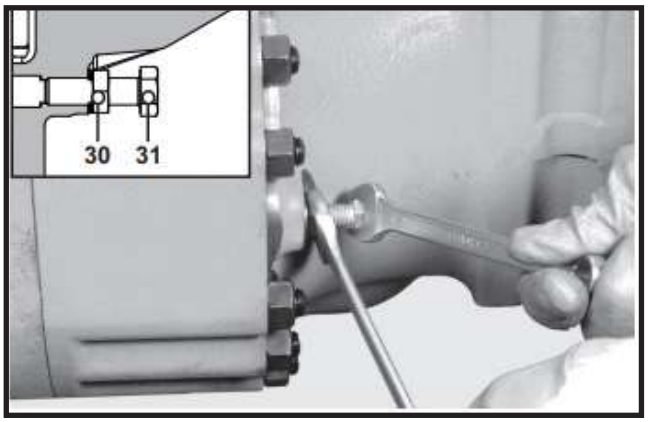

FIGURE 6: Lock into position with nuts (**30**).

MECHANICAL PARKING BRAKE

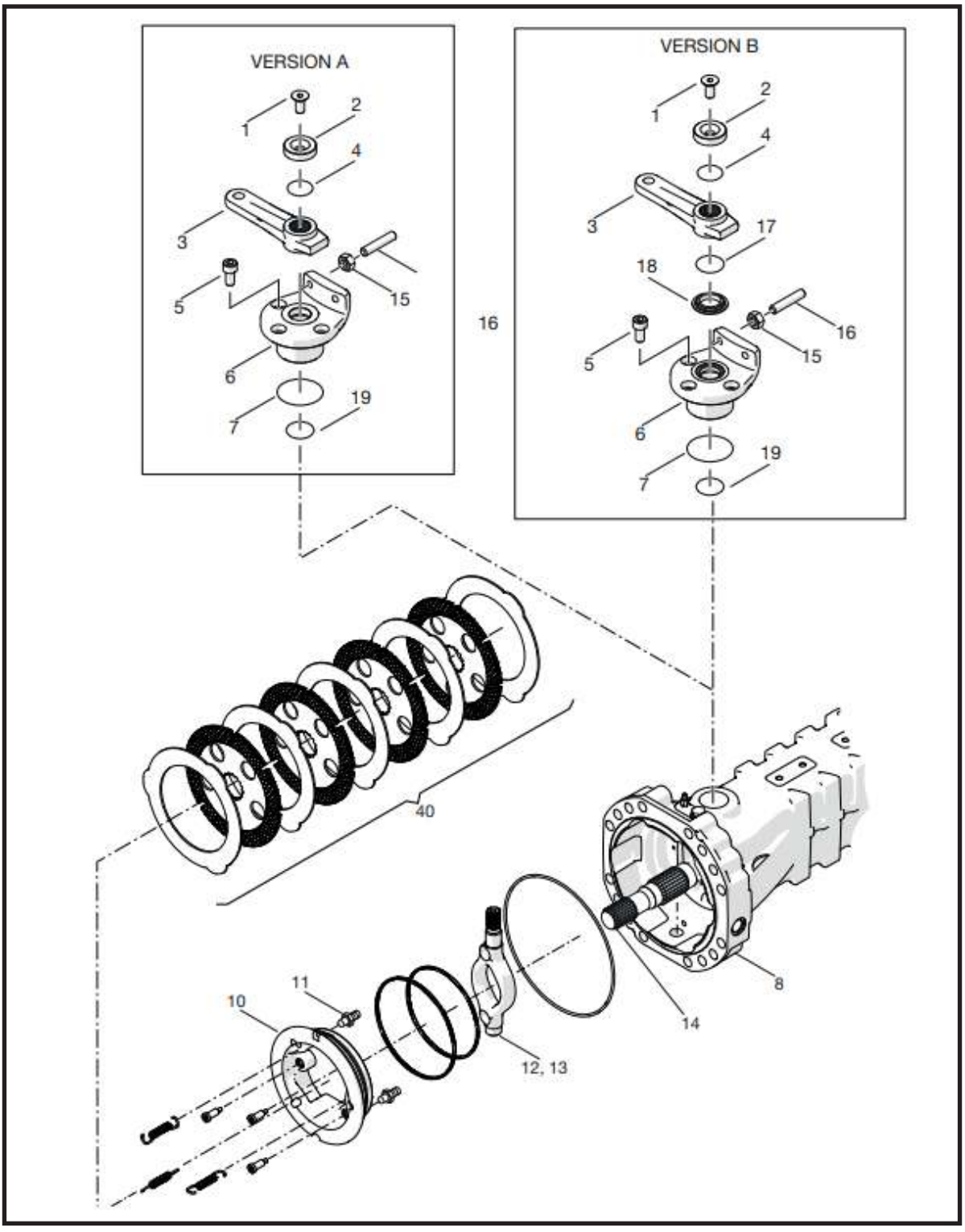

!	**CAUTION**

The thrust levers (12, 13) are asymmetrical, pay attention to assemble the RIGHT HAND SIDE thrust lever in the RIGHT HAND SIDE arm and vice-versa.

VIEWPOINT DEFINITION

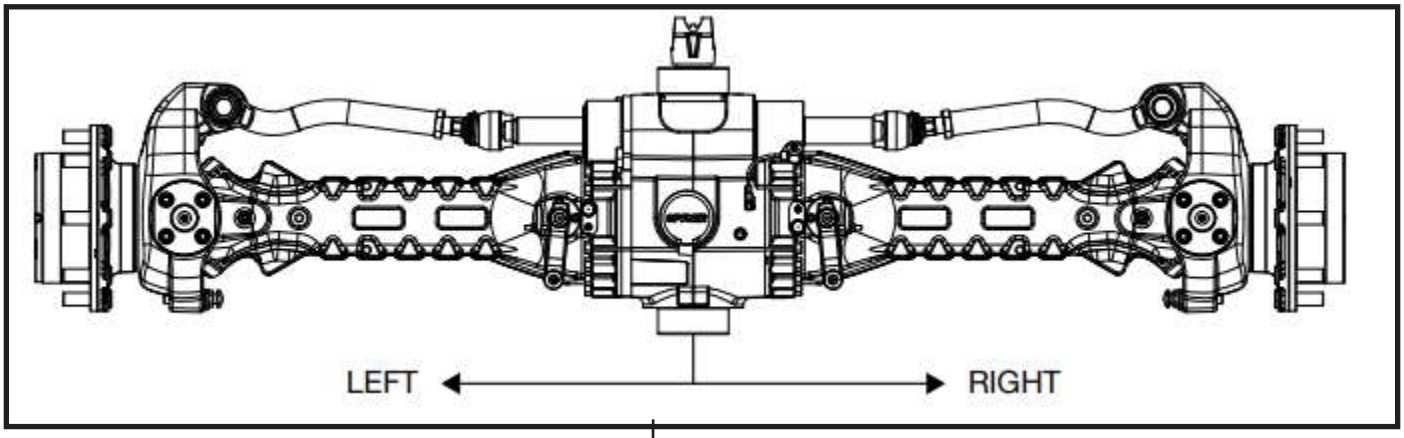

CAUTION

The terms RIGHT and LEFT refer to the position outside facing the machine (with the input drive facing forward).

Disassembly

WARNING

Before operating on brakes, when the axle is installed on the vehicle, lock in safety position the vehicle and ensure that the vehicle cannot roll away following all safety instructions in the Original Equipment Manufacturer (OEM) manual that came with the vehicle.

CAUTION

The following operations must be performed on both mechanical parking brake (both sides).

CAUTION

Before draining oil, release the internal pressure.

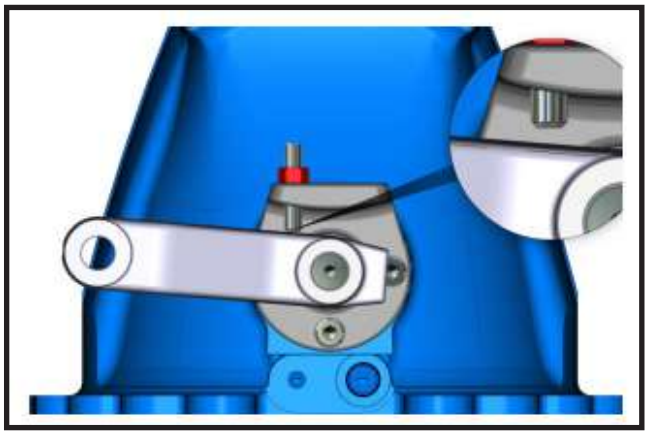

FIGURE 1: Completely unscrew the nut (**15**) and the screw (**16**).

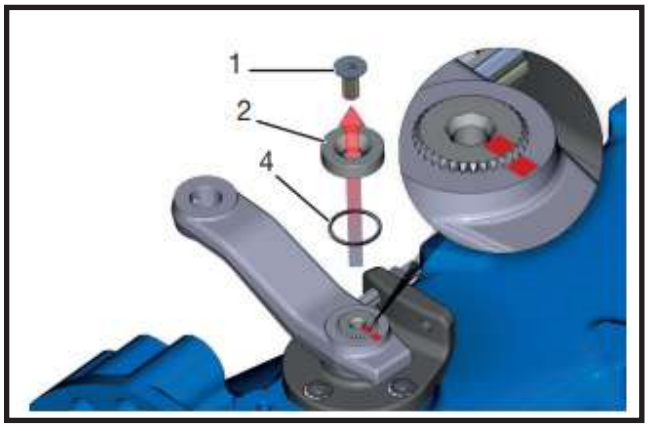

FIGURE 2: Remove the screw (**1**) locking the washer (**2**) that stops the lever (**3**). Remove the washer (**2**) with the o-ring (**4**).

CAUTION

Mark the positions of levers (**3**) in relation to the thrust levers (**12**).

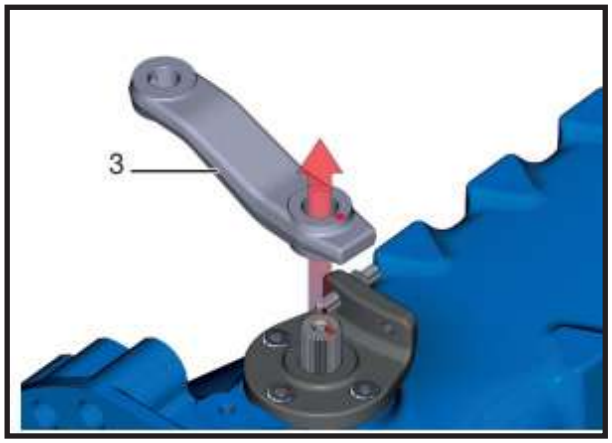

FIGURE 3: ONLY FOR VERSION “A”

Remove the lever (**3**).

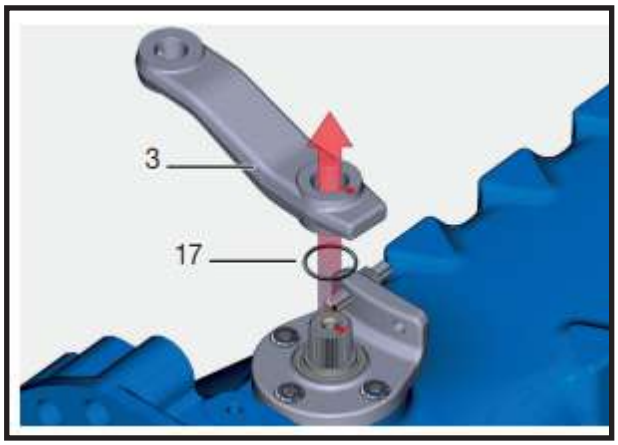

FIGURE 4: ONLY FOR VERSION “B”

Remove the lever (**3**) and o-ring (**17**).

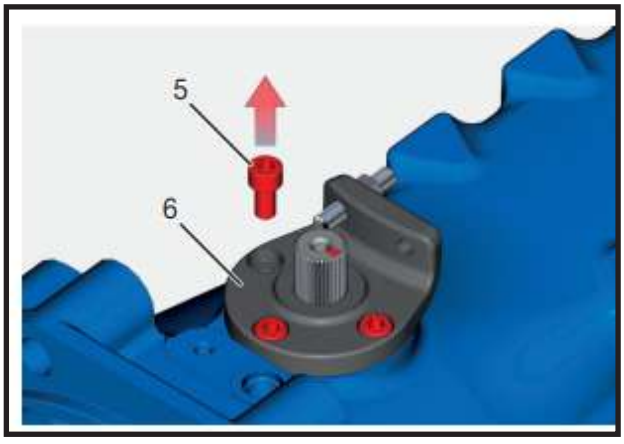

FIGURE 5: Loosen and remove the bushing (**6**) capscrews (**5**).

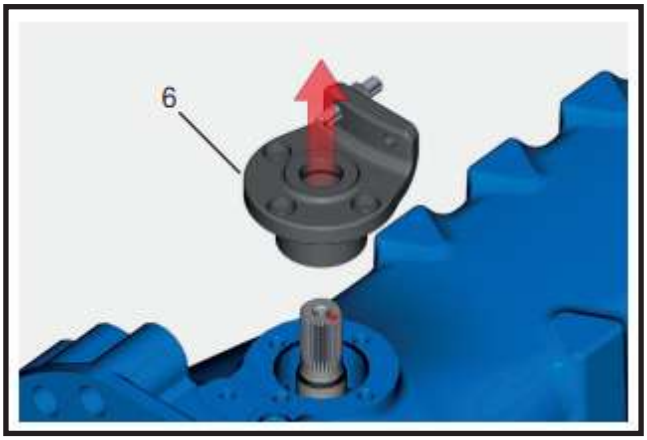

FIGURE 6: ONLY FOR VERSION “A”

Remove the bushing (**6**) with o-rings (**7, 19**).

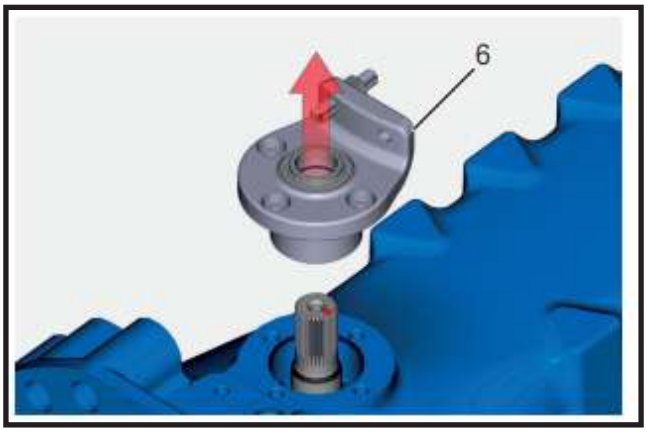

FIGURE 7: ONLY FOR VERSION “B”

Remove the bushing (**6**) with o-rings (**7, 19**).

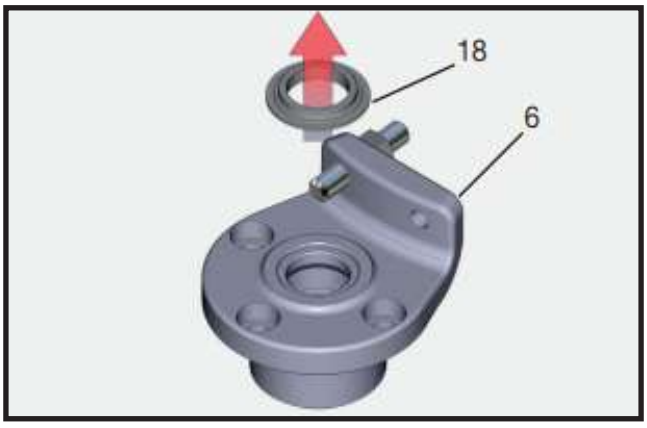

FIGURE 8: ONLY FOR VERSION “B”

Remove the bushing (**18**) from the bushing (**6**).

CAUTION

Remove any Loctite residue.

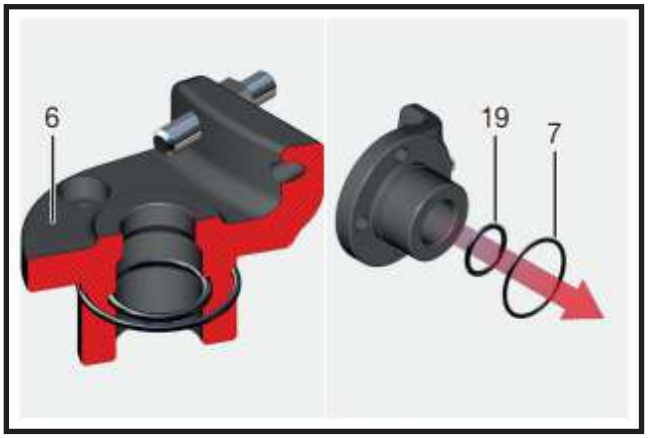

FIGURE 9: Remove the o-rings (**7, 19**) from the bushing (**6**).

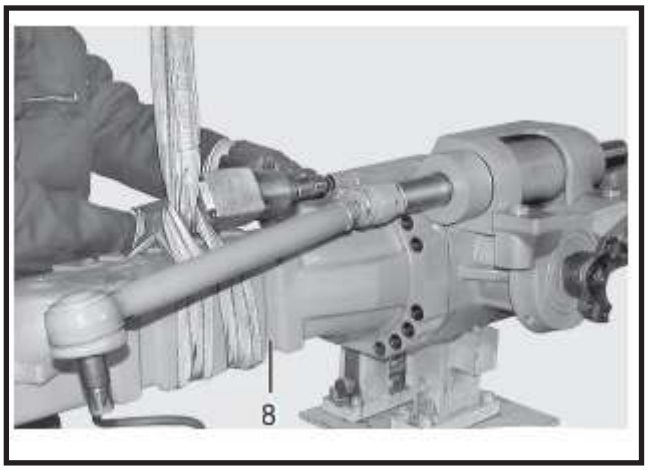

FIGURE 10: Connect the complete arm (**8**) to the hoist and put the rod under light tension. Remove the complete arm.

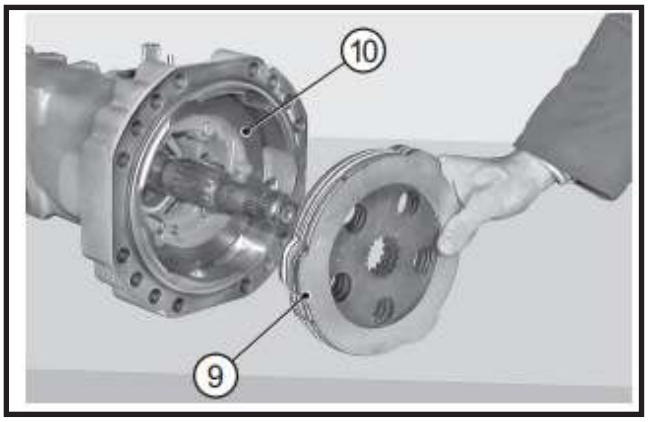

FIGURE 11: Remove the braking disks (**9**) and the complete piston (**10**).

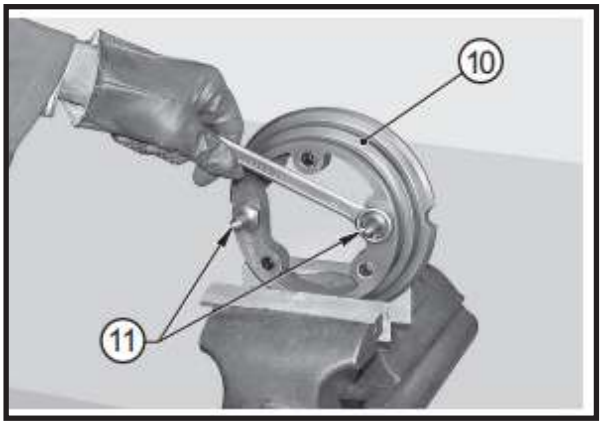

FIGURE 12: If pins (**11**) need replacing, block the piston (**10**) into a vice whose jaws are covered in smooth material and remove the pins.

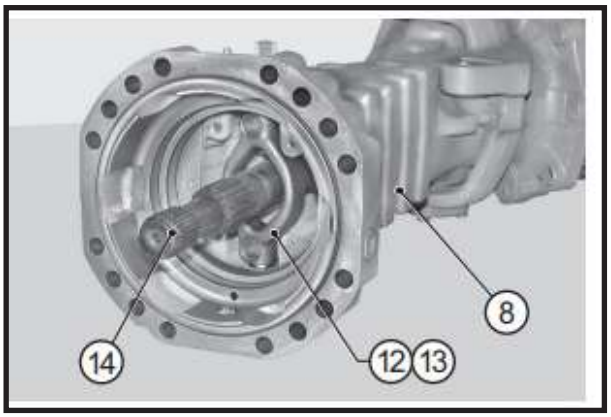

FIGURE 13: If thrust levers (**12**, **13**) need replacing, remove the U-joint (**14**) before removing the arms (**8**).

Assembly

WARNING

Care should be exercised to avoid skin rashes, fire hazards, and inhalation of vapors when using solvent type and alkali cleaners.

Clean all parts thoroughly using solvent type cleaning fluid. It is recommended that parts be immersed in cleaning fluid and agitated slowly until parts are thoroughly cleaned of all old lubricants and foreign materials.

Thoroughly dry all cleaned parts immediately by using moisture-free compressed air or soft lint-free absorbent wiping rags free of abrasive materials such as metal filings, contaminated oil, or lapping compound.

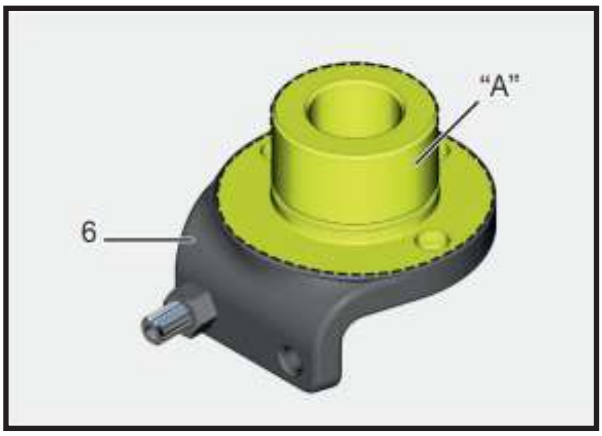

FIGURE 14: Using a lint-free cloth carefully clean the yellow highlighted bushing (**6**) outer surfaces "A". Carefully clean the complete bushing (**6**).

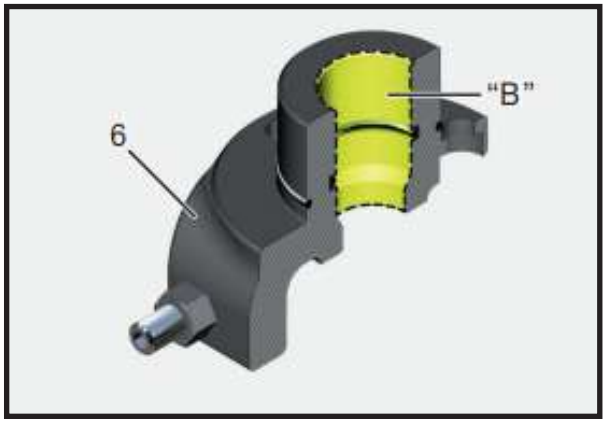

FIGURE 15: Using a lint-free cloth carefully clean the yellow highlighted bushing (**6**) inner surfaces "B". Carefully clean the complete bushing (**6**).

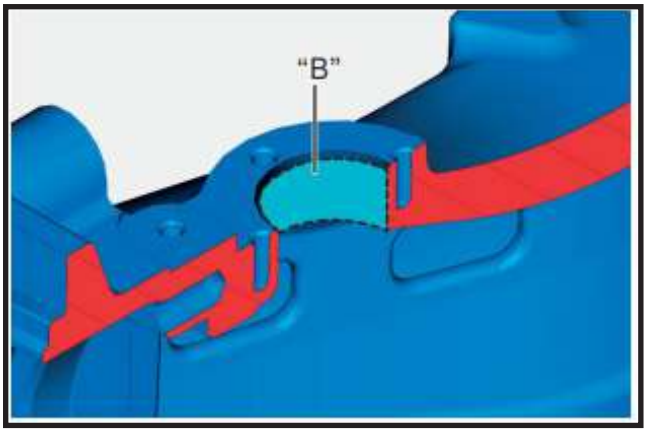

FIGURE 16: Using a lint-free cloth carefully clean the highlighted contact surfaces "B" on the arm. Remove and dispose the lint-free cloth.

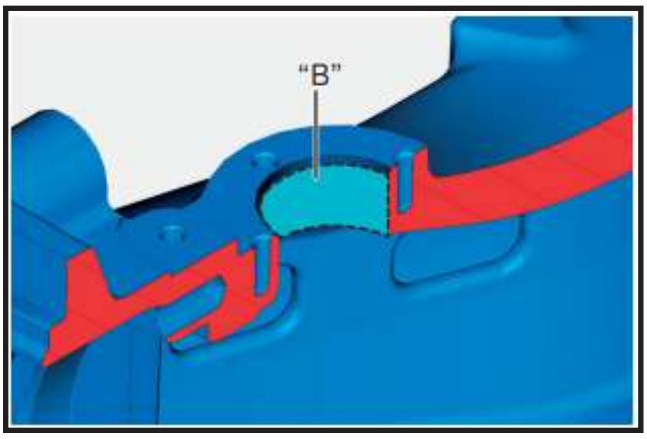

FIGURE 17: Accurately lubricate the "B" highlighted surfaces with Castrol Molub-Alloy Paste TA grease.

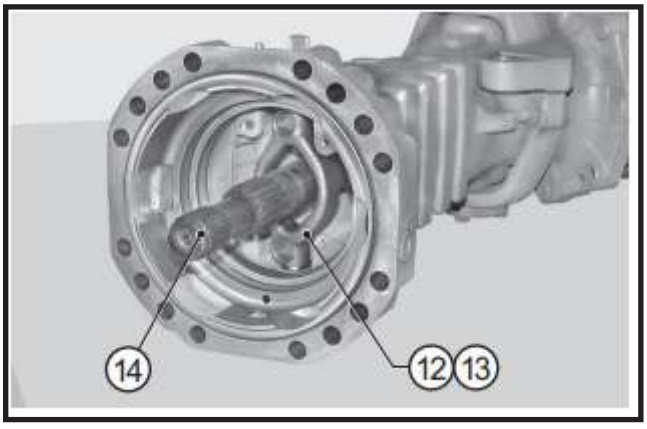

FIGURE 18: Install thrust levers (**12, 13**), then install the double U-joint (**14**).

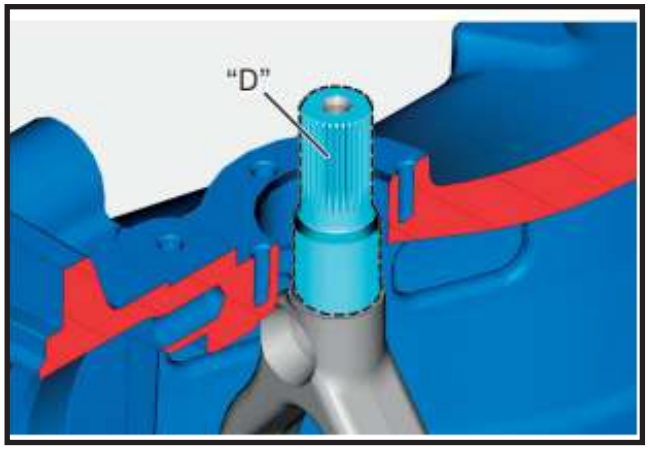

FIGURE 19: Accurately lubricate the cyan highlighted surfaces "D" with Castrol Molub-Alloy Paste TA grease.

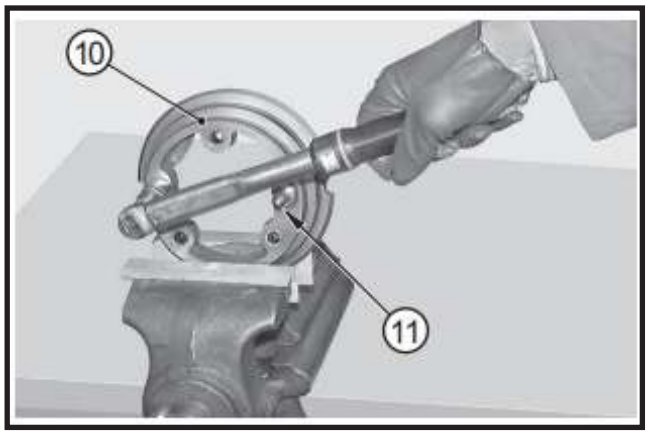

FIGURE 20: Apply Loctite 270 to the threaded portion of the pins (**11**) and fit them onto the piston (**10**). Block them: torque wrench setting 22-26 ft-lb (30 - 35 N·m).

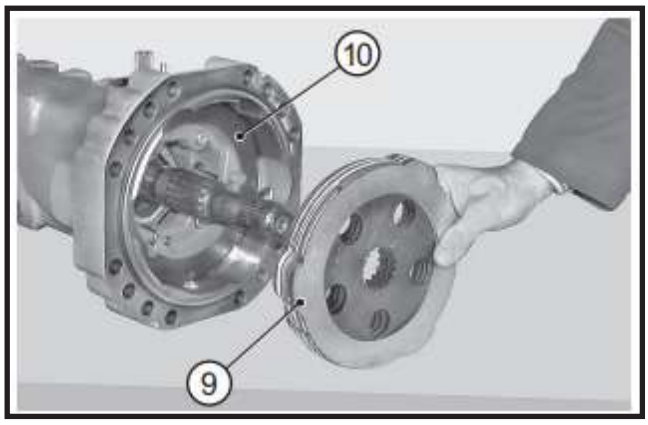

FIGURE 21: Re-install the piston (**10**) and the braking disks (**9**).

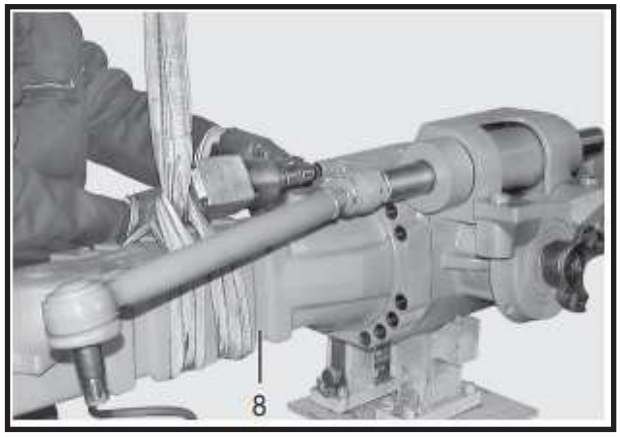

FIGURE 22: Install the arms (**8**) into the main body; check flatnessand block arms following the appropriate procedures illustrated in section HYDRAULIC NEGATIVE BRAKE.

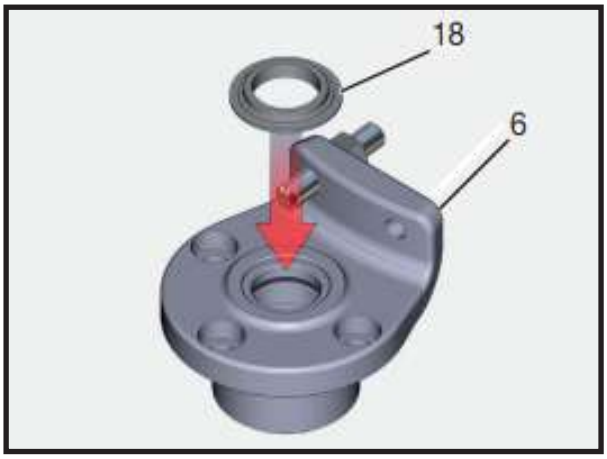

FIGURE 23: ONLY FOR VERSION "B" If disassembled, spread the surface with Loctite 270 as shown in picture, and install the bushing (**18**) in its seat.

CAUTION

Wait 2 hours before install it. Remove any Loctite residue.

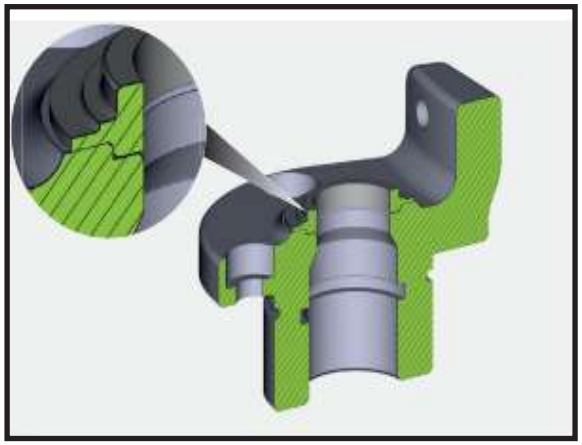

FIGURE 24: Installation detail.

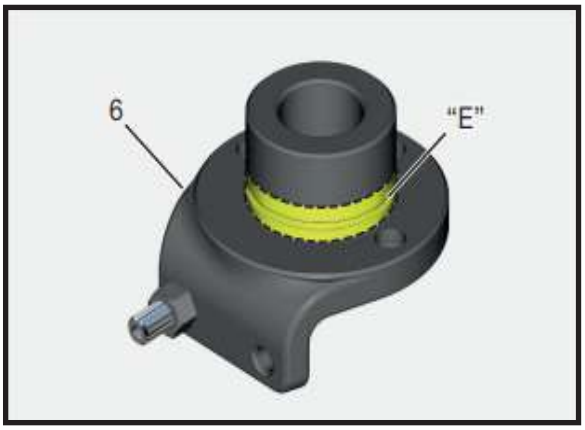

FIGURE 25: Accurately lubricate the yellow highlighted bushing (**6**) surfaces "E" with Castrol Molub-Alloy Paste TA grease.

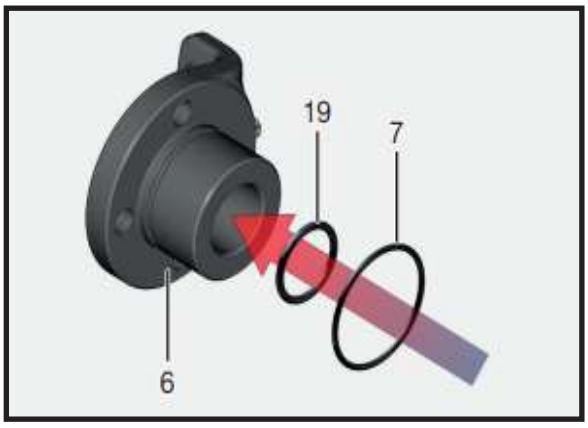

FIGURE 26: Assemble the new o-rings (**7, 19**) in the bushing slots (**6**).

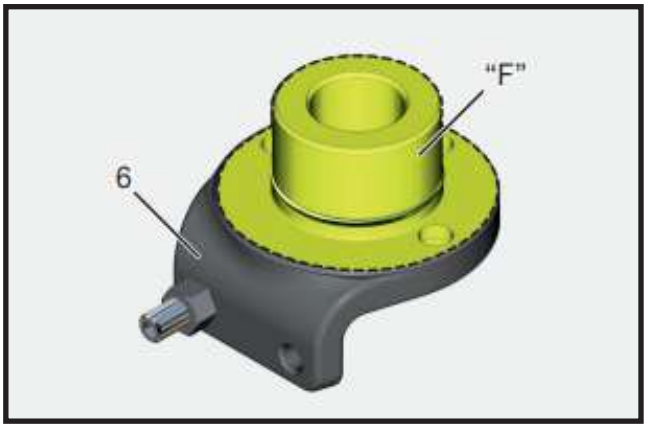

FIGURE 27: Accurately lubricate the outer yellow highlighted bushing (**6**) surfaces "F" and the new o-rings (**7, 19**) with Castrol Molub-Alloy Paste TA grease.

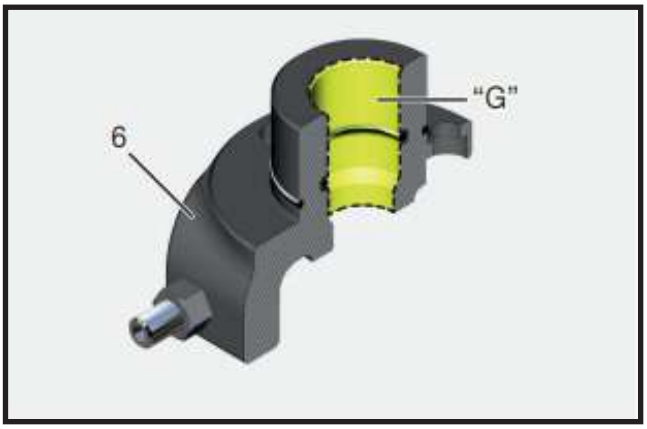

FIGURE 28: Accurately lubricate the inner yellow highlighted bushing (**6**) surfaces "G" with Castrol Molub-Alloy Paste TA grease.

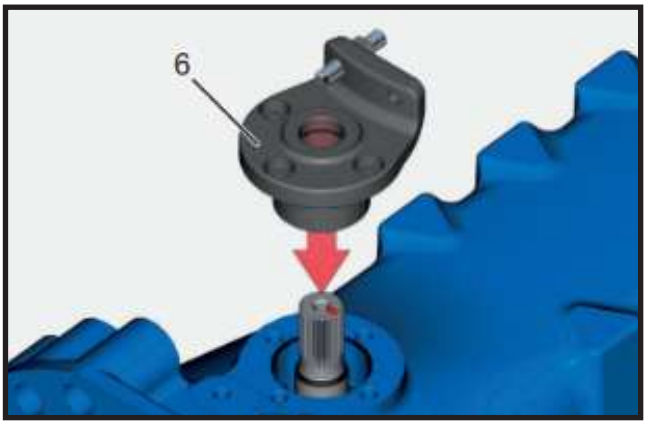

FIGURE 29: Install the bushing (**6**) complete with o-rings (**7, 19**) and block it with screws (**5**).

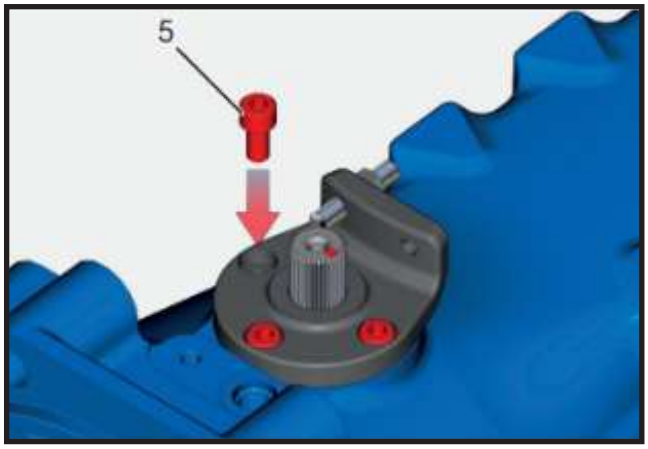

FIGURE 30: Tighten screws (**5**) with a torque wrench setting of 17-19 ft-lb (23,8 - 26,2 N·m).

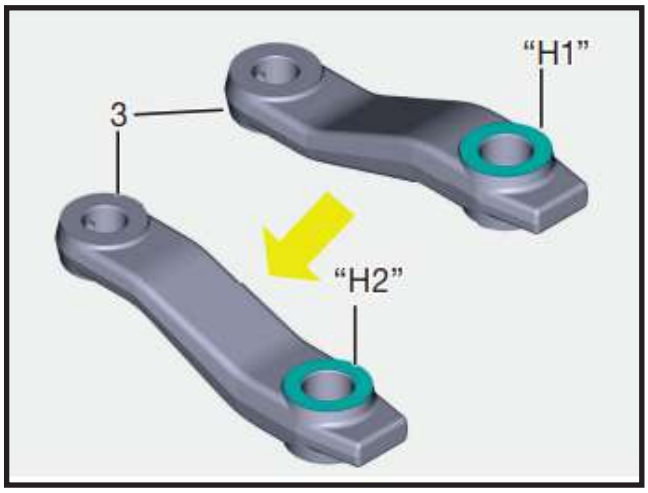

FIGURE 31: Accurately lubricate the cyan highlighted surface "H1" and "H2" of the lever (**3**) with Castrol Molub-Alloy Paste TA grease.

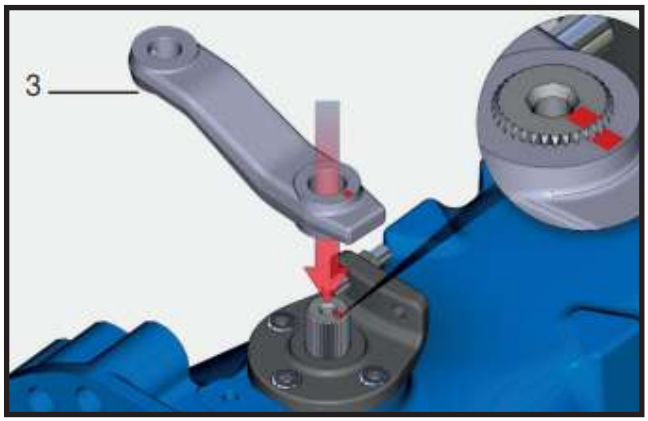

FIGURE 32: ONLY FOR VERSION "A" Assembly the lever on the thrust lever minding the previously marked assembly position.

CAUTION

Refer to the positions marked during disassembly and keep them.

Mind the positions of the levers (**3**) in relation to the thrust levers (**12, 13**).

Mind the assembly direction of the levers (UPPER SIDE).

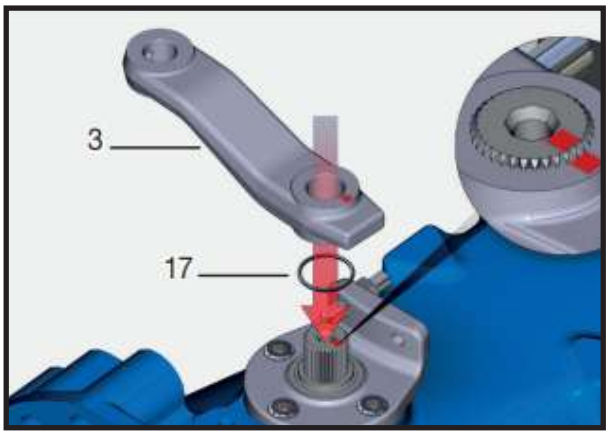

FIGURE 33: ONLY FOR VERSION "B" Assembly the o-ring (**17**) on the bushing (**18**). Assembly the lever (**3**) on the thrust lever (**12**, **13**) minding the previously marked assembly position.

CAUTION

Refer to the positions marked during disassembly and keep them.

Mind the positions of the levers (**3**) in relation to the thrust levers (**12**, **13**).

Mind the assembly direction of the levers (UPPER SIDE).

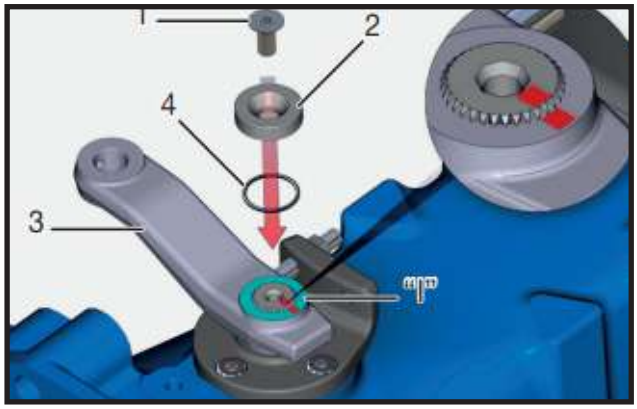

FIGURE 34: Accurately lubricate the cyan highlighted surface “I” of the lever (**3**) with Castrol Molub-Alloy Paste

TA grease. Lubricate the new o-ring (**4**) with Castrol Molub-Alloy Paste TA grease.

Assembly the new o-ring (**4**) in the washer (**4**). Assembly the washer (**4**) on the thrust lever (**3**) Lock them with screw (**1**) and tighten it using a torque wrench setting of 17.5-19.3 ft-lb (23,8 - 26,2 N·m).

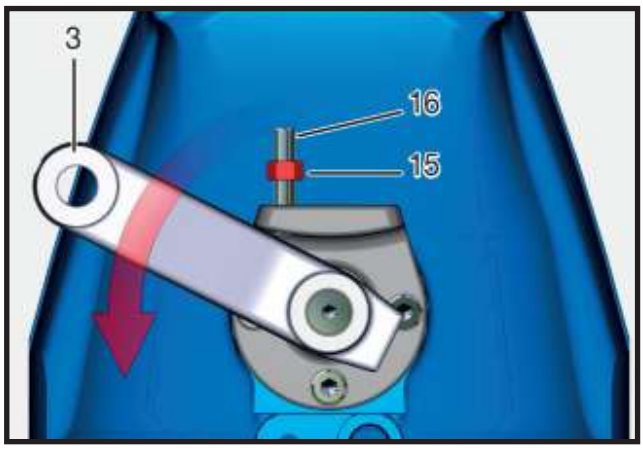

FIGURE 35: Connect the braking circuit and apply maximum working pressure to set the discs (**40**). Release the pressure, loosen nut (**15**) and unscrew stud (**16**) by a few turns.

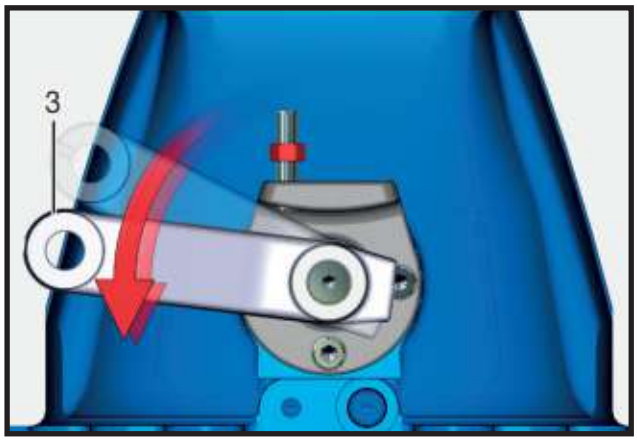

FIGURE 36: Apply a force of 8 - 10 N (0.8 - 1 kg / 1.7 – 2.2 lb.) to lever (**15**) at a distance of ~3.15 in. (80 mm) from the lever fulcrum (see picture below).

Direct the force towards the braking direction in order to eliminate the idle stroke.

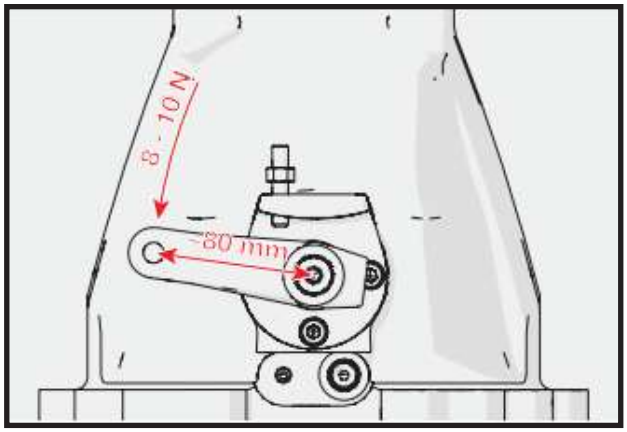

FIGURE 37: Measurement detail.

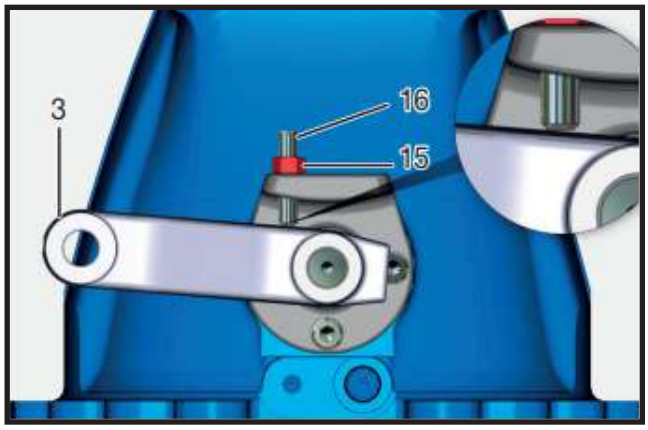

FIGURE 38: While the force of 1.8-2.2 lbf (8 - 10 N) is being applied, tighten stud (**16**) until it is caused to rest onto lever (**15**). Lock stud (**16**) in this position with nut (**15**). Torque wrench setting: 14.8-18.4 ft-lb (20 - 25 N·m).

CAUTION

The idle stroke should be eliminated without preloading thrust levers (**12, 13**).

CAUTION

Refer to the Original Equipment Manufacturer (OEM) manual that came with the vehicle for parking brake cable assembly instructions.

An incorrect assembling may cause a crash or unexpected vehicle movement, resulting in serious injury or death. Parking brake must be properly adjusted before use.

EXTERNAL HYDRAULIC NEGATIVE BRAKE

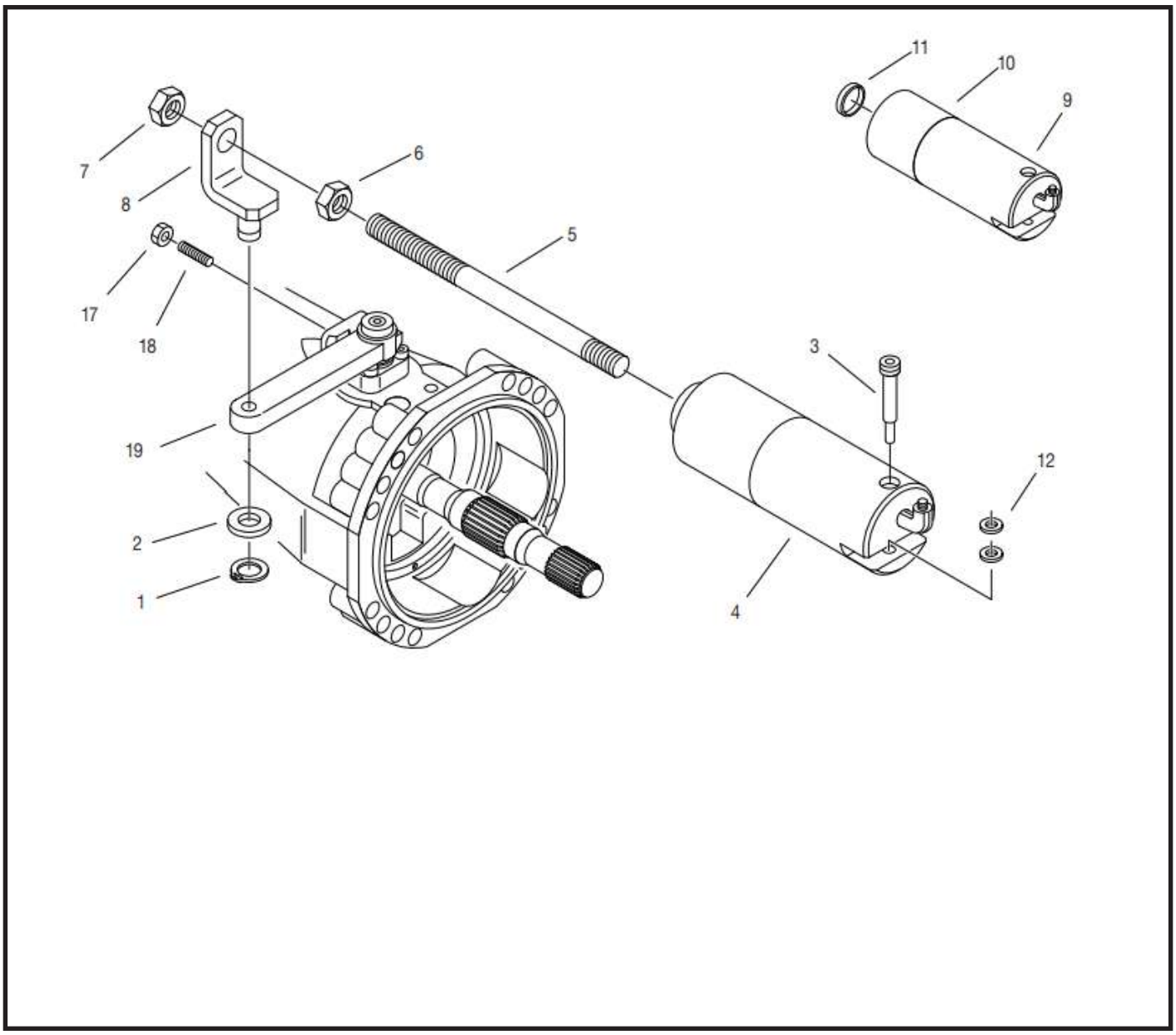

DISASSEMBLY

WARNING

Before maintaining brakes, when the axle is installed on the vehicle, follow all safety instructions in the Original Equipment Manufacturer (OEM) manual that came with the vehicle.

CAUTION

Before draining oil, release the internal pressure.

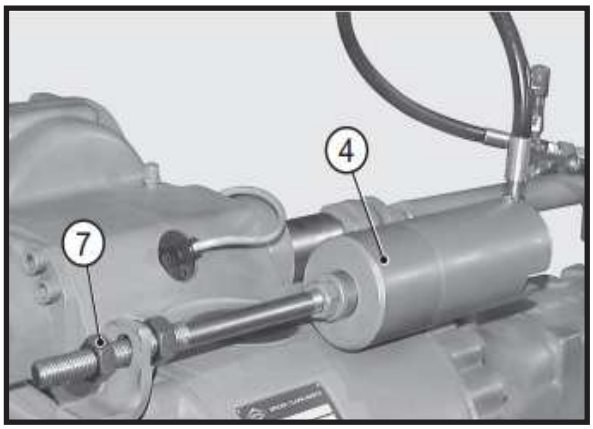

FIGURE 1: Insert pressure into cylinder (**4**) in order to release the brakes.

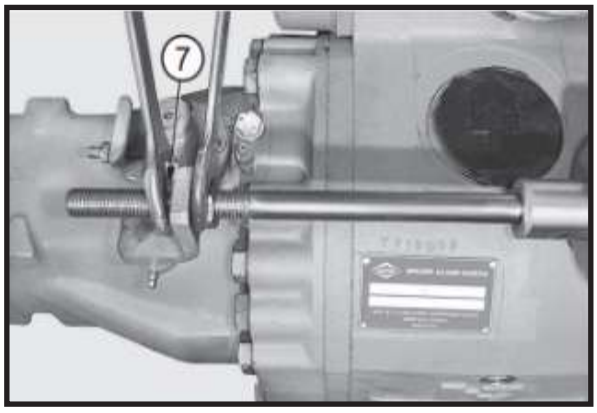

FIGURE 2: Loosen and remove the external nut (**7**).

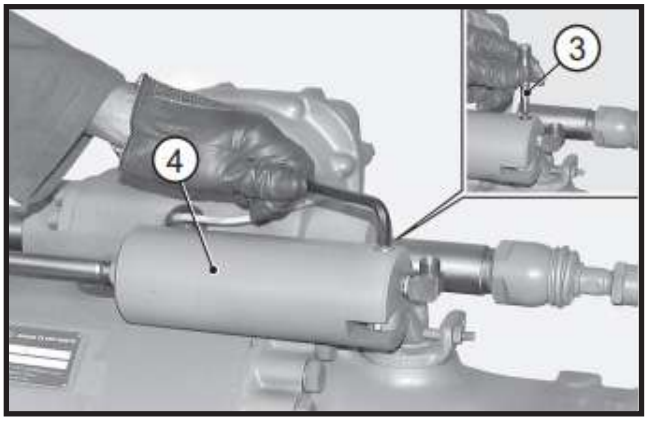

FIGURE 3: Release the pressure in the cylinder and disconnect the pressure delivery tube. Remove the fulcrum pin (**3**) from the cylinder (**4**) complete with washers (**12**).

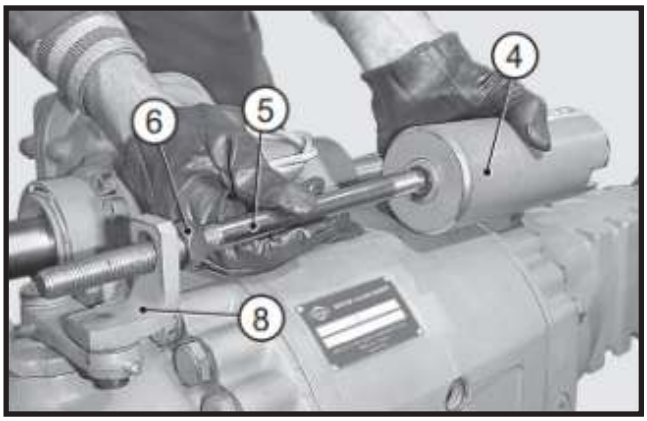

FIGURE 4: Remove the cylinder assembly (**4**) complete with rod (**5**), internal nut (**6**) and support (**8**).

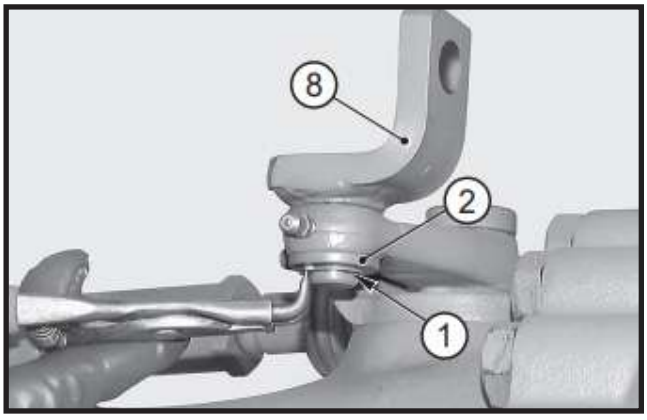

FIGURE 5: Remove the snap ring (**1**) that checks the support (**8**) and remove the spacer (**2**).

CAUTION

Set the pliers following the correct procedure shown in END-STOP PLIER SETTING.

ASSEMBLY

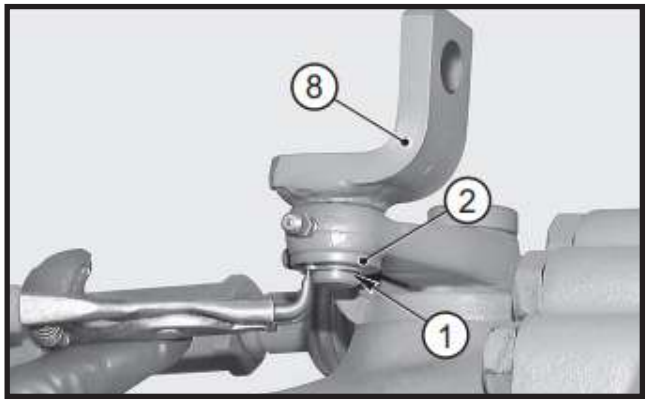

FIGURE 6: Install spacer (**2**) and insert the pin of support (**8**) into the right-hand braking lever. Fit the second spacer (**2**) and snap ring (**1**).

CAUTION

Set the pliers following the correct procedure shown in END-STOP PLIER SETTING.

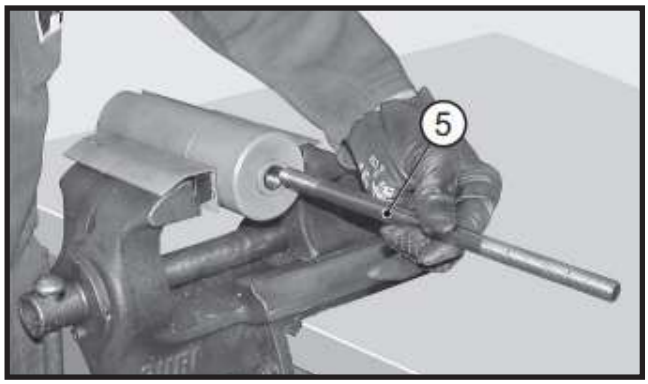

FIGURE 7: Apply Loctite 270 to the rod (**5**) and screw it in the piston (**13**) as far as it will go.

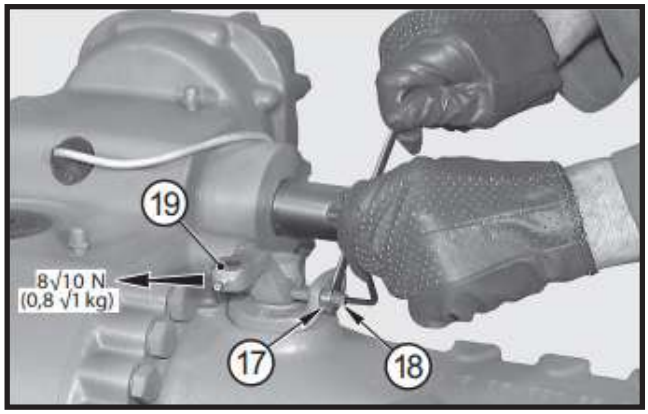

FIGURE 8: Loosen nuts (**17**) and set braking levers (**19**) clearances to zero by turning studs (**18**); lock nuts (**17**) with a torque wrench setting of 4.5-5.6 lbf (20 - 25 N).

CAUTION

Clearances should be set to zero without causing any preloading.

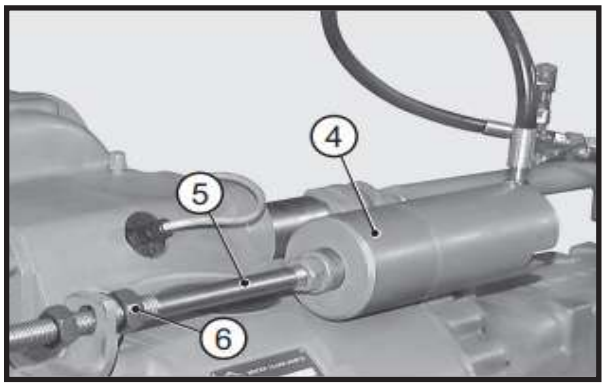

FIGURE 9: Install cylinder (**4**) complete with rod (**5**) and internal nut (**6**).

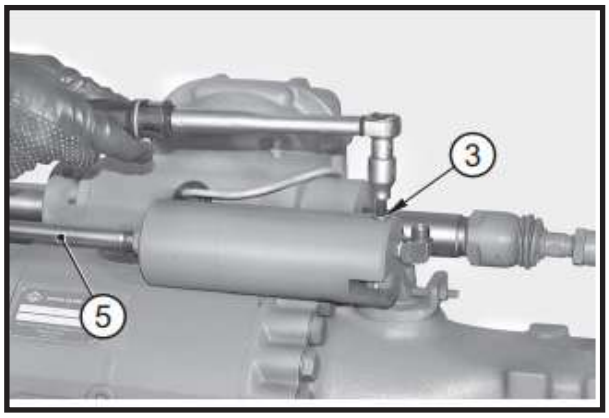

FIGURE 10: Center the hole of fulcrum pin (**3**) and washers (**12**).

Apply Loctite 242 to the pin thread, screw and tighten pin with a torque wrench set at 19-37 ft-lb (25 - 30 N·m).

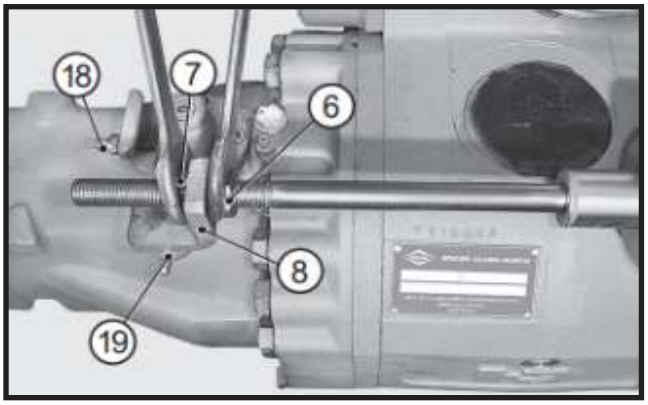

FIGURE 11: Introduce pressure into the cylinder (**4**) and while holding both levers (**19**) back against the adjusting screws (**18**), move nuts (**6, 7**) so that they are made to rest against support (**8**); lock the nuts with a torque wrench setting of 36.8-44.2 ft-lb (50 - 60 N·m).

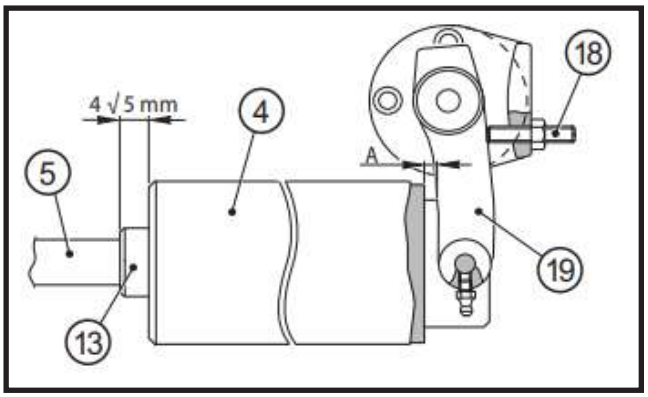

FIGURE 12: Check that, when the brakes are released (pressure inserted), levers (**19**) lean against the screws (**18**) without pre-stressing them and make sure that a clearance “A” is left between cylinder (**4**) and lever (**19**). Also check that when pressure is released, piston (**13**) projects out by 0,16 – 0,2 in (4 - 5 mm).

EXTERNAL HYDRAULIC NEGATIVE BRAKE WITH QUICK RELEASE

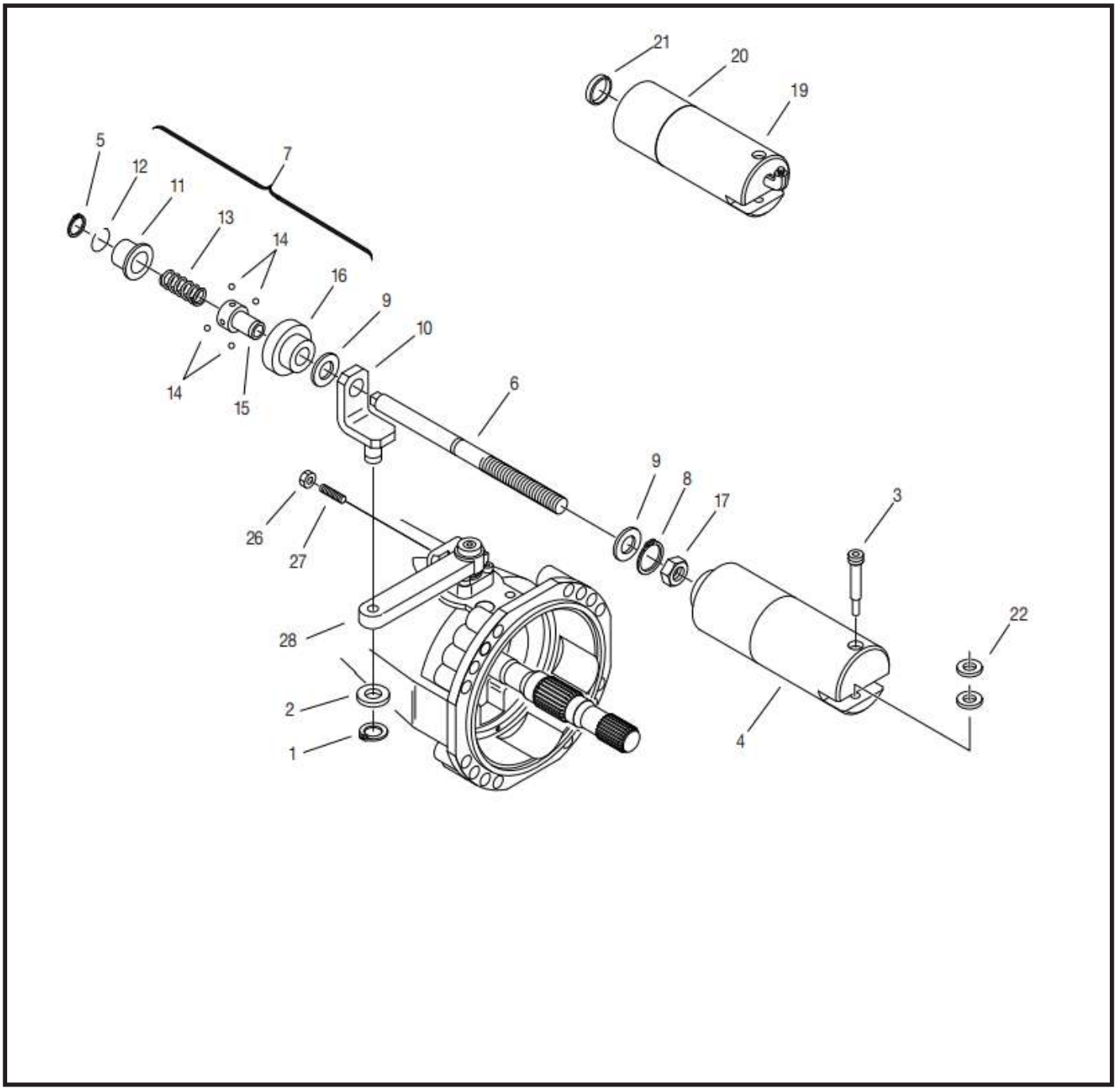

Disassembly

WARNING

Before maintaining brakes, when the axle is installed on the vehicle, follow all safety instructions in the Original Equipment Manufacturer (OEM) manual that came with the vehicle.

CAUTION

Before draining oil, release the internal pressure.

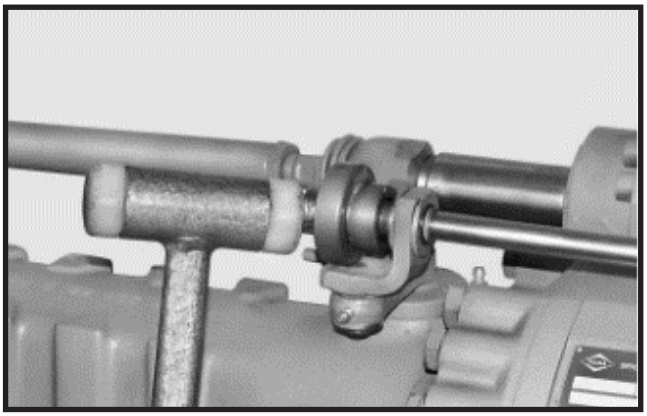

FIGURE 1: Before starting any operation on the assembly, disable the cylinder by giving a light hammer blow to the external ring of the check unit.

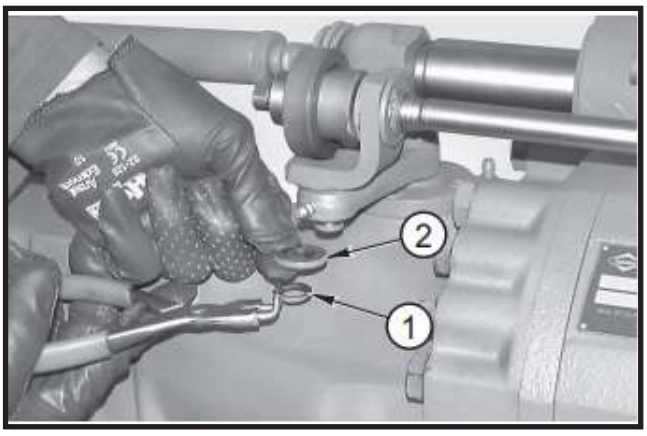

FIGURE 2: Remove snap ring (**1**) and extract spacer (**2**).

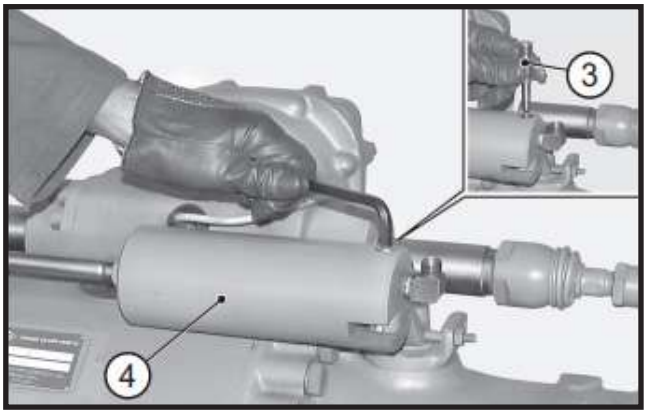

FIGURE 3: Remove the fulcrum pin (**3**) from the cylinder (**4**) complete with washers (**22**).

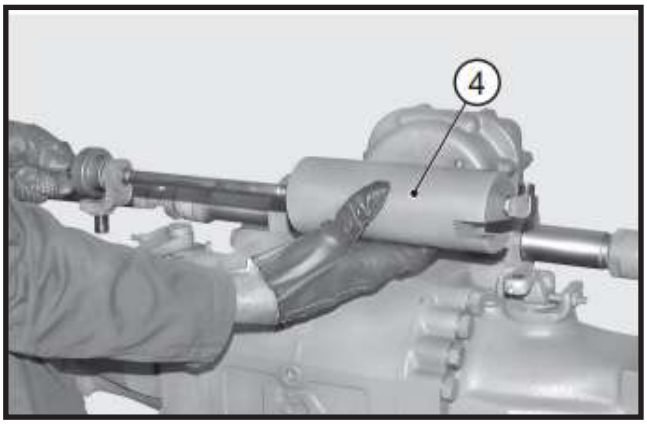

FIGURE 4: Remove the complete cylinder set (**4**).

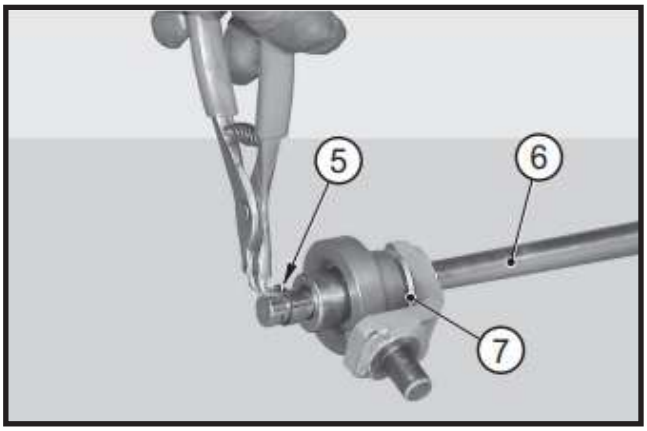

FIGURE 5: Remove snap ring (**5**) from stem (**6**) and extract the check unit (**7**).

CAUTION

Set the pliers following the correct procedure shown in END-STOP PLIER SETTING.

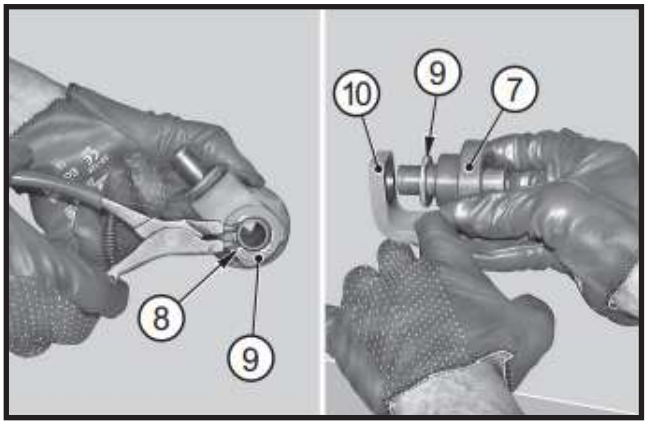

FIGURE 6: Remove snap ring (**8**) and washer (**9**) and separate support (**10**) and second washer (**9**) from the check unit (**7**).

!	CAUTION
Set the pliers following the correct procedure shown in END-STOP PLIER SETTING.	

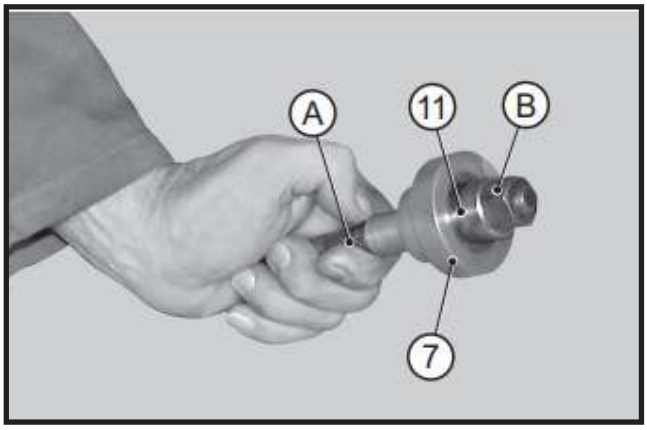

FIGURE 7: Introduce an M14x100 screw “A” into the hole of the check unit (**7**) and screw a nut “B” until the spring seat (**11**) is moved to the end of stroke.

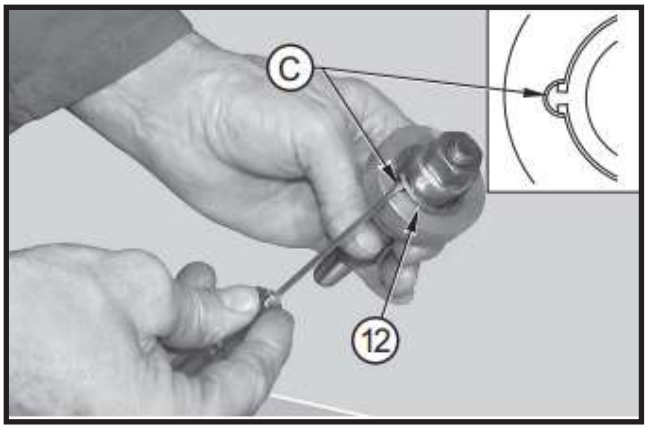

FIGURE 8: Rotate snap ring (**12**) until ring ends match slot “C”.

Remove snap ring (**12**).

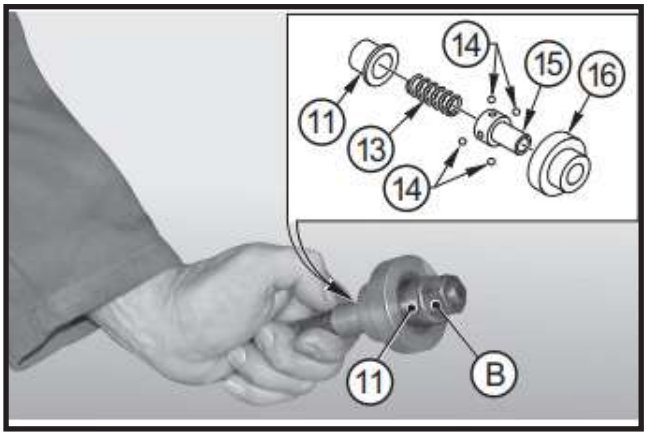

FIGURE 9: Slowly release nut “B” and disassemble the check unit.

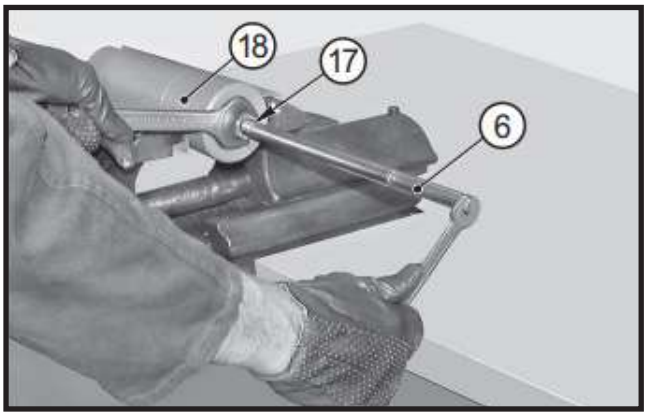

FIGURE 10: Loosen nut (**17**) and remove stem (6) from the cylinder (**18**).

1.1.1.1. Assembly

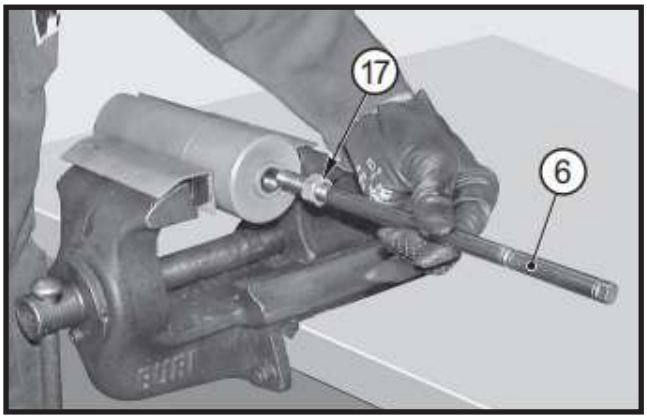

FIGURE 11: Screw stem (**6**) into the piston without locking the nut (**17**).

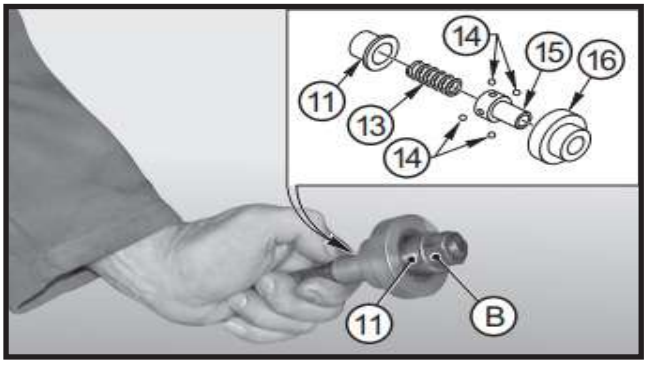

FIGURE 12: Assemble the check unit (**7**) by inverting the steps followed in the disassembly procedure.

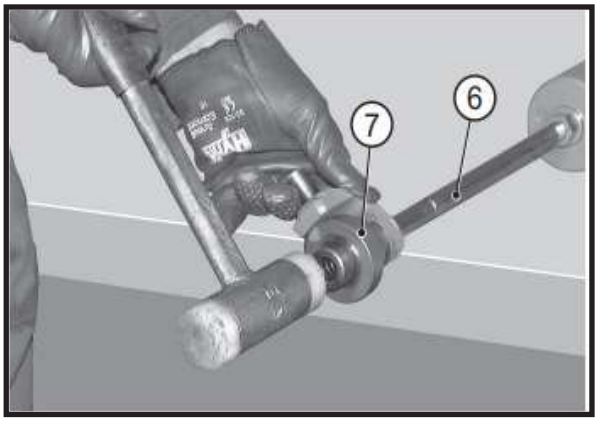

FIGURE 13: Using a plastic hammer, install the check unit (**7**) onto the stem (**6**).

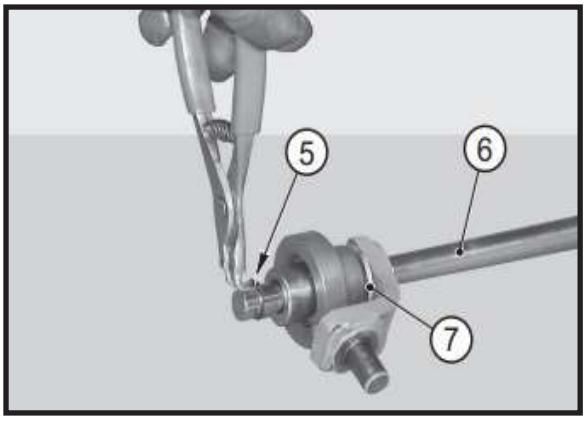

FIGURE 14: Fit the safety snap ring (**5**) onto the stem (**6**).

CAUTION

Set the pliers following the correct procedure shown in END-STOP PLIER SETTING.

CAUTION

In case the braking disks have been replaced or if brake pistons have been removed: before adjusting the negative braking unit, apply the brakes several times at maximum pressure in order to set clearances.

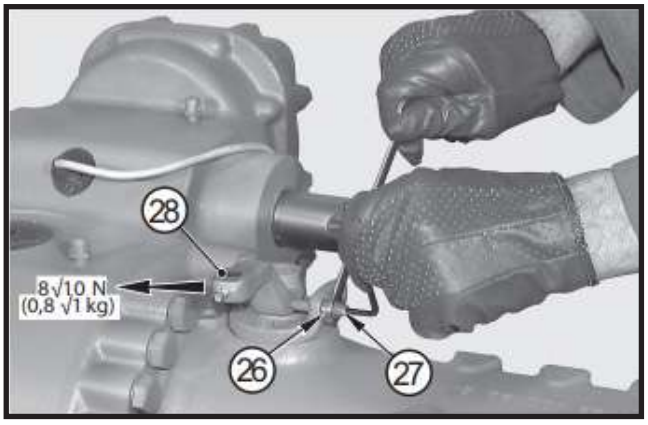

CAUTION

The idle stroke should be eliminated without causing any preloading.

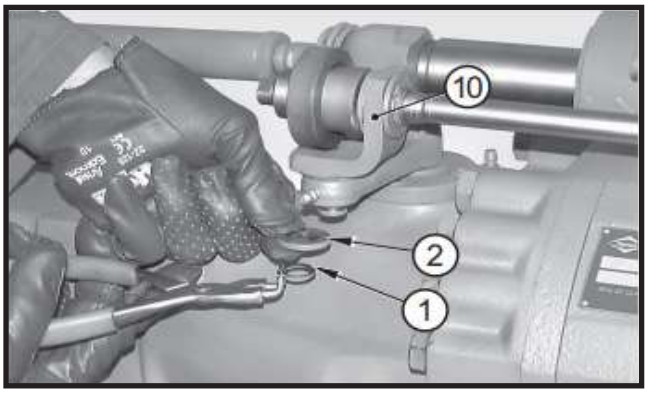

FIGURE 16: Fit the spacer (**2**) and insert the pin of support (**10**) in the right-hand braking lever. Fit the snap ring (**1**).

CAUTION

Set the pliers following the correct procedure shown in END-STOP PLIER SETTING.

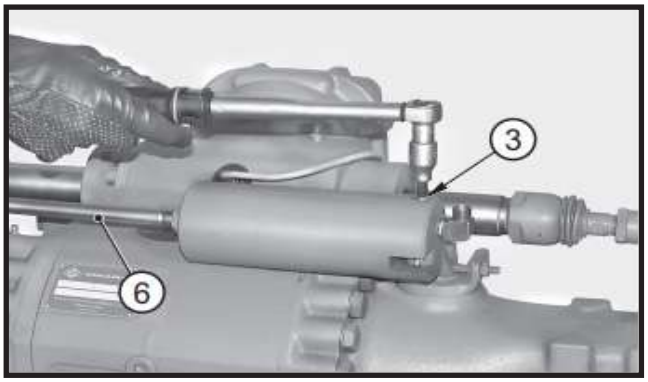

FIGURE 17: Rotate stem (**6**) to center the hole of the fulcrum pin (**3**). Apply Loctite 242 to the thread of the fulcrum pin (**3**), screw and tighten pin with a torque wrench set to 18-22 ft-lb (25 - 30 N·m).

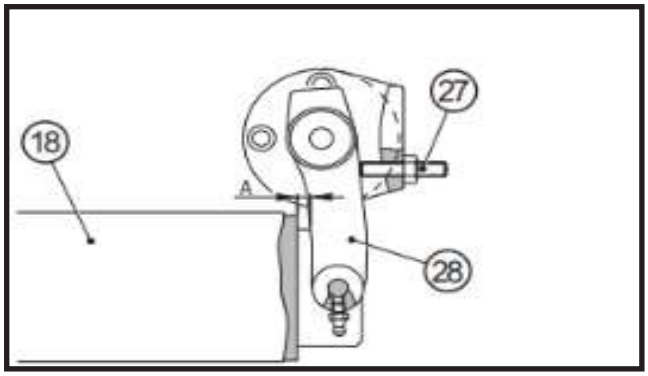

FIGURE 18: Check that a clearance “A” is left between the lever (**28**) on the cylinder side (resting against the adjustment stud) and cylinder (**18**). If necessary, remove the lever, turn it by one tooth in relation to the spline and repeat idle stroke elimination procedure.

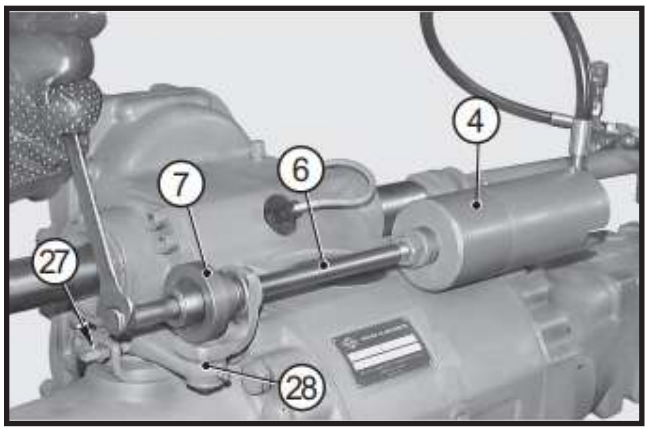

FIGURE 19: Introduce pressure into the cylinder (**4**) and, with the levers (**28**) resting against the adjustment studs (**27**), screw rod (**6**) to engage the quick release (**7**) in the slot.

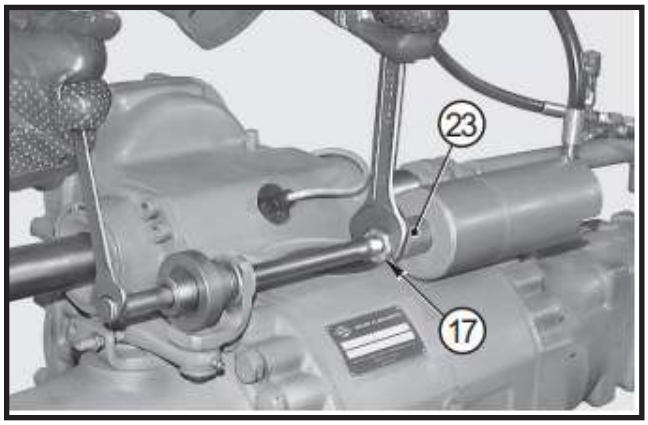

FIGURE 20: Lock nut (**17**) in position against the stem of the piston (**23**). Torque wrench setting for the nut: maximum 29 ft-lb (40 N·m).

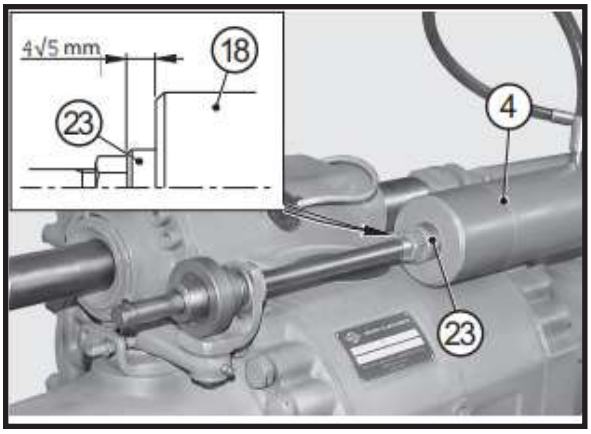

FIGURE 21: Release the pressure and check that piston (**23**) returns and stops in a position where it projects out from the cylinder head (**4**) by 0,16 – 0,2 in (4 - 5 mm).

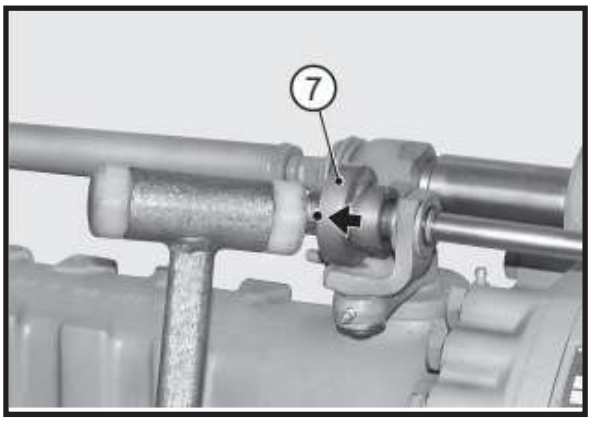

FIGURE 22: Release the check unit (**7**) by giving a hammer blow to the external ring. Introduce pressure again and check that at the end of piston stroke, the check unit (**7**) is actually engaged onto the rod (**6**).

INCOMING DRUM BRAKE

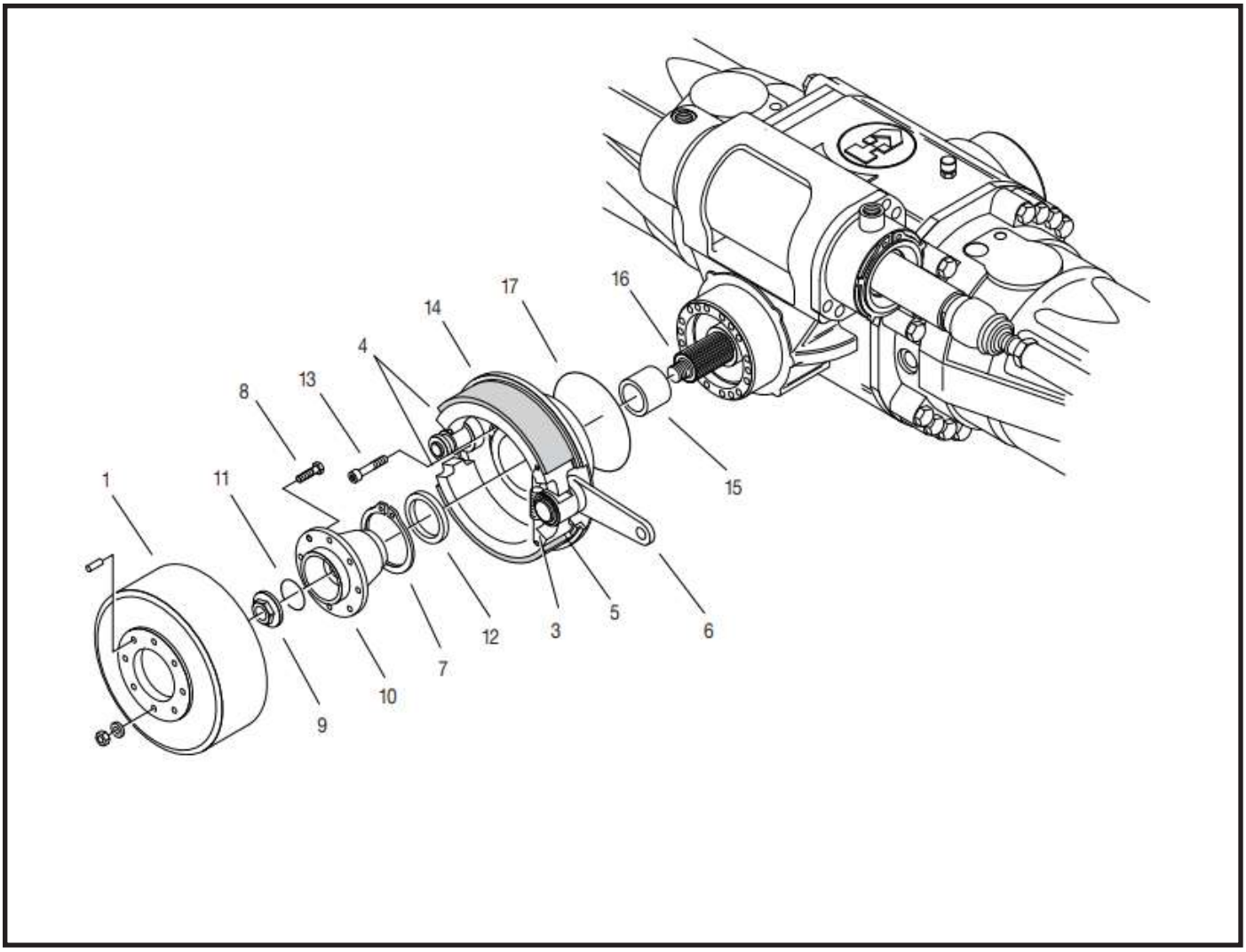

Disassembly

WARNING

Before maintaining brakes, when the axle is installed on the vehicle, follow all safety instructions in the Original Equipment Manufacturer (OEM) manual that came with the vehicle.

CAUTION

Before draining oil, release the internal pressure.

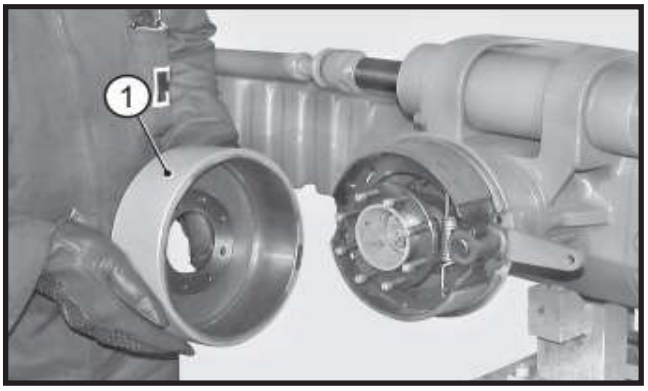

FIGURE 1: Pull out the drum (**1**) and remove dust from friction surfaces.

CAUTION

Use only brush-type vacuum cleaners.

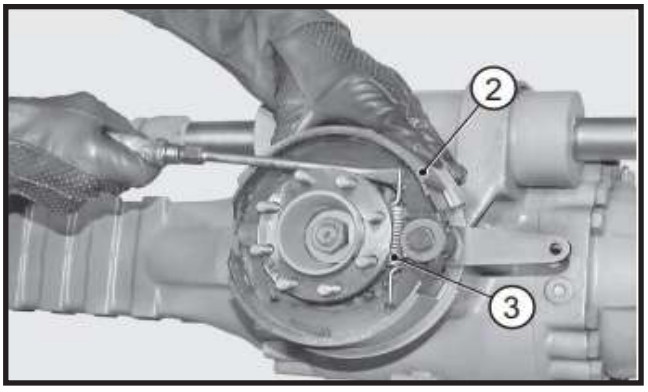

FIGURE 2: Hold the upper shoe into position (**2**) and release the spring (**3**).

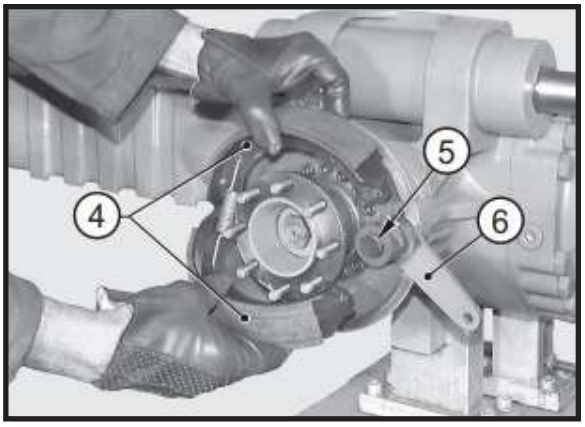

FIGURE 3: Remove the shoe assembly (**4**). If necessary, remove the snap ring (**5**) and pull out the lever (**6**).

CAUTION

Set the pliers following the correct procedure shown in END-STOP PLIER SETTING.

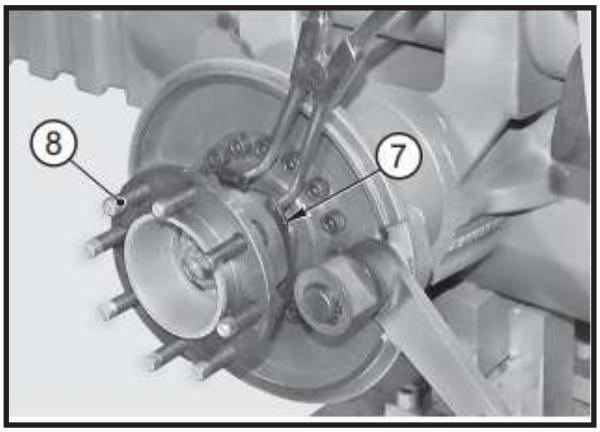

FIGURE 4: Remove the snap ring (**7**) from its seat around the screws (**8**).

Remove the screws (**8**).

CAUTION

Set the pliers following the correct procedure shown in END-STOP PLIER SETTING.

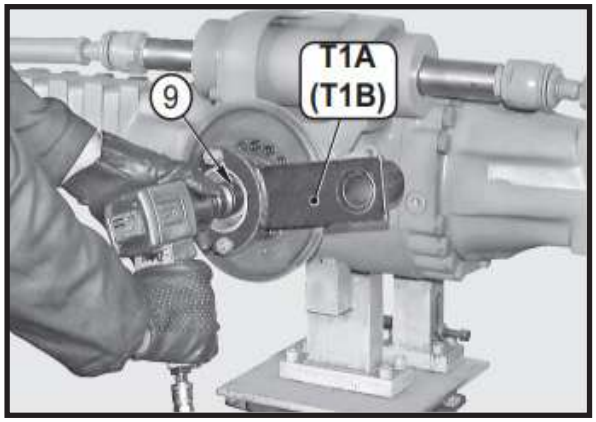

FIGURE 5: Fit tool T1A (or T1B), engage the stop rod and loosen the check nut (**9**) of the flange (**10**).

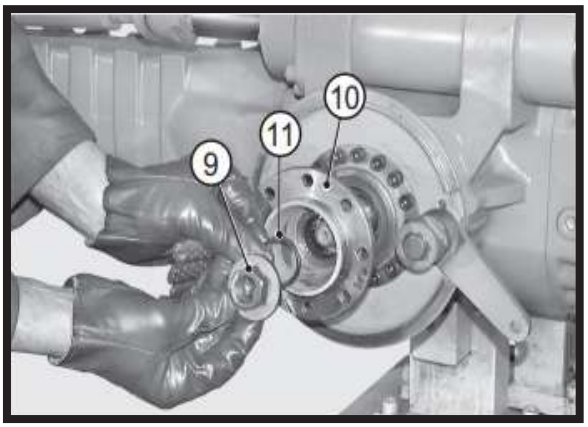

FIGURE 6: Remove parts in the following sequence: nut (**9**), o-ring (**11**), flange (**10**) and stop ring (**7**).

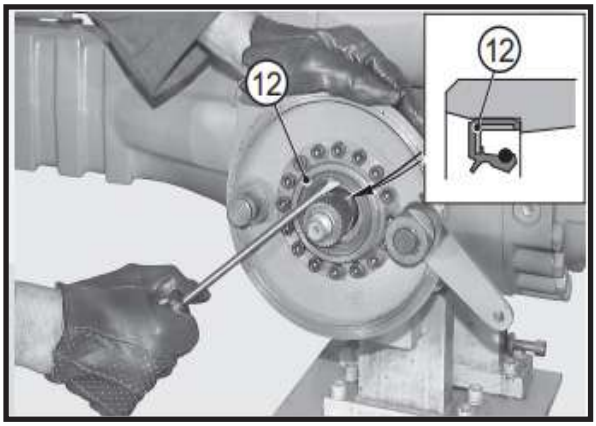

FIGURE 7: Remove the seal (**12**) and discard it.

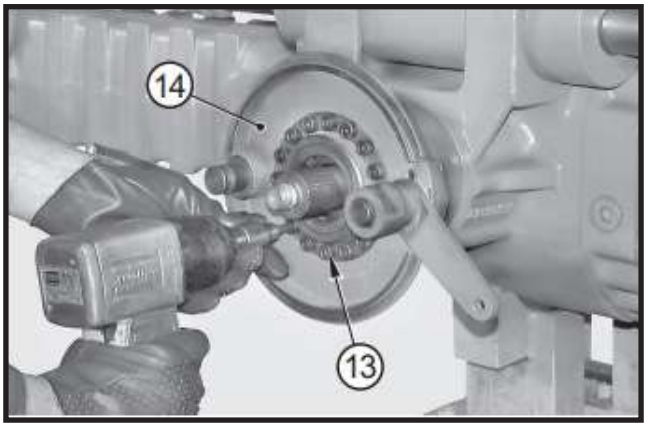

FIGURE 8: Remove the securing screws (**13**) from brake support (**14**).

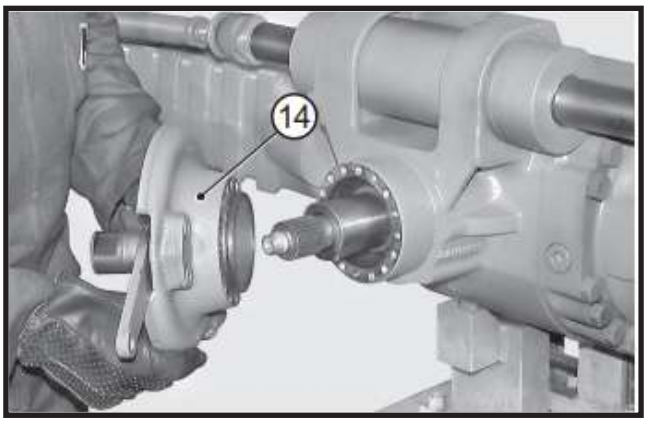

FIGURE 9: Remove brake support (**14**).

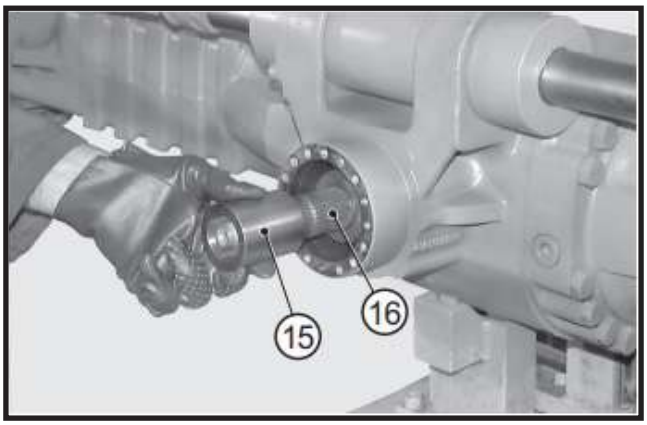

FIGURE 10: Remove the spacer (**15**).

Assembly

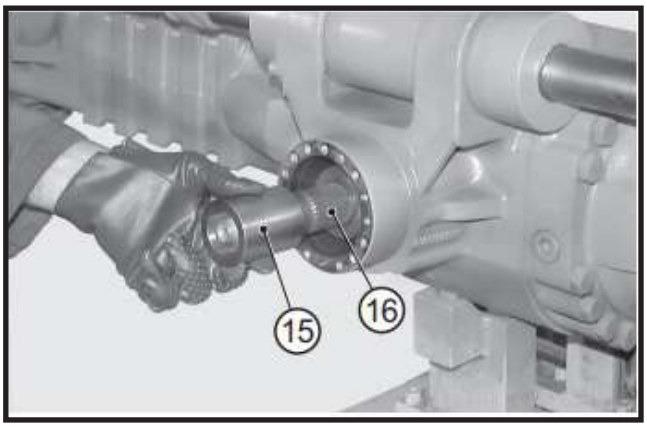

FIGURE 11: Fit the spacer (**15**) onto the pinion (**16**).

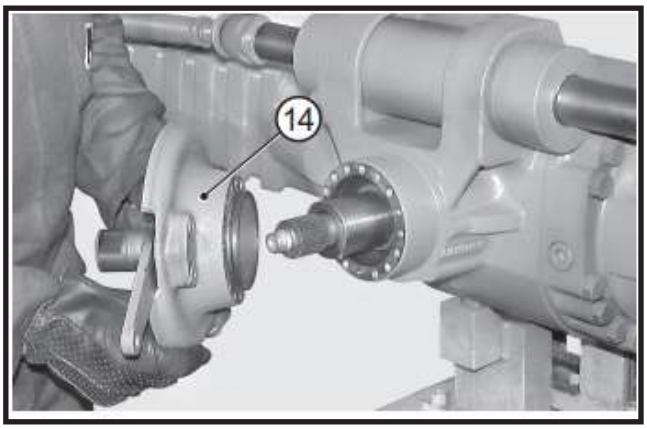

FIGURE 12: Lubricate the coupling surfaces and position brake support (**14**).

Check that the o-ring (**17**) is intact.

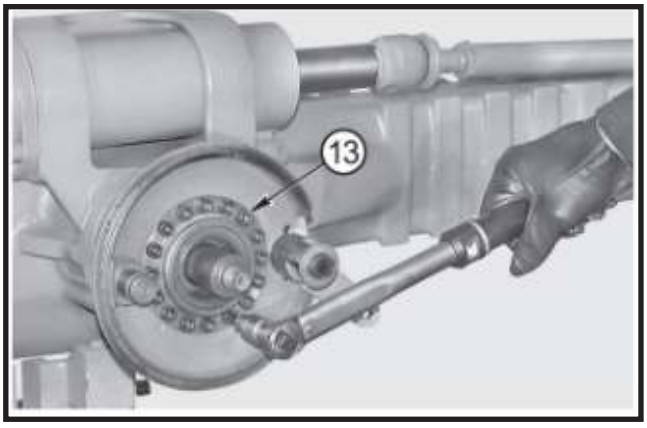

FIGURE 13: Apply Loctite 242 to the screws (**13**) and tighten using the criss-cross method. Torque wrench setting: 25-28 ft-lb (34.2 - 37.8 N·m).

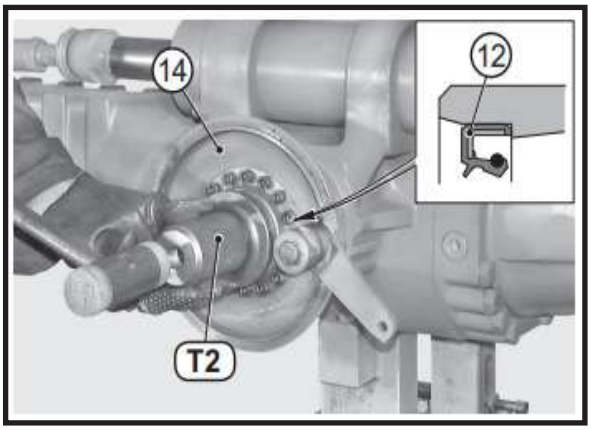

FIGURE 14: Lubricate the outer part of the seal (**12**) and insert it into the brake support (**14**) using tool T2.

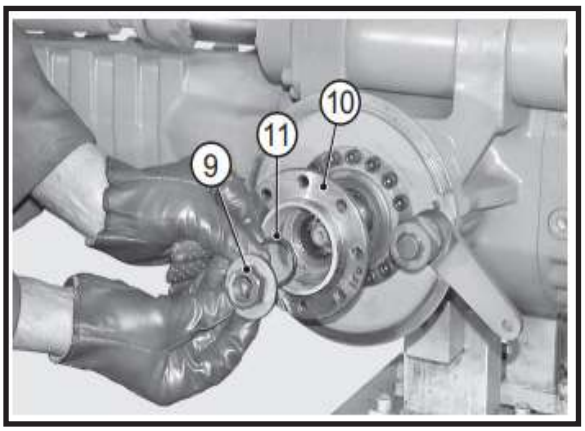

FIGURE 15: Install parts in the following sequence: flange (**10**), o-ring (**11**) and nut (**9**). Spread Loctite 242 on the threaded portion of the pinion (**16**).

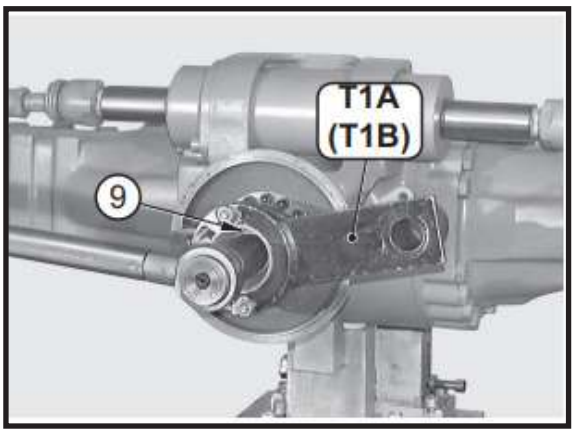

FIGURE 16: Fit tools T1A (See drawing T1 p. 152) (or T1B), engage the stop rod and tighten the nut (**9**). Torque wrench setting: 206-229 ft-lb (280 - 310 N·m).

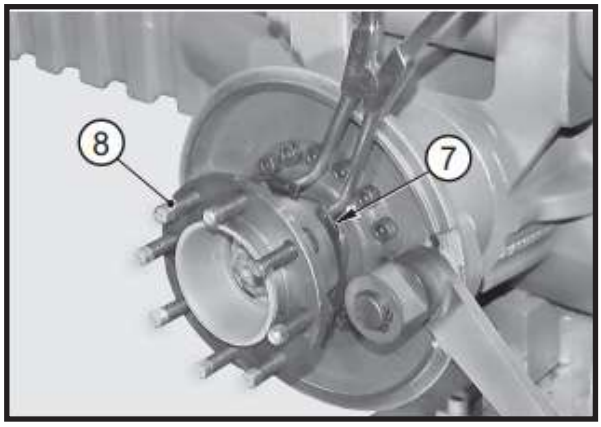

FIGURE 17: Insert the screws (**8**) and hold them in position with the snap ring (**7**).

CAUTION

Set the pliers following the correct procedure shown in END-STOP PLIER SETTING.

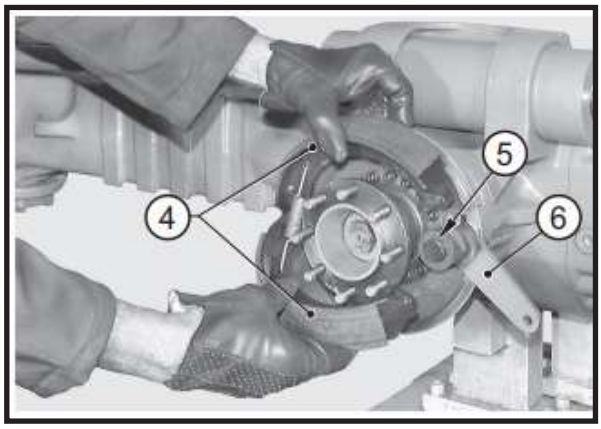

FIGURE 18: If the lever (**6**) has been removed, install it and hold it in position with the snap ring (**5**). Fit the shoes assembly (**4**).

CAUTION

Set the pliers following the correct procedure shown in END-STOP PLIER SETTING.

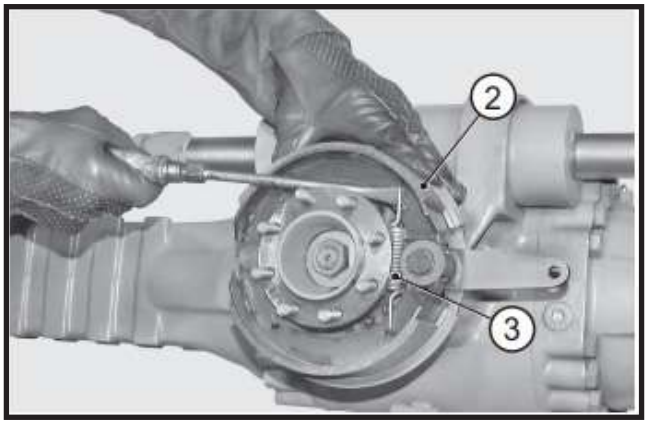

FIGURE 19: Make sure that the shoes (**4**) center the slot of the fulcrum pin and rest on the surface of the lever (**6**).

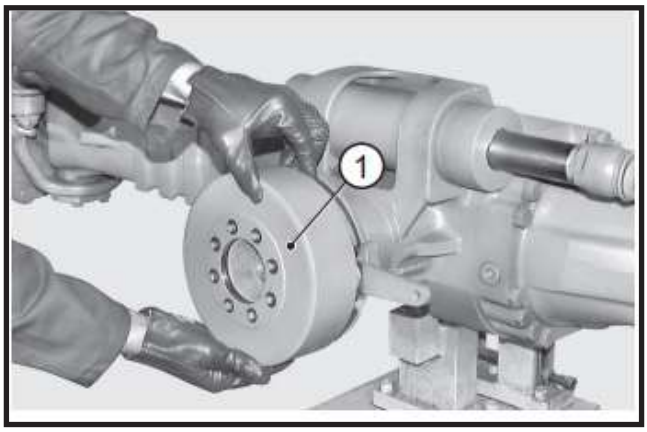

FIGURE 20: Fit the drum (**1**).

T1

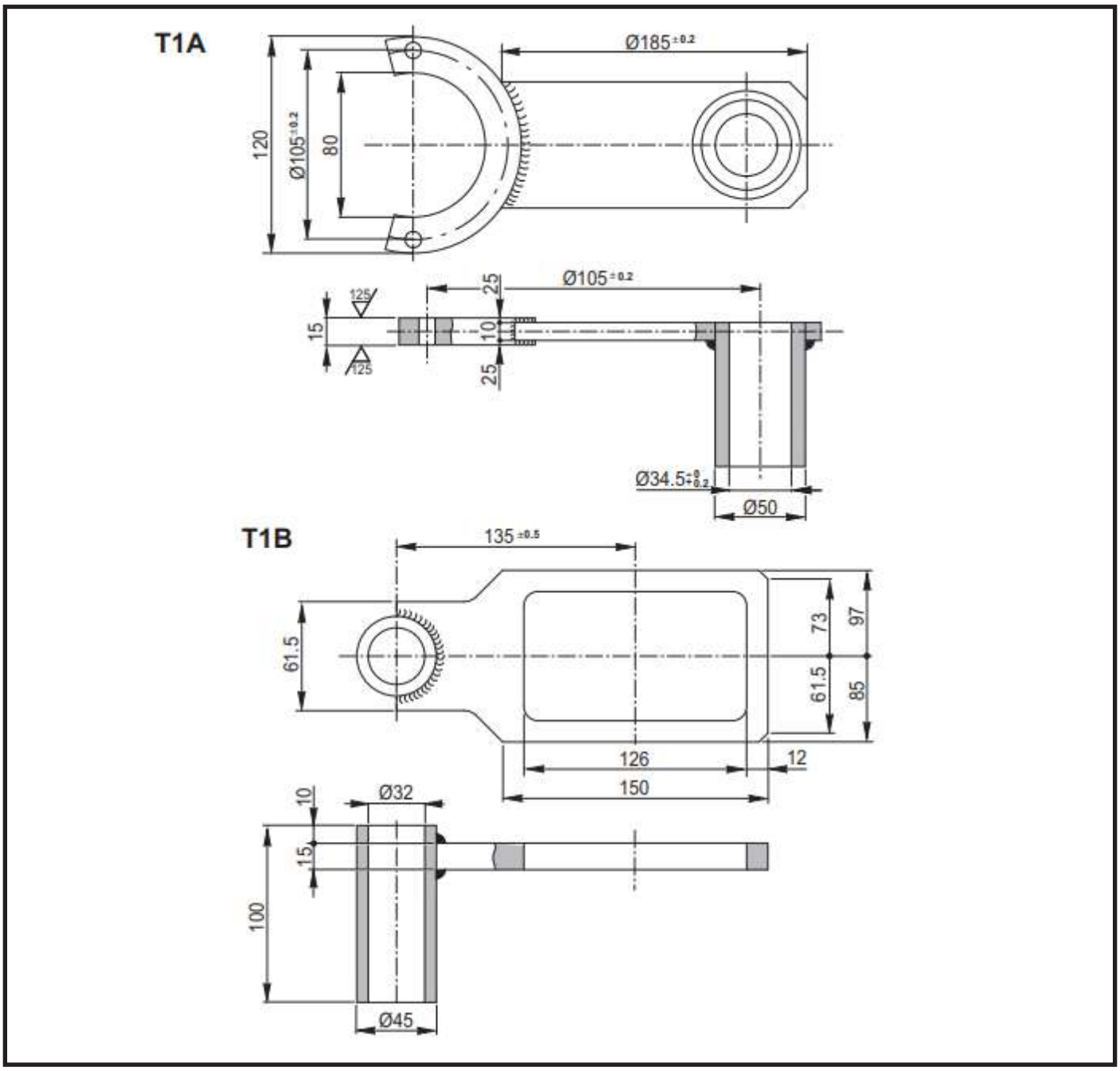
T1A
Ø185 ±0.2
120
Ø105 ±0.2
80
125
25
Ø105 ±0.2
15
10
125
25
Ø34.5 +0.2 +0.1
Ø50
T1B
135 ±0.5
61.5
73
97
61.5
85
126
12
150
10
Ø32
15
100
Ø45

T2

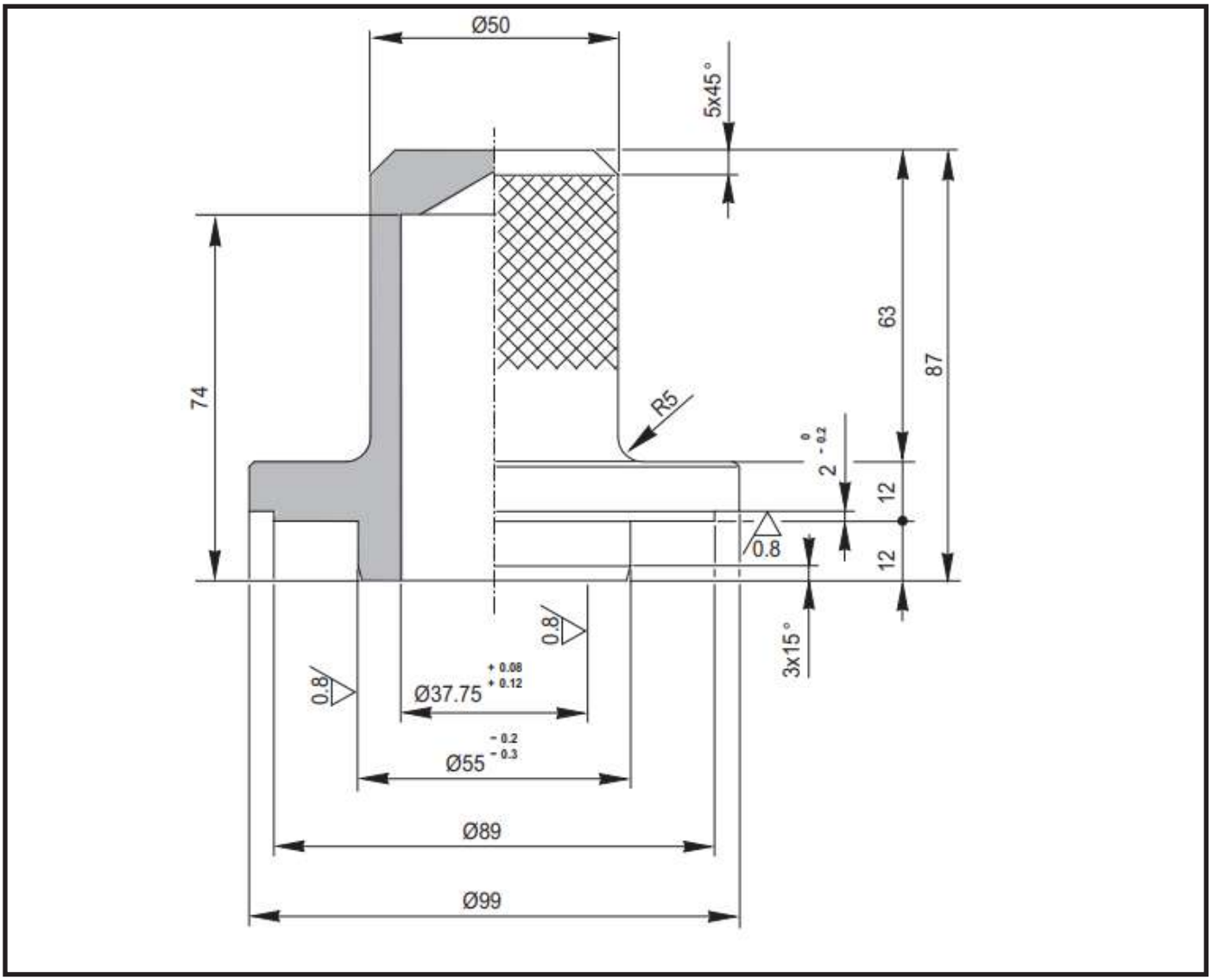
Ø50
5x45°
74
63
87
R5
2 0 -0.2
12
12
0.8
3x15°
0.8
0.8
Ø37.75 +0.08 +0.12
Ø55 -0.2 -0.3
Ø89
Ø99

4” INCOMING BRAKE (2 AND 3 FUNCTION VERSIONS)

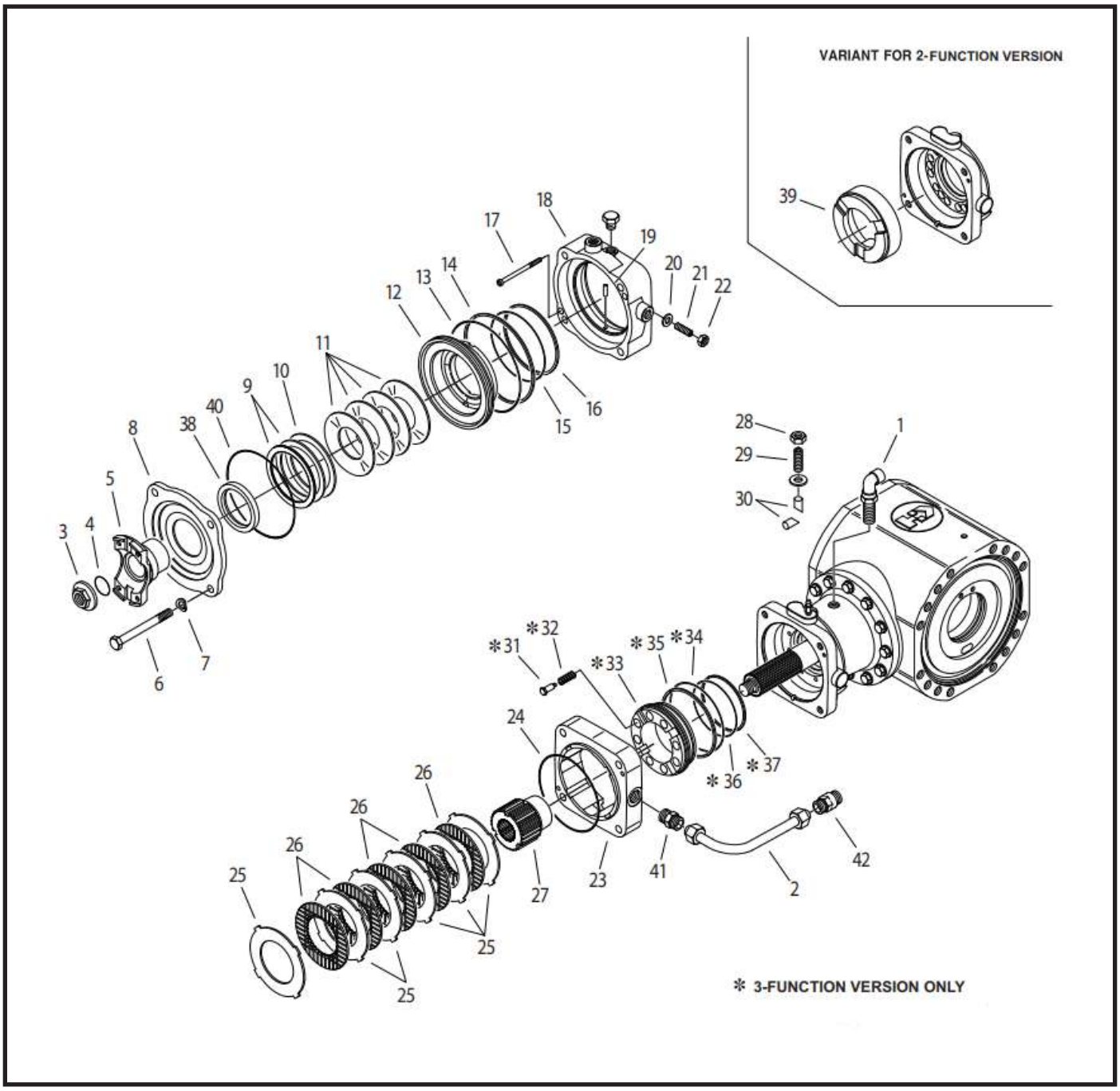

Disassembly

WARNING

Before maintaining brakes, when the axle is installed on the vehicle, follow all safety instructions in the Original Equipment Manufacturer (OEM) manual that came with the vehicle.

WARNING

Before draining oil, release the internal pressure.

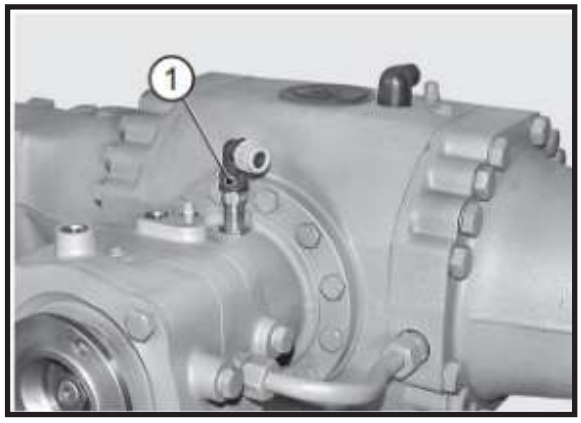

FIGURE 1: Remove electronic sensor (**1**), if fitted.

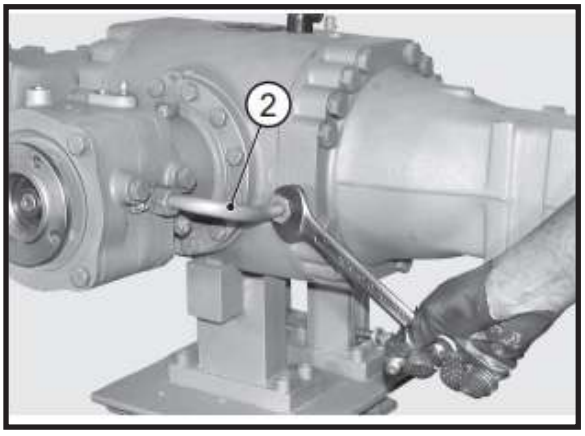

FIGURE 2: Loosen the two nuts and remove lubrication tube (**2**).

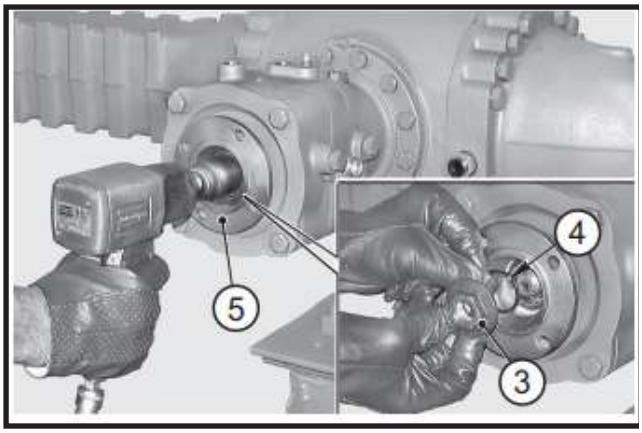

FIGURE 3: Remove nut (**3**), o-ring (**4**) and flange (**5**).

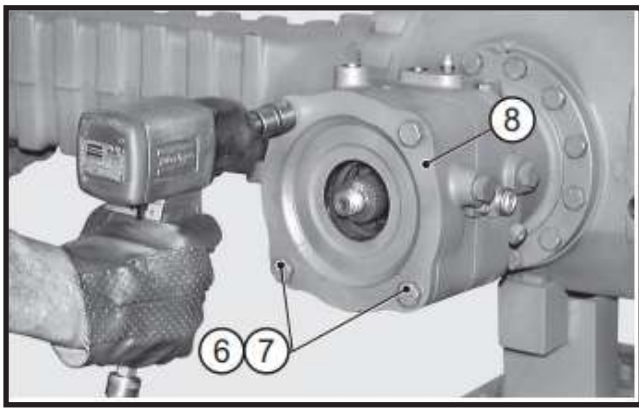

FIGURE 4: Loosen screws (**6**) in an alternate and criss-cross method until the action of Belleville washers (**11**) becomes null. Remove screws (**6**) and spring washers (**7**) of cover (**8**).

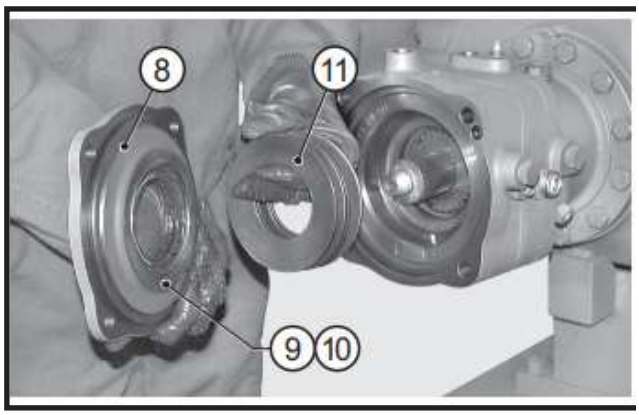

FIGURE 5: Pull out cover (**8**), shims (**9**) separating ring (10) and Belleville washers (**11**).

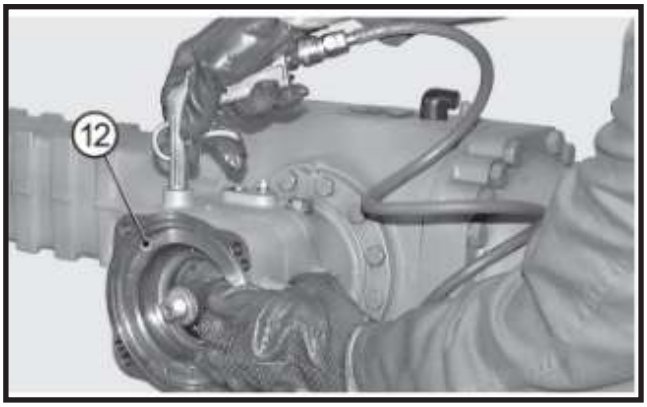

FIGURE 6: Slowly introduce compressed air through the negative brake connection point in order to extract the piston (**12**).

WARNING

Hold piston (**12**) as it may be rapidly ejected and damaged.

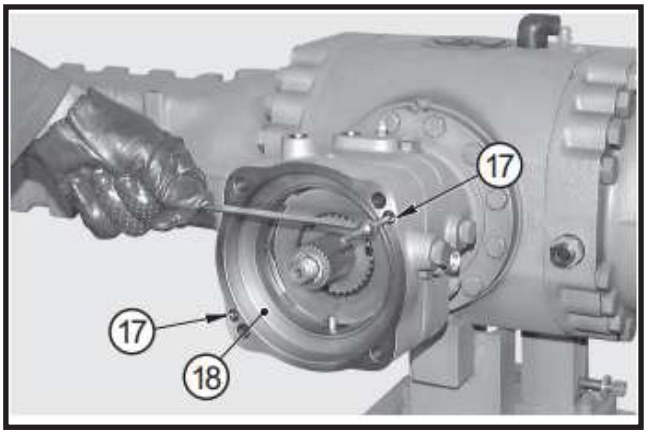

FIGURE 7: Remove check screws (**17**) from cylinder (18).

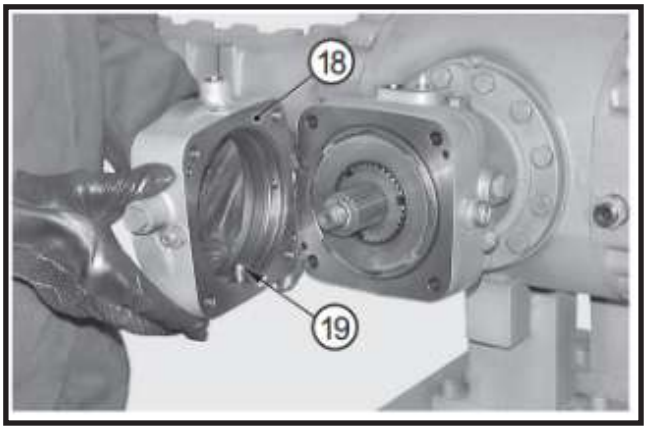

FIGURE 8: Remove cylinder (**18**) complete with guide pin (**19**) of piston (**12**).

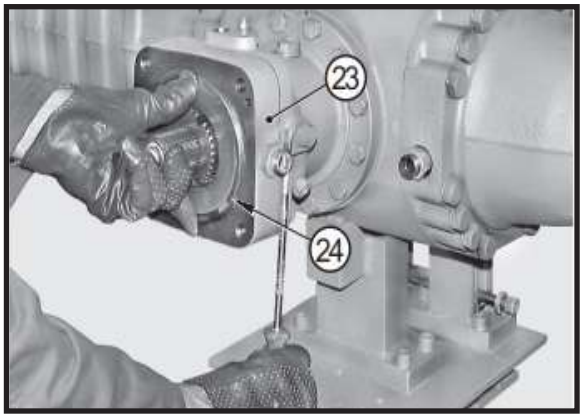

FIGURE 9: Using a lever, pry off the cover (**23**) complete with o-ring (**24**).

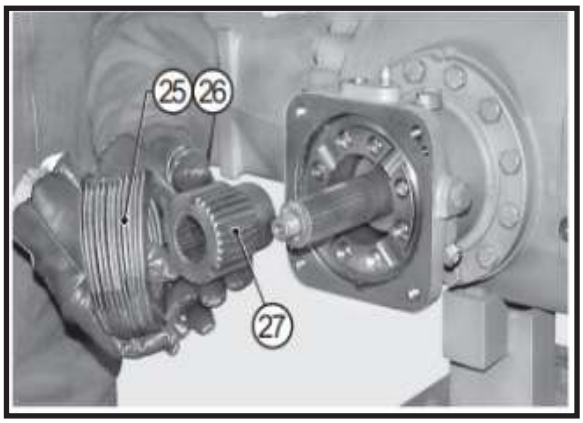

FIGURE 10: Remove friction discs (**25**, **26**) and hub (**27**).

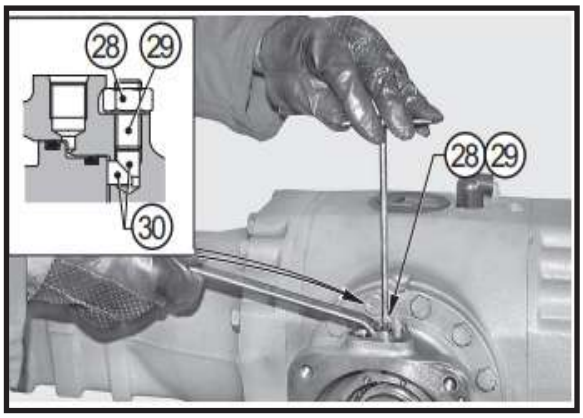

FIGURE 11: 3-FUNCTION VERSION ONLY Loosen nuts (**28**) and unscrew studs (**29**) to retract the adjustment points (**30**). ONLY IF NECESSARY. Remove points (**30**).

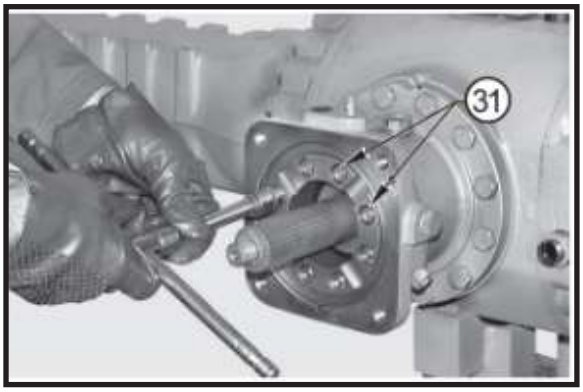

FIGURE 12: 3-FUNCTION VERSION ONLY Loosen and remove the pin-type screws (**31**).

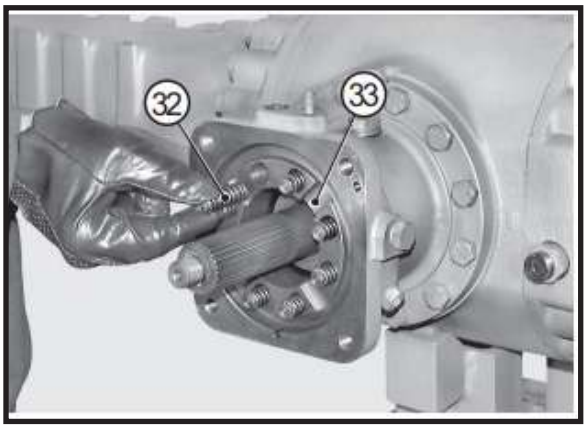

FIGURE 13: 3-FUNCTION VERSION ONLY Remove springs (**32**) of piston (**33**) backward movement.

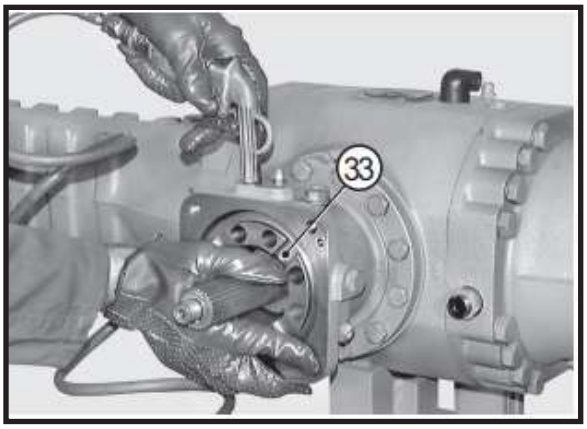

FIGURE 14: 3-FUNCTION VERSION ONLY Slowly introduce compressed air through the connection point of the service brake to extract the piston (**33**).

¡	**CAUTION**
Hold piston (**33**) as it may be rapidly ejected and damaged.	

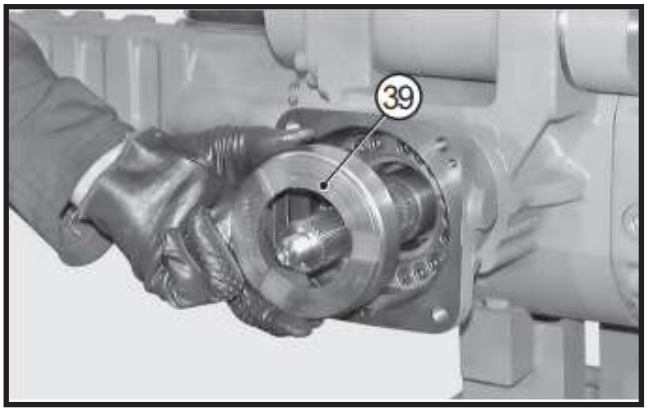

FIGURE 15: 2-FUNCTION VERSION ONLY Remove the spacer (**39**).

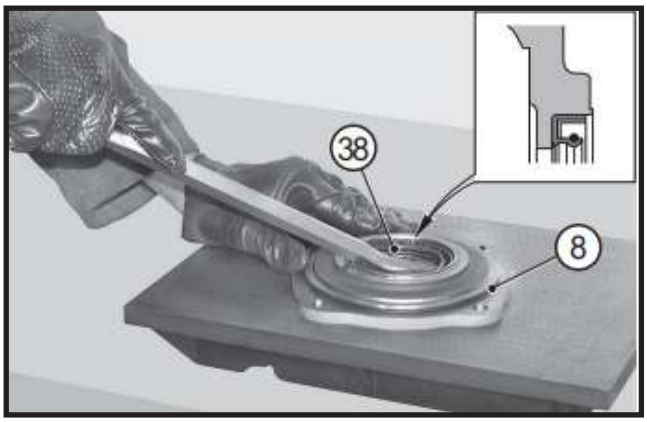

FIGURE 16: Remove sealing ring (**38**) from cover (**8**).

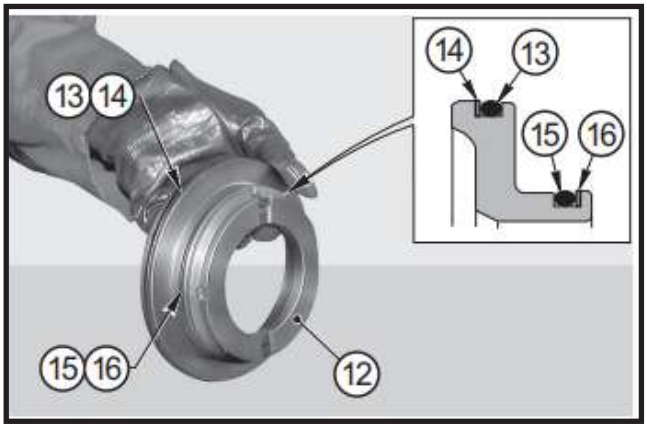

FIGURE 17: Remove sealing rings (**13**, **15**) and anti-extrusion rings (**14**, **16**) from the piston (**12**).

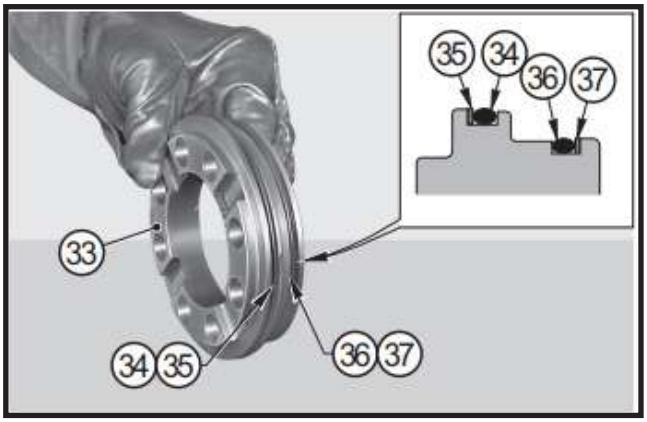

FIGURE 18: 3-FUNCTION VERSION ONLY Remove sealing rings (**34**, **36**) and anti-extrusion rings (**35**, **37**) from piston (**33**).

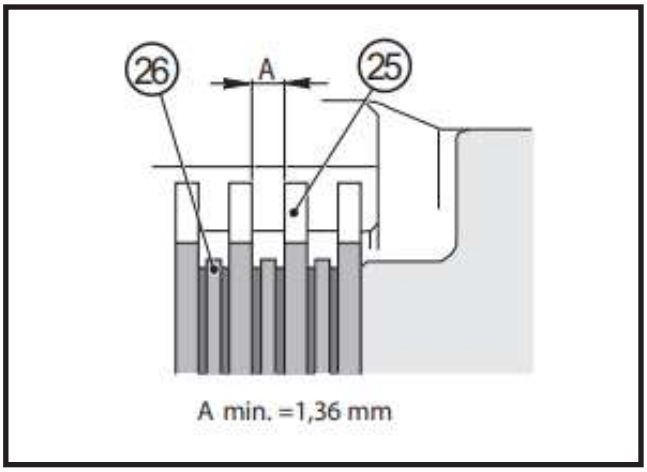

FIGURE 19: Always check the thickness of braking discs (**26**), even if the braking unit is being disassembled for other reasons than this. If thickness “A” of one of the discs (**26**) is close to the minimum admissible size of 0,05 in (1.36 mm), replace the complete pack.

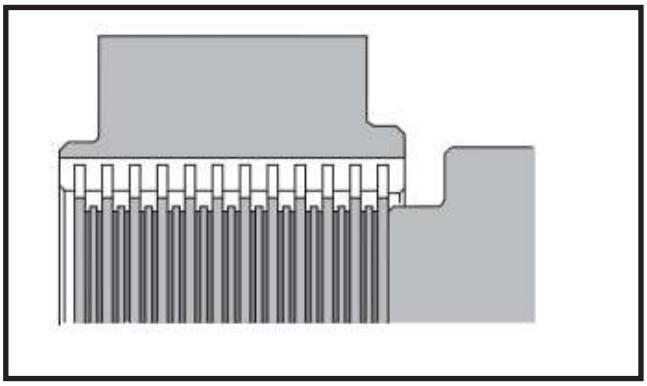

FIGURE 20: BRAKING DISCS PACK CONTENTS The braking discs pack is comprised of: 11 braking discs and 12 steel counterdiscs.

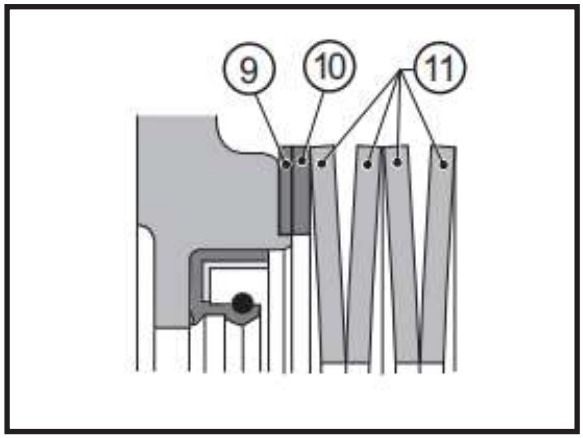

FIGURE 21: If the braking discs unit is replaced, shims (**9**)- which determine the preloading of Belleville washers (**11**) - must to be restored.

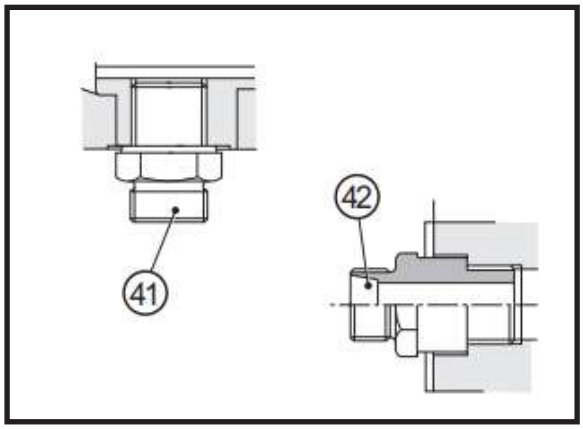

FIGURE 22: ONLY WHEN REPLACEMENT IS NECESSARY Remove the union pieces (**41**, **42**) connecting the lubrication tube (**2**).

Assembly

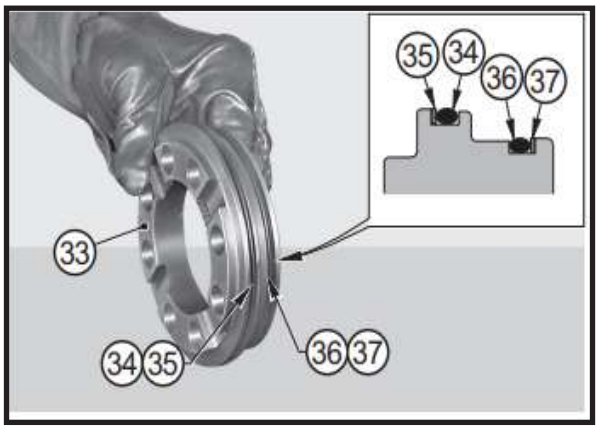

FIGURE 23: 3-FUNCTION VERSION ONLY Fit the sealing rings (**34**, **36**) and the anti-extrusion rings (**35**, **37**) onto the piston (**33**) of the service brake.

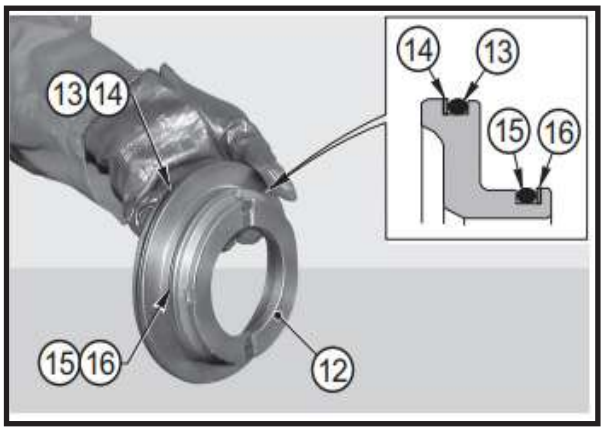

FIGURE 24: Fit the sealing rings (**13**, **15**) and the anti-extrusion rings (**14**, **16**) onto the piston (**12**) of the negative break.

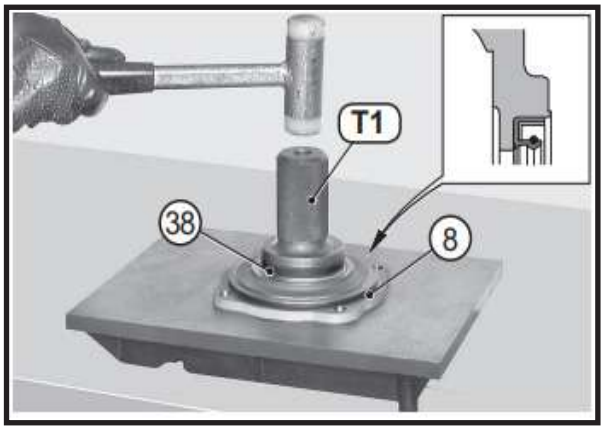

FIGURE 25: Lubricate sealing ring (**38**) and, using tool T1, fit it into the cover (**8**).

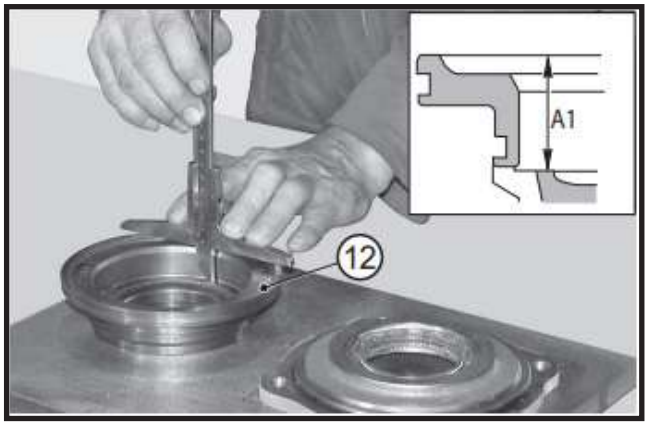

FIGURE 26: 3-FUNCTION VERSION ONLY Measure size “A1” of piston (**12**) and note it down.

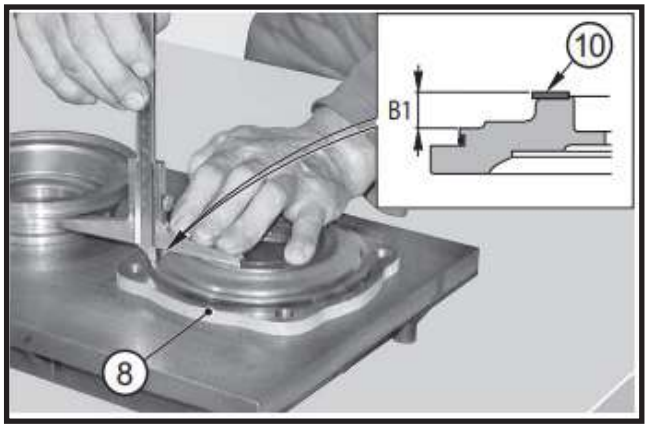

FIGURE 27: 3-FUNCTION VERSION ONLY Fit the separating ring (**10**) of Belleville washers onto the cover (**8**), measure size “B1” and note it down.

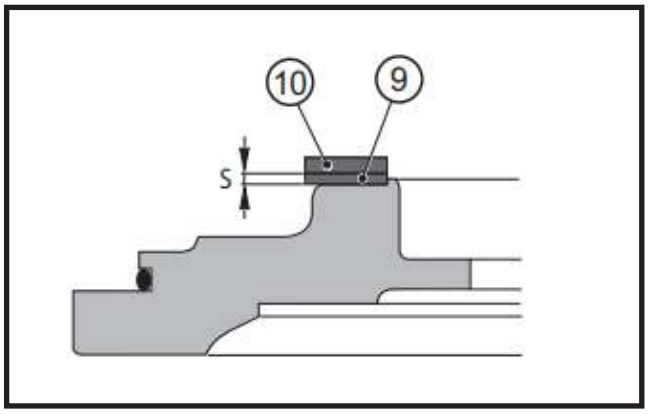

FIGURE 28: 3-FUNCTION VERSION ONLY

Using the measurements just taken, calculate thickness “S” of shims (**9**) as follows:

S = (A1 + 1,5) ± (B1 + 18,4)

where: S = Shim thickness 0,06 in (1,5 mm) = fixed measure of braking discs clearance 0,72 in (18,4 mm) = fixed measure of Belleville washers.

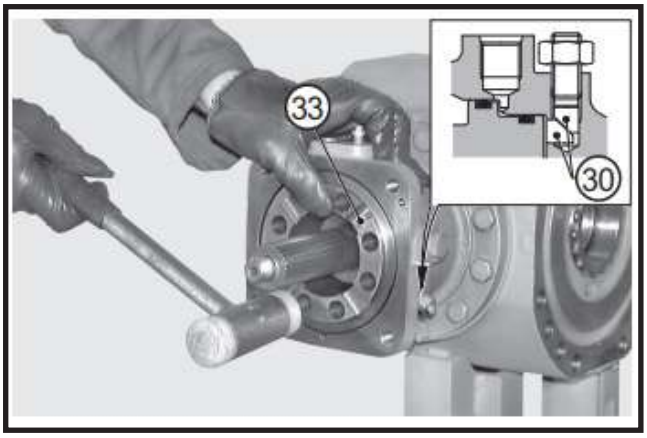

FIGURE 29: 3-FUNCTION VERSION ONLY Lubricate the o-rings and install the complete piston (**33**). Orient the piston using a lever and push it to end of stroke with a plastic hammer.

CAUTION

Check that the adjusting stakes (30) are thoroughly inserted and make sure they perform a sliding motion in relation to each other.

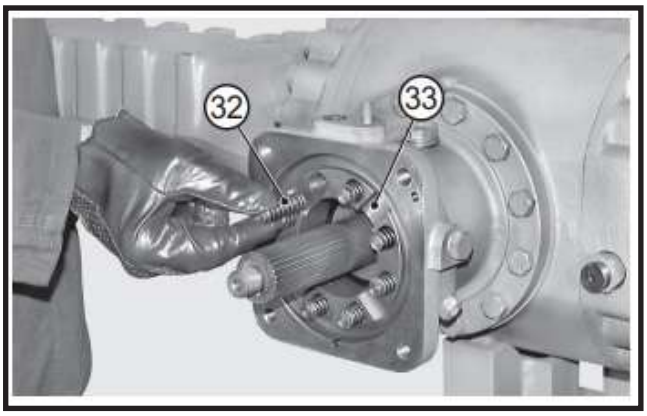

FIGURE 30: 3-FUNCTION VERSION ONLY Insert springs (**32**) for piston (**33**) backward movement.

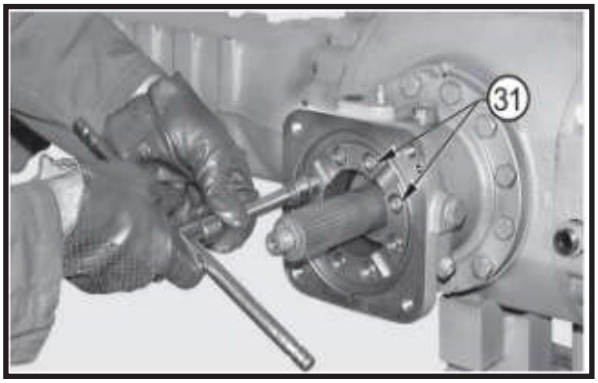

FIGURE 31: 3-FUNCTION VERSION ONLY Apply Loctite 242 to the thread of screws (**31**) and tighten.

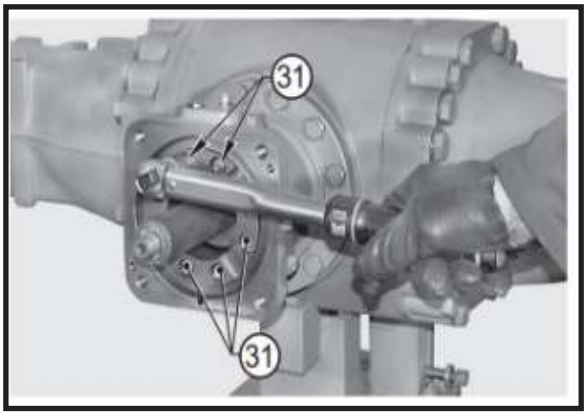

FIGURE 32: 3-FUNCTION VERSION ONLY Lock screws (31) in a criss-cross method by using a torque wrench set to a maximum torque of 7 ft-lb (10 N·m).

CAUTION

Do not exceed the specified torque setting.

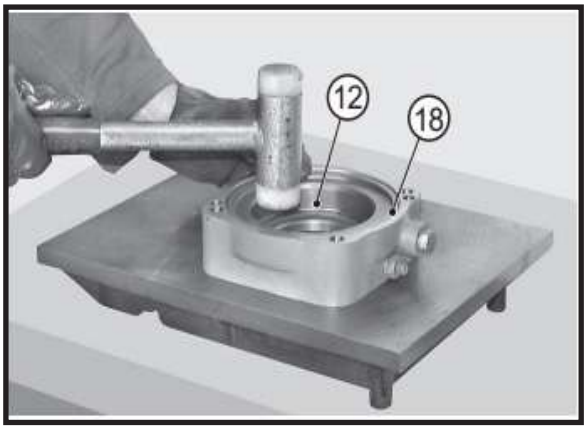

FIGURE 33: Lubricate seals (**13**, **15**) and fit the piston (**12**) into the cylinder (**18**). Engage piston on the pin (**19**). For the assembly, use a plastic hammer and push the piston (**12**) to end of stroke.

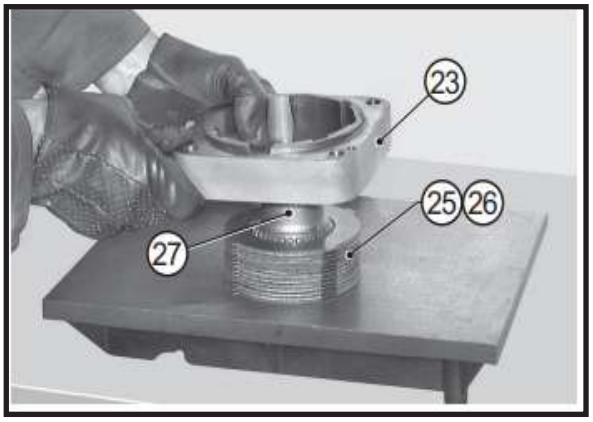

FIGURE 34: Lightly lubricate the braking discs (**25, 26**) and fit them onto the hub (**27**). Align discs (**25**) and fit the cover (**23**).

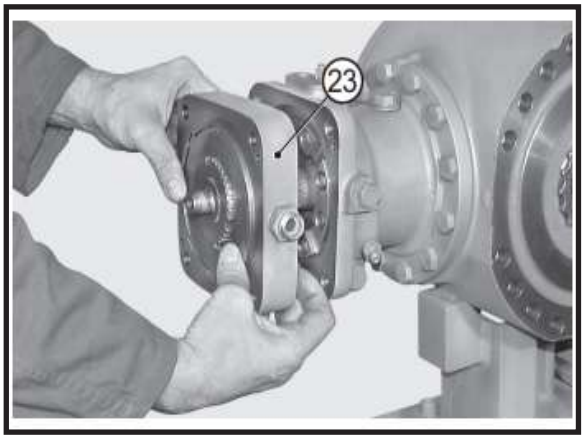

FIGURE 35: Apply Loctite 510 on the face of the cover (**23**). Fit the discs-hub-cover assembly prepared in the previous stages onto the pinion and engage it.

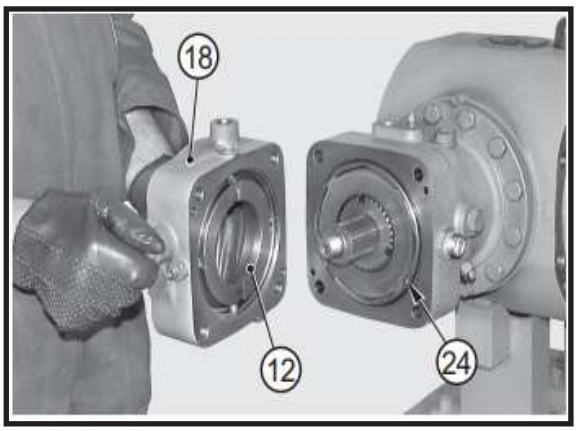

FIGURE 36: Lubricate the o-ring (**24**) and fit cylinder (**18**) complete with piston (**12**).

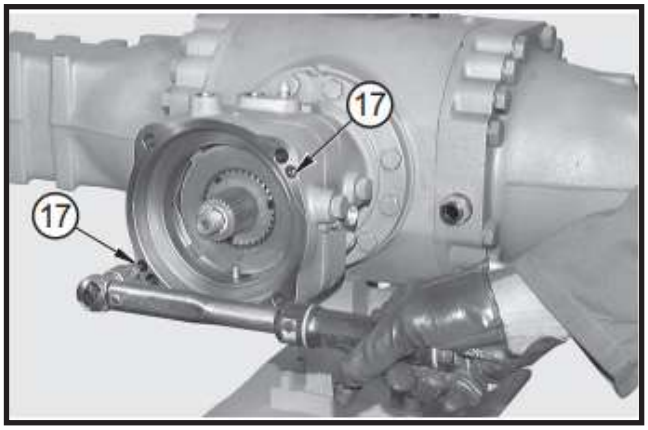

FIGURE 37: Introduce screws (**17**) and tighten in a criss-cross method. Use a torque wrench setting of 7-8 ft-lb (9.5 - 10.5 N·m).

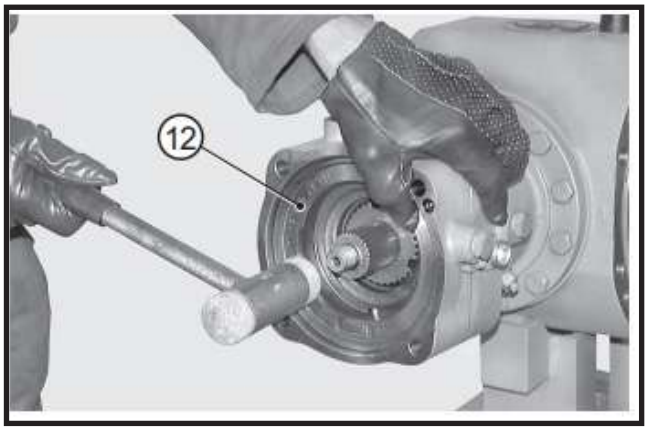

FIGURE 38: 3-FUNCTION VERSION ONLY Using a plastic hammer, push the piston (**12**) to the end of stroke.

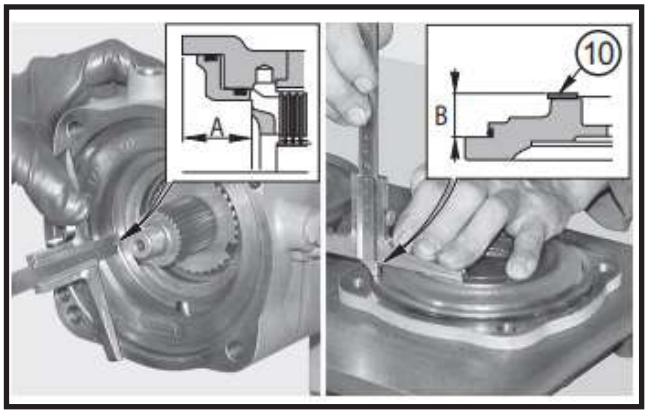

FIGURE 39: 2-FUNCTION VERSION ONLY

Fit the separating ring (**10**) of Belleville washers onto the cover (**8**), measure size “B” and note it down. Measure size “A” which you will need for calculating the shims (**9**) according to the following:

S = A ± (B + 18,4) where:

S = Shim thickness 0,72 in (18,4 mm) = fixed measure of Belleville washers.

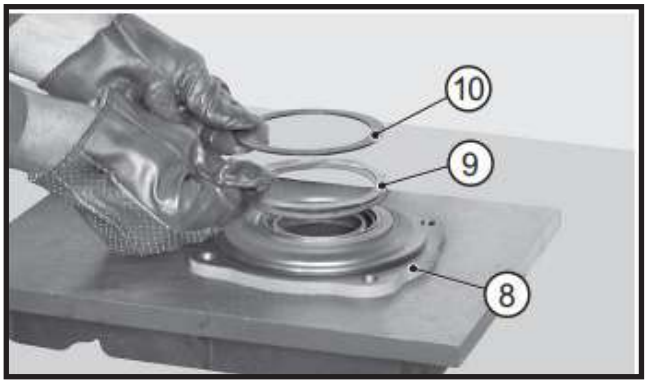

FIGURE 40: Lightly lubricate the shims (**9**) required according to calculations and the separating ring (**10**) of the Belleville washers. Fit shims and ring on the cover (**8**).

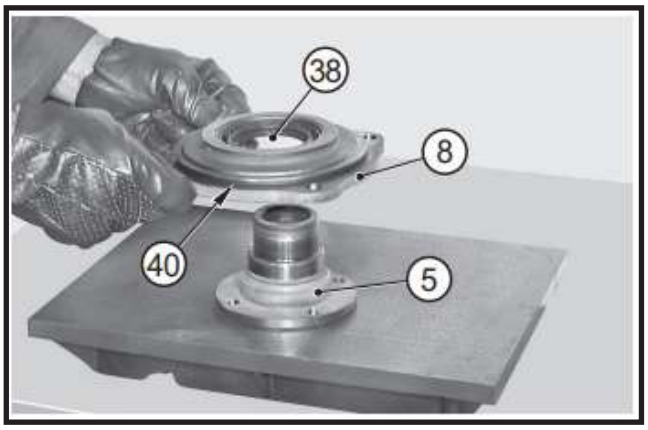

FIGURE 41: Check the state of the o-ring (**40**). Lubricate sealing ring (**38**) and fit flange (**5**) into the cover (**8**).

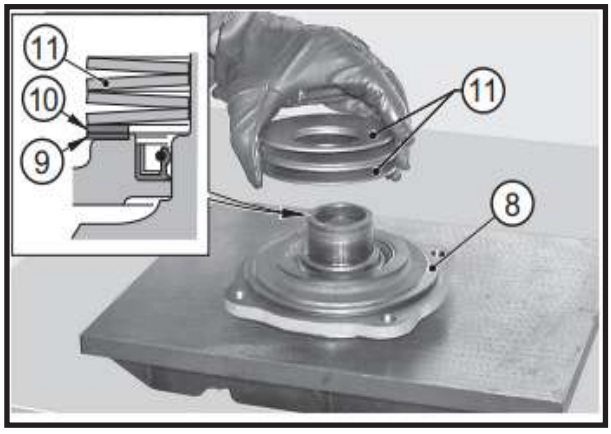

FIGURE 42: Fit the Belleville washers (**11**) onto the cover (**8**), thoroughly checking washers orientation.

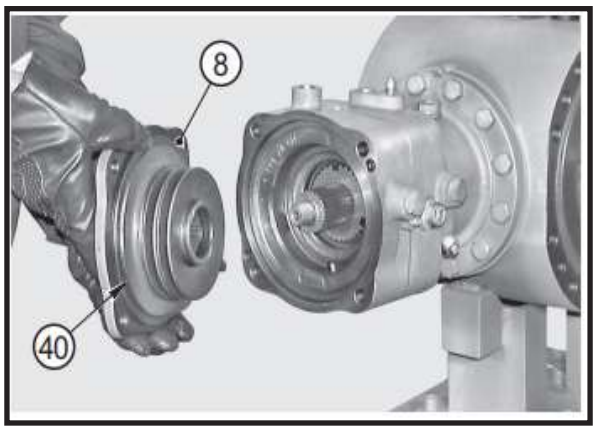

FIGURE 43: Lubricate the o-ring (**40**) and install the cover assembly (8).

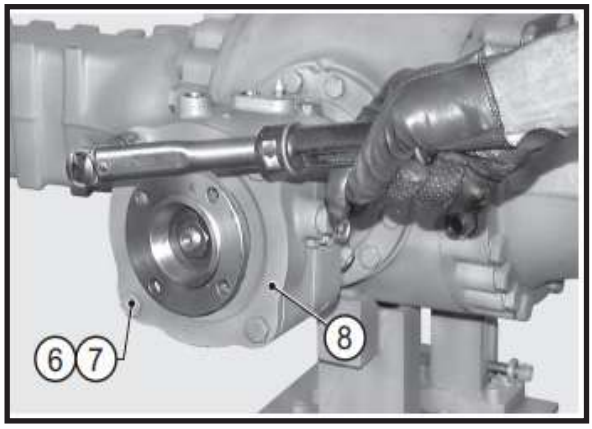

FIGURE 44: Install screws (**6**) and washers (**7**). Lock the cover with a torque wrench setting of 85-94 ft-lb (116 - 128 N·m).

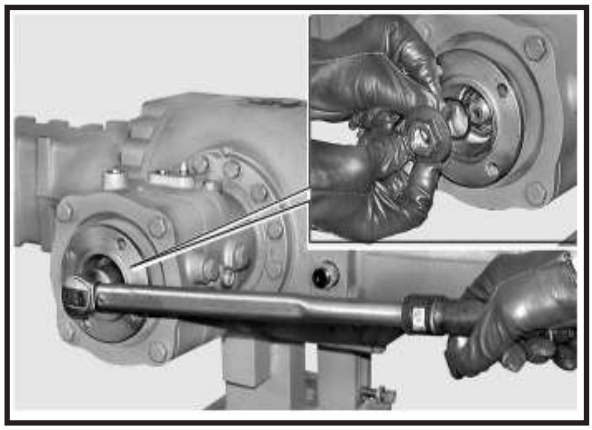

FIGURE 45: Apply Loctite 242 to the threaded portion of the pinion, fit o-ring (**4**) and nut (**3**). Tighten the nut with a torque wrench set to 206-229 ft-lb (280 - 310 N·m).

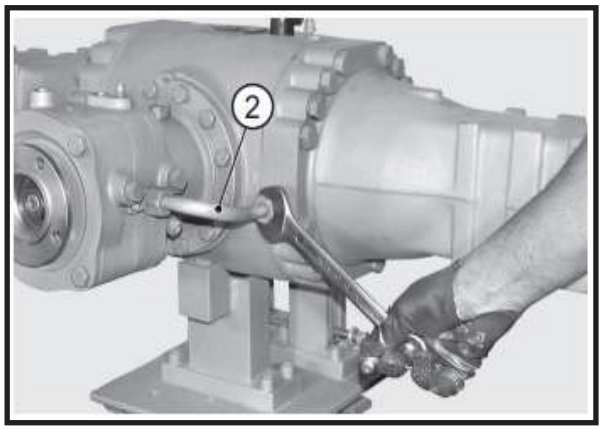

FIGURE 46: Install the lubrication tube (**2**).

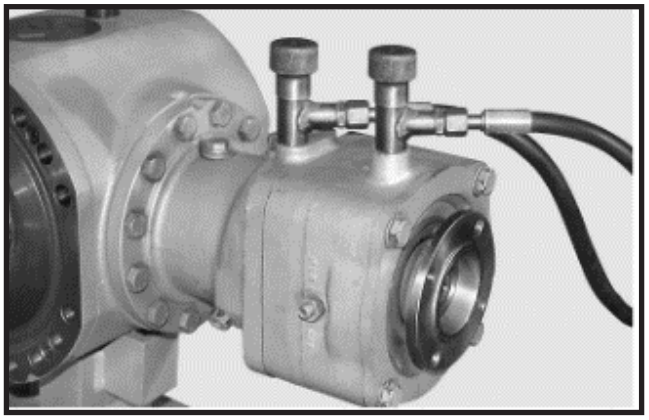

FIGURE 47: 3-FUNCTION VERSION ONLY Connect the service and negative brakes to an external pump; introduce pressure up to a value of 15-18 ft-lb (20 - 25 N·m).

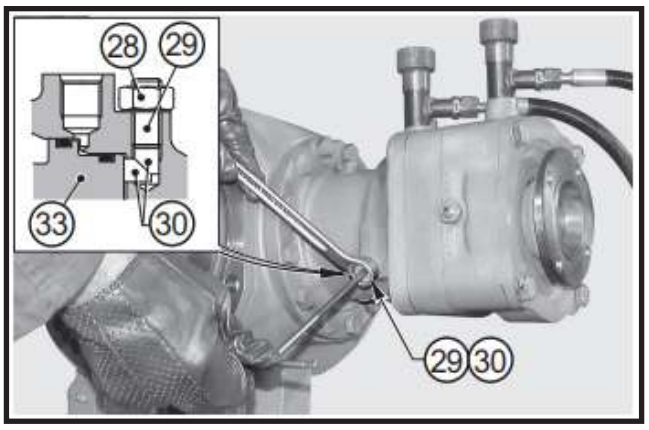

FIGURE 48: 3-FUNCTION VERSION ONLY

Screw studs (**29**) until pins (**30**) position themselves against the piston (**33**), then unscrew studs by one turn to obtain a 0,06 in (1,5 mm) stroke.

Lock studs (**29**) into position with the nuts (**28**) tightened at 15 N·m.

Release pressure.

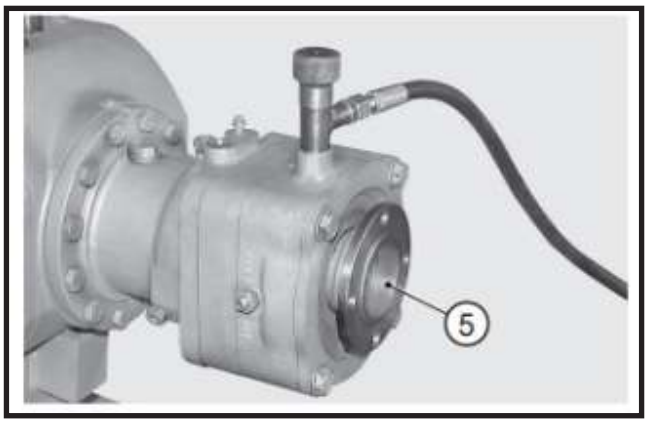

FIGURE 49: Check negative brake release by introducing a pressure of 232-508 psi (16 - 35 bar) and by manually rotating the flange (**5**). Release pressure.

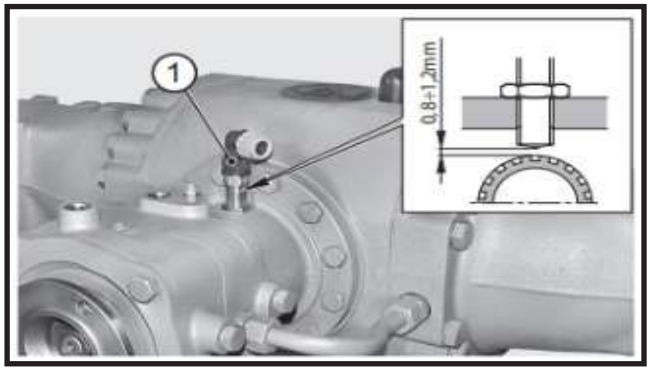

FIGURE 50: Fit the electronic sensor (**1**) and screw it up to the limit stop. Unscrew sensor by 3/4 turn and lock into position with nut. Locking torque: maximum 22 ft-lb (30 N·m).

!	**CAUTION**
Do not exceed the specified torque setting.	

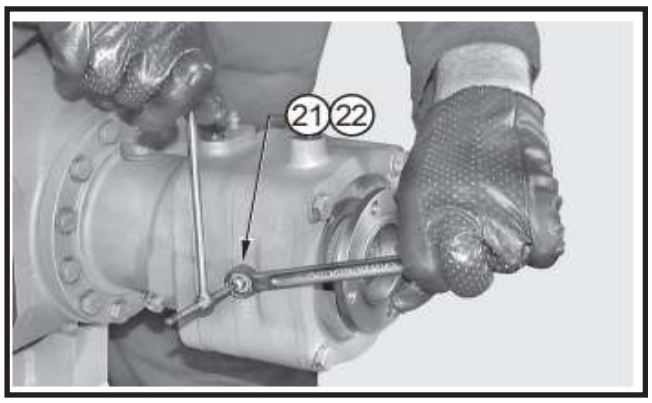

FIGURE 51: To release the negative brake during an emergency, (lack of pressure due to vehicle breakdown), loosen nuts (**22**) and screw studs (**21**) in an alternate and gradual manner until you notice some preloading; continue by giving another 1,5 turns.

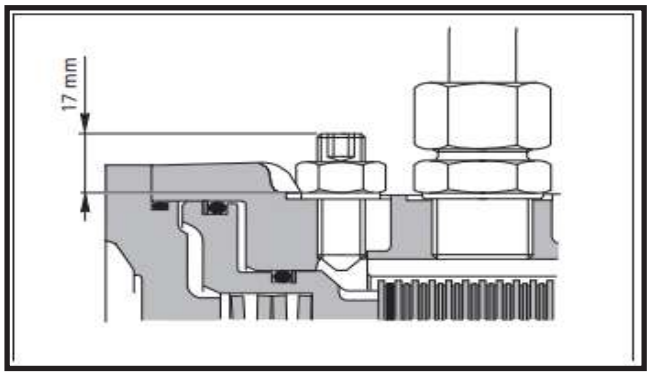

FIGURE 52: When the emergency is over, loosen the studs in an alternate manner until a 0,67 in (17 mm) projection is obtained; lock into position with the nuts (**22**) tightened to 11 ft-lb (15 N·m).

SPECIAL TOOLS

T1

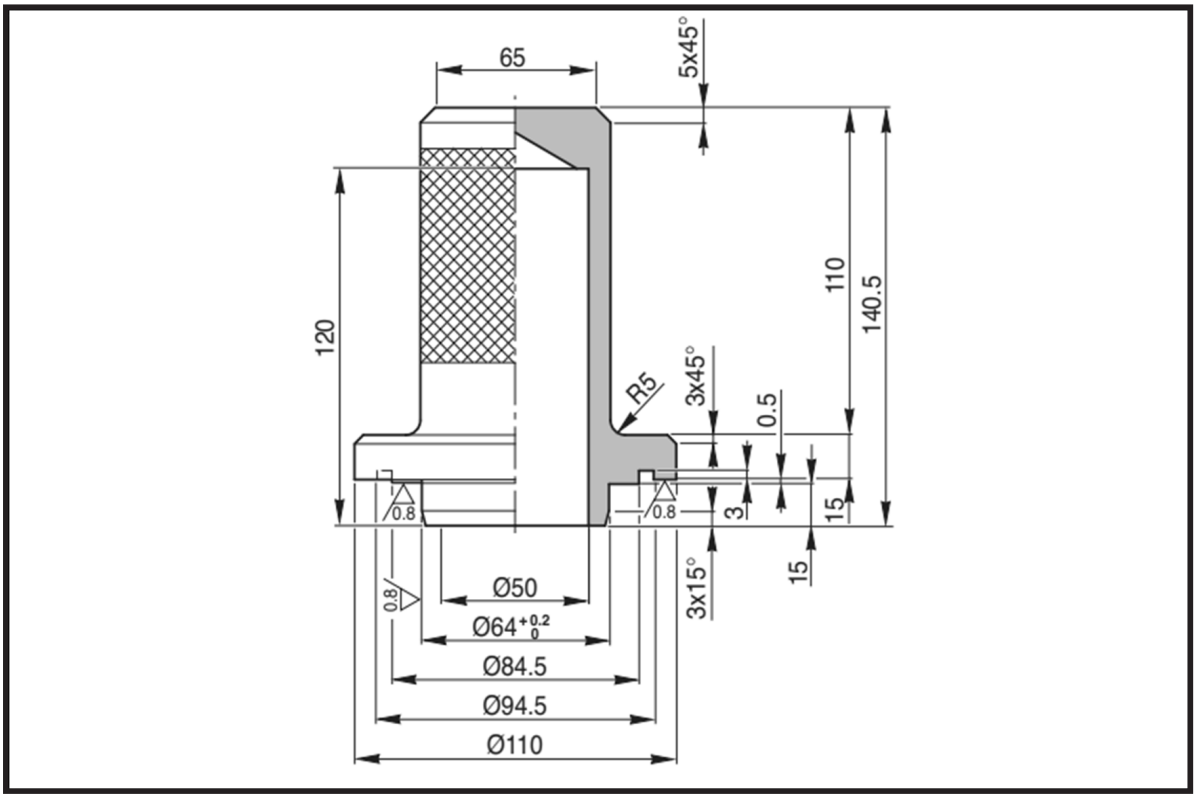

T2

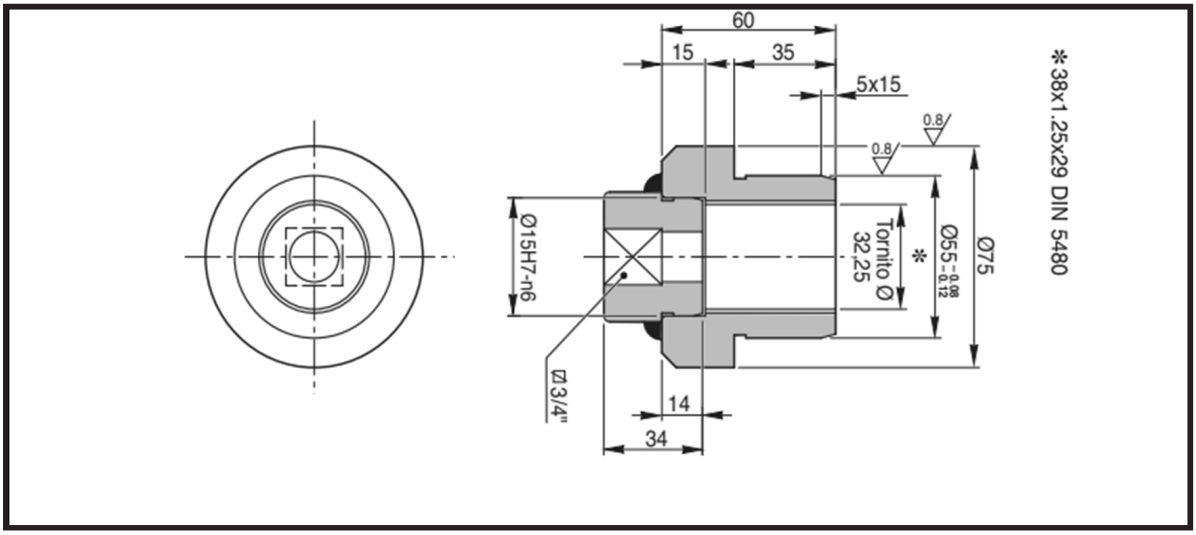

T3

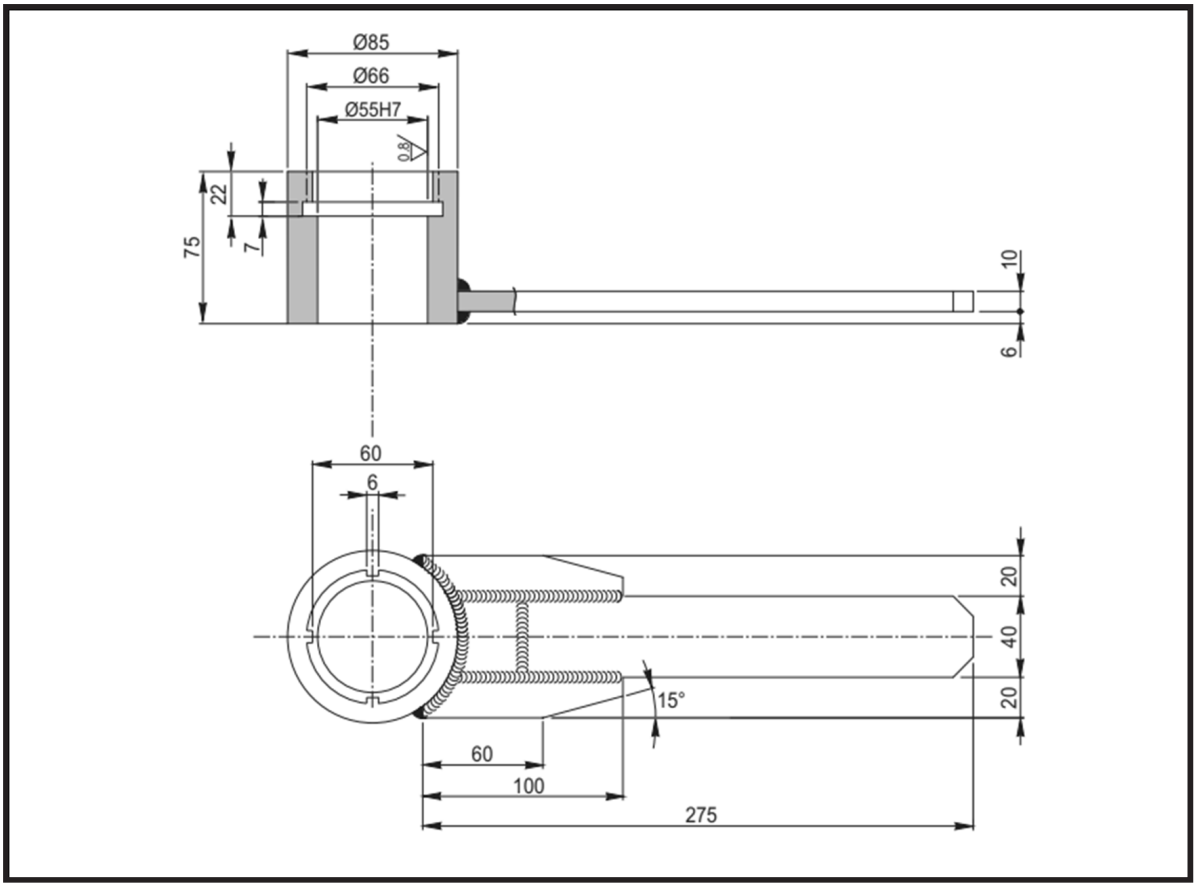

NORMAL DIFFERENTIAL UNIT

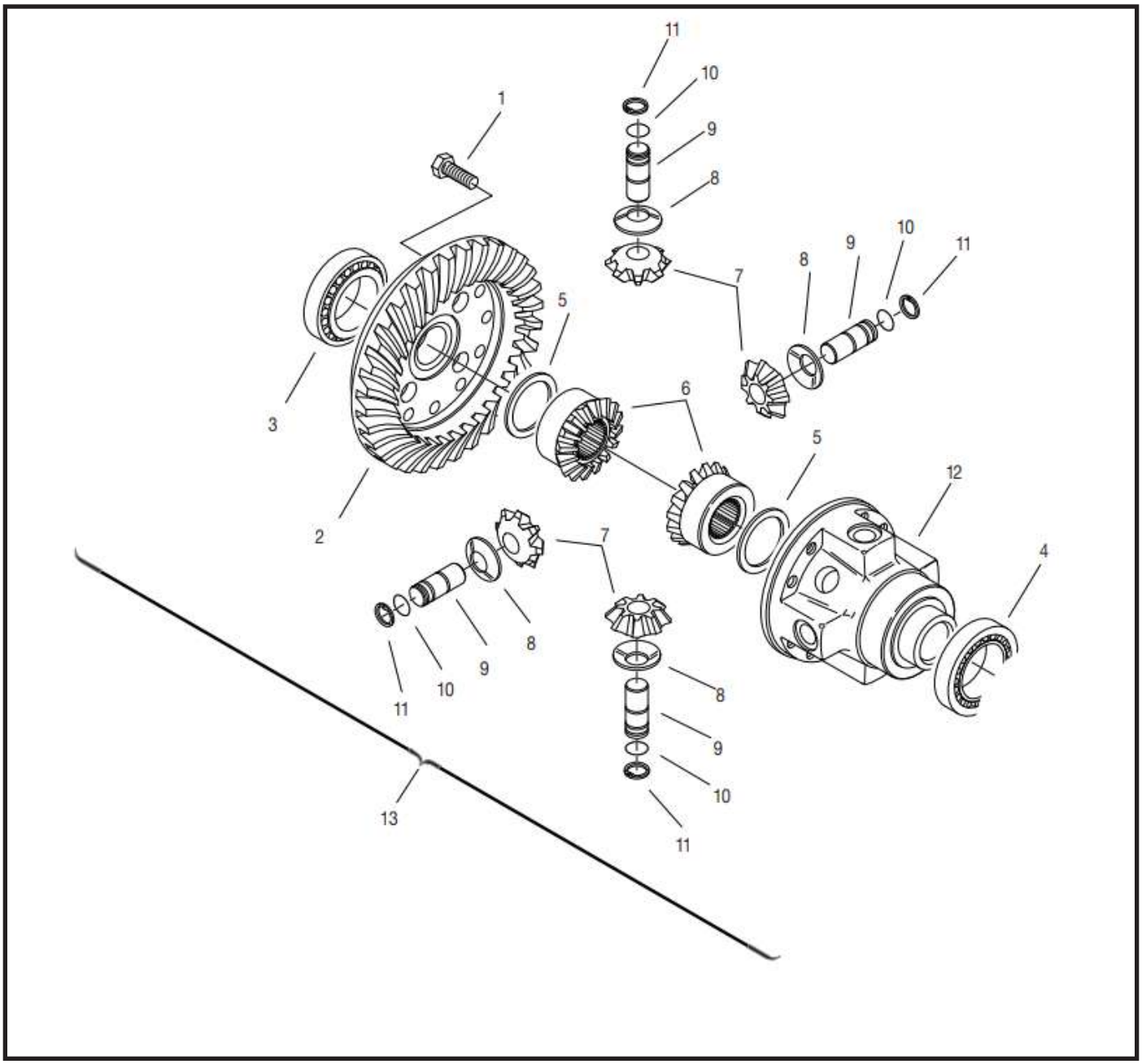

Disassemly

CAUTION

Before draining oil, release the internal pressure.

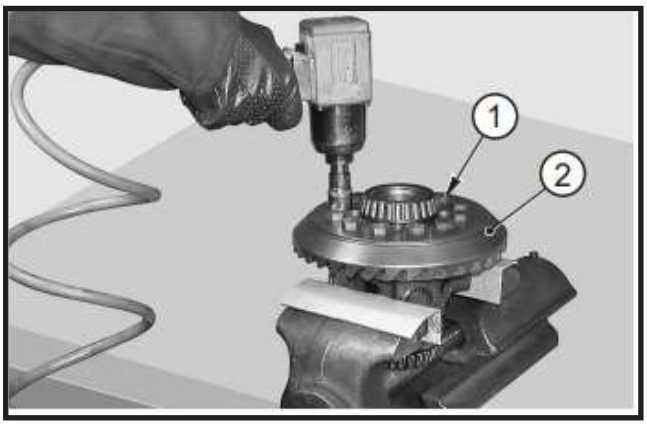

FIGURE 1: Remove the capscrews (**1**) from the ring gear (2).

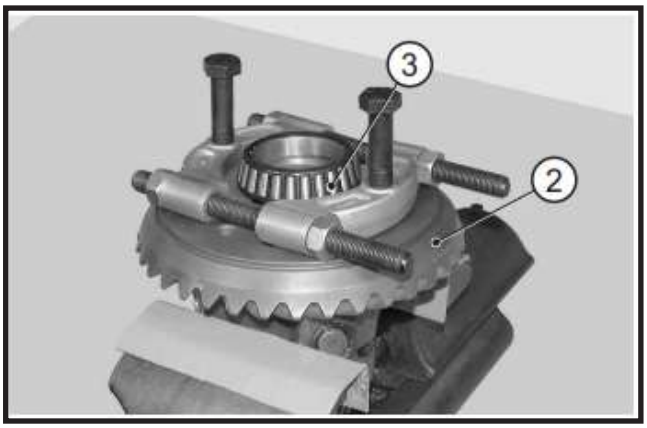

FIGURE 2: If the bearing needs replacing, extract the bearing (**3**) and remove the ring gear (**2**).

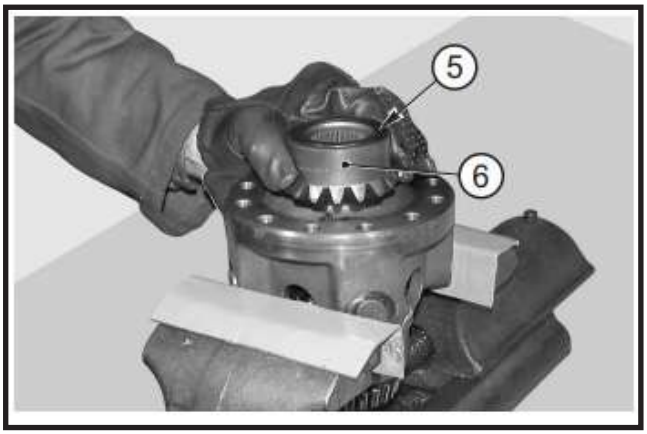

FIGURE 3: Remove the shim washer (**5**) and the planetary gear (**6**).

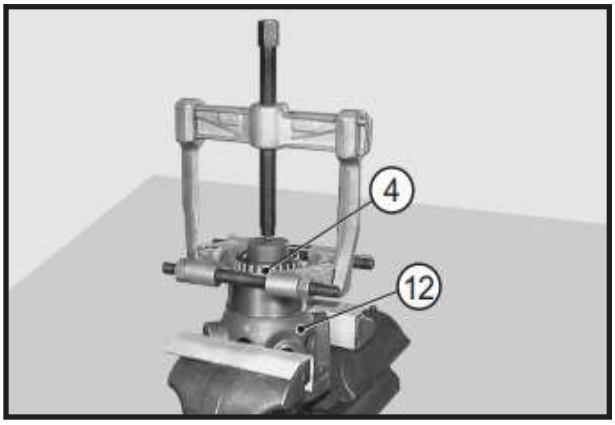

FIGURE 4: If the bearing need replacing, extract the bearing (**4**) from the differential carrier (**12**).

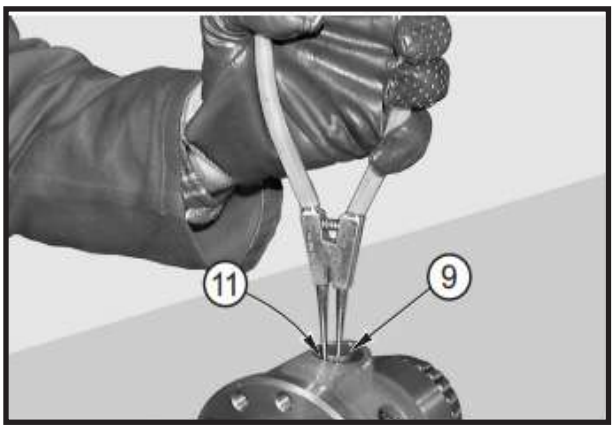

FIGURE 5: Remove the snap rings (**11**) from the two pins (**9**) of the planetary gears (**7**).

CAUTION

Set the pliers following the correct procedure shown in END-STOP PLIER SETTING.

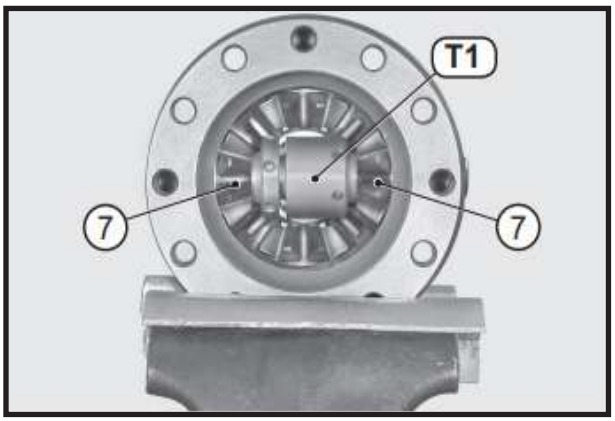

FIGURE 6: Insert tool T1 between the planetary gears (**7**).

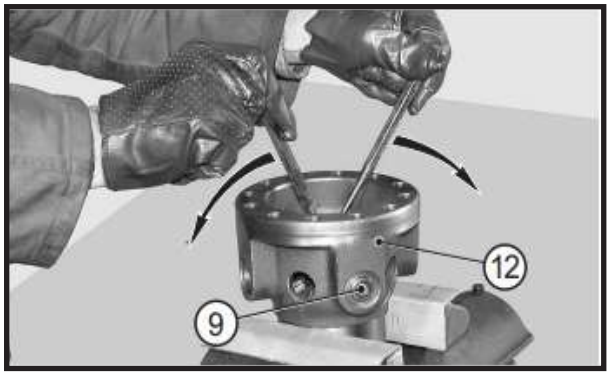

FIGURE 7: Force tool T1 in-between the planetary gears (**7**) using two pin-drivers.

CAUTION

Make sure that tool T1 is perfectly lined up with the pins (**9**) when locked.

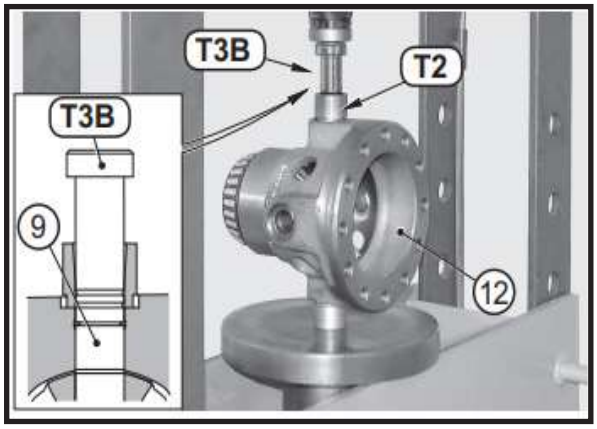

FIGURE 8: Place the differential carrier (**12**) under a press, position guide bushing T2 and insert press tool T3A. Press T3A pin to limit position.

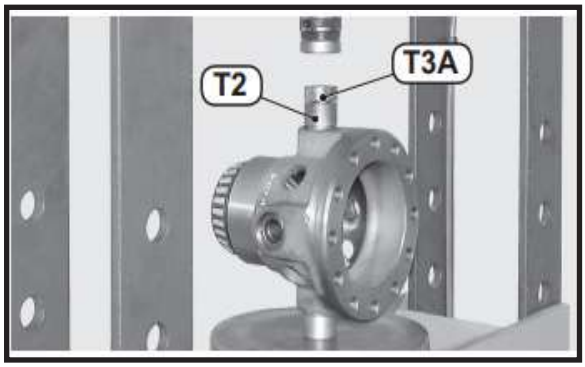

FIGURE 9: Remove press tool T3A and guide bushing T2.

FIGURE 10: Remove tool T1 together with the pin (**9**) of the planetary gear.

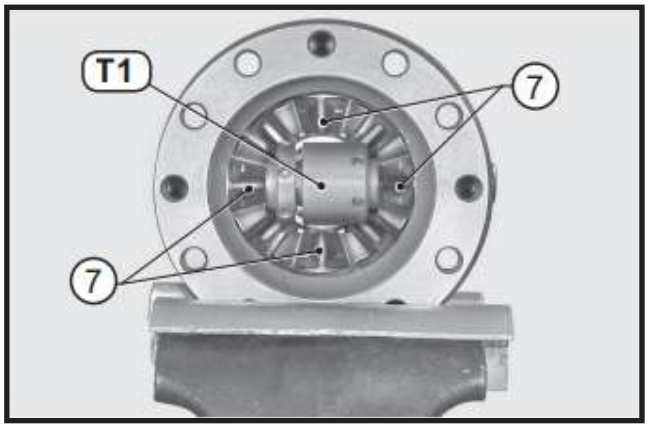

FIGURE 11: Leave the released planetary gear in position and again lock tool T1. Repeat the operations for the extraction of the pin of the 2nd planetary gear (**9**). Repeat the operations for all other pins.

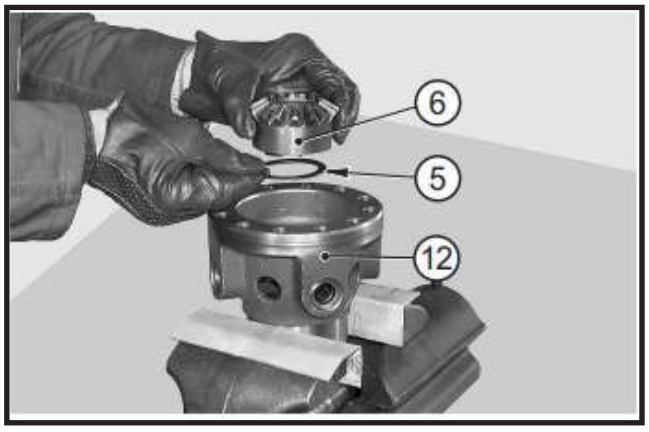

FIGURE 12: Remove tool T1 and remove the last two planetary gears (**7**), the 2nd differential side gear (**6**) and the relative shim washer (**5**) from the differential carrier.

Assembly

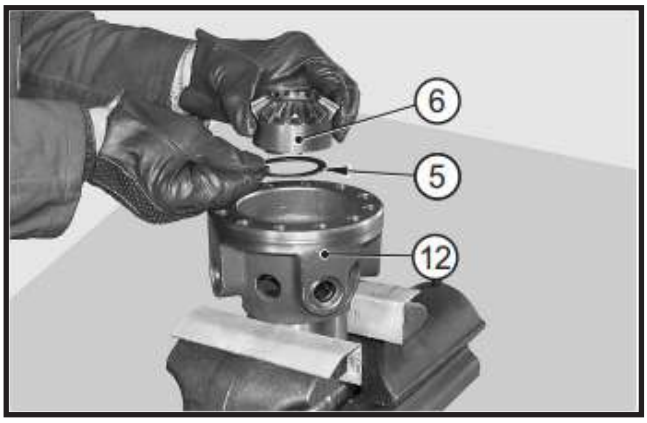

FIGURE 13: Insert the shim washer (**5**) and the differential side gear (**6**) in the differential carrier (12).

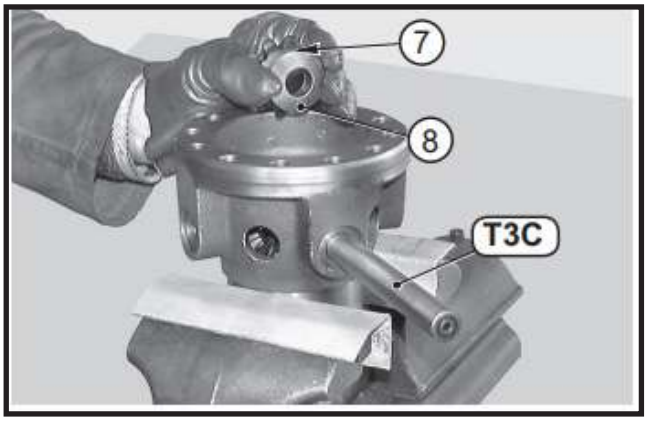

FIGURE 14: Position the shim washer (**8**) and the first planetary gear (**7**). Hold them in position using bar T3C.

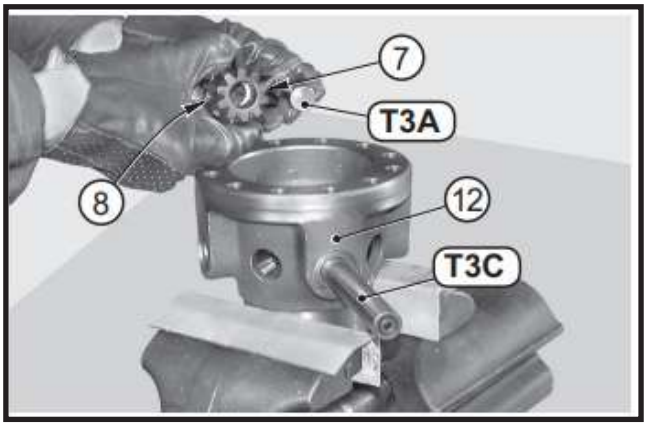

FIGURE 15: Using press tool T3A, position the second planetary gear (**7**) and the relative shim washer (**8**).

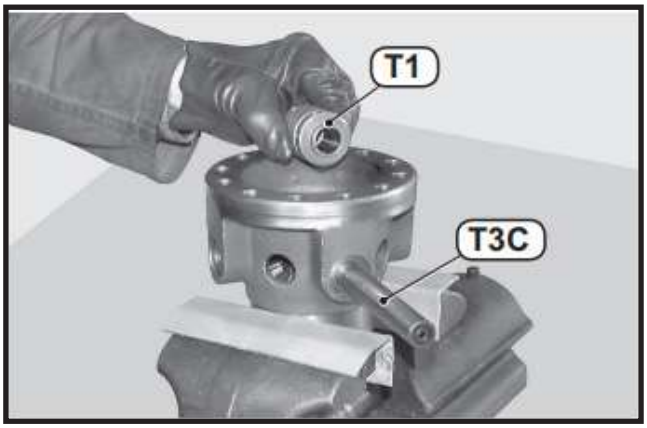

FIGURE 16: Insert tool T1 between the two planetary gears (**7**). Line up the entire unit by pushing bar T3C all the way down until press tool T3A is ejected.

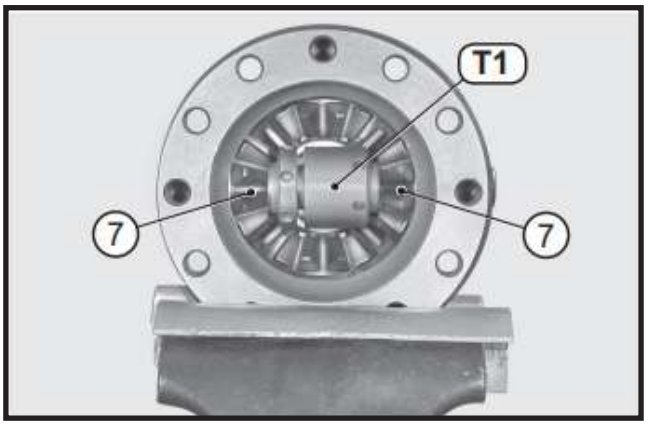

FIGURE 17: Lock tool T1 behind the planetary gears (**7**). After locking, remove bar T3C.

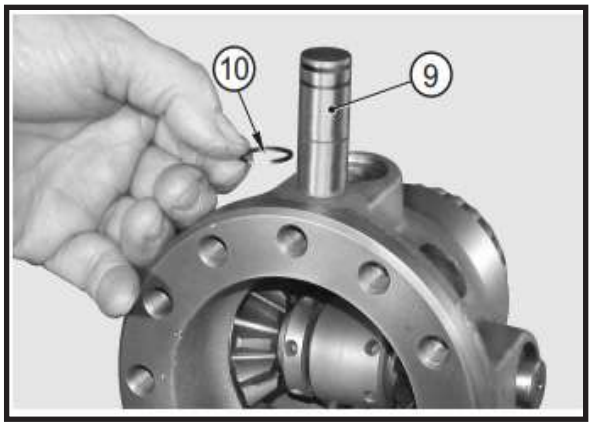

FIGURE 18: Fit the snap rings (**11**) onto the pins (**9**).

i	**CAUTION**

Set the pliers following the correct procedure shown in END-STOP PLIER SETTING.

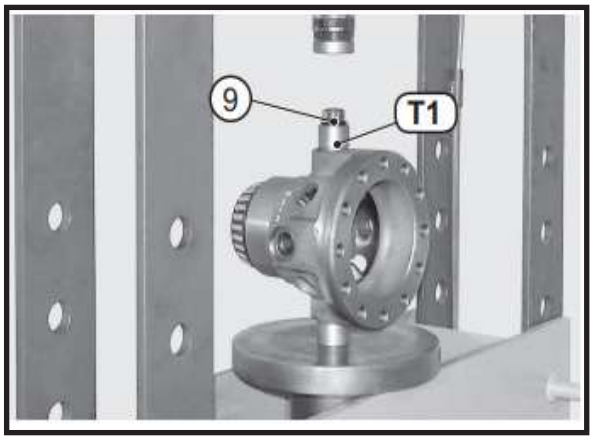

FIGURE 19: Place the differential carrier (**12**) under the press, position guide bushing T2 and insert the planetary pin (**9**).

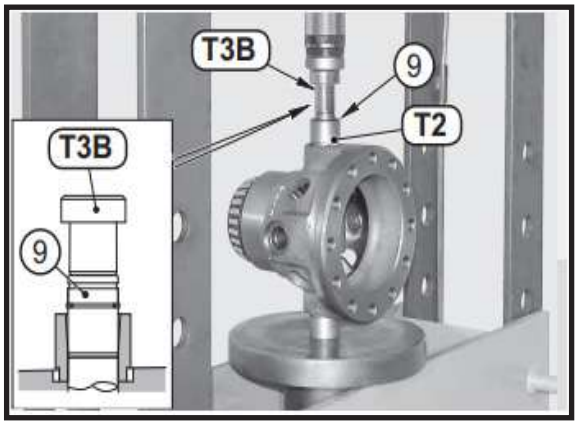

FIGURE 20: Put press tool T3B on top of the planetary wheel pin (**9**).

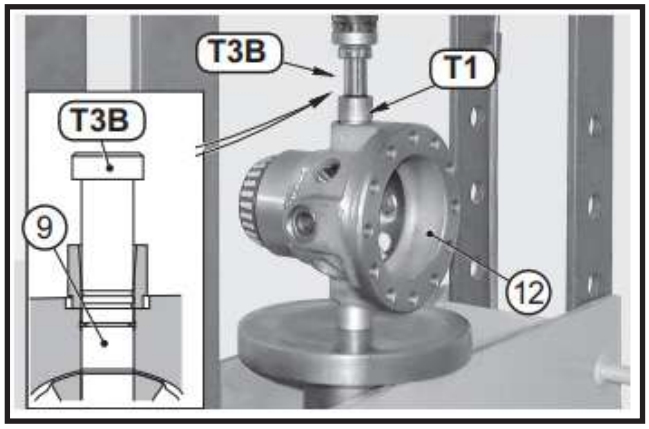

FIGURE 21: Press T3B pin all the way down.

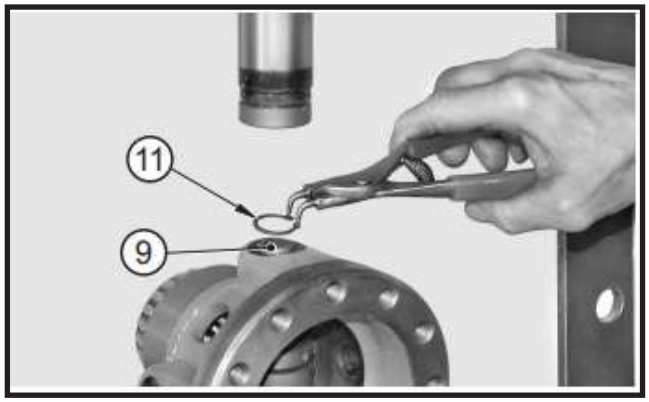

FIGURE 22: Remove press tool T3B, bushing T2 and fit the snap ring (**11**) on the pin (**9**).

i	**CAUTION**

Set the pliers following the correct procedure shown in END-STOP PLIER SETTING.

i	**CAUTION**

Make sure that the snap ring centers the seat and that it rests on the surface of the differential carrier. Repeat the operations on the other planetary pins.

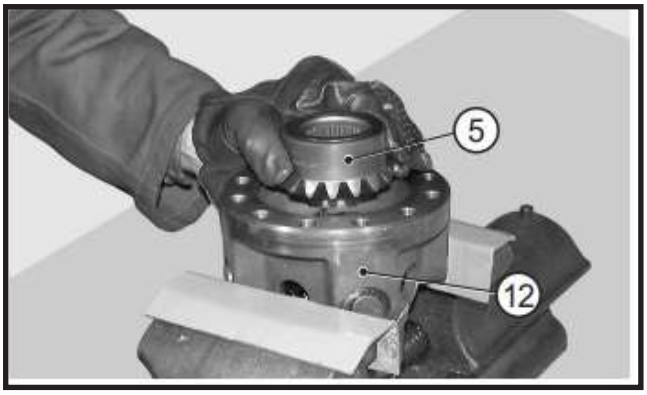

FIGURE 23: Position the second planetary gear (**6**) in the differential carrier (**12**).

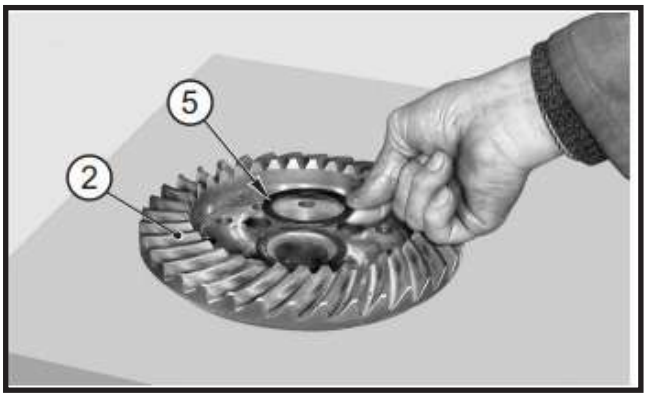

FIGURE 24: Position the shim washer (**5**) on the ring gear (**2**).

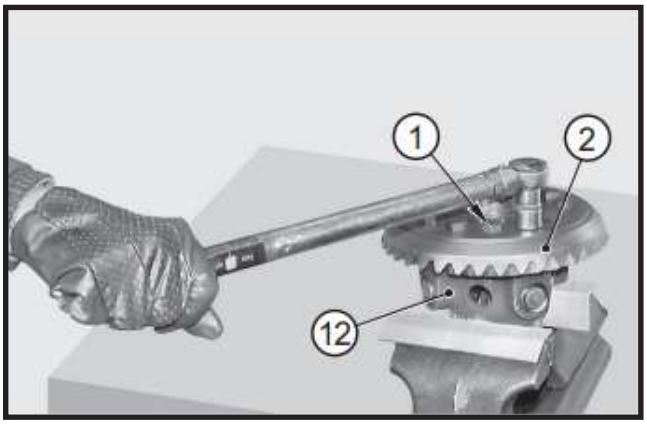

FIGURE 25: Position the ring gear (**2**) on the differential carrier (**12**) and lock it with screws (**1**) applied with Loctite 242. Torque wrench setting for screws: 94-105 ft-lb (128 - 142 N·m).

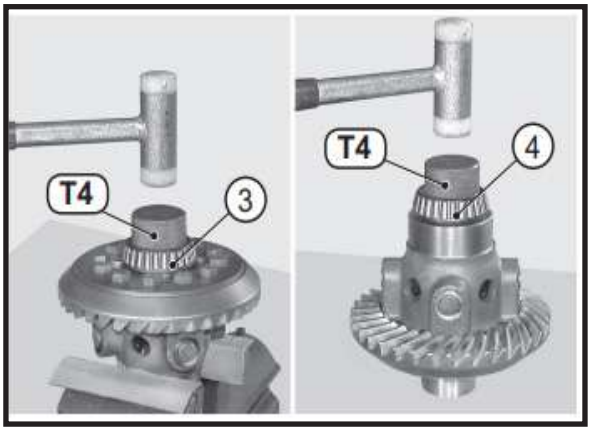

FIGURE 26: Install the bearings (**3, 4**) using tool T4.

SPECIAL TOOLS

T1

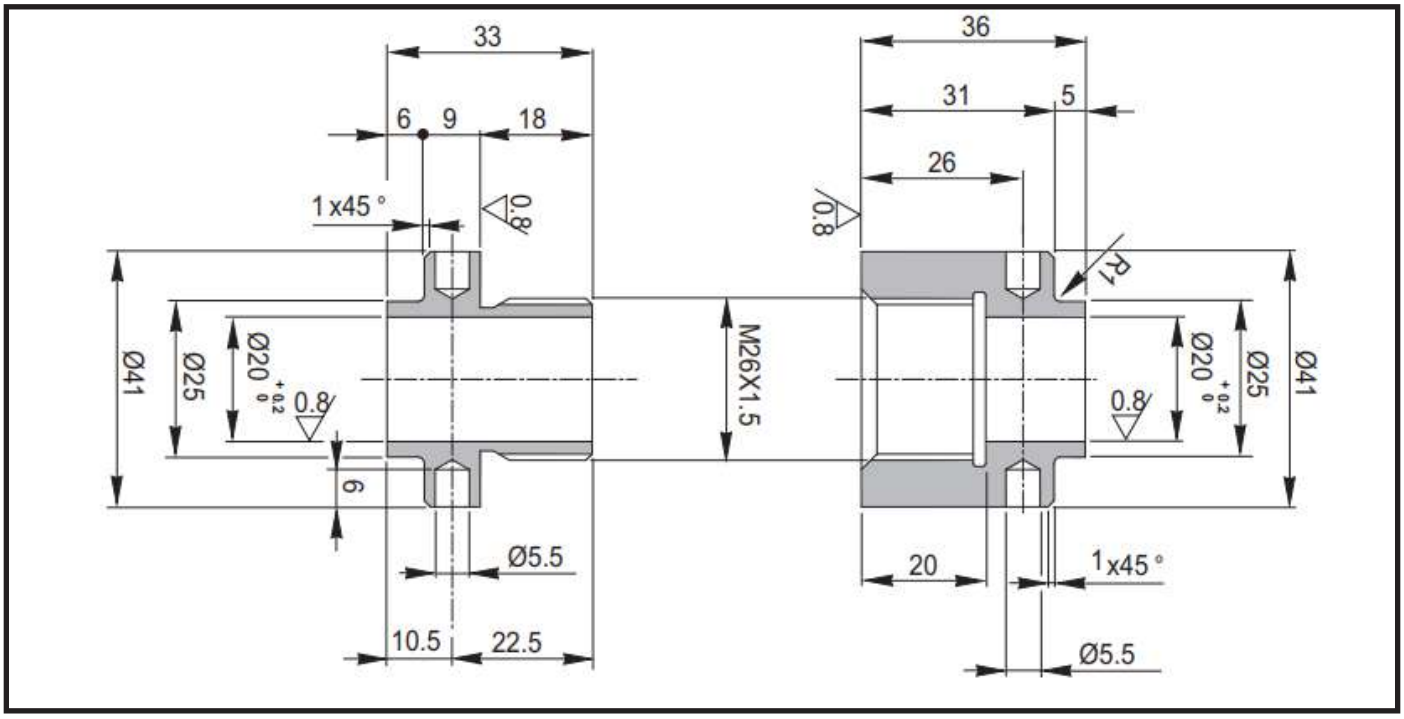

T2

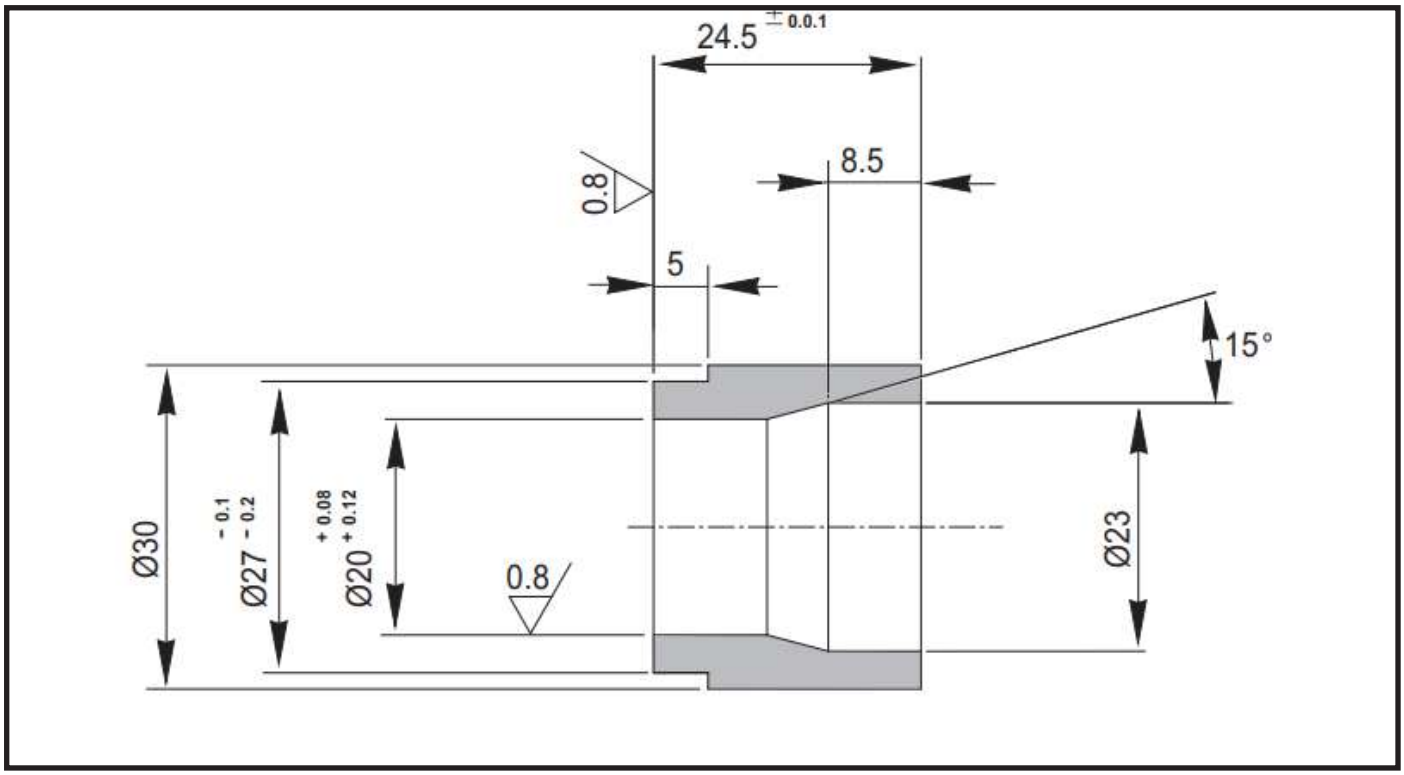

T3

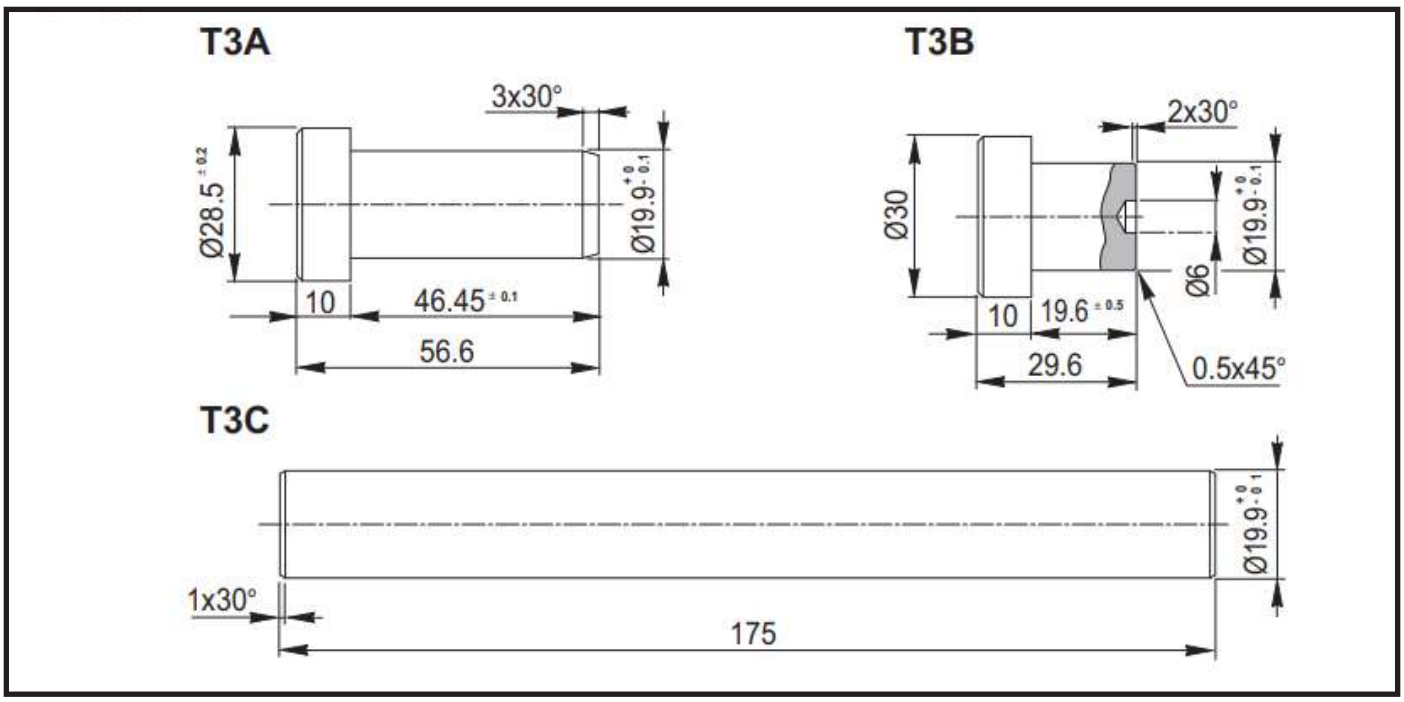
T3A
3x30°
Ø28.5 ± 0.2
Ø19.9 +0 -0.1
10
46.45 ± 0.1
56.6
T3B
2x30°
Ø30
Ø19.9 +0 -0.1
Ø6
10
19.6 ± 0.5
29.6
0.5x45°
T3C
Ø19.9 +0 -0.1
1x30°
175

T4

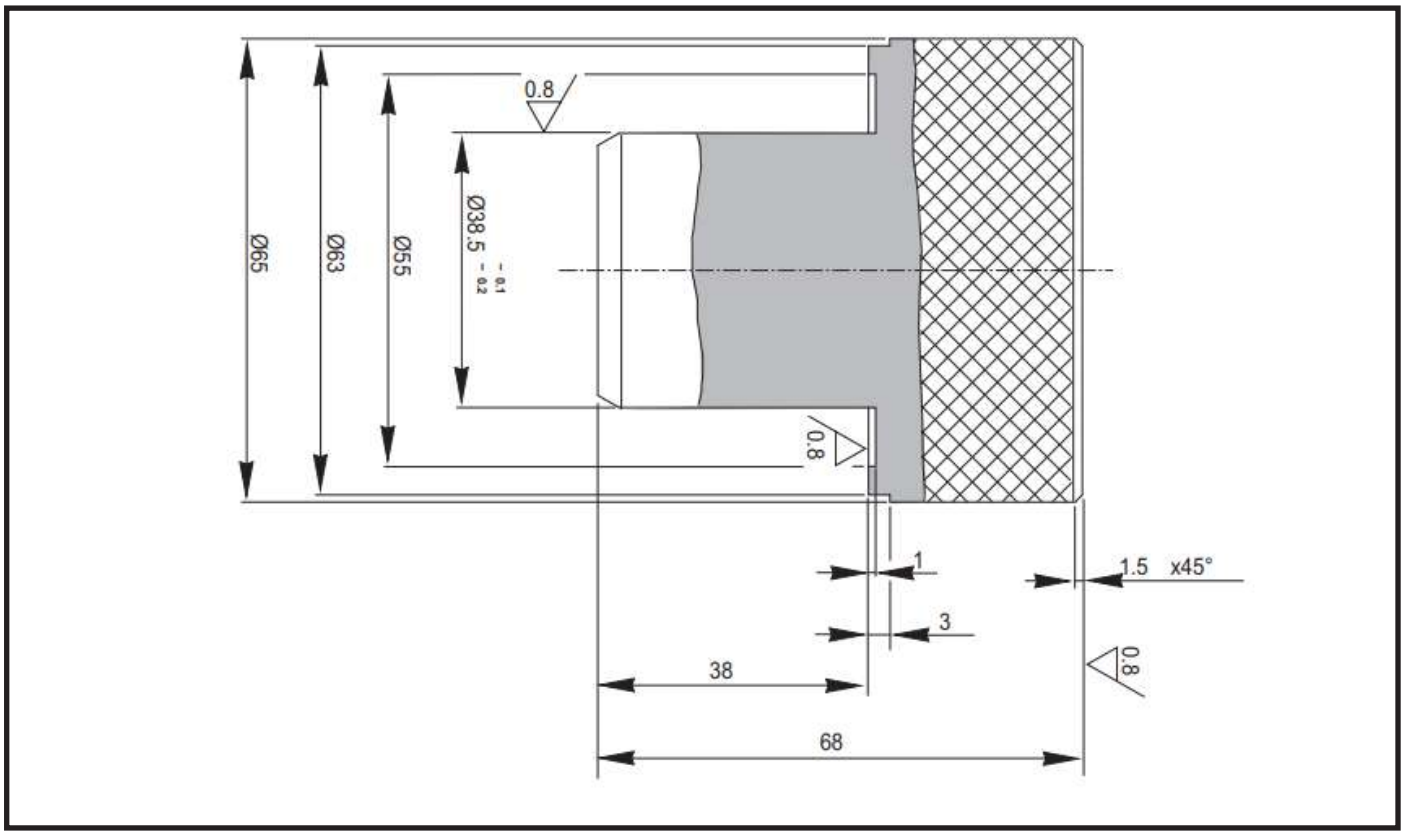
0.8
Ø65
Ø63
Ø55
Ø38.5 -0.1 -0.2
0.8
1
1.5 x45°
3
38
0.8
68

LIMITED SLIP DIFFERENTIAL UNIT (25% AND 45%)

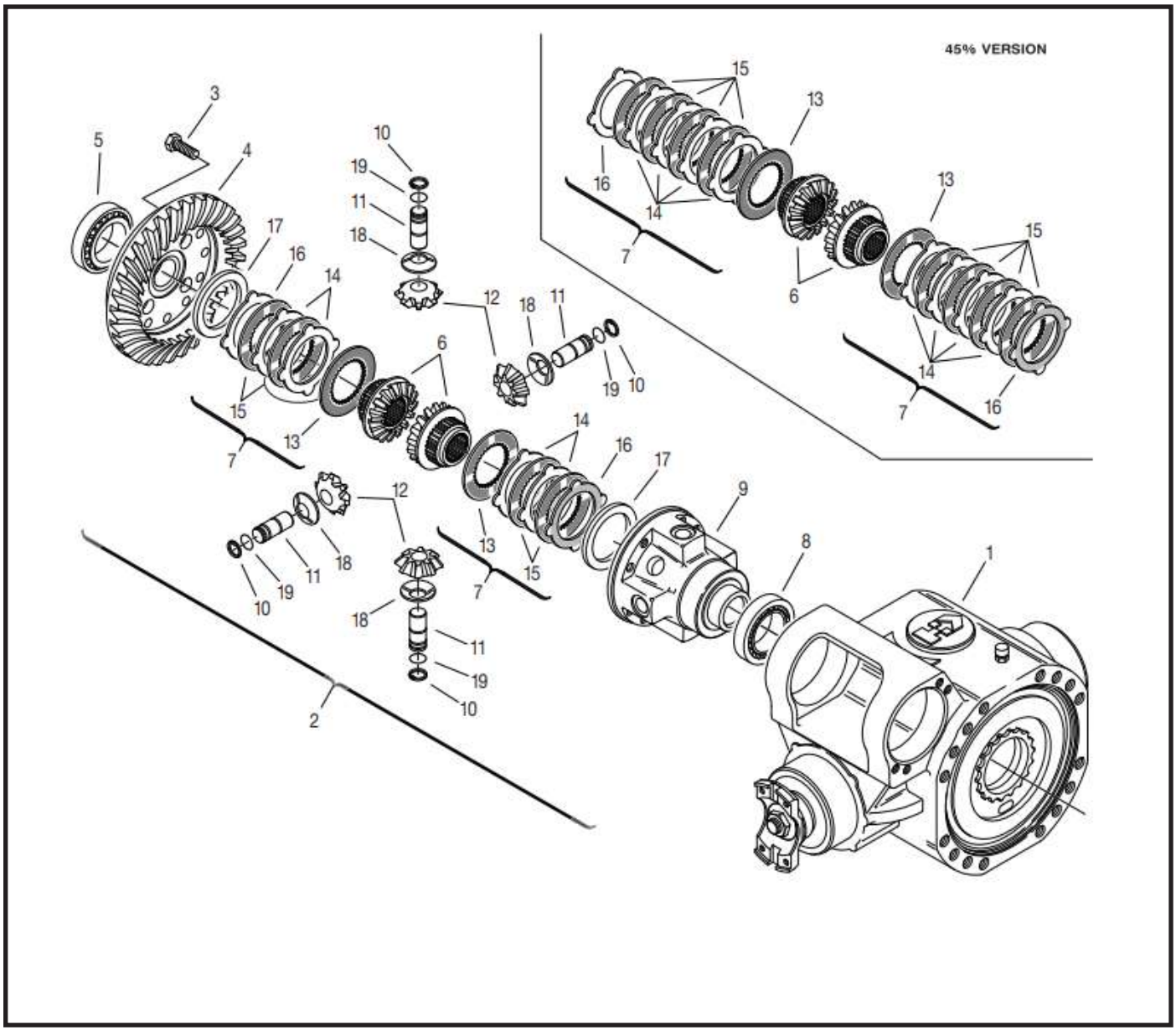

Disassembly

CAUTION

Before draining oil, release the internal pressure.

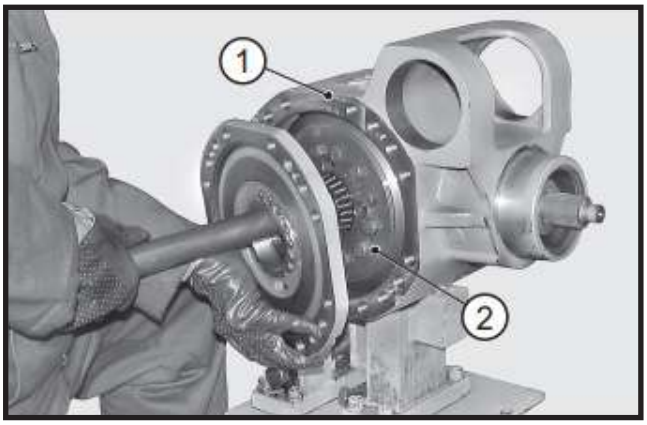

FIGURE 1: Remove the complete differential unit (**2**) from the central axle unit (**1**). For details, see DIFFERENTIAL UNIT.

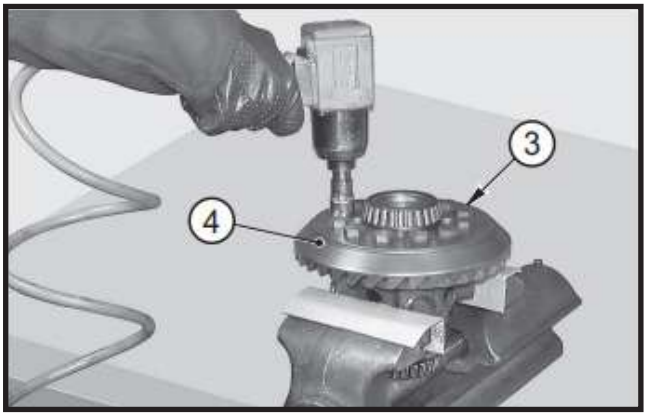

FIGURE 2: Remove the check screws (**3**) of the ring gear (**4**).

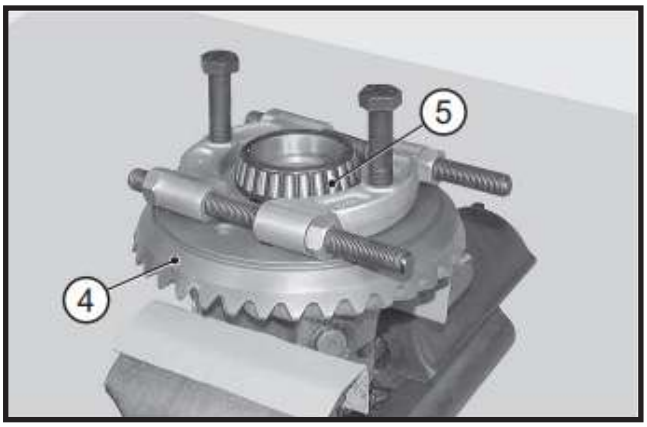

FIGURE 3: If bearing (**5**) needs replacing, remove it; remove ring gear (**4**).

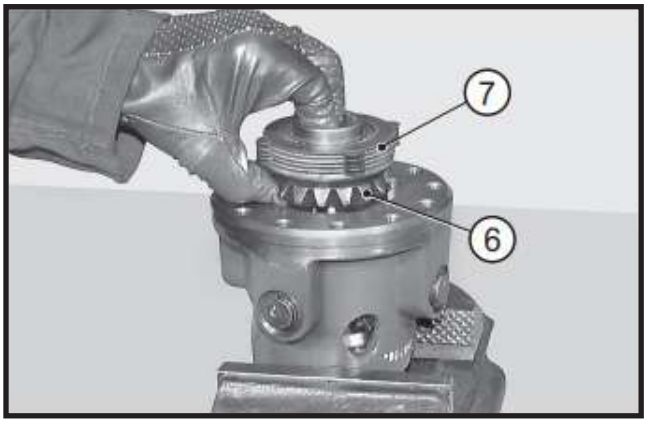

FIGURE 4: Remove the planetary gear (**6**) and the complete friction unit (**7**).

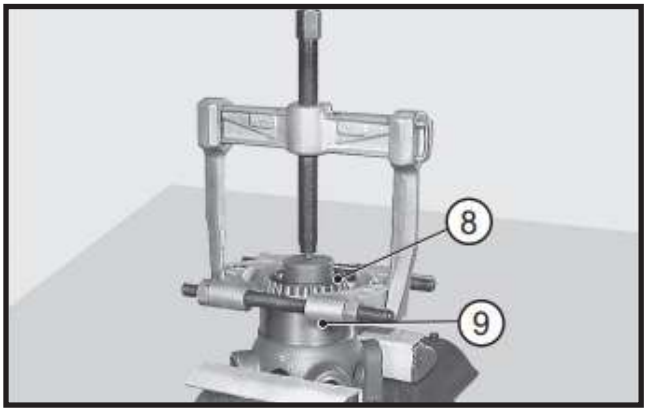

FIGURE 5: If bearing (**8**) needs replacing, extract it from the differential unit (**9**).

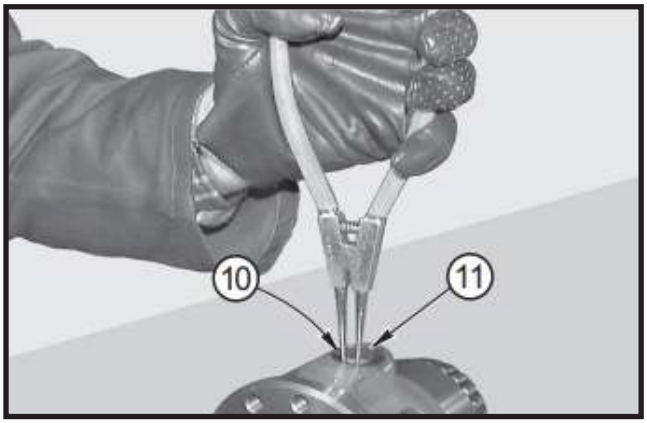

FIGURE 6: Remove the snap rings (**10**) from the pins (**11**) of the planetary gears (**12**).

CAUTION

Set the pliers following the correct procedure shown in END-STOP PLIER SETTING.

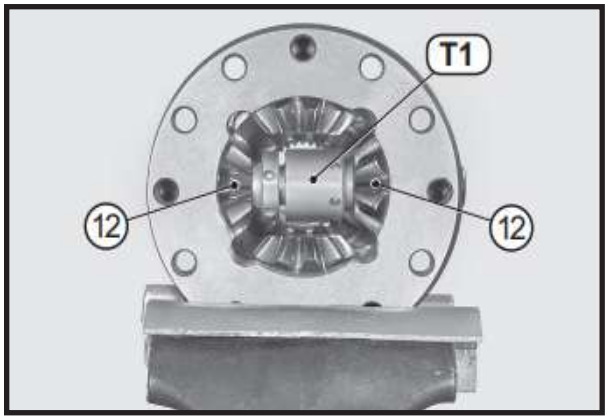

FIGURE 7: Introduce tool T1 inbetween the planetary gears (**12**).

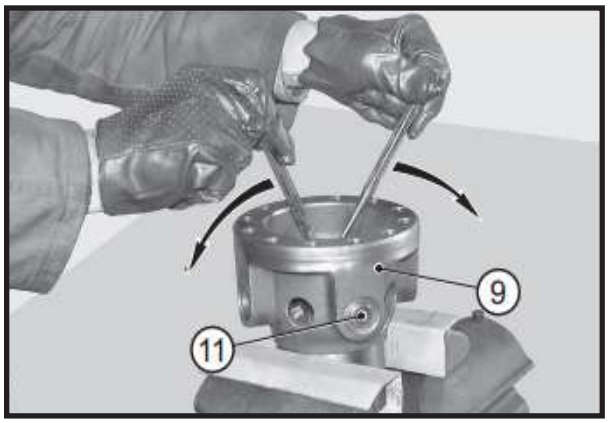

FIGURE 8: Using two pin-drivers, engage tool T1 in between the planetary gear (**12**).

CAUTION

Carefully check that tool T1 keeps in an aligned position with the pins (11) when locked.

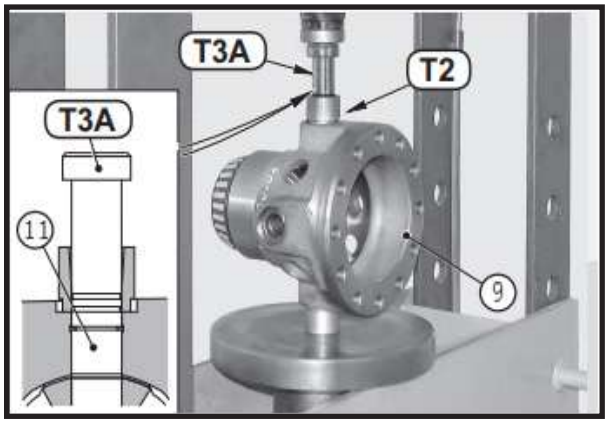

FIGURE 9: Place the differential unit (**9**) under a press, position guide bushing T2 and insert press tool T3A. Press press tool T3A to end of stroke.

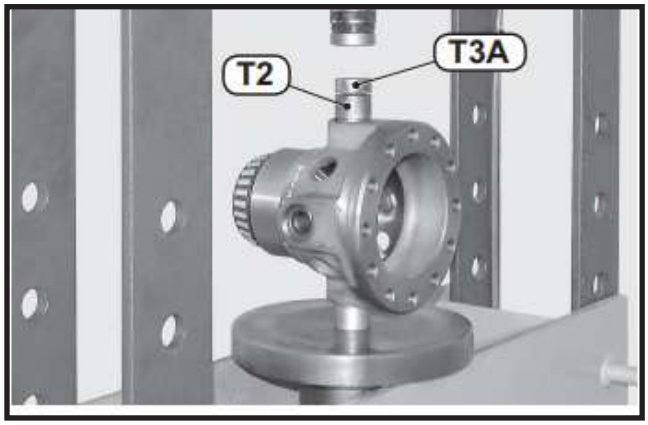

FIGURE 10: Remove press tool T3A and bushing T2.

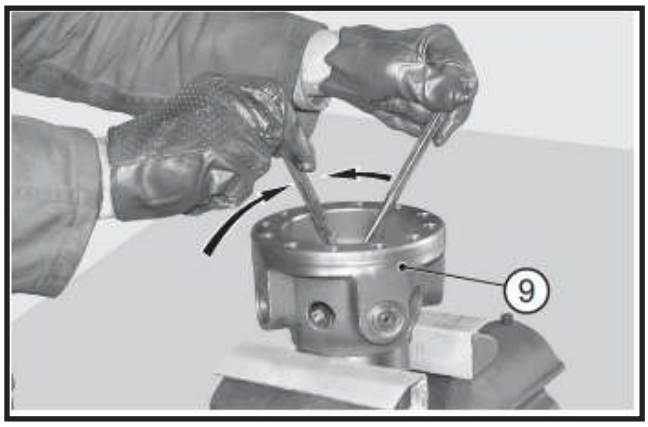

FIGURE 11: Remove tool T1 and planetary pin (**11**) with it.

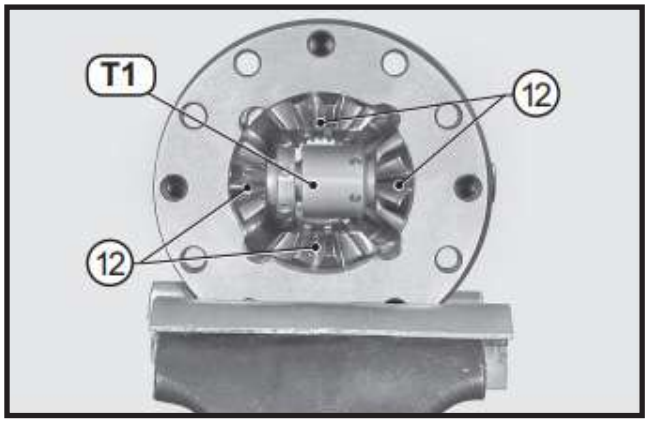

FIGURE 12: Leaving the released planetary in its position, lock again tool T1. Repeat pin extraction operation on the second planetary pin (**11**). Repeat the same operations on the remaining pins.

FIGURE 13: Remove tool T1 and extract from the differential unit (**9**) the two final planetary gears (**12**), the 2nd differential side gear (**6**) and the complete friction assembly concerned (**7**).

Assembly

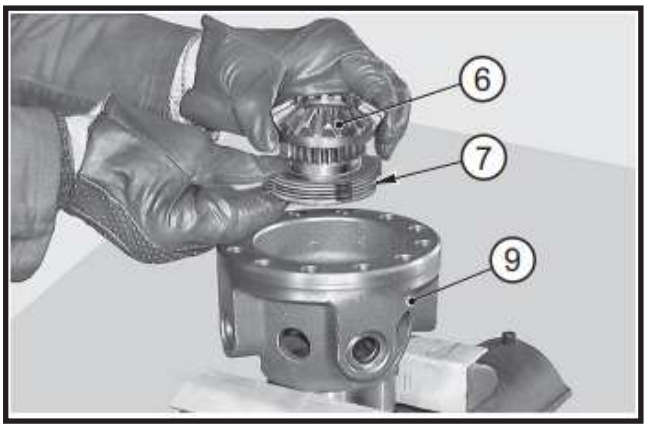

FIGURE 14: Place the friction disc assembly (**7**) - suitable for the specific type of slipping and differential side gear (**6**) into the differential unit (9). The composition of the unit is illustrated in the points below.

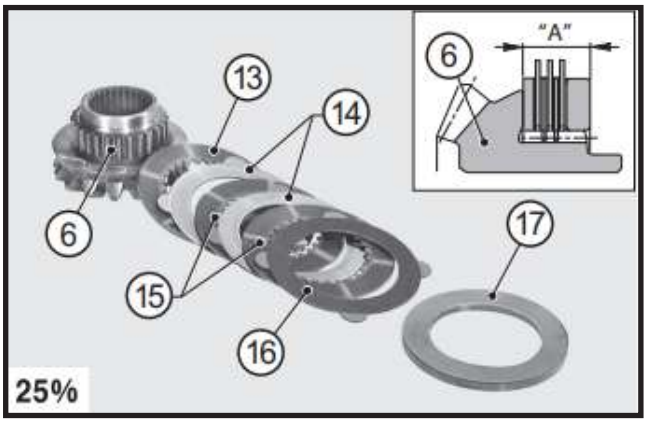

FIGURE 15: 25% FRICTION UNIT COMPOSITION Friction ring with inner disc (**13**), intermediate discs (**14**) and friction discs (**15**) alternated, outer disc (**16**) and spacer (**17**). Predefined friction discs quote: A = 0,72 ± 0,004 in (18,2 ± 0,1 mm) In case of new discs pack (as spare part), dip the complete disc pack in oil at least 8 hours before assembly, for details about oil see MAINTENANCE INTERVALS.

CAUTION

As to rings (**13**, **16**), the side without notches must face outwards.

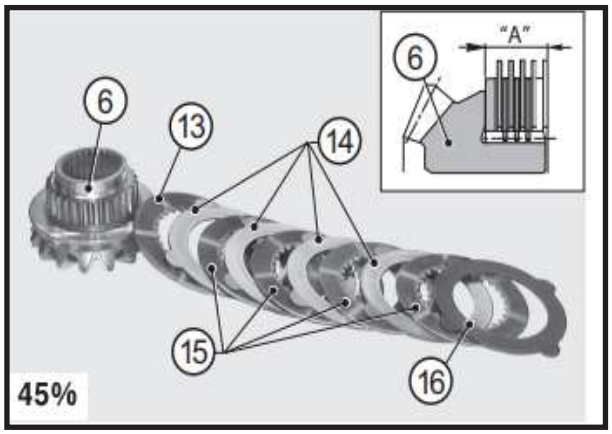

FIGURE 16: 45% FRICTION UNIT COMPOSITION Friction ring with inner disc (**13**), intermediate discs (14) and friction discs (**15**) alternated, outer disc (**16**) and spacer (**17**). Predefined friction discs quote:

A = 0,73 ± 0,004 in (18,3 ± 0,1 mm) measurement obtained with preload of 6000 - 6200 N.

In case of new discs pack (as spare part), dip the complete disc pack in oil (with LS additive) at least 8 hours (plus 2 dripping hours) before assembly, for details about oil see MAINTENANCE INTERVALS.

CAUTION

As to rings (**13**, **16**), the side without notches must face outwards.

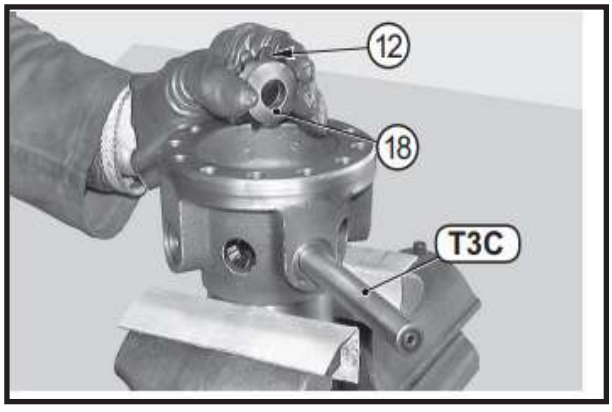

FIGURE 17: Position shim washer (**18**) and the first planetary gear (**12**). Hold in position with bar T3C.

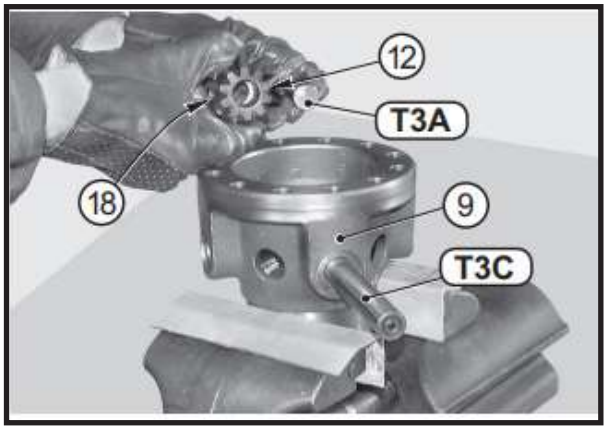

FIGURE 18: Using press tool T3A position the second planetary gear (**12**) and relative shim washer (**18**).

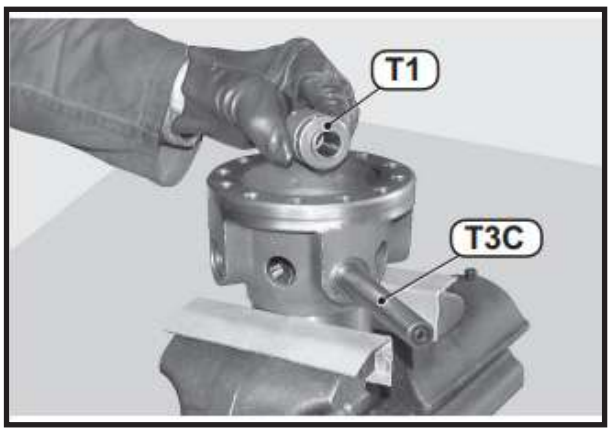

FIGURE 19: Insert tool T1 in-between the two planetary gears (**12**). Align the complete unit, pushing bar T3C in as far as it will go, until press tool T3A is expelled.

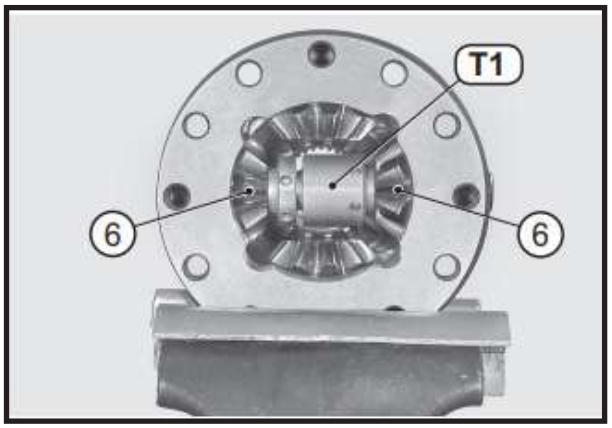

FIGURE 20: Lock tool T1 behind the planetary gears (**12**). After locking the tool, remove bar T3C.

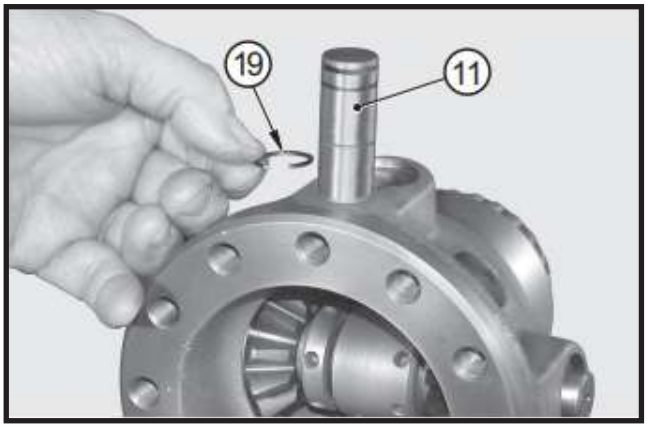

FIGURE 21: Fit snap rings (**19**) onto the pins (**11**).

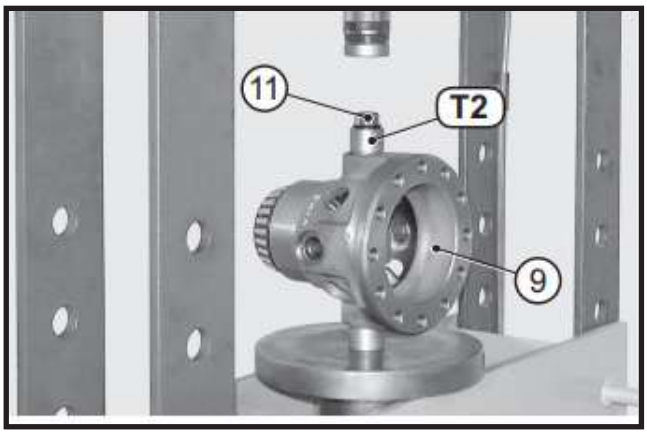

FIGURE 22: Position the differential unit (**9**) under the press, position bushing T2 and insert the planetary pin (**11**).

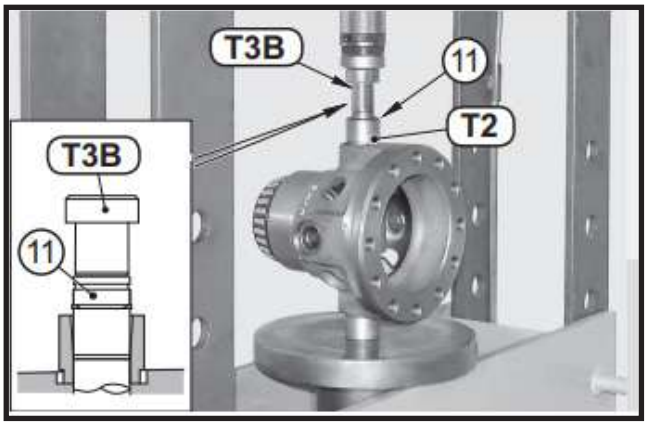

FIGURE 23: Place press tool T3B on top of the planetary pin (**11**).

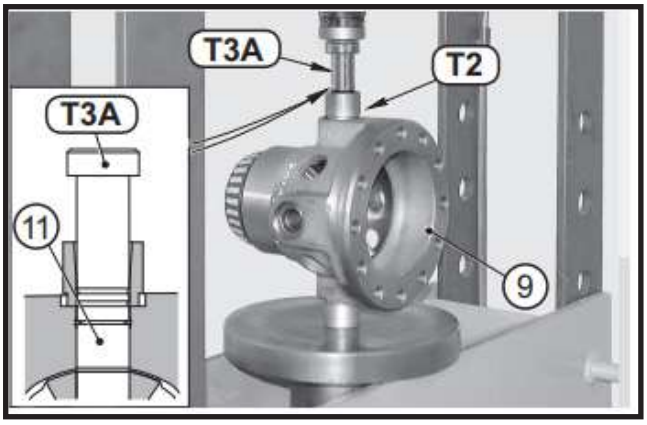

FIGURE 24: Press press tool T3B as far down as it will go.

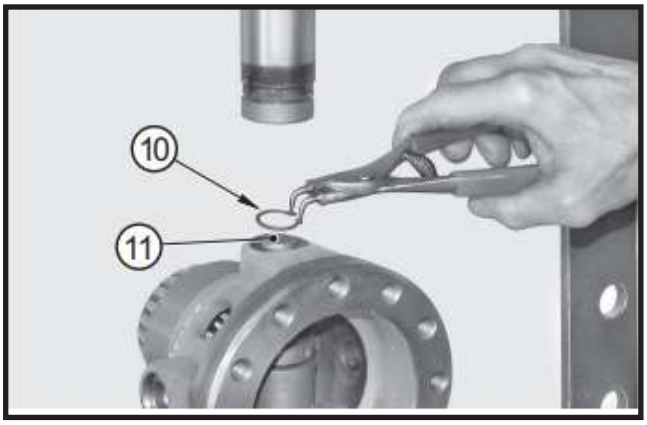

FIGURE 25: Remove press tool T3B, bushing T2 and fit the snap ring (**10**) onto the pin (**11**).

CAUTION

Set the pliers following the correct procedure shown in END-STOP PLIER SETTING.

CAUTION

Make sure that the snap ring centers seat and positions itself on the differential unit face. Repeat the operations on the other planetary pins.

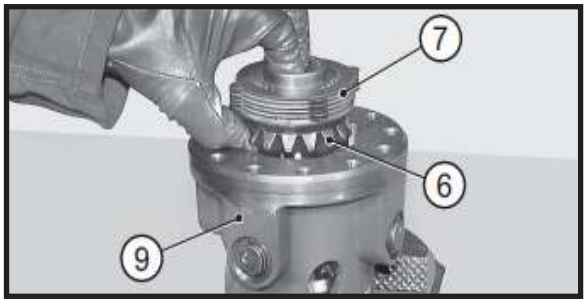

FIGURE 26: Check that planetary have a light clearance in relation to the first planetary gear. Position the second differential side gear (**6**) and the second friction disc assembly (**7**) into the differential unit (**9**).

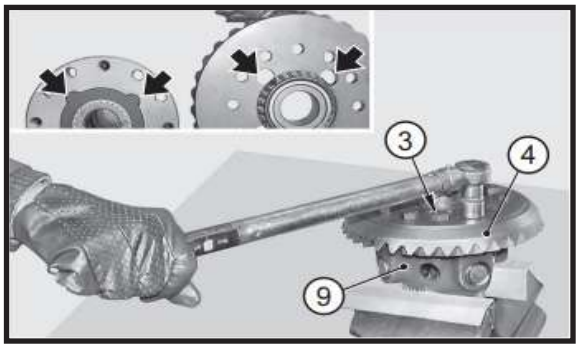

FIGURE 27: Line the lubrication holes up with the slots in the differential carrier. Orient the holes of the ring gear (**4**) towards the protrusions of the braking unit. Position the ring gear (**4**) on the differential unit (**9**) and lock it with the screws (**3**) previously coated with Loctite 242. Torque wrench setting for screws: 94-105 ft-lb (128 - 142 N·m).

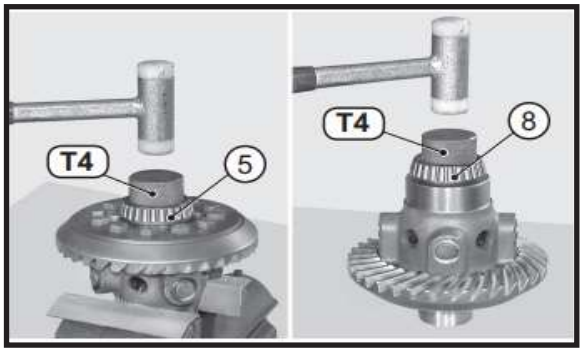

FIGURE 28: If bearings (**5, 8**) have been removed, install them using tool T4.

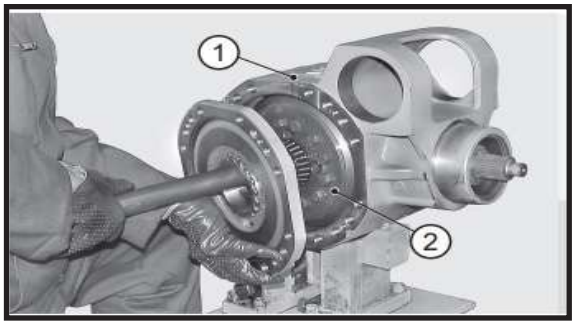

FIGURE 29: Install the complete differential assembly (**2**) into the central housing (**1**).

SPECIAL TOOLS

T1

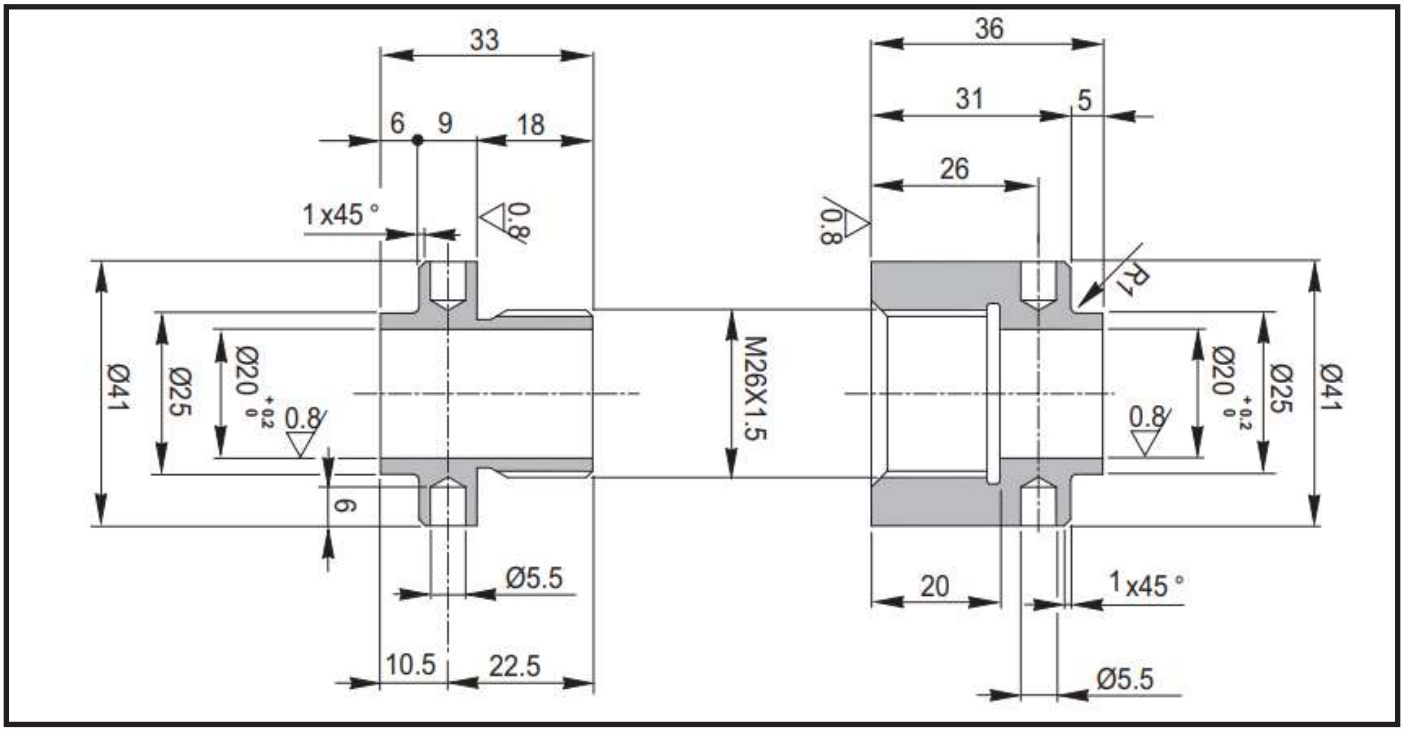

T2

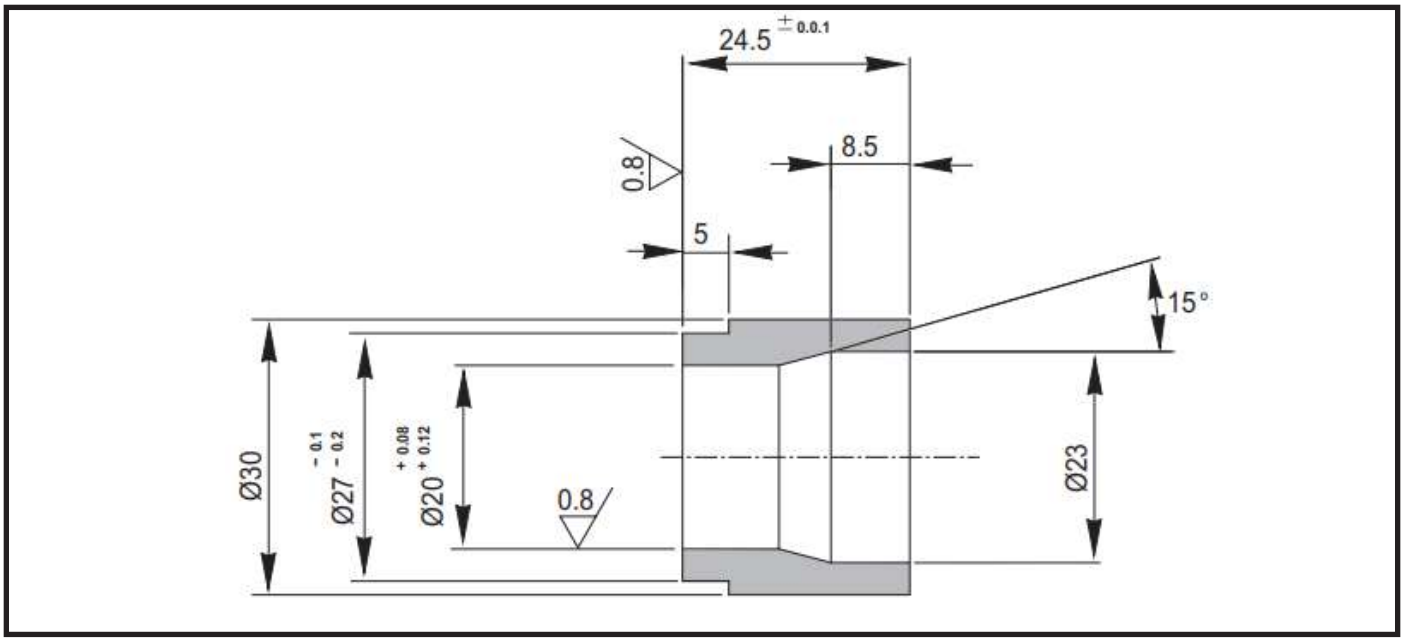

T3

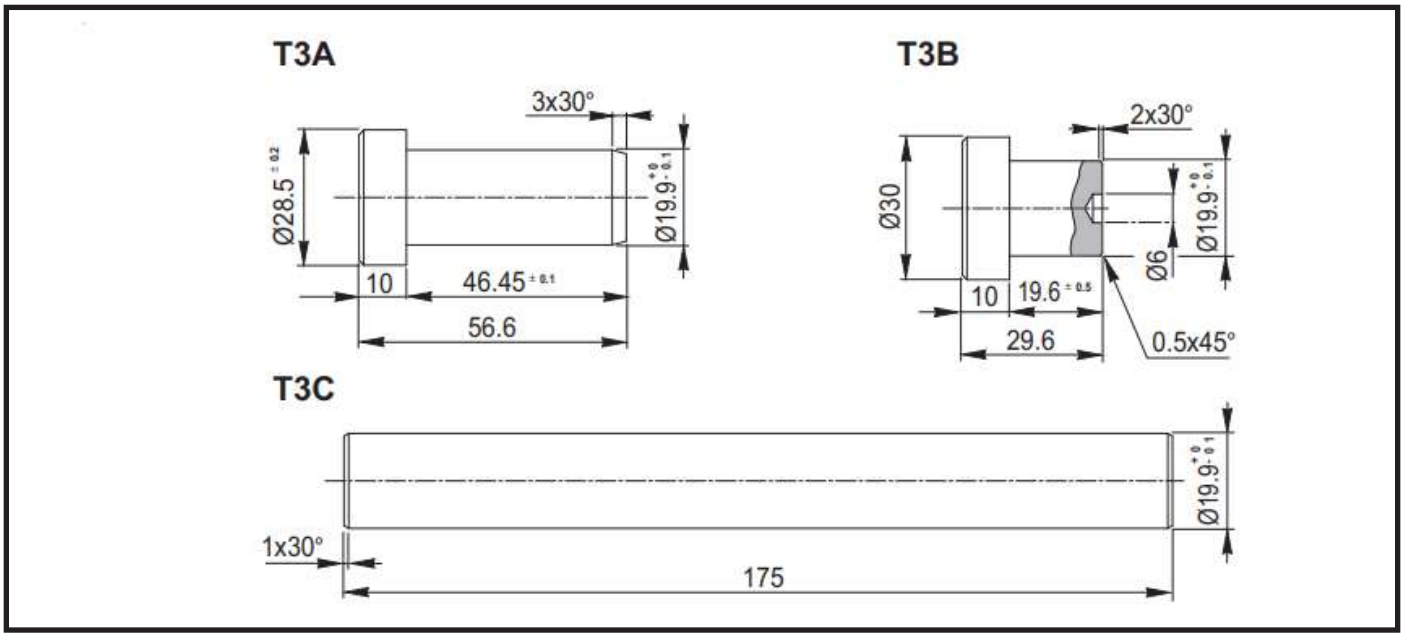
T3A
3x30°
Ø28.5 ± 0.2
Ø19.9 +0 -0.1
10
46.45 ± 0.1
56.6
T3B
2x30°
Ø30
Ø19.9 +0 -0.1
Ø6
10
19.6 ± 0.5
29.6
0.5x45°
T3C
Ø19.9 +0 -0.1
1x30°
175

T4

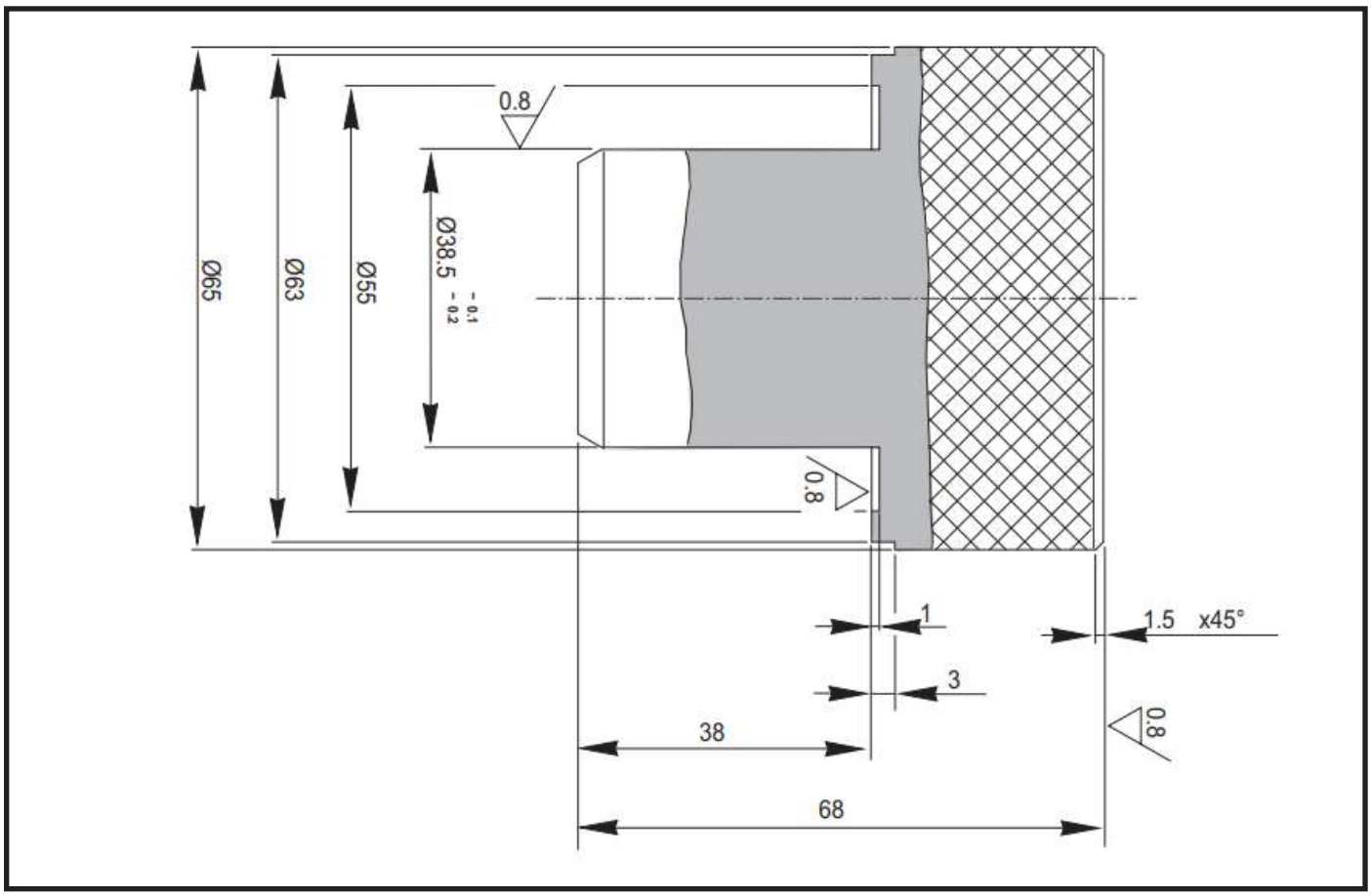
0.8
Ø65
Ø63
Ø55
Ø38.5 -0.1 -0.2
0.8
1
1.5 x45°
3
38
0.8
68

HYDRAULIC DIFFERENTIAL LOCK

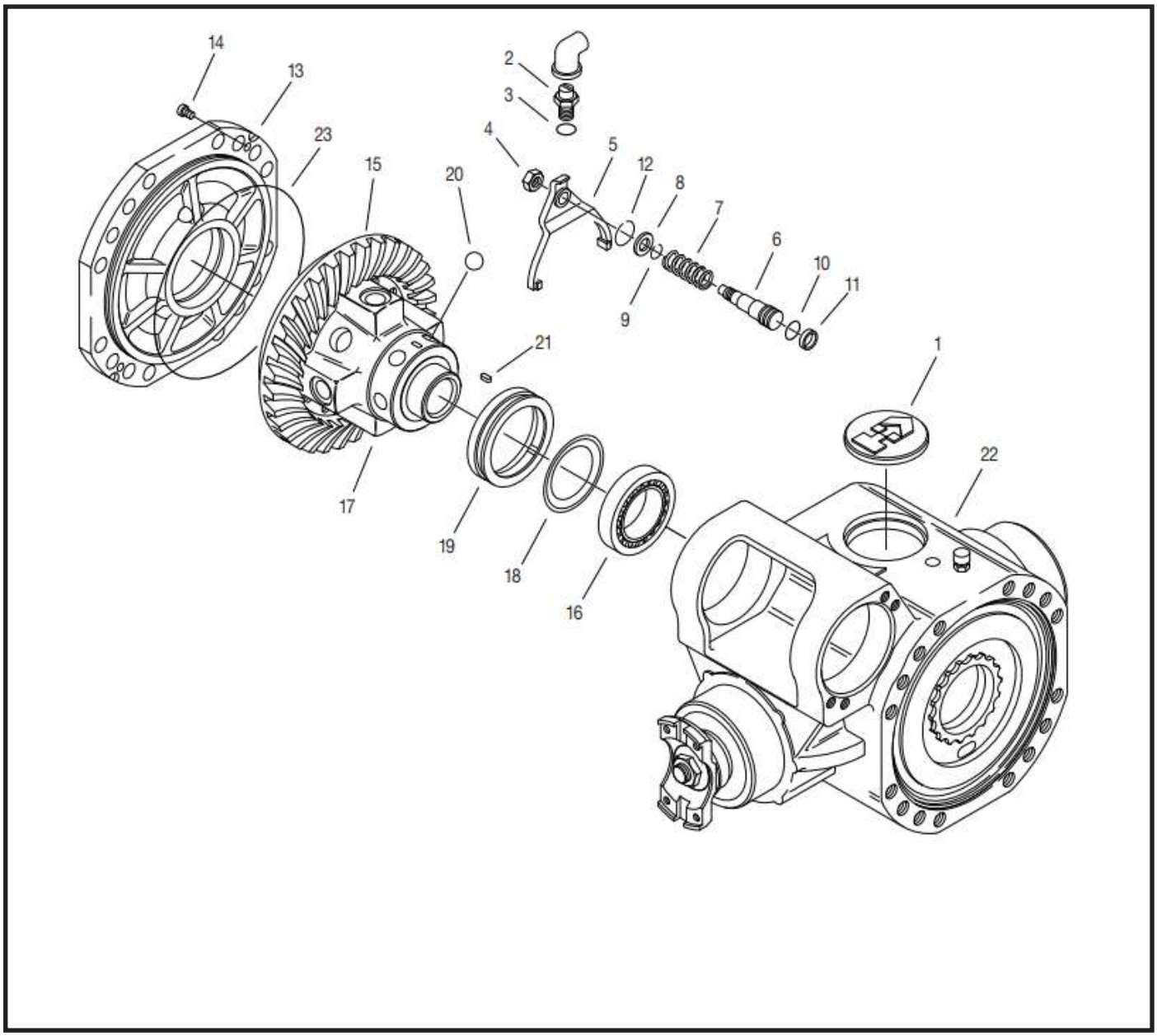

DISASSEMBLY

CAUTION

Before draining oil, release the internal pressure.

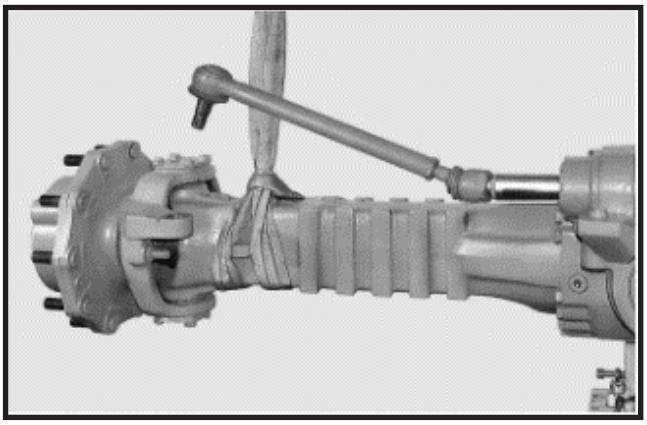

FIGURE 1: Remove the arms.

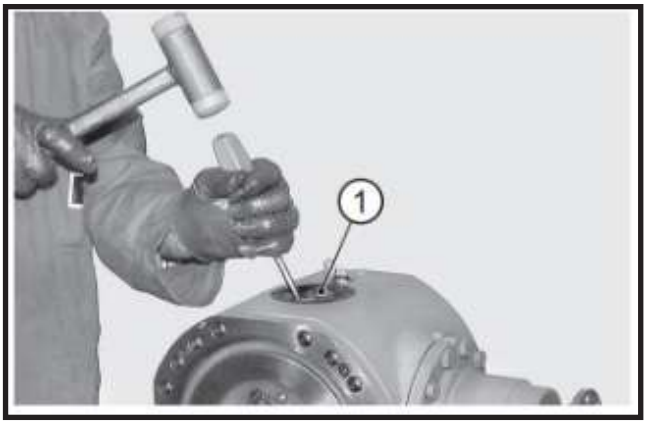

FIGURE 2: Remove the top cap (**1**).

FIGURE 3: Remove the security switch (**2**).

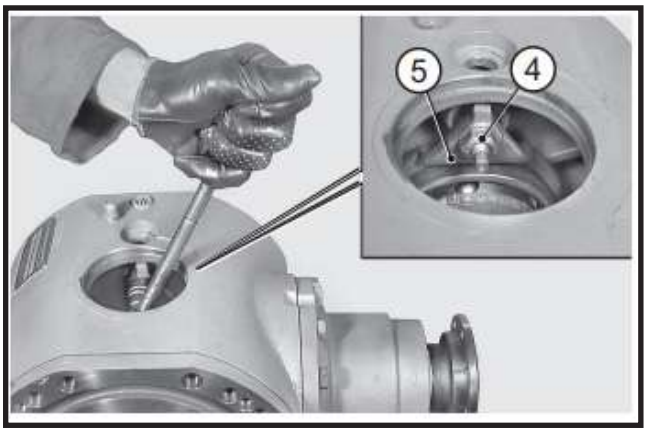

FIGURE 4: Loosen the lock nut (**4**) of selector fork (**5**) by approximately 2 turns.

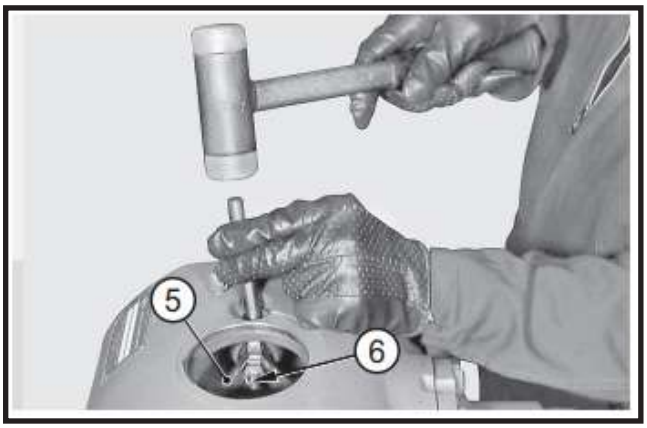

FIGURE 5: Using a metal punch and a hammer, disengage selector fork (**5**) from piston cone (**6**).

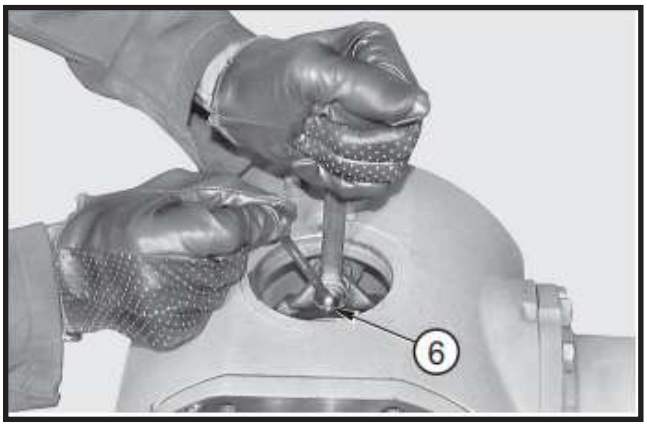

FIGURE 6: Using two wrenches, lock piston (**6**) and remove nut (**4**).

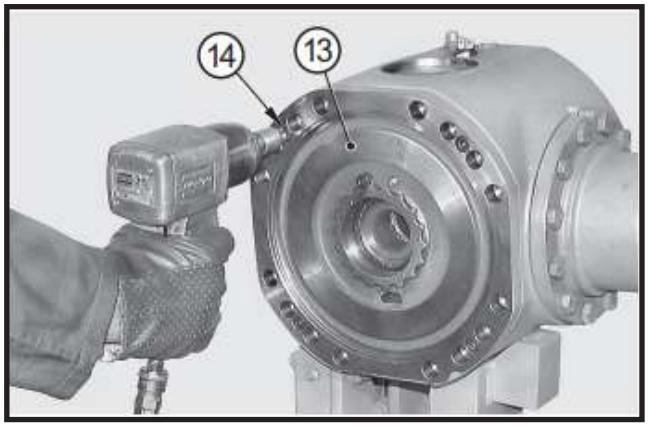

FIGURE 7: Remove screws (**14**) and remove the intermediate cover (**13**).

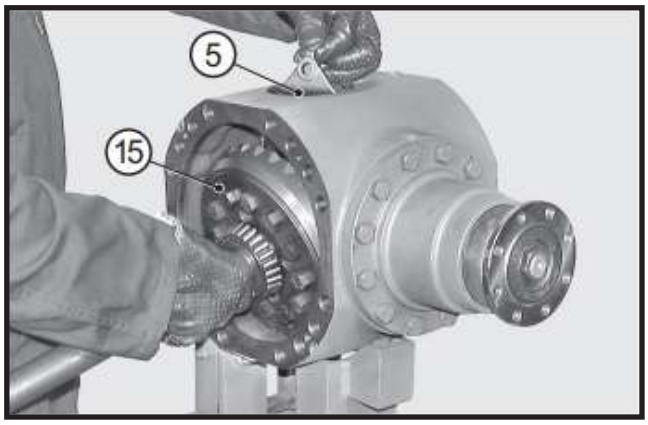

FIGURE 8: Disconnect selector (**5**) from piston (**6**). While holding the selector up, remove the differential unit (**15**).

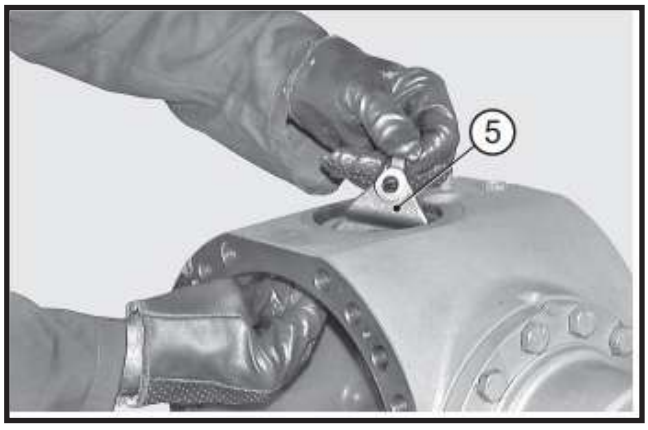

FIGURE 9: Extract selector fork (**5**).

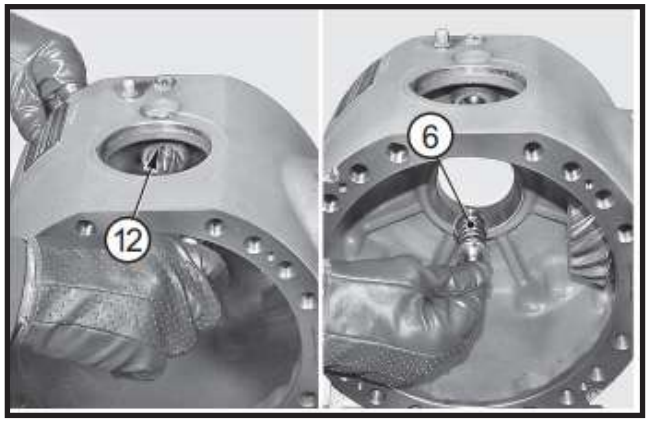

FIGURE 10: Remove snap ring (**12**) and complete piston (**6**).

CAUTION

Set the pliers following the correct procedure shown in END-STOP PLIER SETTING.

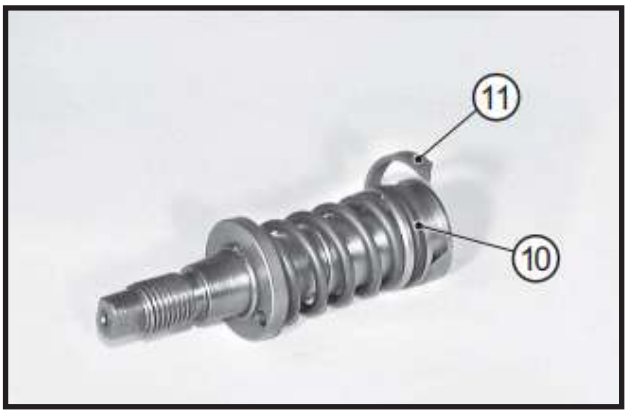

FIGURE 11: Remove guide ring (**11**) and o-ring (**10**).

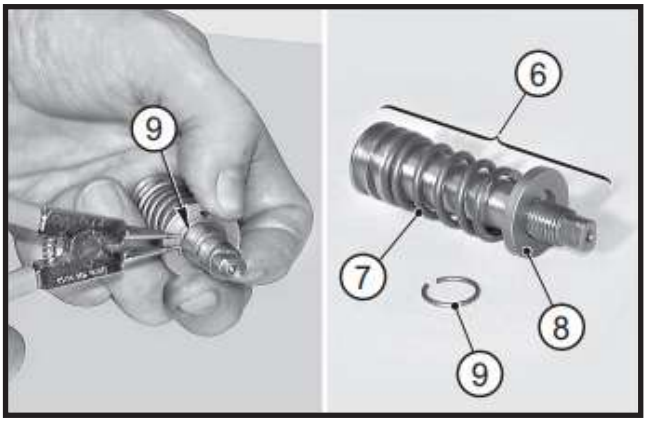

FIGURE 12: Remove snap ring (**9**) and take piston unit (**6**) apart. Remove all component parts.

CAUTION

Set the pliers following the correct procedure shown in END-STOP PLIER SETTING.

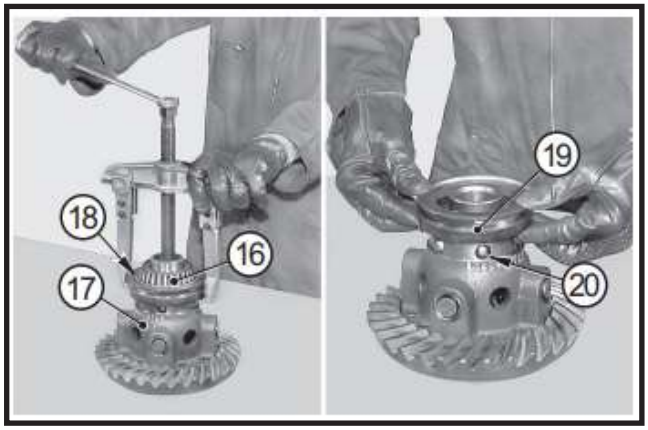

FIGURE 13: Remove bearing (**16**) from the differential carrier (**17**) as well as the stop ring (**18**), the sleeve (**19**) and the spheres (**20**).

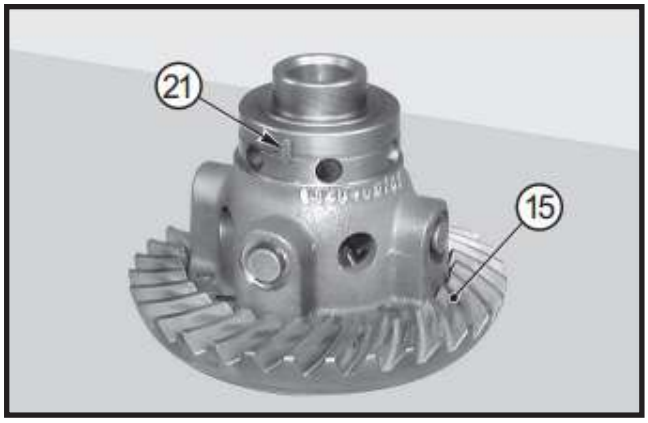

FIGURE 14: ONLY IF NECESSARY Remove the key (**21**) and disassemble the differential unit (**15**).

Assembly

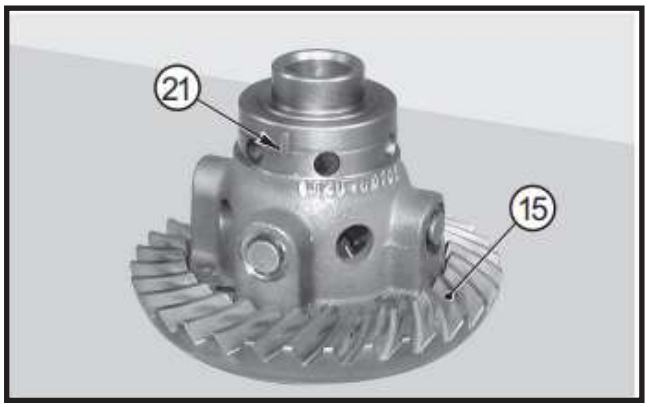

FIGURE 15: ONLY IF PREVIOUSLY DISASSEMBLED Assemble the differential unit (**15**). Position the key (**21**) in the differential unit (**19**).

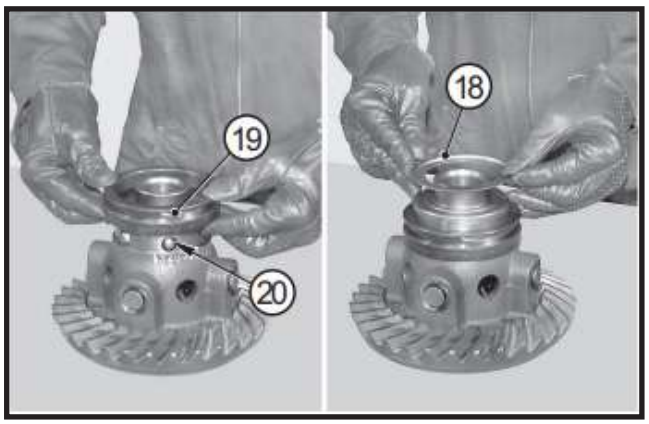

FIGURE 16: Install spheres (**20**), sleeve (**19**) and stop ring (**18**).

FIGURE 17: Install bearing (**16**) onto the differential carrier (**17**).

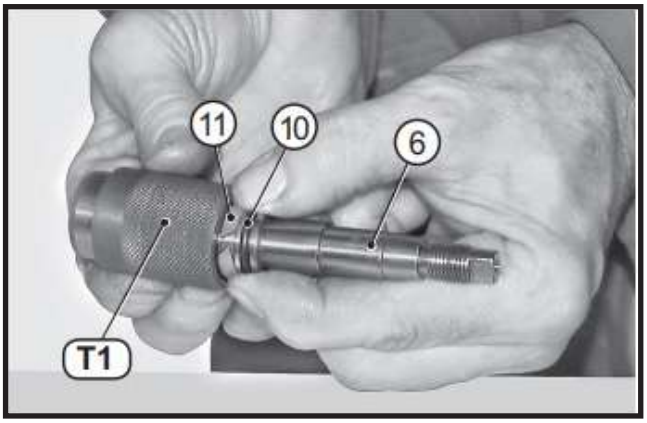

FIGURE 18: Fit o-ring (**10**) and guide ring (**11**) onto the piston (**6**). Lubricate seals and insert the assembly into tool T1.

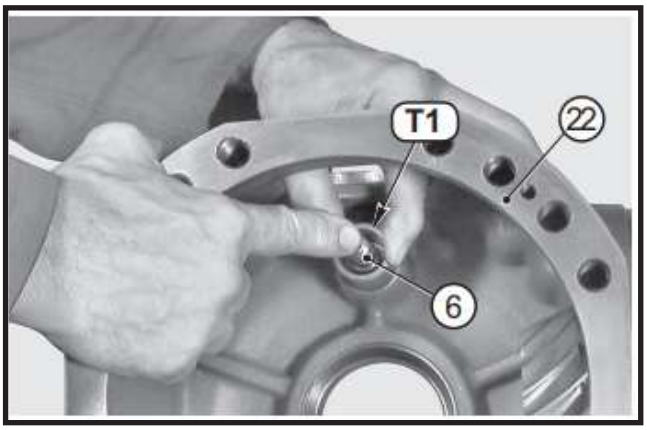

FIGURE 19: Insert tool T1 in the central unit (**22**) and push the piston (**6**) into the seat. Remove tool T1.

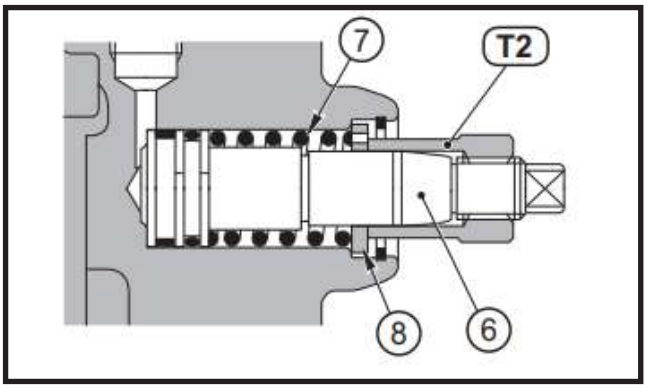

FIGURE 20: Install spring (**7**) and washer (**8**) on the piston (**6**) and install tool T2.

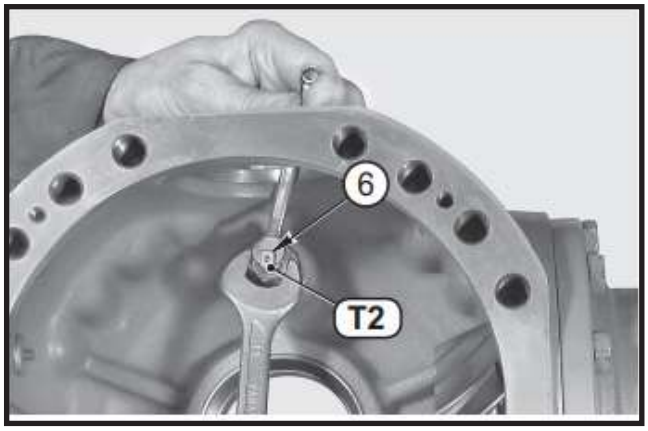

FIGURE 21: Screw tool T2 (See drawing T2 p. 194) on the thread of the piston (**6**) to compress the spring (**7**) and vacate the seat for installing the snap ring (**12**).

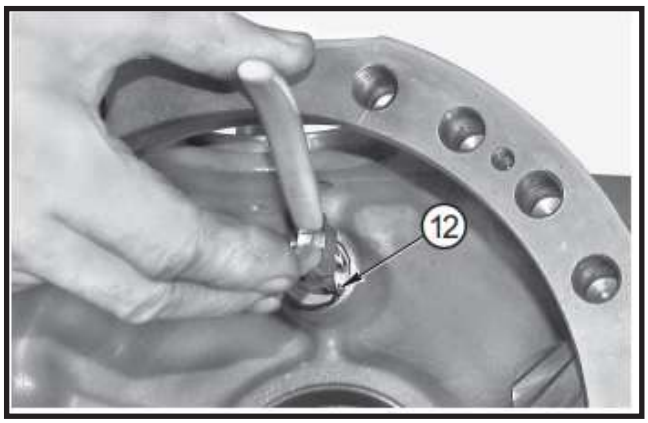

FIGURE 22: Install the snap ring (**12**). Remove tool T2 and fit the snap ring (**9**) of spring (**7**).

CAUTION

Set the pliers following the correct procedure shown in END-STOP PLIER SETTING.

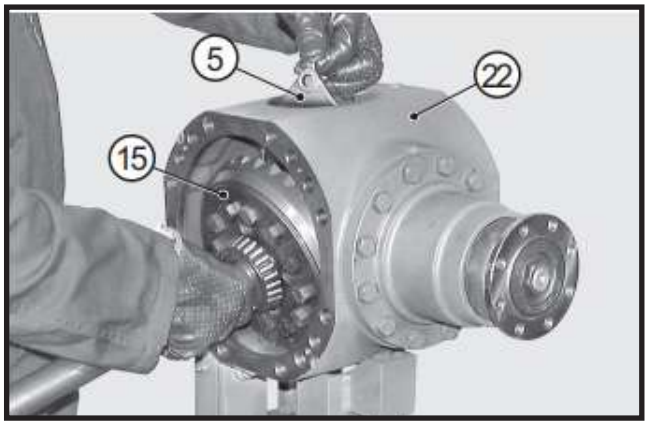

FIGURE 23: Insert the selector fork (**5**) and the differential unit (**15**) into the central unit (**22**). Engage the selector fork (**5**) in the coupling (**19**) and on the piston (**6**).

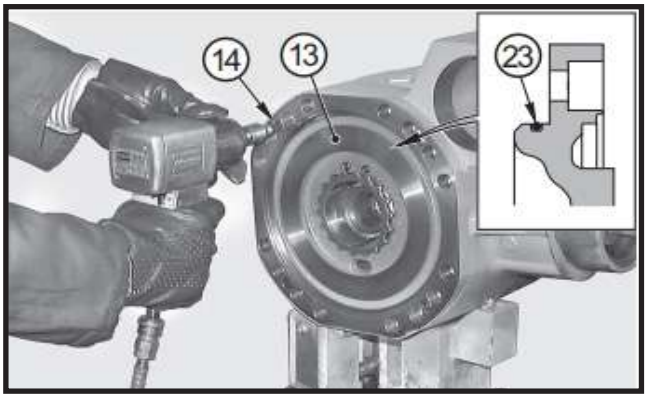

FIGURE 24: Install the intermediate cover (**13**) and lock it with screws (**14**). Tighten screws using a torque wrench setting of 17-19 ft-lb (23.8 - 26.2 N·m).

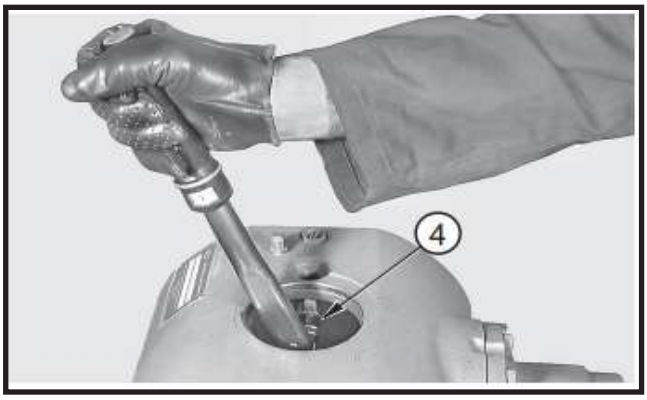

FIGURE 25: Install the lock nut (**4**) of the selector fork (**5**) and lock it with a torque wrench set to a torque of 52-55 ft-lb (70 - 75 N·m).

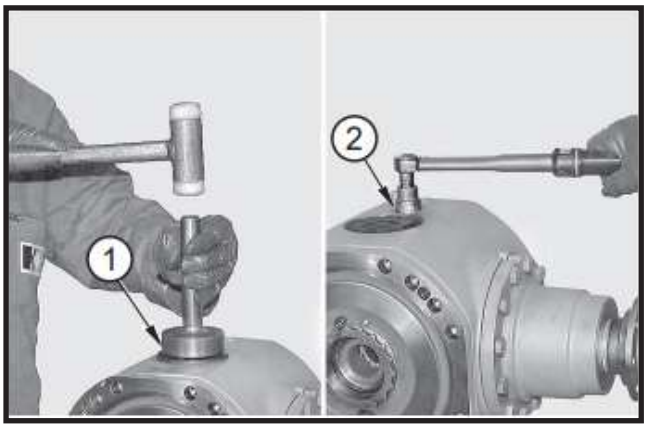

FIGURE 26: Install the security switch (**2**) complete with o-ring; torque wrench setting: maximum 22 ft-lb (30 N·m). If necessary, adjust differential unit clearances. Install the top cap (**1**) and the arms.

SPECIAL TOOLS

T1

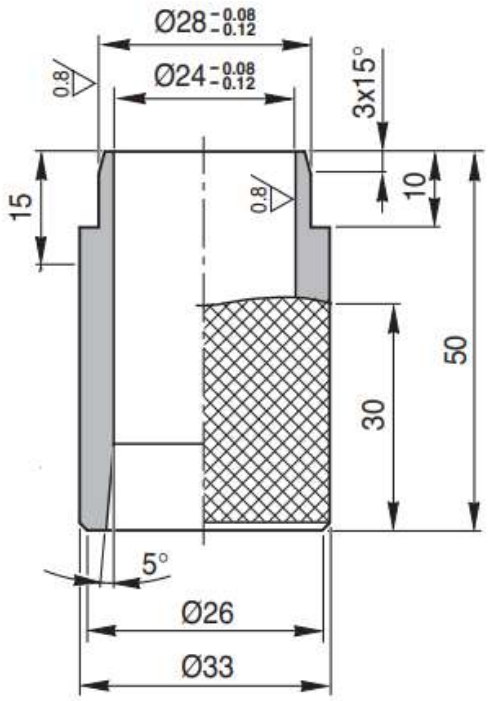

T2

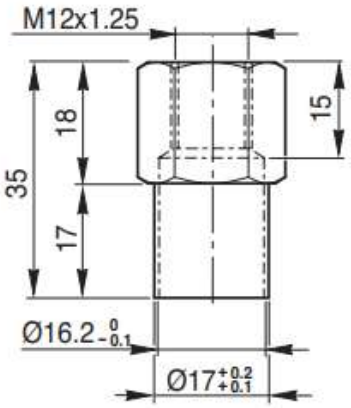

HYDRAULIC NEGATIVE BRAKE

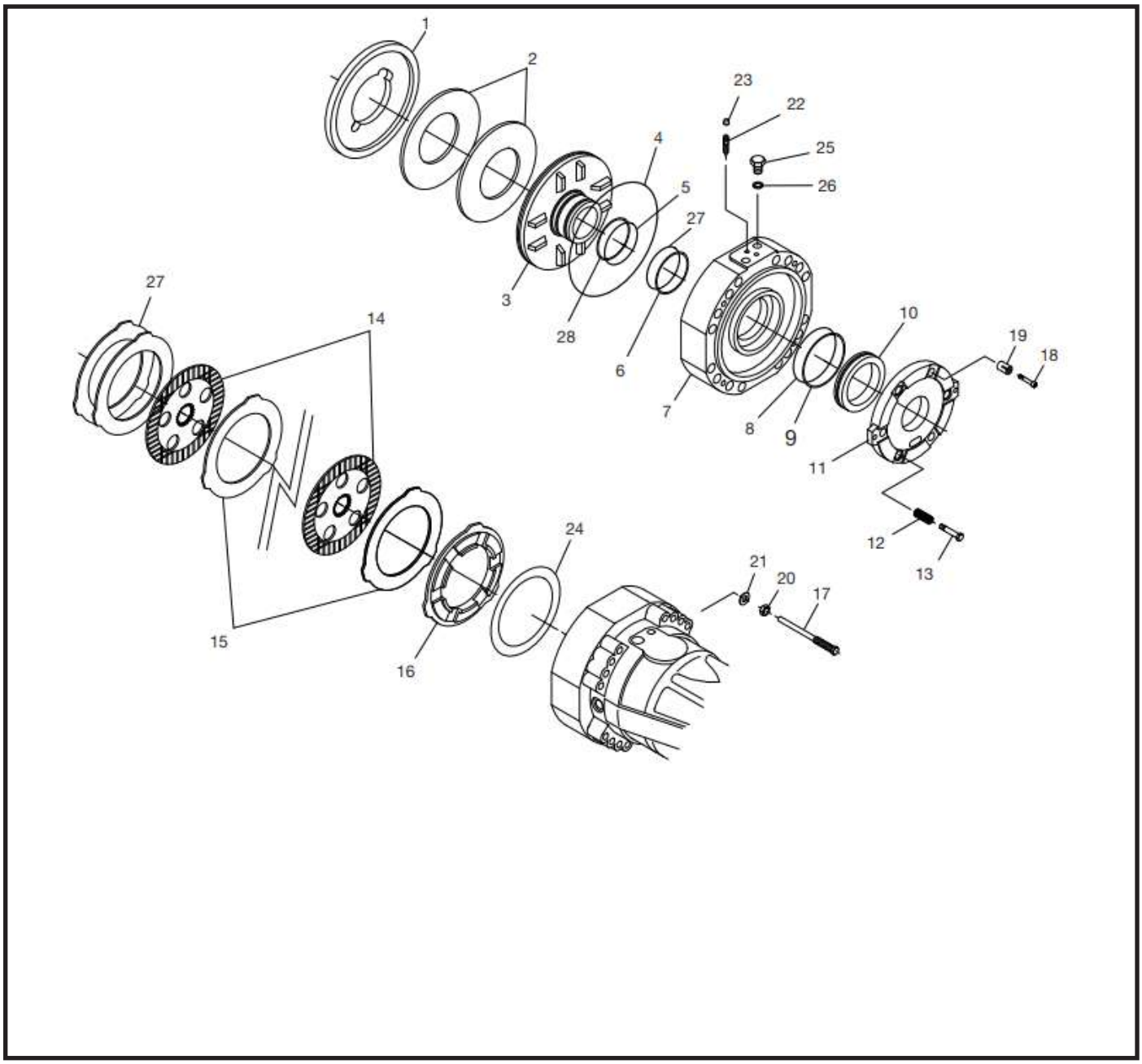

Disassembly

WARNING

Before maintaining brakes, when the axle is installed on the vehicle, follow all safety instructions in the Original Equipment Manufacturer (OEM) manual that came with the vehicle.

CAUTION

Before draining oil, release the internal pressure.

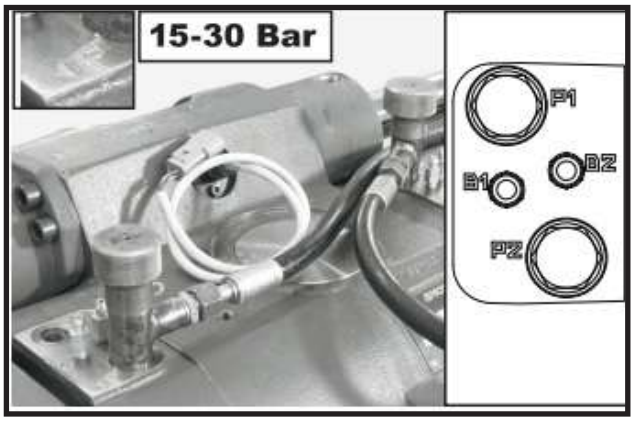

FIGURE 1: Connect an external pump to the union piece “P1” of the negative brake and introduce a pressure of 217.5-435 psi (15 - 30 bar) to eliminate the pressure of the Belleville washers (**2**).

WARNING

Always check that the hydraulic circuit test for leaks under pressure. Always use a cardboard or a panel to control the loss.

A leak from a hole of the size of a pin can cause serious injury. If fluid is injected into the skin it is necessary to seek immediate medical care.

FIGURE 2: Sling the arm to be removed and connect it to a hoist. Loosen and remove screws (**17**).

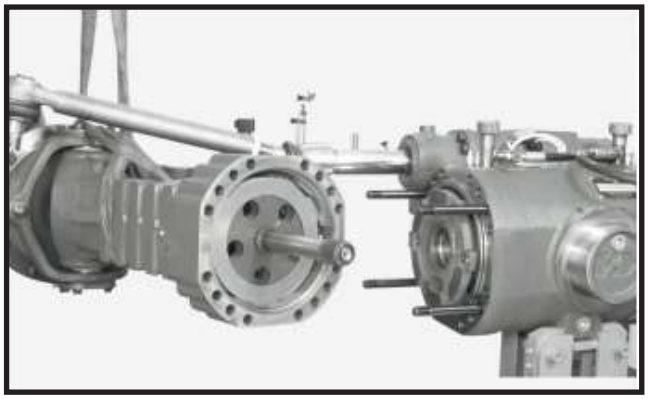

FIGURE 3: Remove arm together with brakes and axle shafts; lay down the arm vertically. Release pressure.

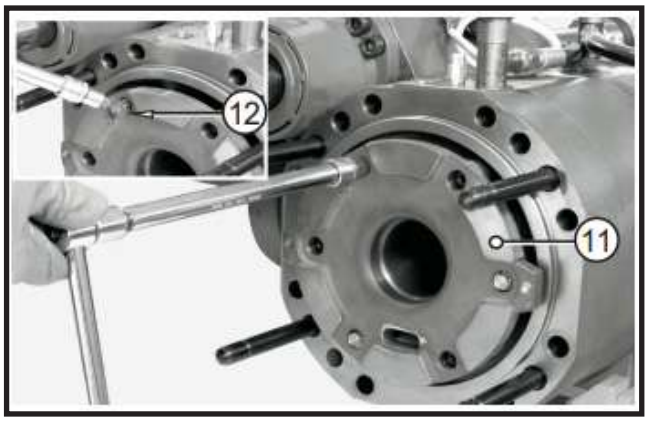

FIGURE 4: Remove the reversal springs (**12**) from the cover (**11**).

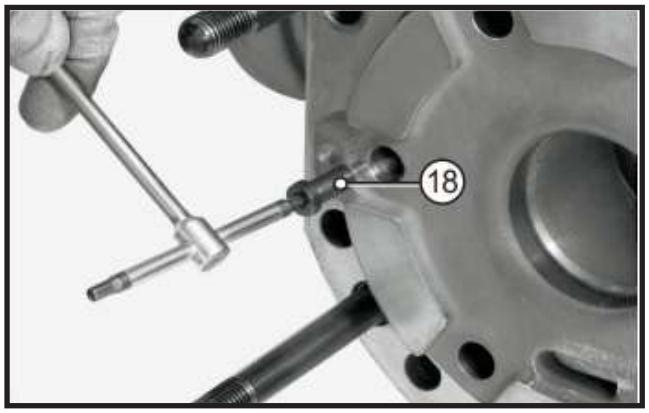

FIGURE 5: Remove the pin screws (**18**) guiding the cover (**11**).

¡	**CAUTION**
	If the screws are to be replaced, write down the different colors for the different brake gap.

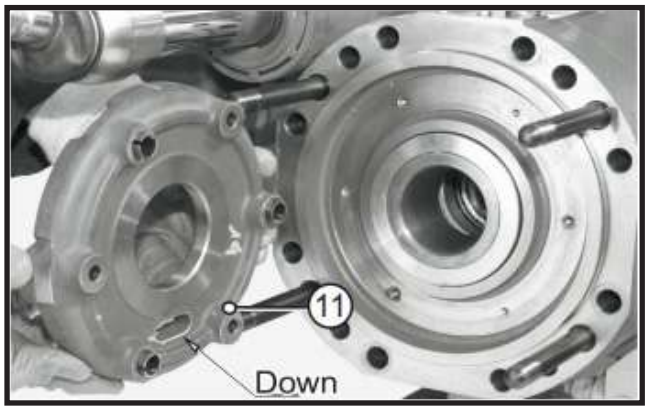

FIGURE 6: Write down their order of assembly and remove the counterwasher (**11**).

FIGURE 7: Loosen the studs and remove two of them.

FIGURE 8: Loosen the studs and remove two of them.

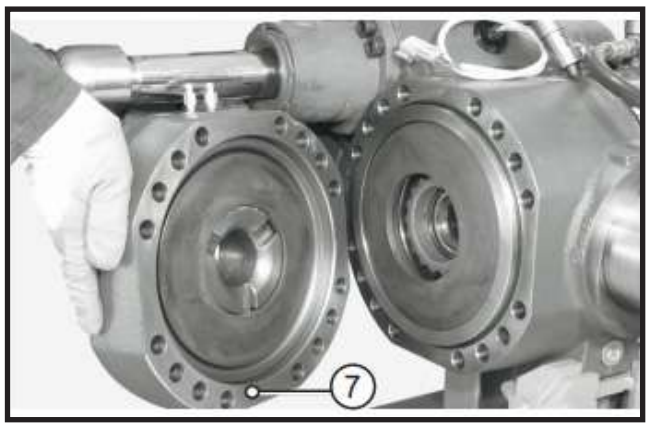

FIGURE 9: Move the cover (**7**) outwards.

FIGURE 10: Remove the Belleville washers (**2**) and write down direction of assembly.

FIGURE 11: Slowly introduce low-pressure compressed air through the connection member for the service brake, in order to extract the piston (**10**).

CAUTION

Hold the piston (**10**) back, as it may be suddenly ejected and damaged.

FIGURE 12: Write down their order of assembly and mark and remove negative piston sign the position.

FIGURE 13: Slowly introduce low-pressure compressed air through the connection member for the negative brake, in order to extract the piston (**3**).

CAUTION

Set the pliers following the correct procedure shown in END-STOP PLIER SETTING.

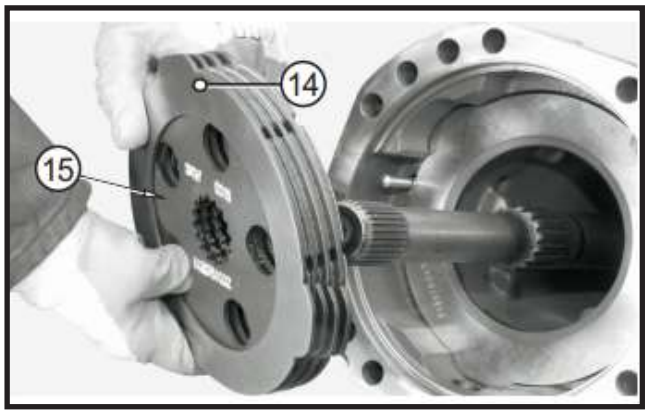

FIGURE 14: Remove brake discs (**14, 15**), writing down direction of assembly.

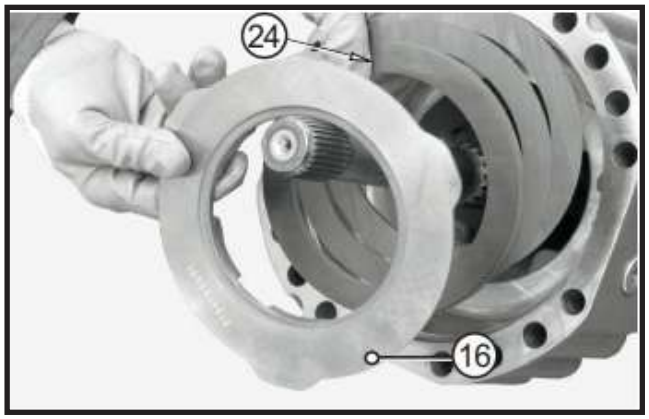

FIGURE 15: Remove braking discs (16) and shims (24), writing down direction of assembly.

Assembly

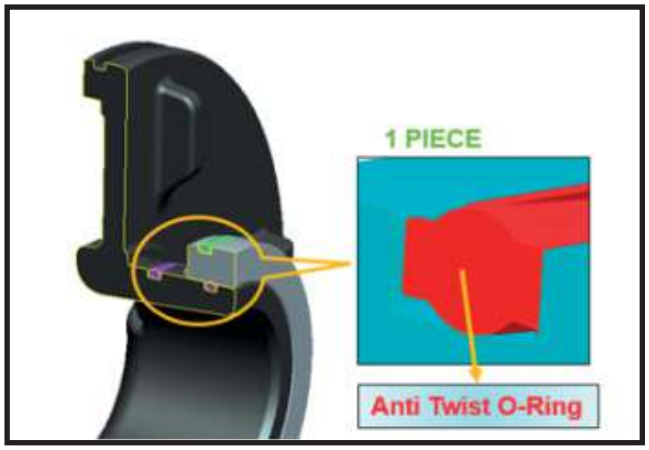

FIGURE 16: Fit antitwist rings (**4, 5, 27**) onto the piston (**3**). Lubricate the piston and the antitwist rings and install the unit into the cylinder (**7**).

WARNING

Antitwist ring replaces o-ring + backup ring solution. For details, see PSB-0395.

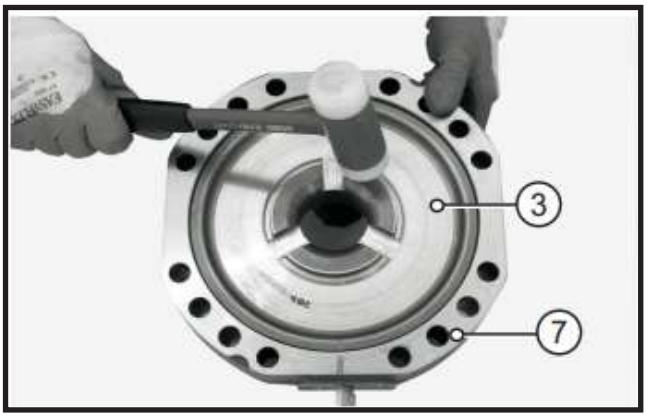

FIGURE 17: Using a plastic hammer, insert the piston (**3**) into the cylinder (**7**).

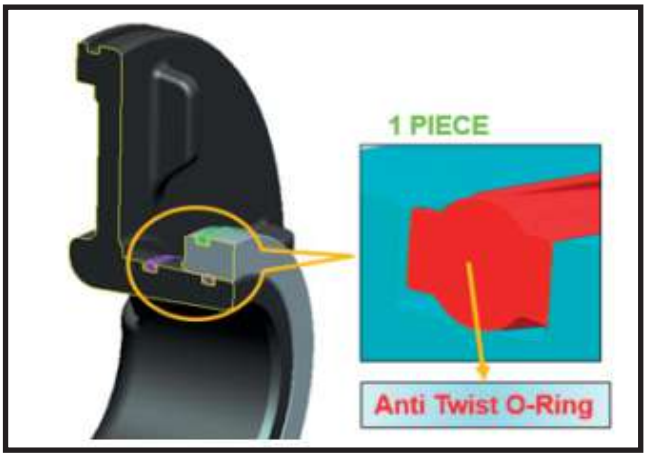

FIGURE 18: Fit antitwist rings (**8**) onto the piston (**10**). Lubricate the piston and the antitwist rings and install the unit into the cylinder (**7**).

WARNING

Antitwist ring replaces o-ring + backup ring solution. For details, see PSB-0395.

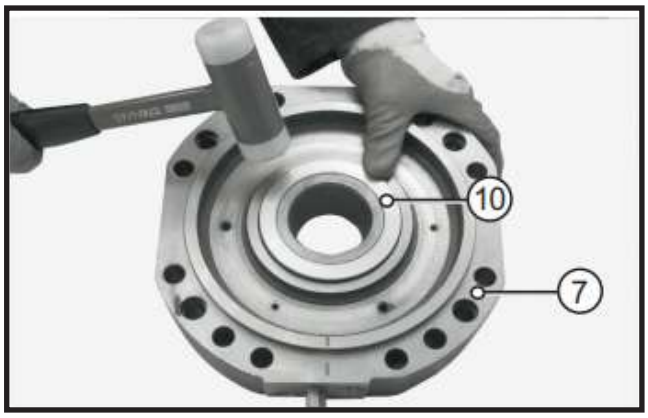

FIGURE 19: Using a plastic hammer, insert the piston (**10**) into the cylinder (**7**).

FIGURE 20: Apply grease and position the Belleville washers (**2**) and engage the cylinder (**7**).

FIGURE 21: Apply grease and position the Belleville washers (**2**) and engage the cylinder (**1**).

FIGURE 22: Check quality and position of the cylinder's o-ring.

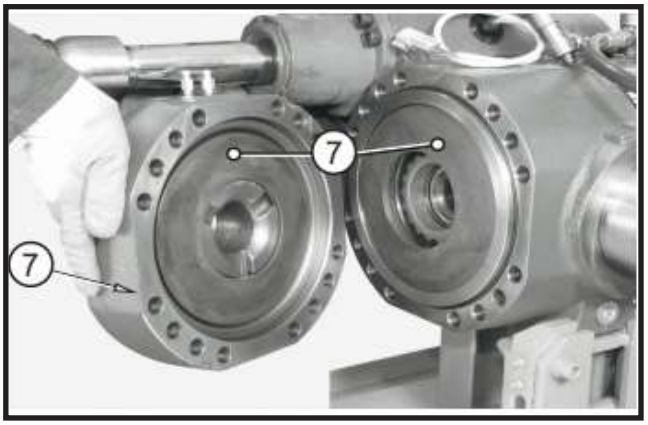

FIGURE 23: Position the Belleville washers (**2**) and engage the cylinder (**7**).

FIGURE 24: Lock the cylinder.

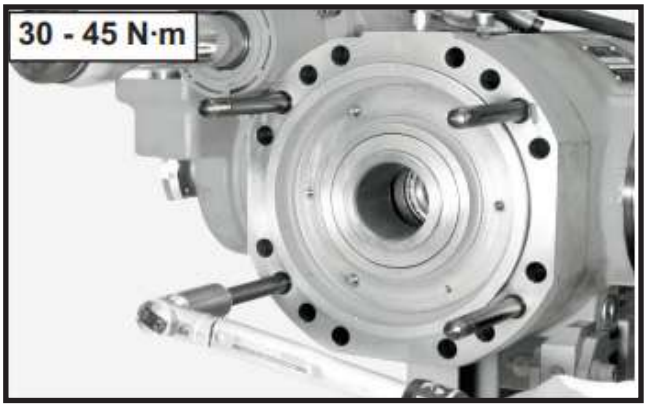

FIGURE 25: Tightening the studs with a torque wrench set to a torque of 22-33 ft-lb (30 - 45 N·m).

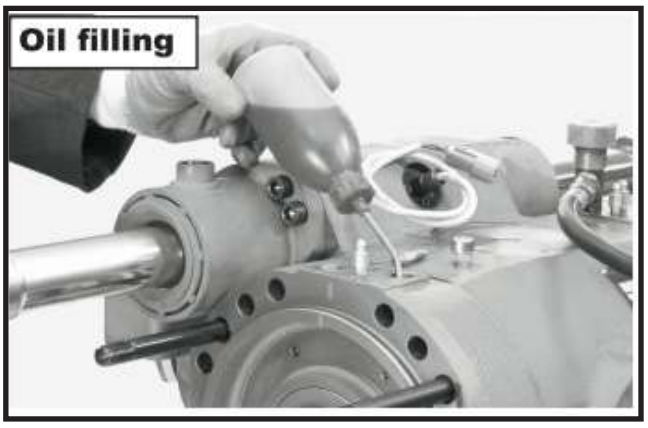

FIGURE 26: Fill with ATF oil. For details see MAINTENANCE INTERVALS.

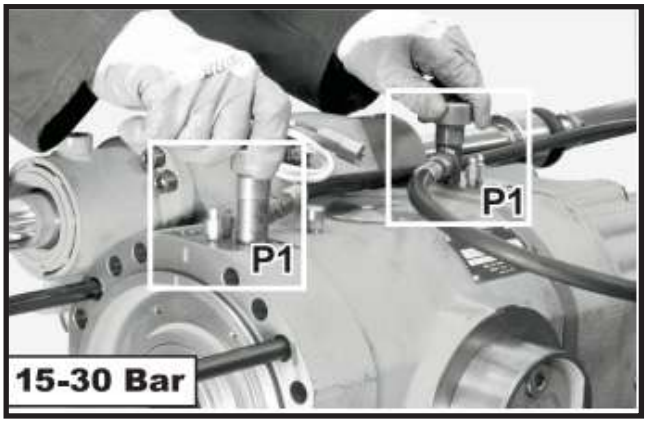

FIGURE 27: Connect an external pump to the negative brake and introduce pressure to 217.5-435 psi (15 - 30 bar).

WARNING

Always check that the hydraulic circuit test for leaks under pressure. Always use a cardboard or a panel to control the loss.

A leak from a hole of the size of a pin can cause serious injury. If fluid is injected into the skin it is necessary to seek immediate medical care.

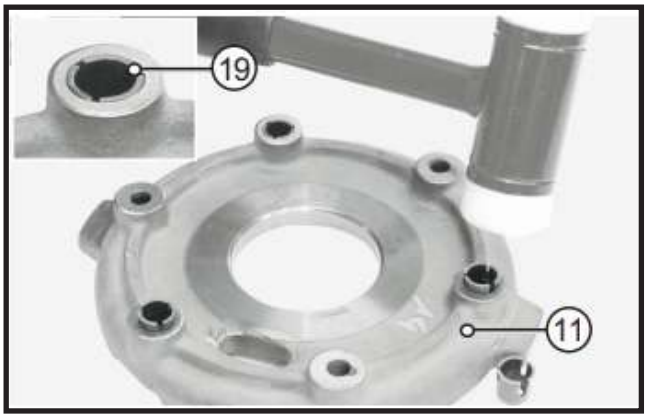

FIGURE 28: Insert the stroke automatic regulation springs (**19**); place them in line with the piston (**11**).

FIGURE 29: Insert the intermediate disk (**11**).

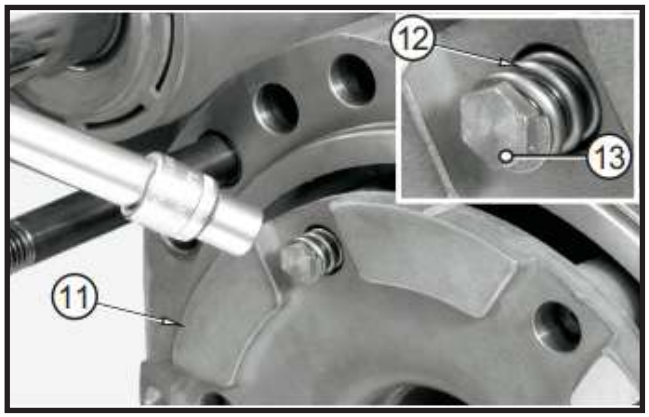

FIGURE 30: Fit the reversal springs (**12**, **13**) on the piston (**11**).

FIGURE 31: Apply Loctite 270 to the thread of the pistion adjustment nut. Tighten with torque wrench setting of 10 - 15 N·

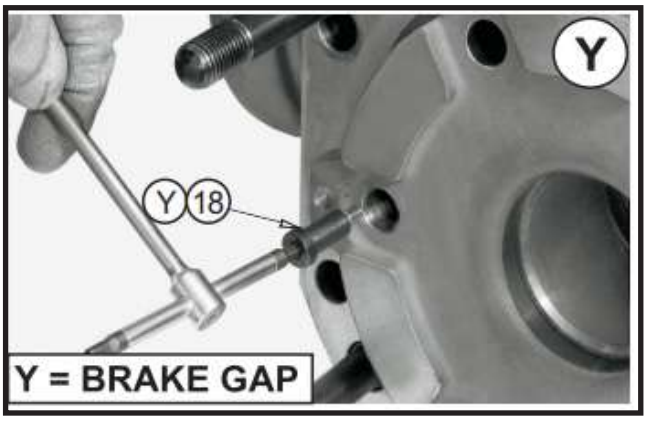

FIGURE 32: Y = brake gap

0,03 in (0,75mm)

0,04 in (1,00mm)

0,05 in (1,25mm)

0,06 in (1,50mm)

Depending on axle configuration.

FIGURE 33: Fit the pin screws making sure that they are all of the same color. Apply Loctite 270 to the thread. Torque wrench setting: 4-5 ft-lb (5 - 7 N·m).

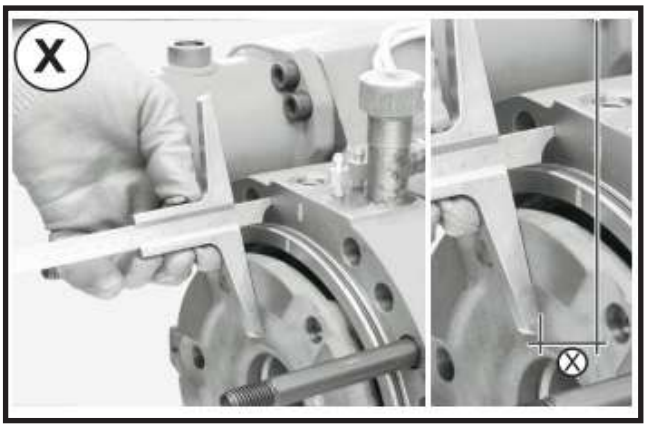

FIGURE 34: Take the measurement from the surface of the intermediate disk to the cover sealing surface with 435 psi (30 bar) of pressure introduced.

EXAMPLE: 1 in (25.4 mm)

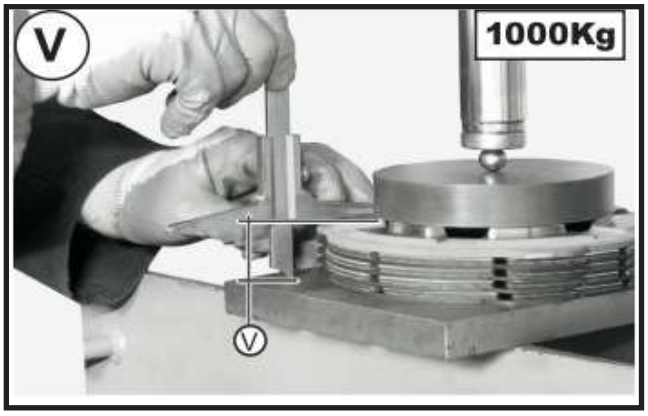

FIGURE 35: Put the brake disc pack including the shim under a press, load with 1000 kg / 2204 lb. and take the measure “V”. EXAMPLE: V = (40 mm) / 1.6 In.

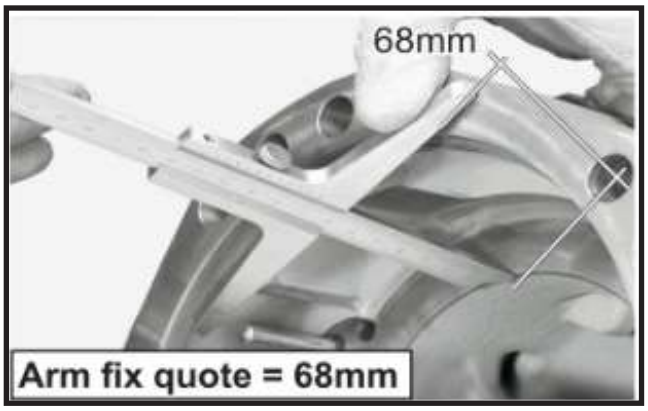

FIGURE 36: Arm fix quote = 68 mm / 2.7 in.

FIGURE 37: S = 2,7 in (68 mm) - (x + y + v) = Thickness of shims to insert under the shim washer.

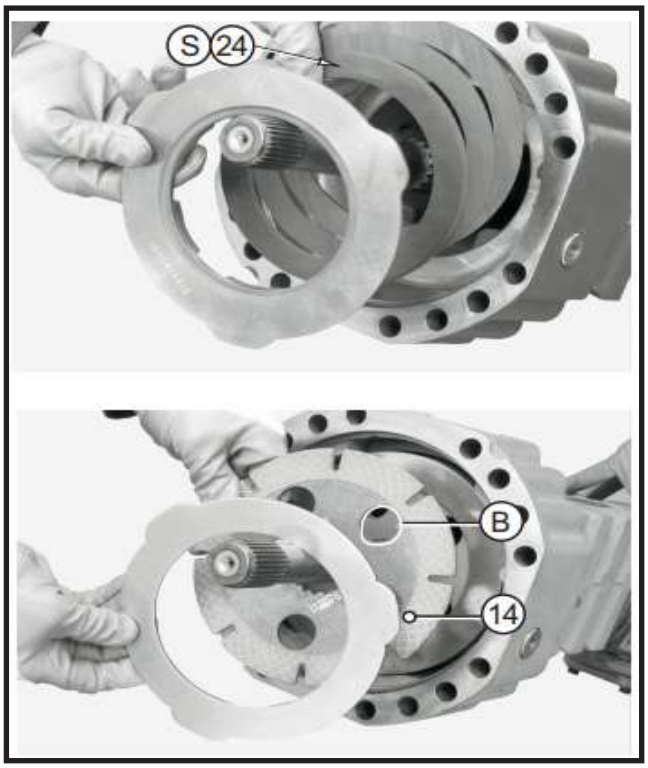

FIGURE 38: Slightly lubricate the braking disks (**14**) and fit them in the arm following the correct sequence; orient them so that the oil circulation holes and the marks “B” are lined up.

When installing the steel discs, the slot corresponding to the oil level cap should always be kept free.

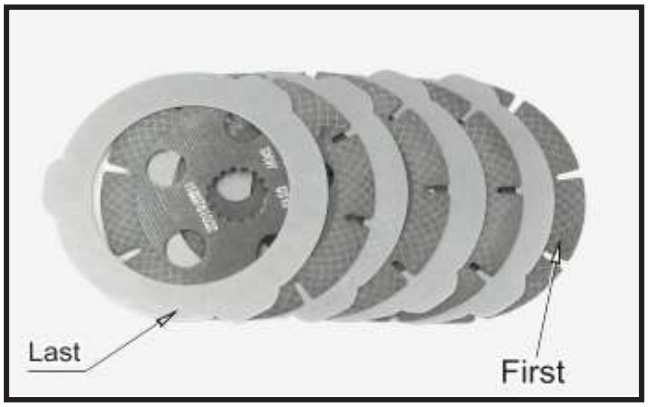

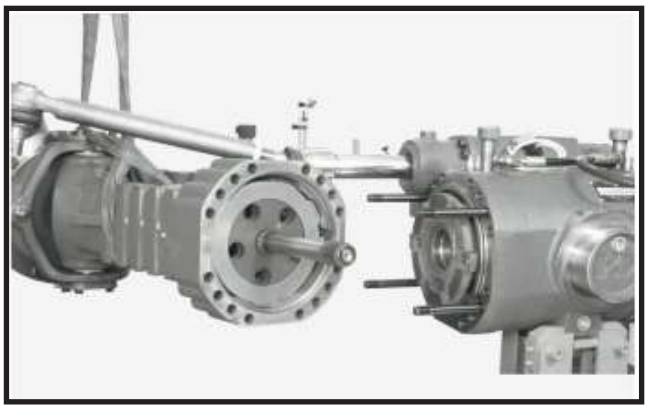

FIGURE 39: Check integrity and position of the arm’s o-ring; install the complete arm.

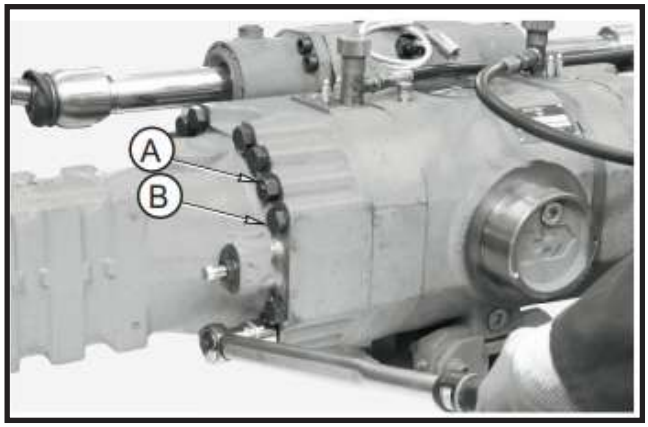

FIGURE 40: Torque wrench setting:

A = 147 ft-lb (200 N·m)

B = 209 ft-lb (283 N·m)

FIGURE 41: Gradually release the pressure in the braking circuit, bringing it to zero through the external pump.

WARNING

Do not remove any part of the hydraulic circuit without having completely released the hydraulic pressure. The removal of pressurized parts or loss caused from releasing these components can cause serious injuries and even death. A leak from a hole of the size of a pin can cause serious injury. If fluid is injected into the skin it is necessary to seek immediate medical car.

FIGURE 42: Gradually loosen the sleeve and remove.

WARNING

Carefully check that the hydraulic pressure is discharged completely before removing the external pump sleeve connected to the brake

INCORPORATED REDUCTION GEAR AND PINION 602 & 603

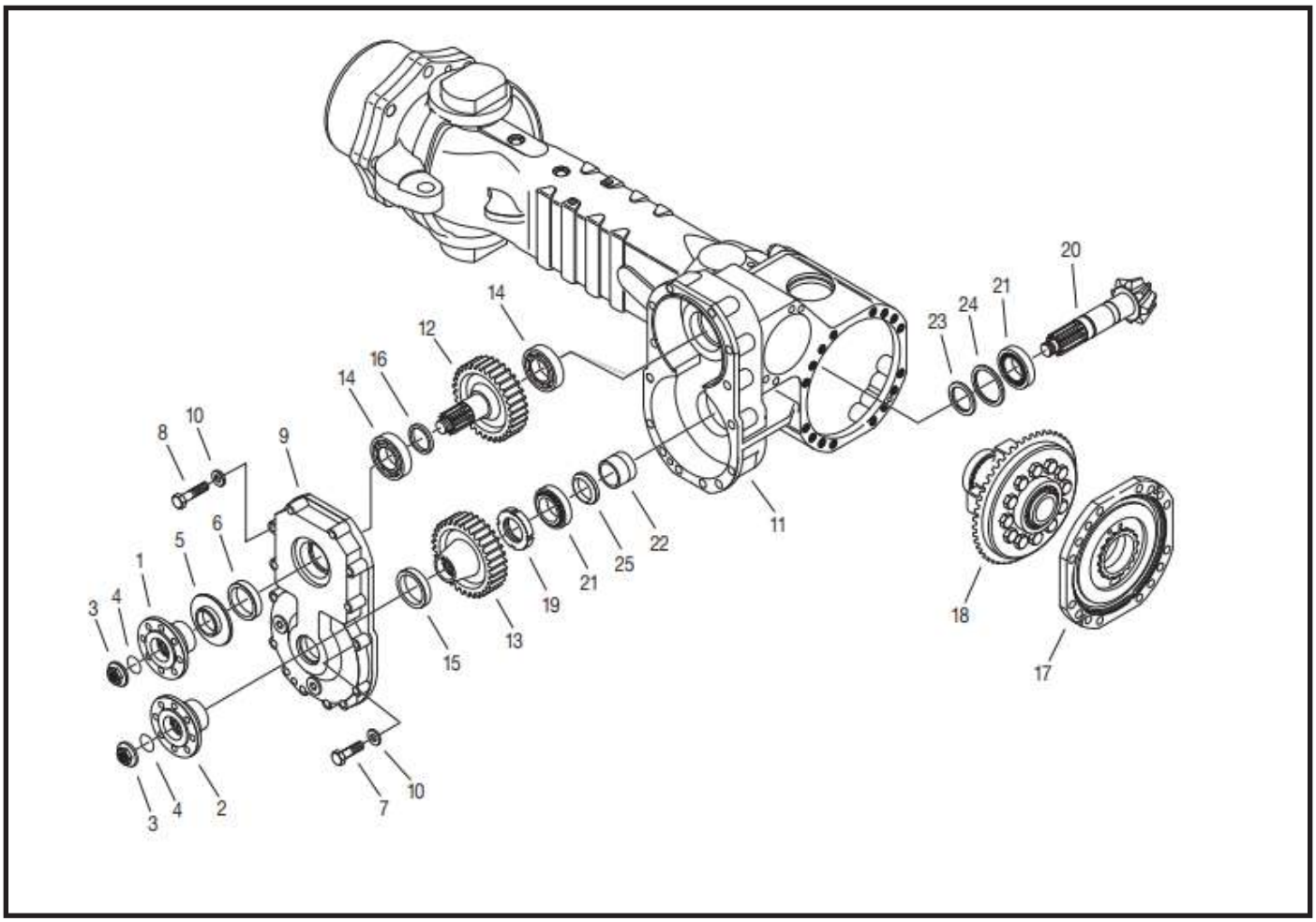

Disassembly

CAUTION

Before draining oil, release the internal pressure.

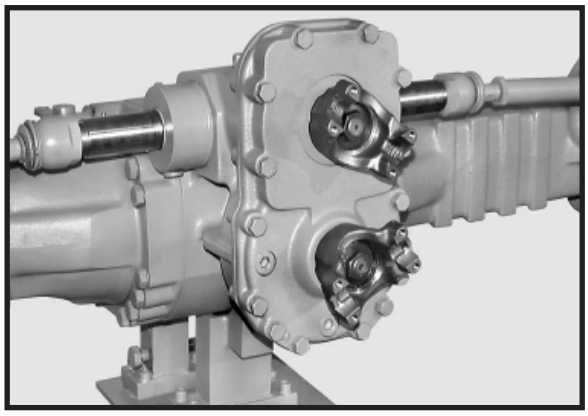

FIGURE 1: The figure shows the axle with incorporated reduction gear with Mechanic flanges; disassembly and assembly procedures also apply to DIN flanges.

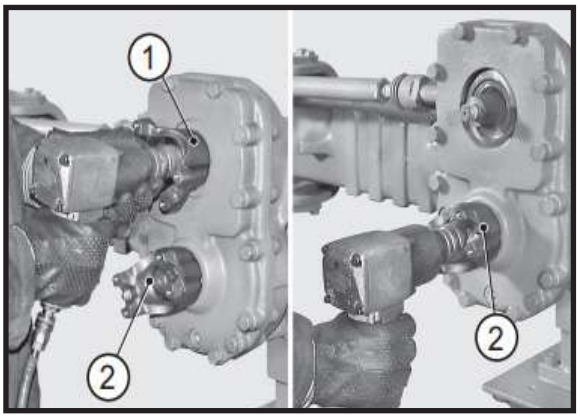

FIGURE 2: Loosen the check nuts on upper (**1**) and lower (**2**) flange.

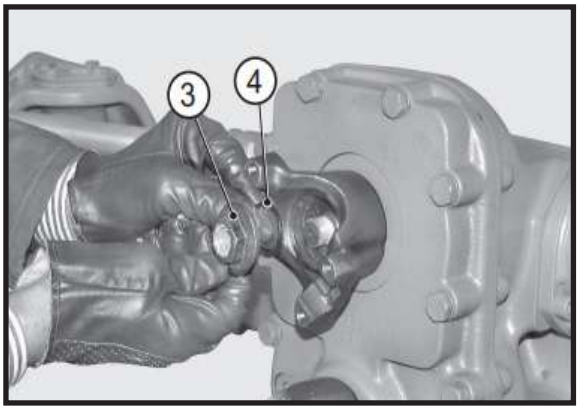

FIGURE 3: Draw out nuts (**3**) and o-rings (**4**).

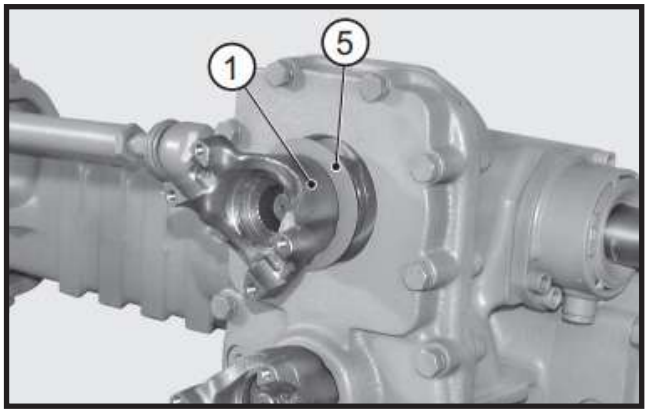

FIGURE 4: Remove the upper flange (**1**) together with dust ring (**5**).

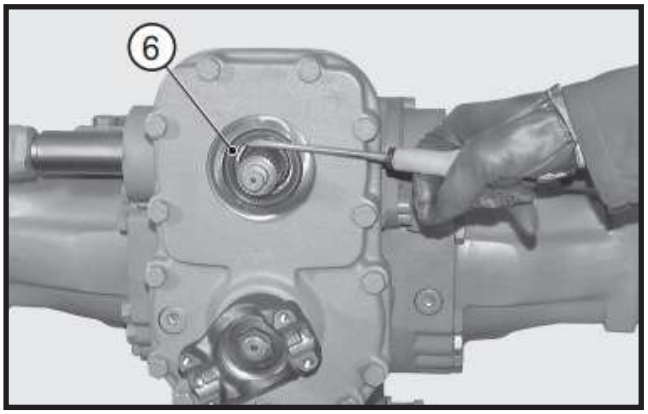

FIGURE 5: Remove the snap ring (**6**) and discard it.

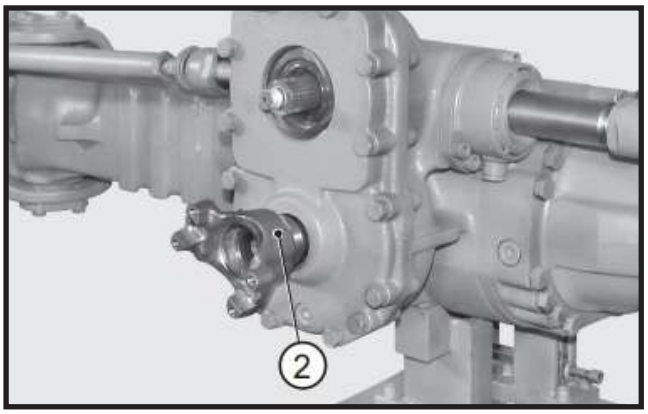

FIGURE 6: Remove the lower flange (**2**).

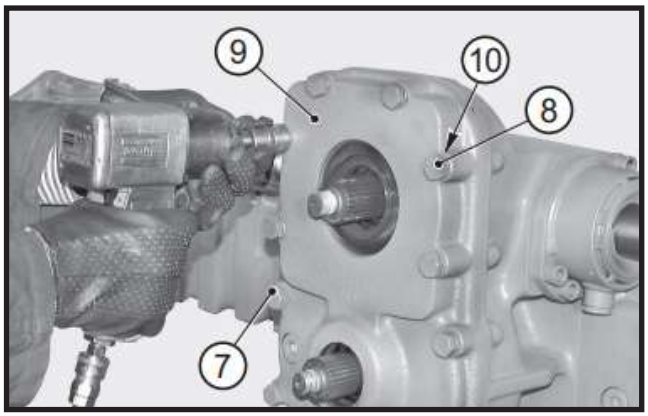

FIGURE 7: Remove check screws (**7**), (**8**) and relative washers (**10**) from cover (**9**).

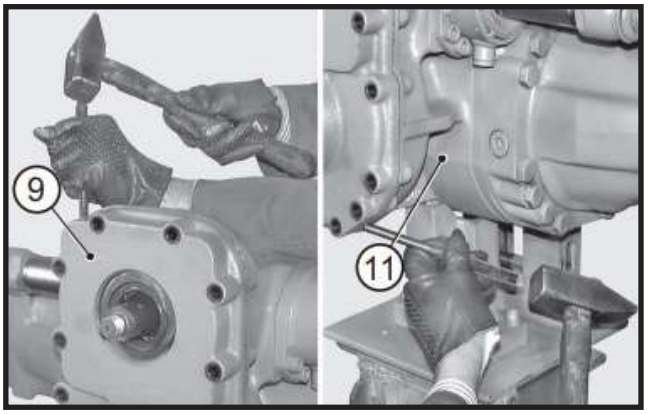

FIGURE 8: In turn, insert a punch in the slots provided and, tapping lightly with a hammer, separate the cover (**9**) from the body of the reduction gear (**11**).

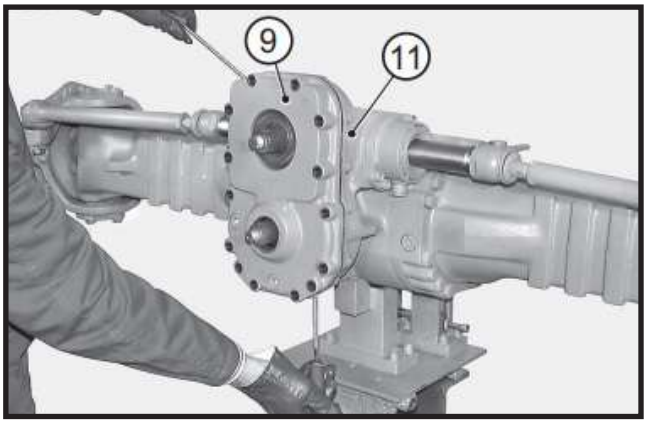

FIGURE 9: Insert two levers in the provided slots and move the cover (**9**) away from the body of the reduction gear (**11**).

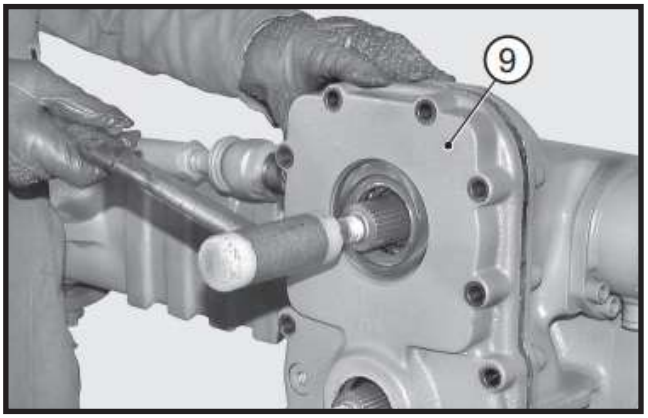

FIGURE 10: Lightly tap with a hammer to disengage cover (**9**) from upper gear (**12**).

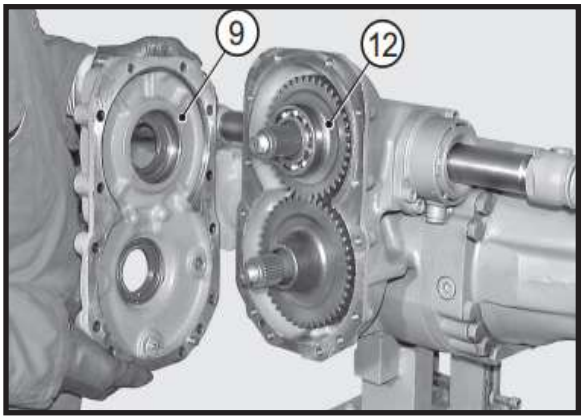

FIGURE 11: Draw out cover (**9**) and remove any sealant left.

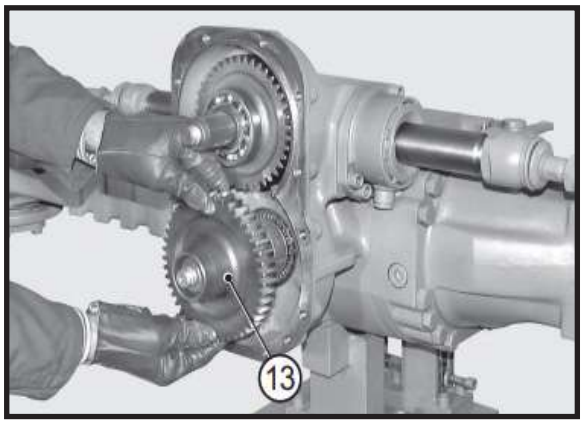

FIGURE 12: Remove lower gear (**13**).

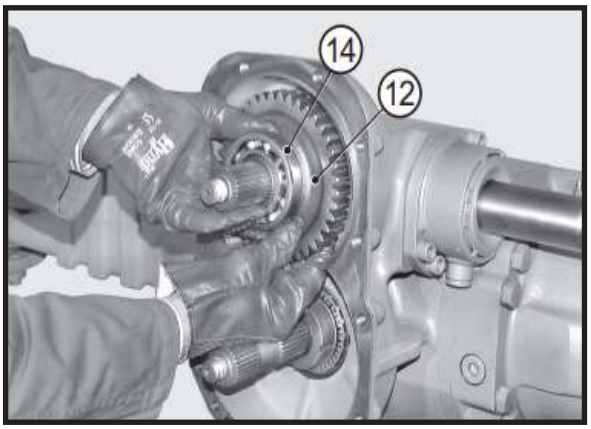

FIGURE 13: Remove upper gear assembly (**12**) complete with bearings (**14**).

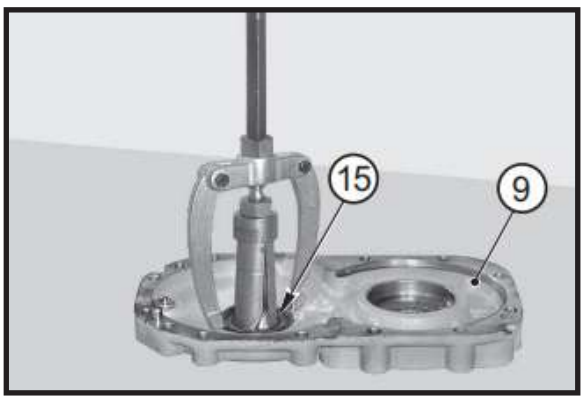

FIGURE 14: Using a puller, remove snap ring (**15**) from cover (**9**) and discard it.

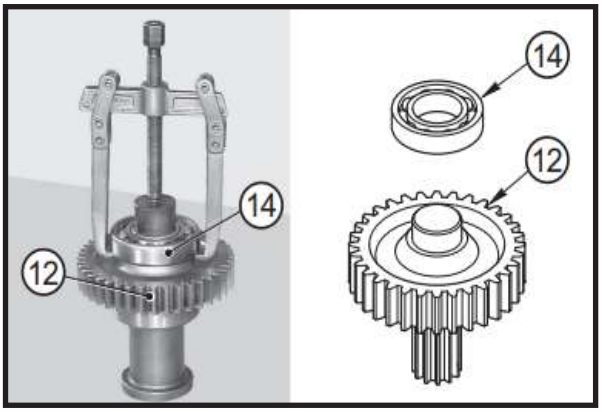

FIGURE 15: Remove inner bearing (**14**) from gear assembly (**12**).

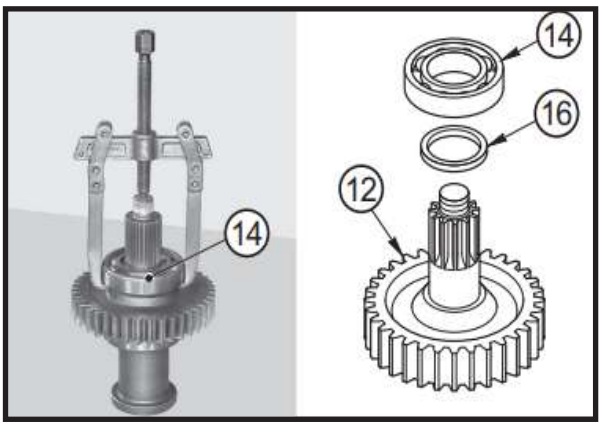

FIGURE 16: Remove outer bearing (**14**) and spacer (**16**).

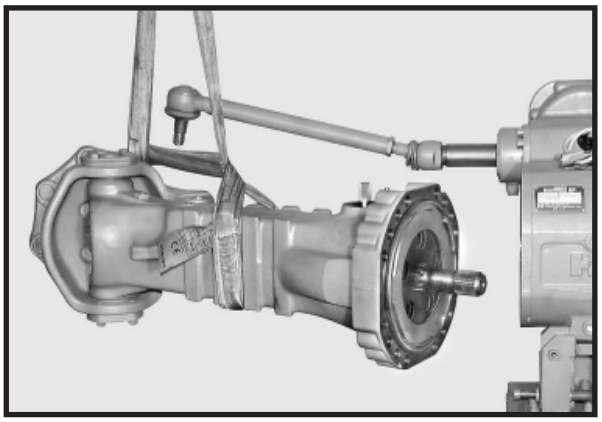

FIGURE 17: Disjoin from the steering knuckle the tie rod located by the side of the intermediate cover (**17**). Remove the complete arm. *For details, see CHECKING WEAR AND REPLACING THE BRAKING DISCS.*

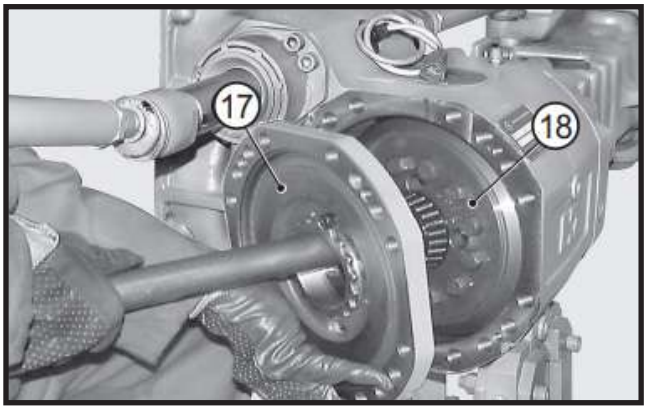

FIGURE 18: Remove the intermediate cover (**17**) and the whole differential unit (**18**). *For details, see DIFFERENTIAL UNIT.*

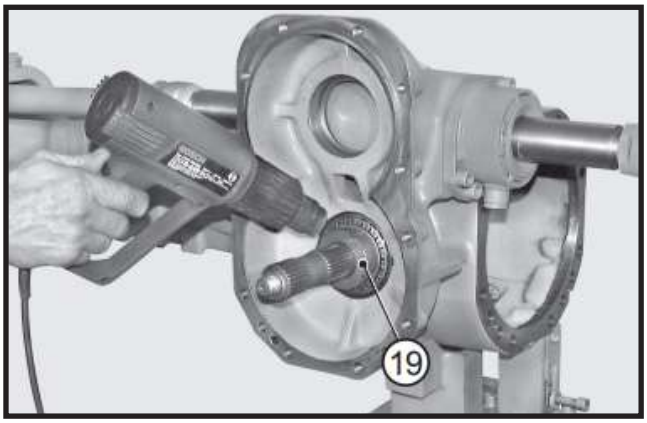

FIGURE 19: Heat the ring nut (**19**) at approx. 176 °F (80 °C).

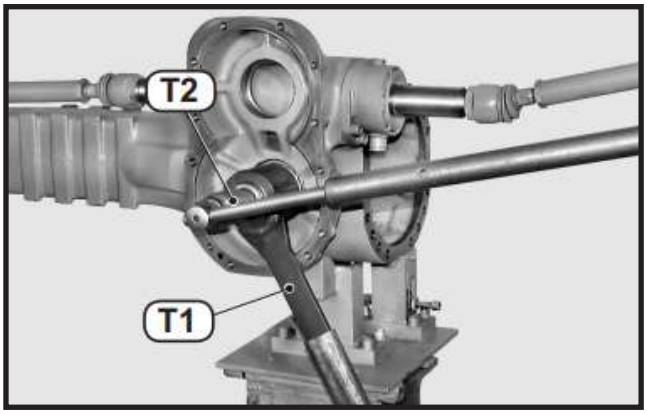

FIGURE 20: Engage special wrench T1 (See drawing T1) on the ring nut (**19**) and apply barhold T2 (See drawing T2) on the pinion (**20**).

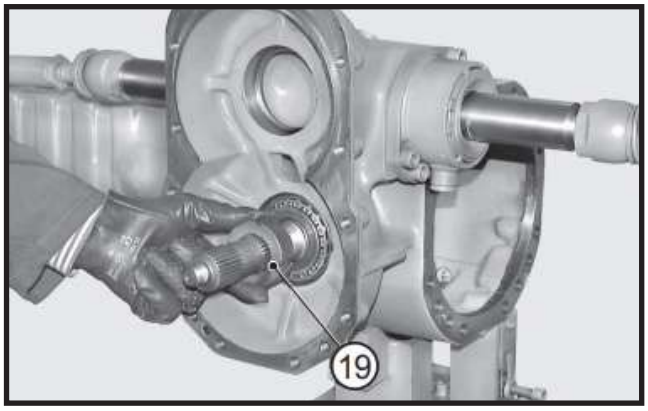

FIGURE 21: Remove ring nut (**19**).

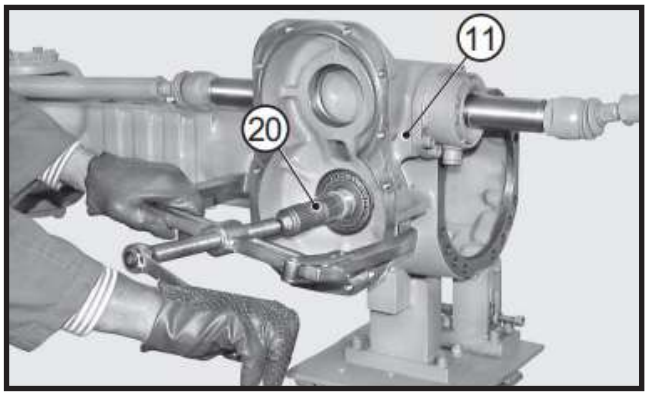

FIGURE 22: Using a puller, extract pinion (**20**) complete with inner bearing (**21**), spacer (**22**) and distance washers.

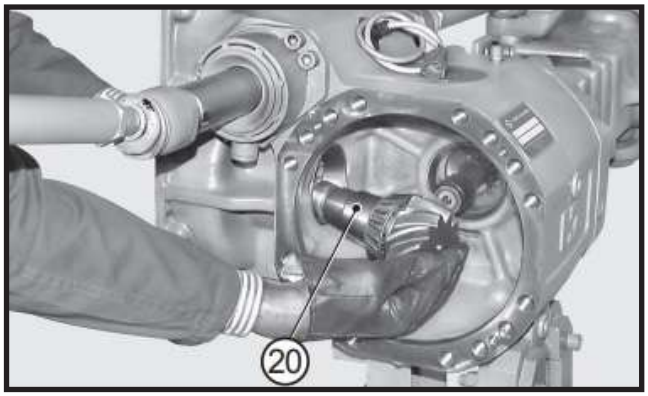

FIGURE 23: Remove the complete pinion (**20**).

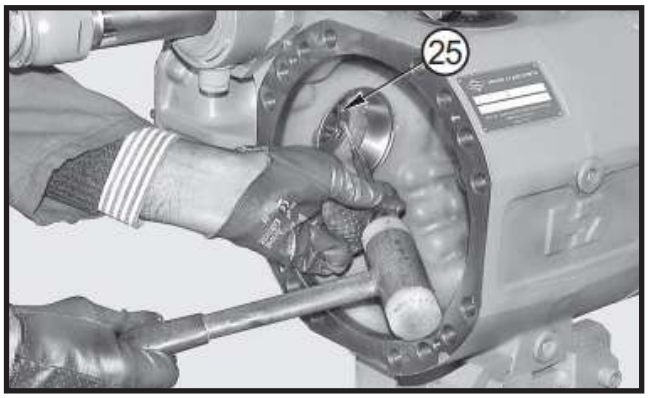

FIGURE 24: Using a punch and a hammer, extract the snap ring (**25**).

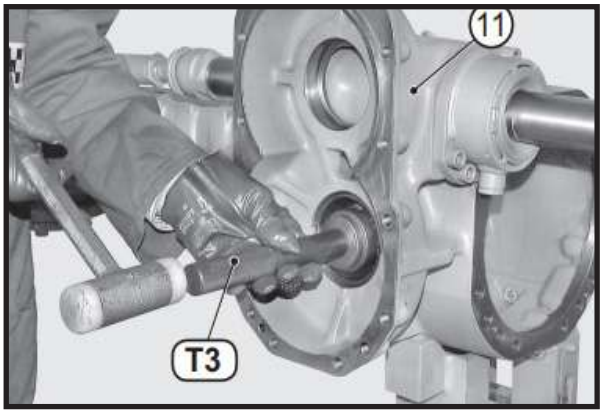

FIGURE 25: Find the value of the distance washers (**23**) and (**24**) and insert the thrust blocks of the conical bearing of the pinion into the body of the reduction gear (**11**). Using tool T3 (See drawing T3) insert the snap ring (**25**) previously lubricated with grease.

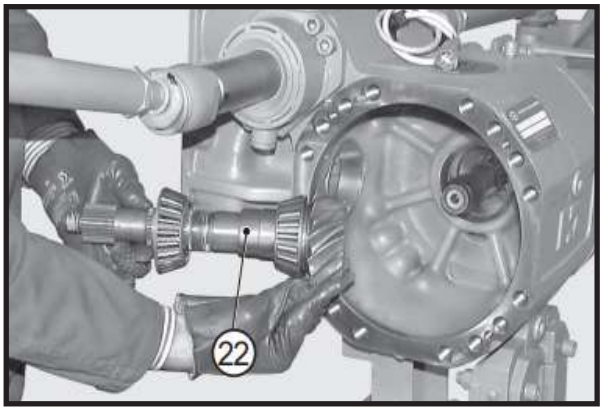

FIGURE 26: Assemble the pinion assembly as shown in the picture, checking that spacer (**22**) is correctly oriented.

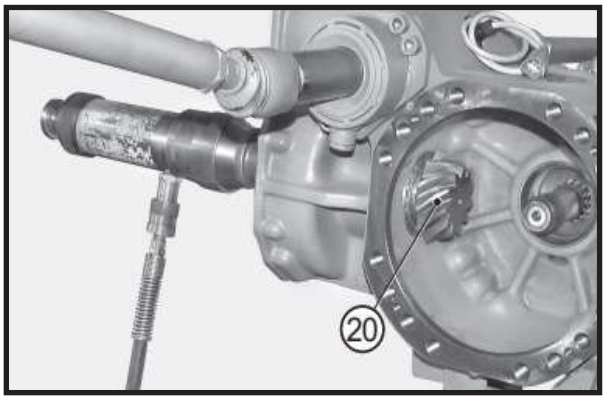

FIGURE 27: With tools T4C (See drawing T4), T4D (See drawing T4) and T4B (See drawing T4) connected to a press, insert the complete pinion assembly (**20**).

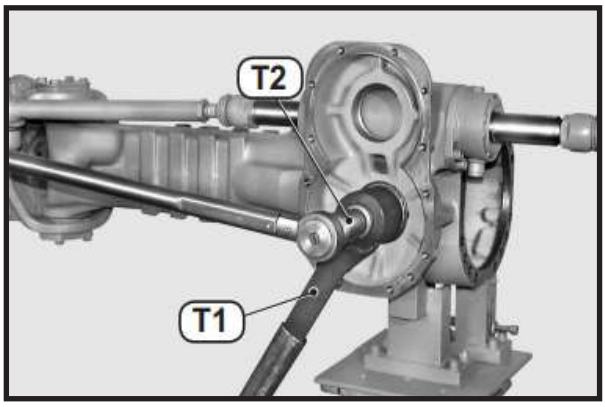

FIGURE 28: Apply Loctite 242 to the thread of the pinion and screw the ring nut (**19**). Engage special wrench T1 (See drawing T1) on the ring nut and apply bar-hold T2 (See drawing T2) to the pinion (**20**). Tighten the ring nut (**19**) following the appropriate procedure and check that torque is 170 - 220 N·cm.

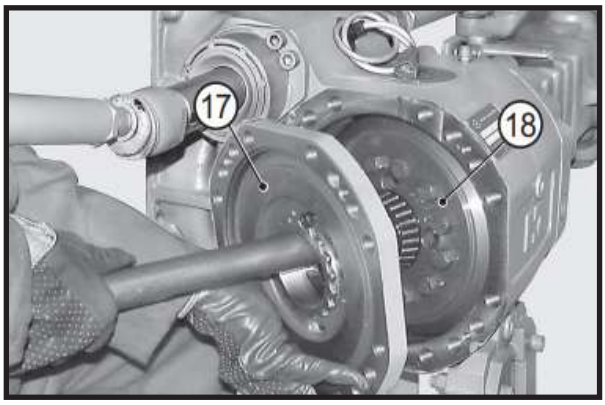

FIGURE 29: Re-install the differential unit (**18**) and the intermediate cover (**17**).

i	CAUTION
If the ring gear ha been replaced, reinstate clearances. For details, see DIFFERENTIAL UNIT.	

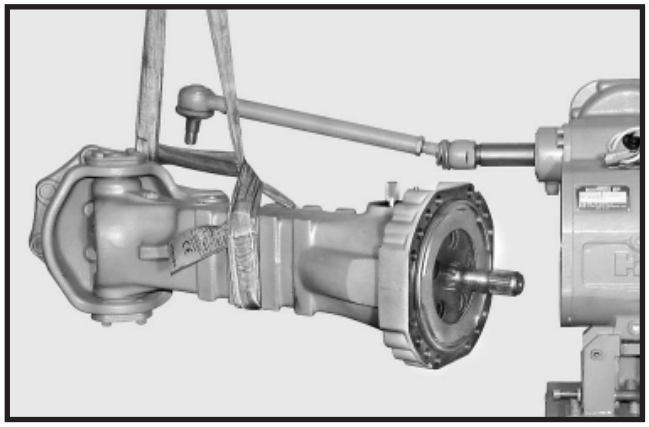

FIGURE 30: Re-install the complete arm checking flatness and blocking the arm by keeping to the appropriate procedures illustrated in section CHECKING WEAR AND REPLACING THE BRAKING DISCS. Also connect the tie rod.

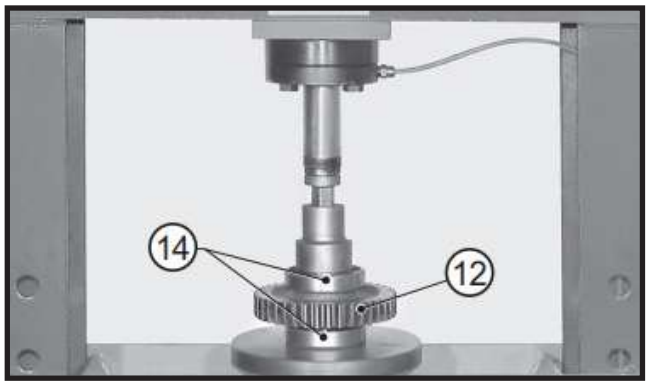

FIGURE 31: Using a press, fit the bearings (**14**) and the spacer (**16**) on the upper gear (**12**).

i	CAUTION
The distance piece (**16**) must be positioned between the outer bearing and the gear.	

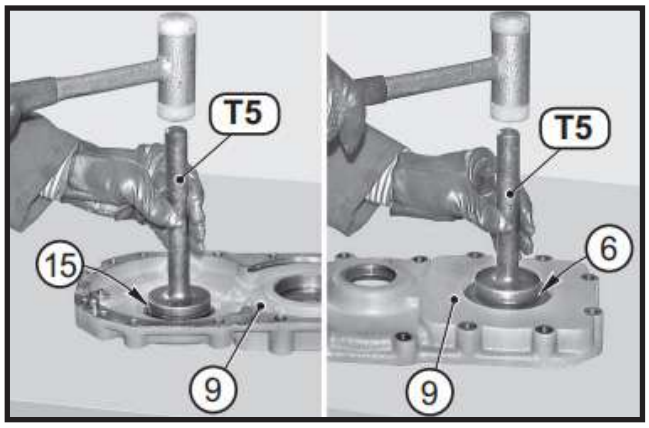

FIGURE 32: Grease snap rings (**15**) and (**6**); position the snap rings in the cover (**9**) using tool T5 (See drawing T5).

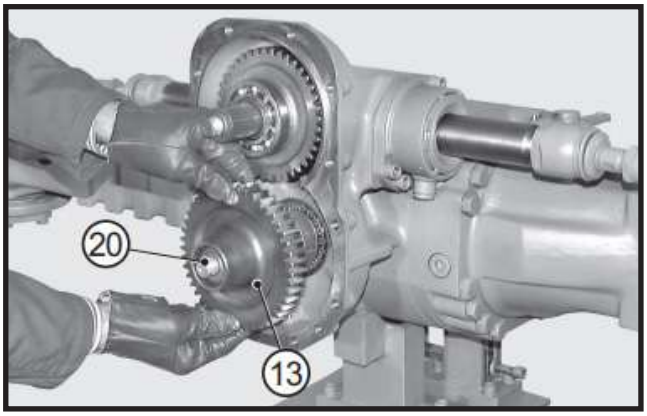

FIGURE 33: Fit the lower gear (**13**) onto the pinion (**20**).

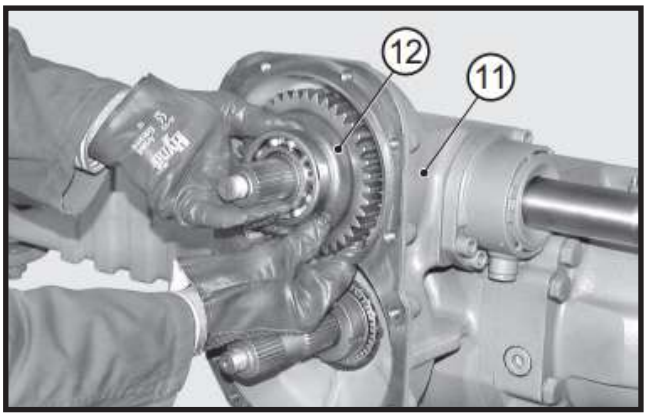

FIGURE 34: Insert the upper gear unit (**12**) into the body of the reduction gear (**11**).

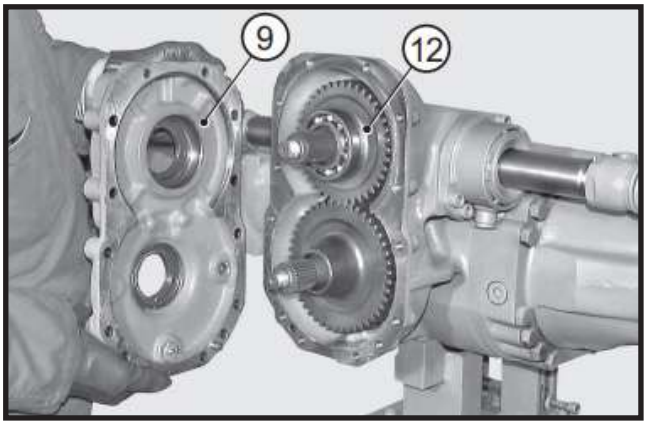

FIGURE 35: Apply Loctite 510 to the locking surface of the body of the reduction gear (**11**). Lubricate snap rings (**6**) and (**15**); fit cover (**9**) and set cover (if necessary) by lightly tapping with a plastic hammer.

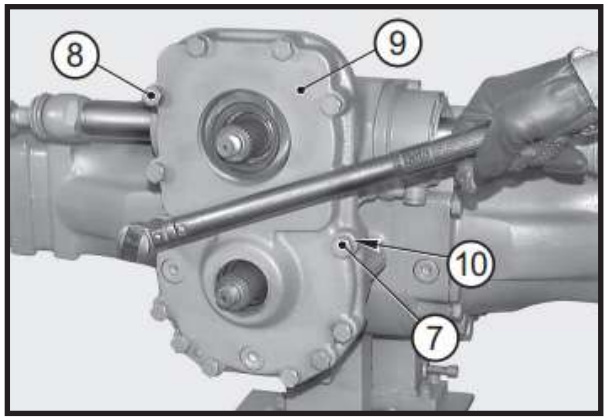

FIGURE 36: Block cover (**9**) with screws (**7**) and (**8**) and relative washers (**10**). Tighten using the criss-cross method. Torque wrench setting: 60-67 ft-lb (82 - 91 N·m).

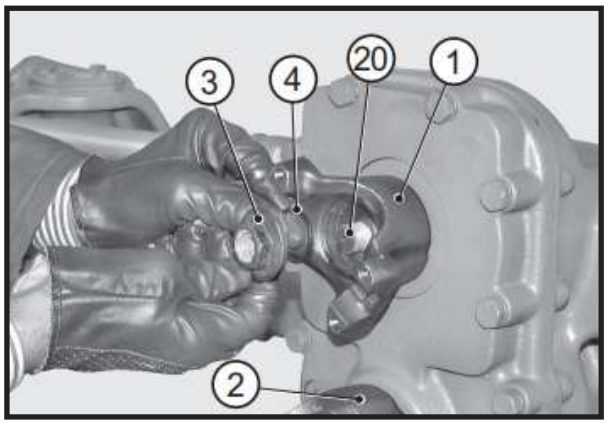

FIGURE 37: Fit the upper (**1**) and lower (**2**) flanges. Apply Loctite 242 to the threaded portion of pinion (20) and upper gear (**12**). Fit o-rings (**4**) and nuts (**3**).

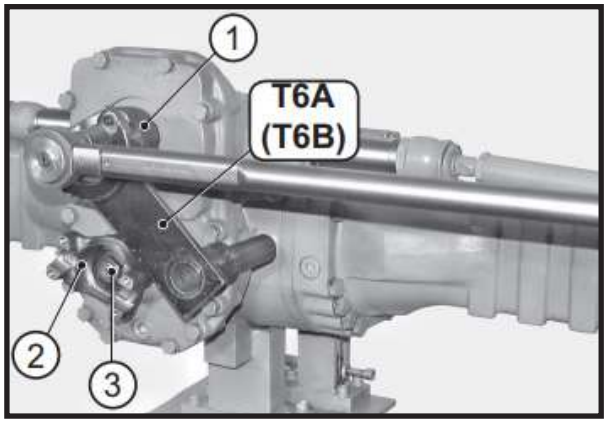

FIGURE 38: Apply tool T6 (See drawing T6) to flanges (**1**) and (**2**) and tighten nuts (**3**) using a torque wrench. Torque wrench setting: 206-229 ft-lb (280 - 310 N·m).

SPECIAL TOOLS

T1

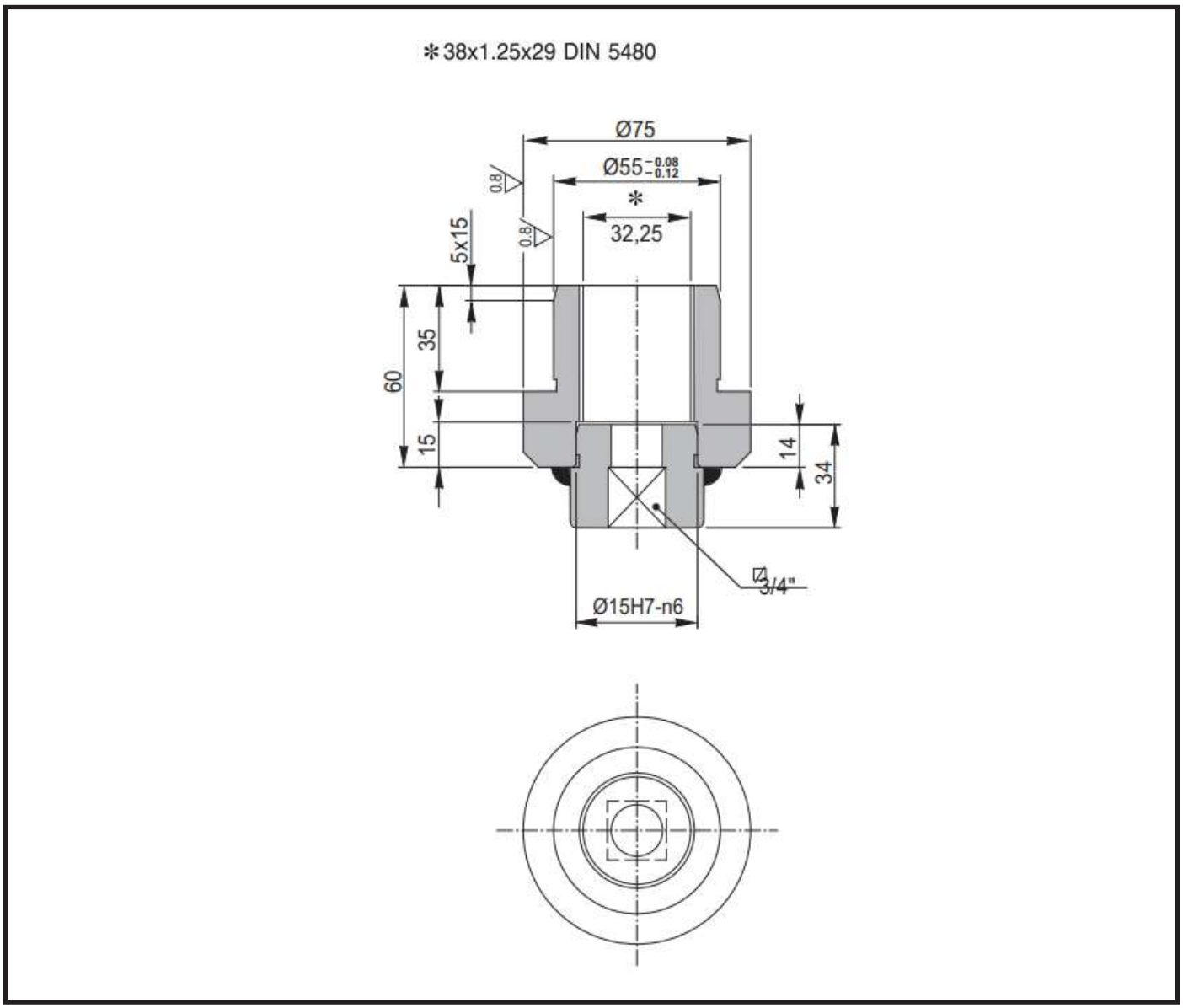

T2

T2A

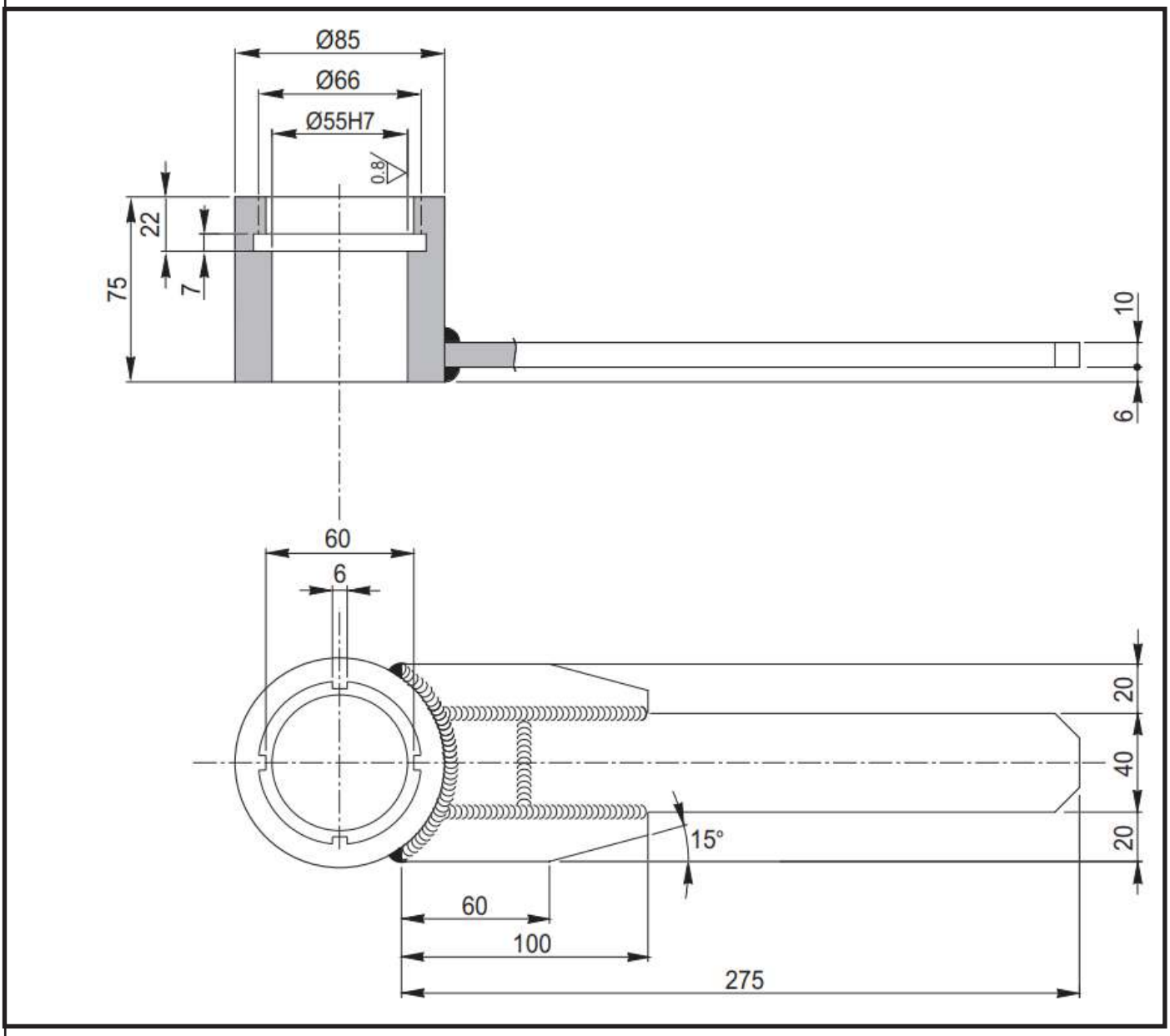

T2B

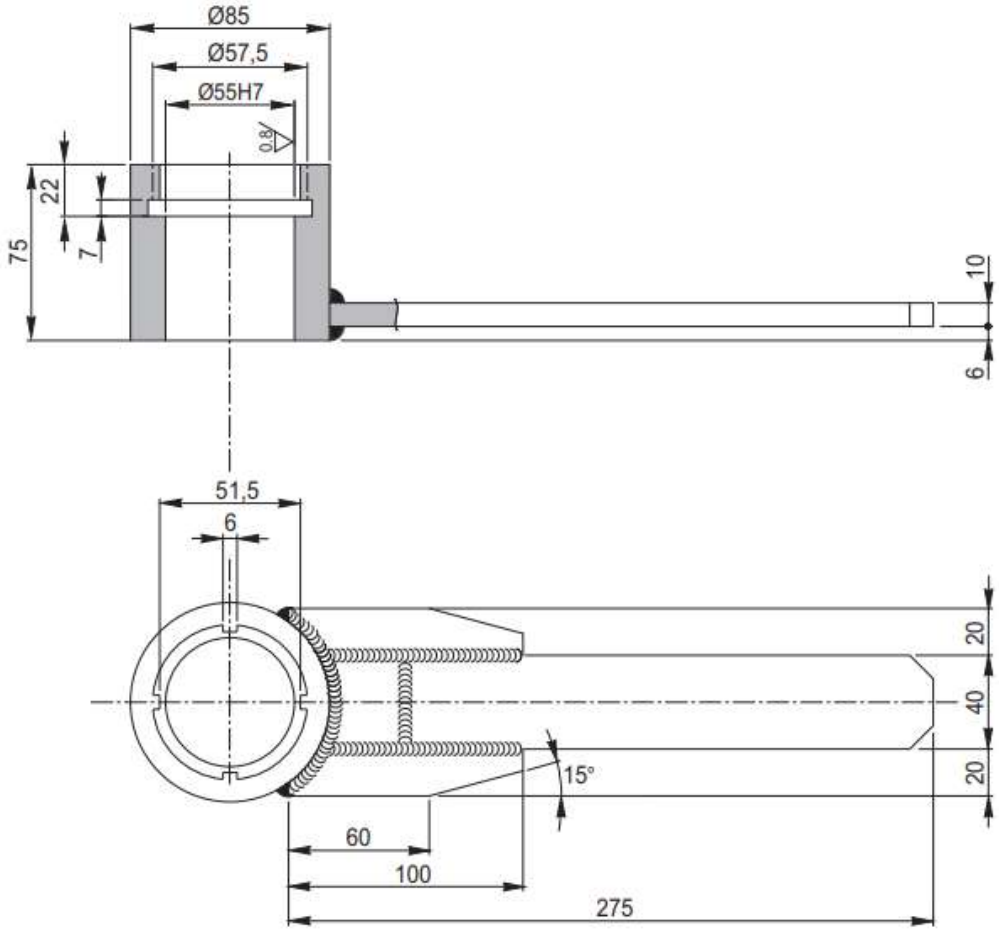

T3

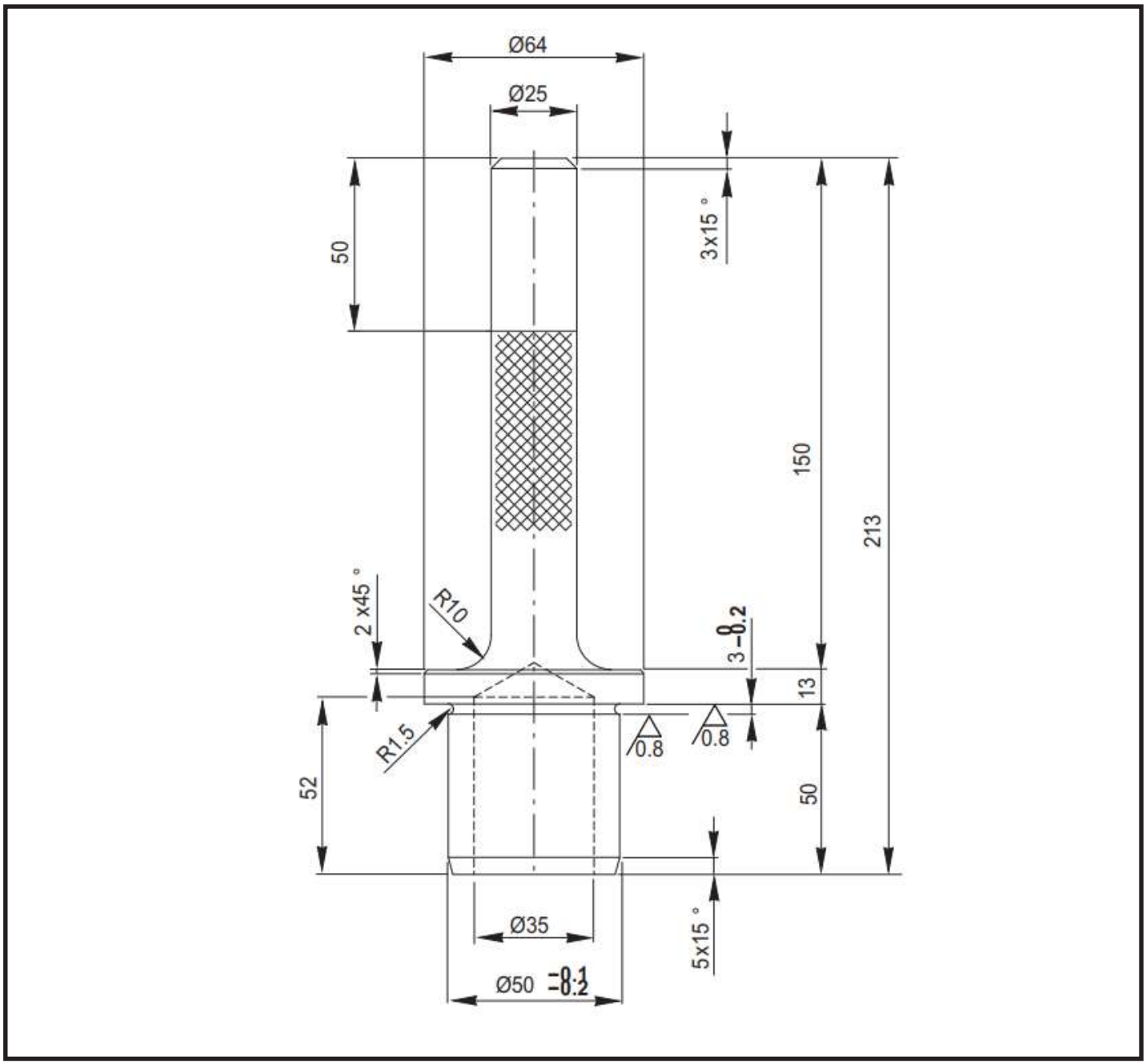
Ø64
Ø25
50
3x15 °
150
213
2 x45 °
R10
3 -0.2
13
R1.5
0.8
0.8
52
50
Ø35
5x15 °
Ø50 -0.1 -0.2

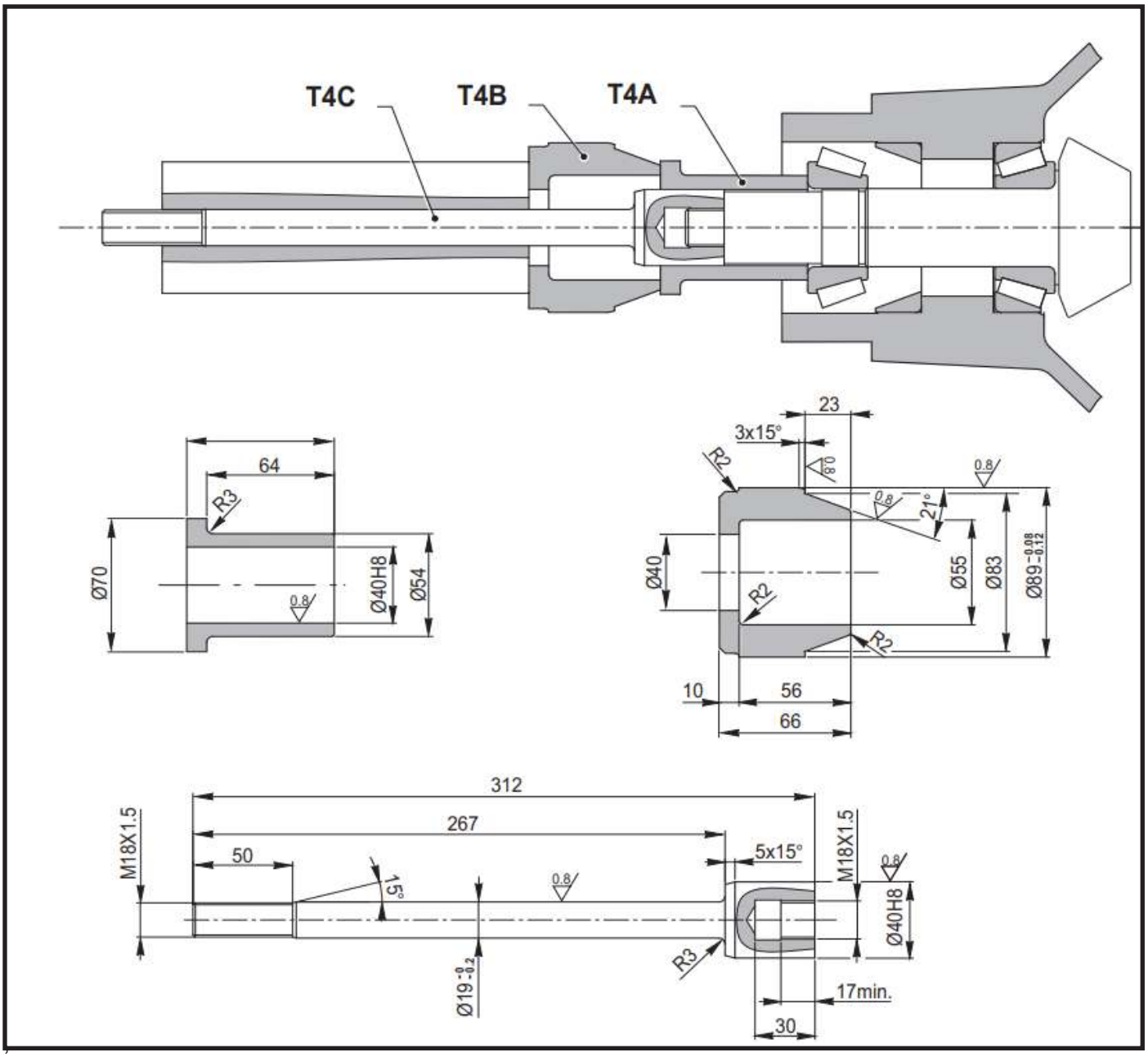
T4C
T4B
T4A
64
R3
Ø70
0.8
Ø40H8
Ø54
23
3x15°
R2
0.8
0.8
21°
Ø40
R2
Ø55
Ø83
Ø89-0.08 -0.12
R2
10
56
66
312
267
50
5x15°
M18X1.5
M18X1.5
0.8
Ø40H8
15°
0.8
R3
Ø19-0.2
17min.
30

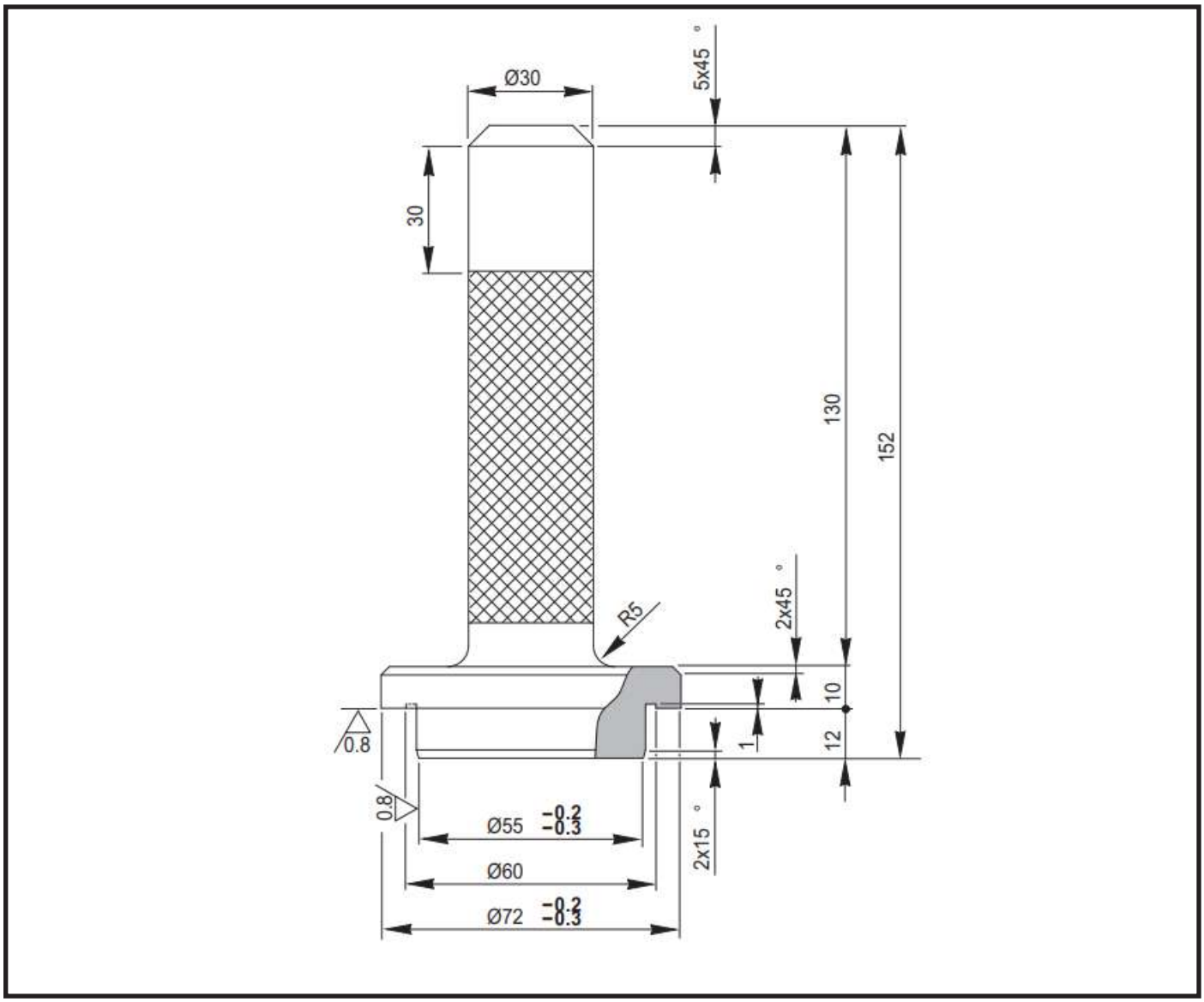
Ø30
5x45 °
30
130
152
2x45 °
R5
10
12
1
0.8
0.8
Ø55 -0.2 -0.3
Ø60
Ø72 -0.2 -0.3
2x15 °

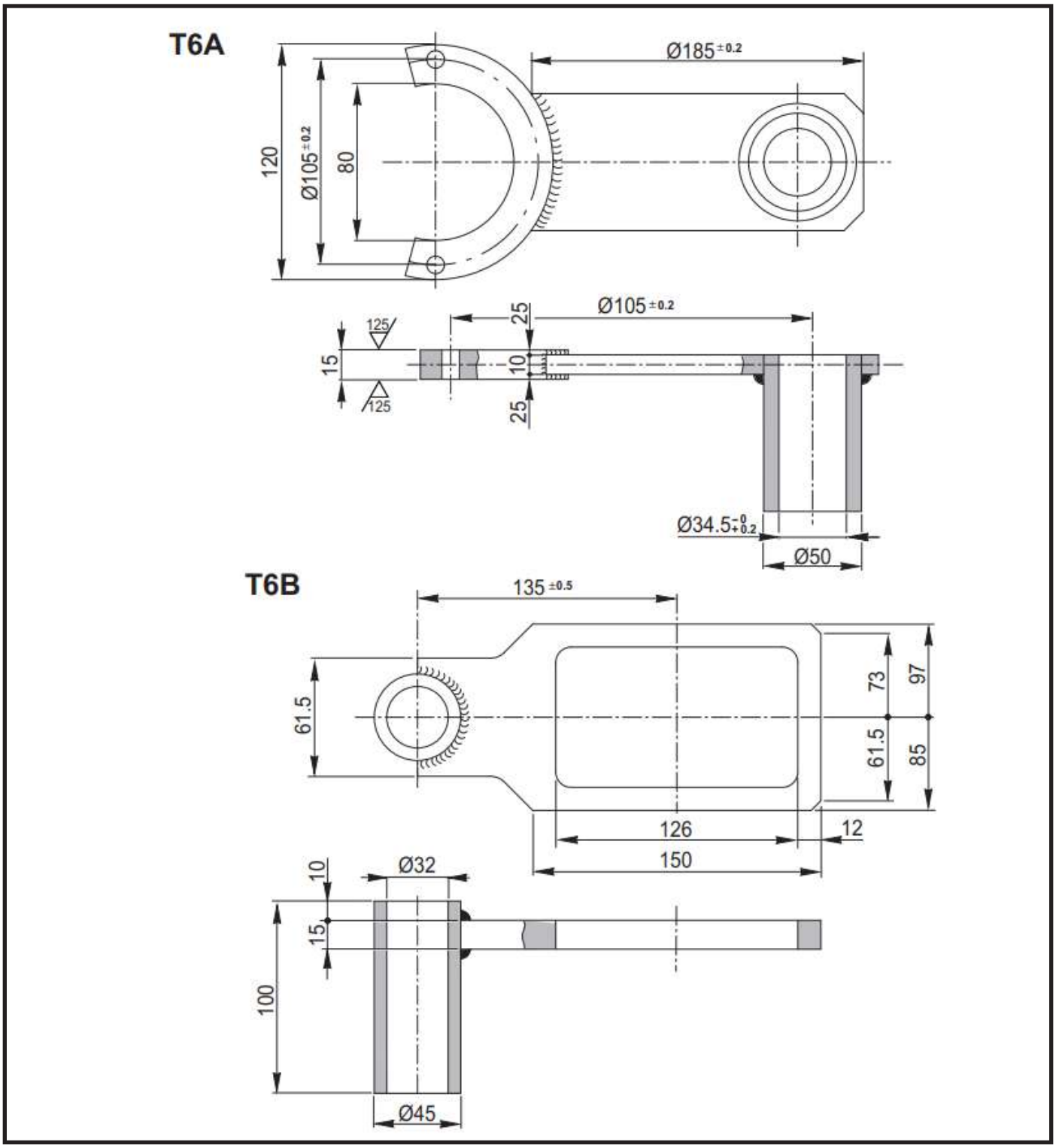
T6A
Ø185 ±0.2
120
Ø105 ±0.2
80
125
25
Ø105 ±0.2
15
10
125
25
Ø34.5 +0 -0.2
Ø50
T6B
135 ±0.5
61.5
73
97
61.5
85
126
12
150
10
Ø32
15
100
Ø45

COUNTER REVOLUTION SENSOR (DROP-IN TYPE)

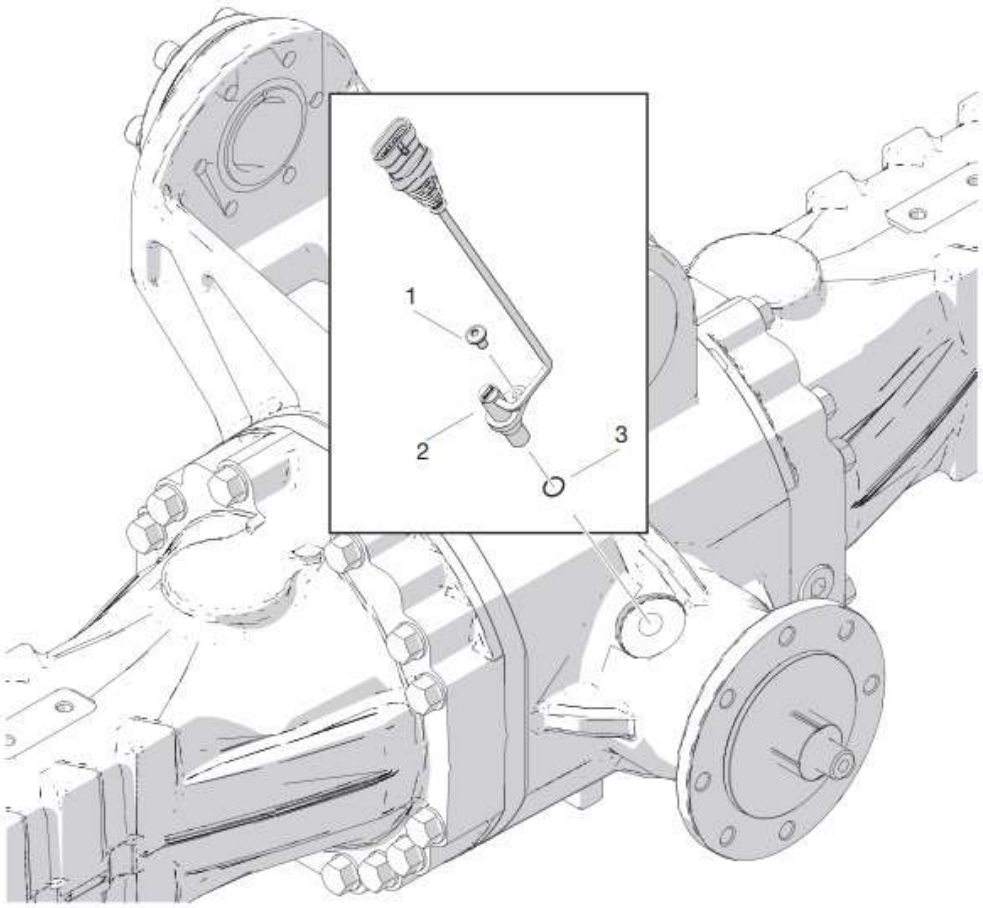

DISASSEMBLY

!	CAUTION
Before draining oil, release the internal pressure, for details see OIL DRAINING MANDATORY PROCEDURE.	

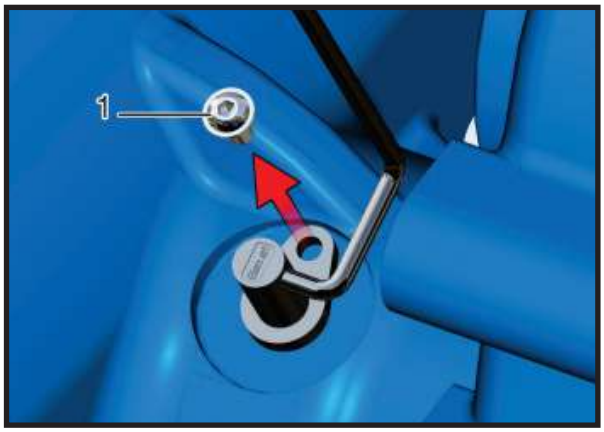

FIGURE 1: Loosen and remove the capscrew (**1**).

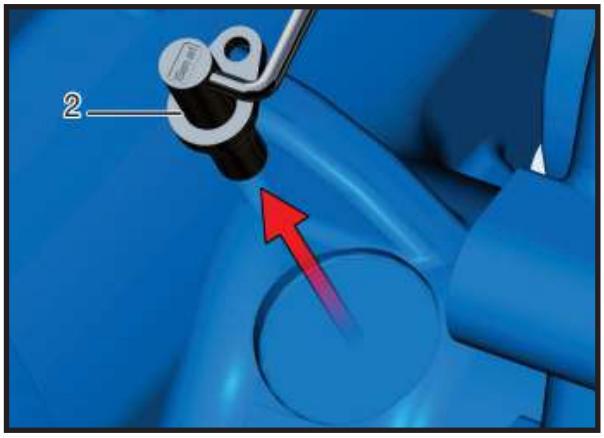

FIGURE 2: Remove the sensor (**2**) from its seat.

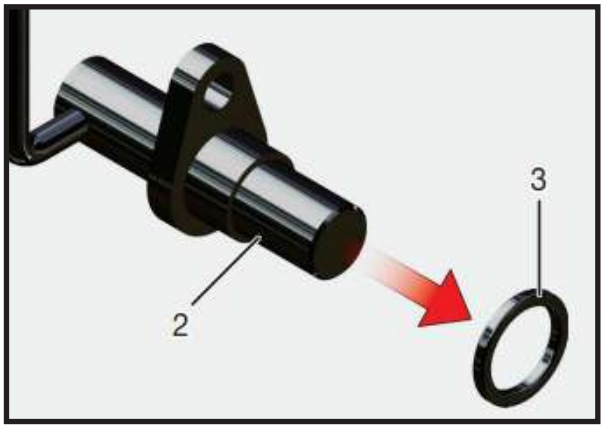

FIGURE 3: Replace the sensor o-ring (**3**).

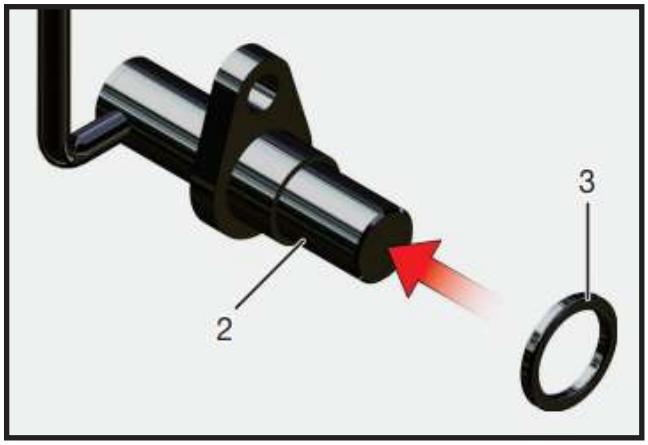

FIGURE 4: Assemble the new o-ring (**3**).

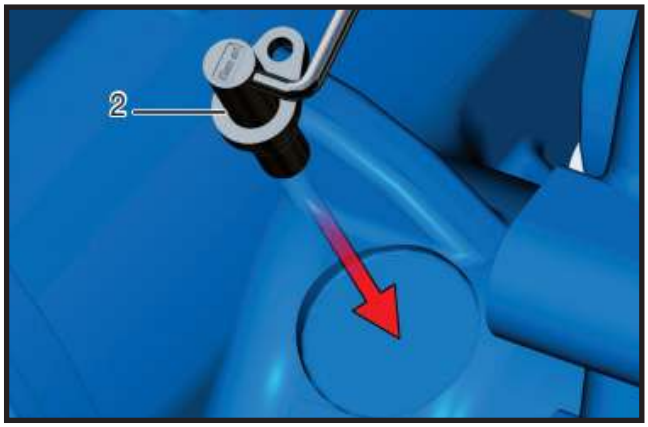

FIGURE 5: Install the sensor (**2**) in its seat.

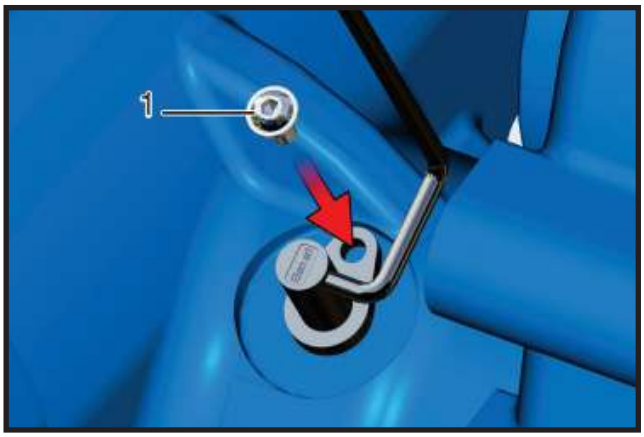

FIGURE 6: Apply Loctite 243 to threaded portion of the cap-screw (**1**). Assemble the capscrew (**1**) and tighten to a torque of 4-5 ft-lb (5 - 6 N·m).

Specifications
Definition of Viewpoints

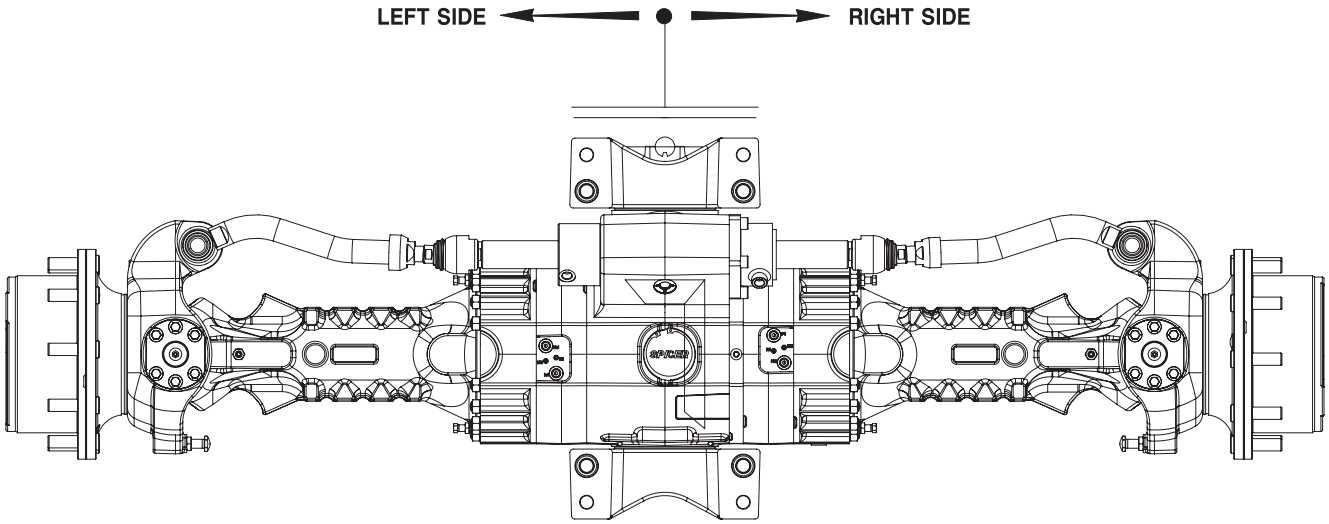

DATA PLATE

1 Model number

2 Reduction ratio

3 Serial number

4 Axle number

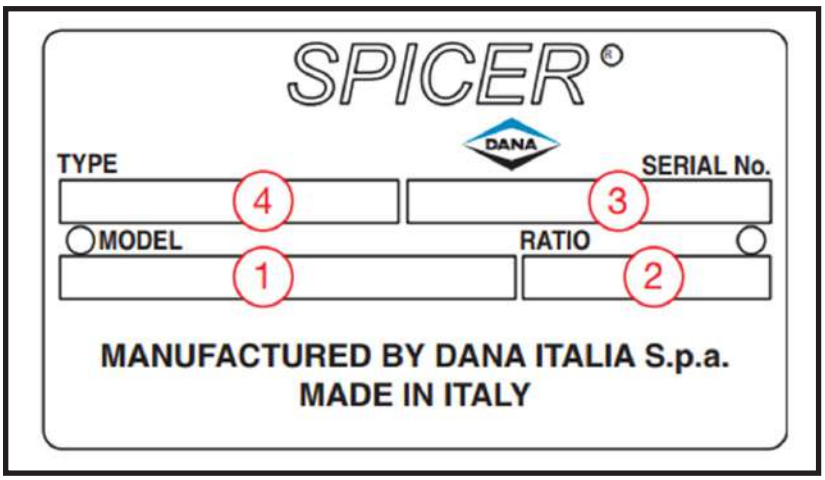

TRUNNION

Exploded View

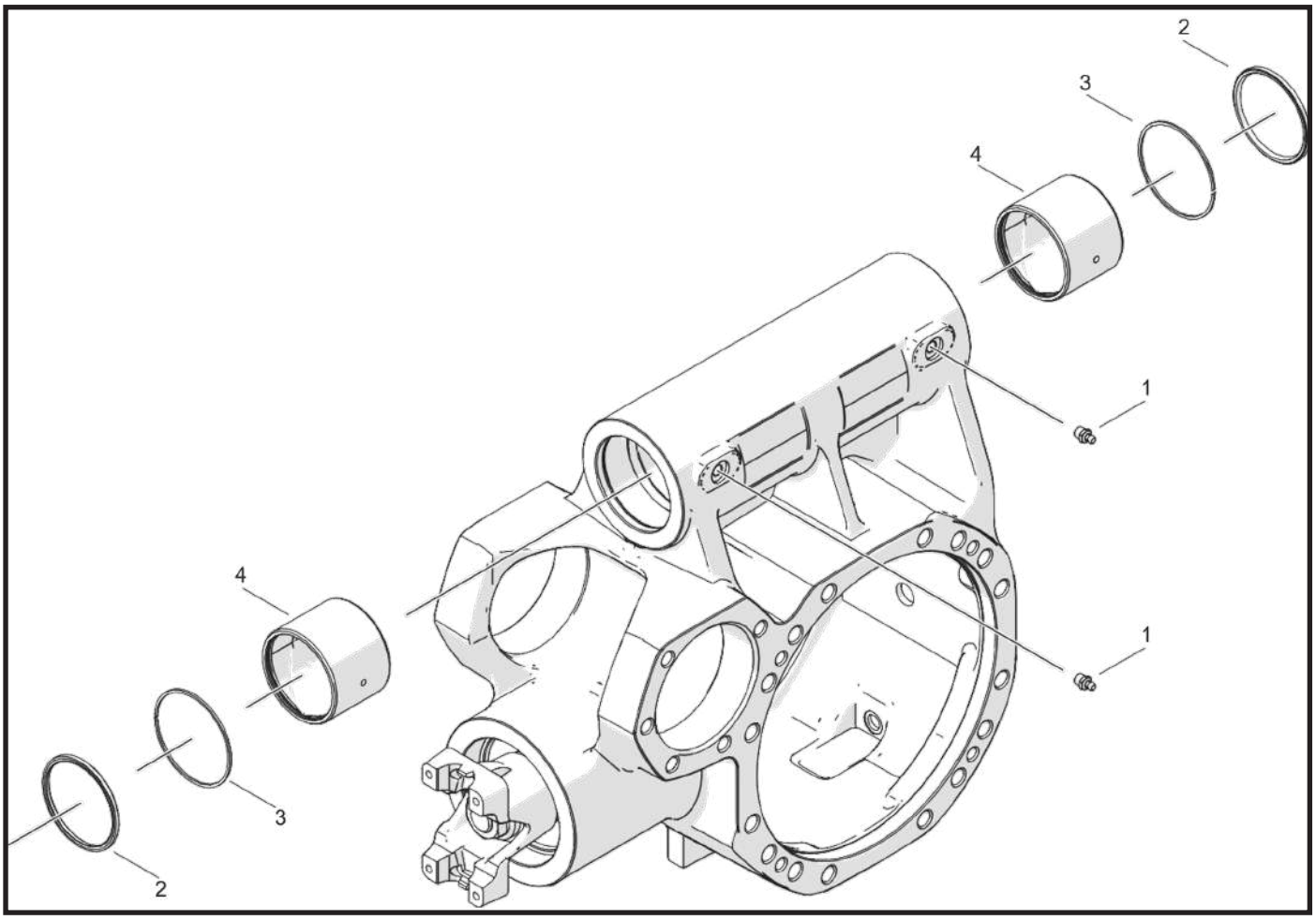

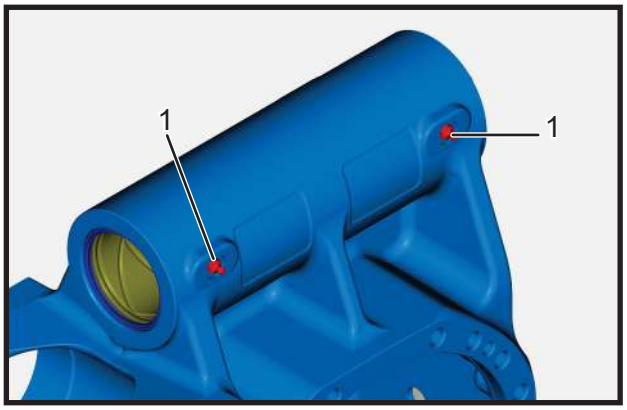

FIGURE 1: Remove the grease zerk (1).

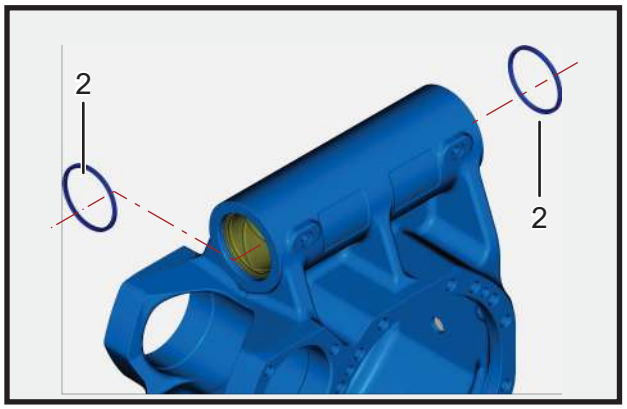

FIGURE 2: Remove the seal ring (2).

CAUTION

Take care not to damage the seal ring seating.

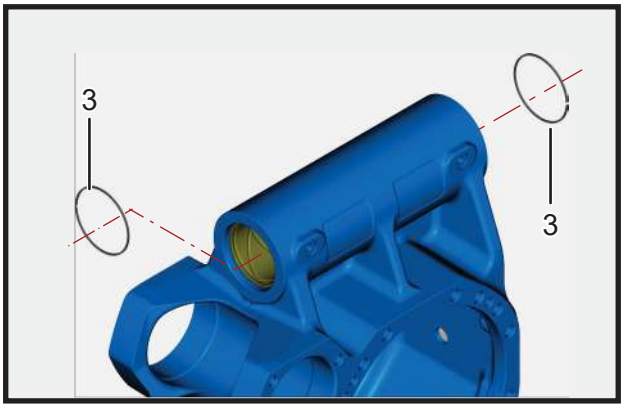

FIGURE 3: Remove the snap ring (3).

WARNING!

Removal of the snap rings can cause personal injuries. You must wear appropriate safety equipment. To avoid injury to eyes, wear eye protection equipment.

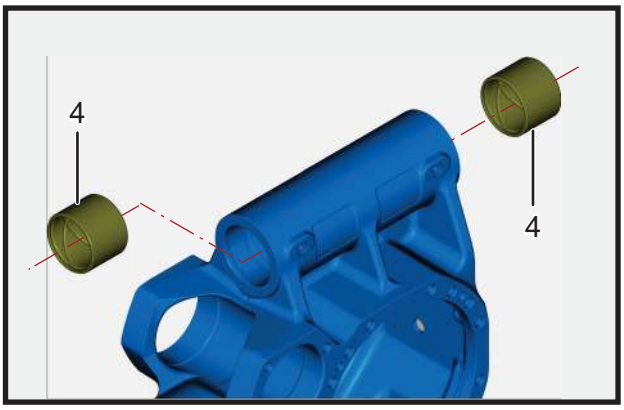

FIGURE 4: Using an extractor, remove the bushing (4) from the swinging support.

ASSEMBLY

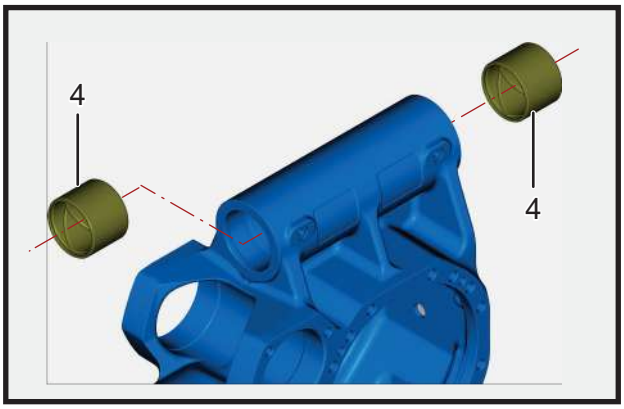

FIGURE 5: Install the bushing (4) in the swinging support.

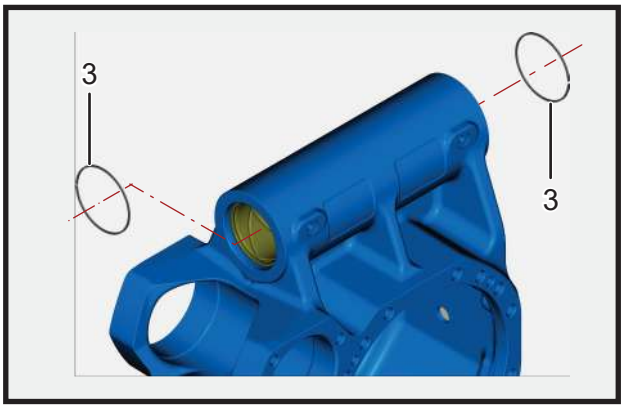

FIGURE 6: Install the snap ring (3).

WARNING!

Personal injury can result when installing snap ring. The appropriate safety equipment must be worn. To avoid injury to your eyes, wear protective glasses during this procedure.

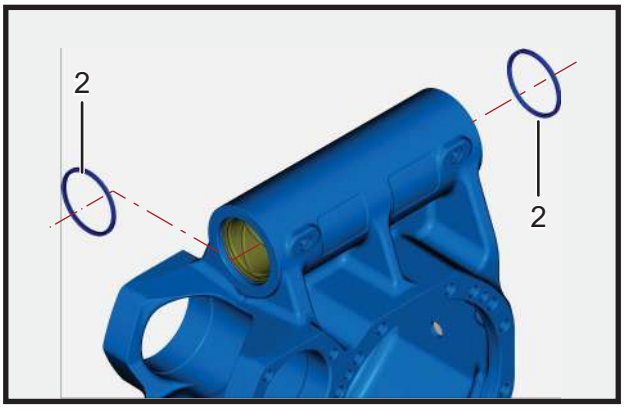

FIGURE 7: Press the sealing ring (2) into its seat.

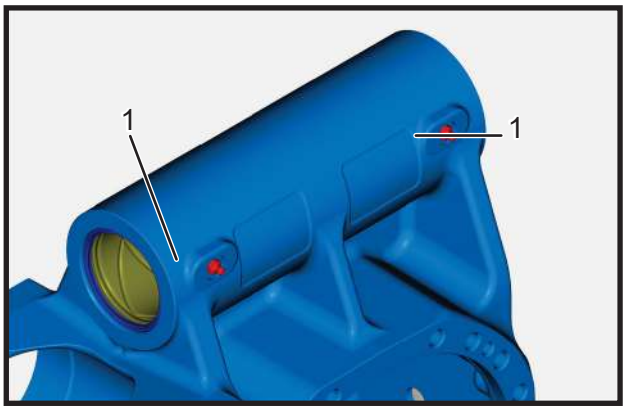

FIGURE 8: If removed, install the grease zerk (1). Torque wrench setting: 10 - 15 N·m.

PLANETARY REDUCTION GEAR

EXPLODED VIEW

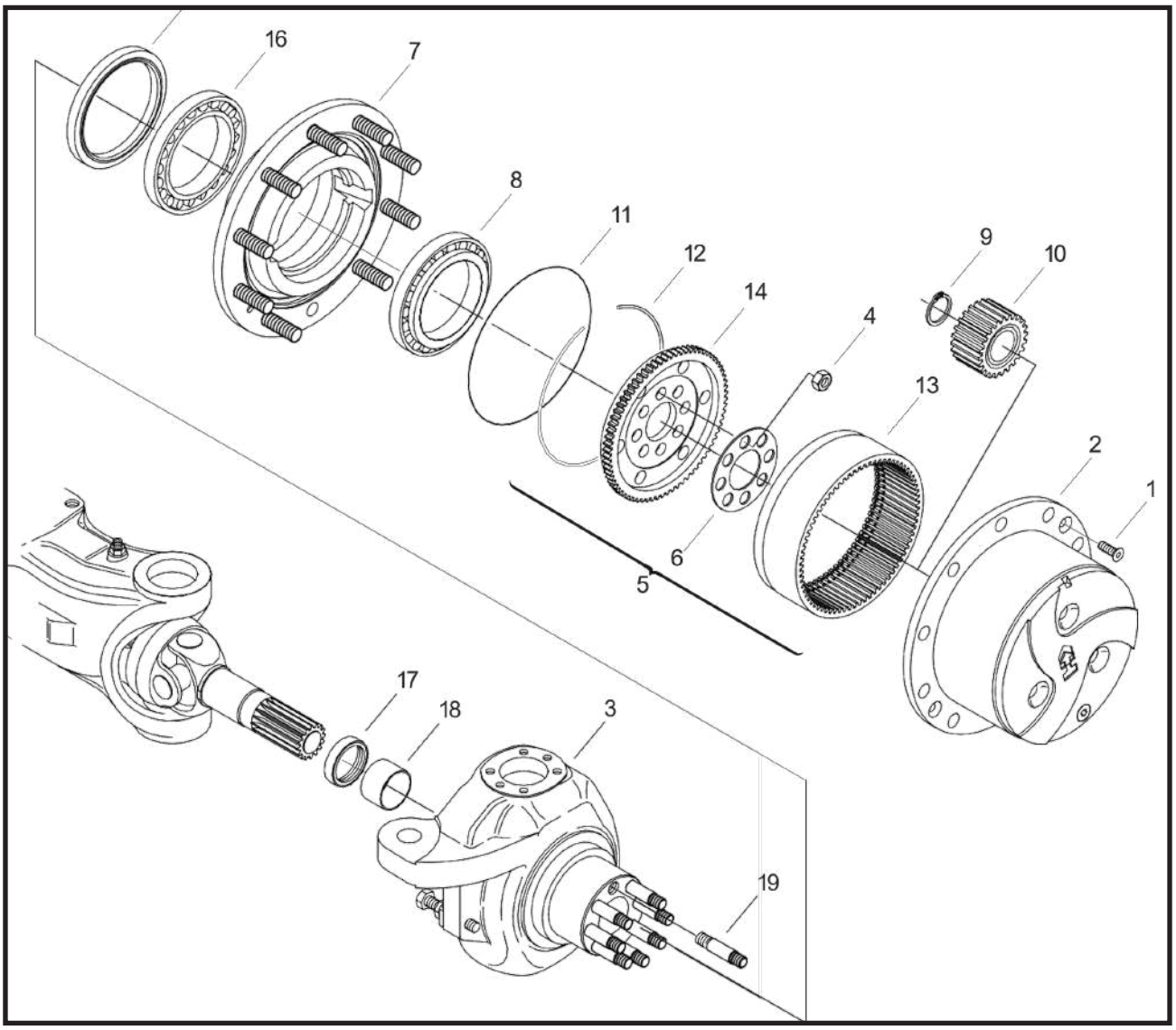

DISASSEMBLY

⚠CAUTION

Before draining oil, release the internal pressure, for details see OIL DRAINING MANDATORY PROCEDURE p. 14.

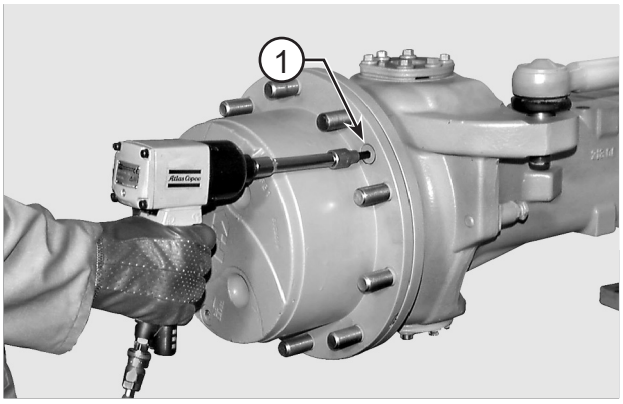

FIGURE 1: Remove check screws (1) from planetary cover.

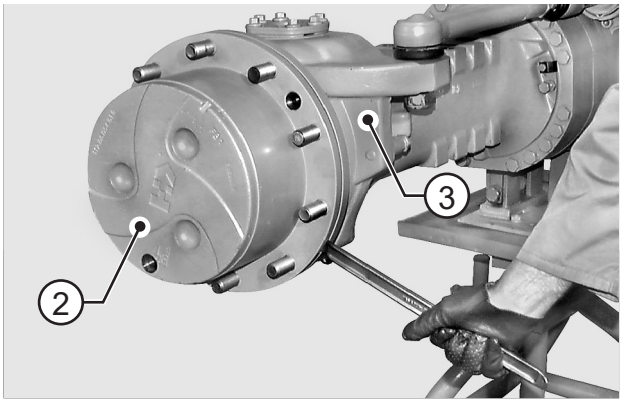

FIGURE 2: Alternately insert a lever in the slots provided and pry to separate the planetary cover (2) from the steering knuckle (3).

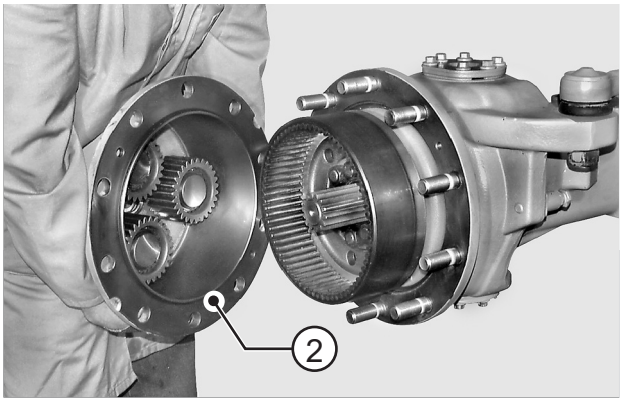

FIGURE 3: Remove the complete planetary cover (2).

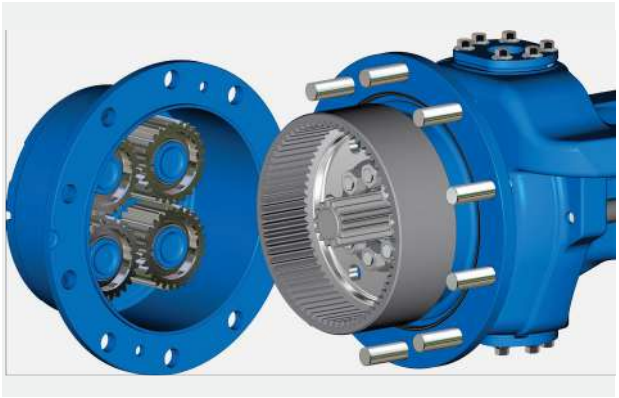

FIGURE 4: ONLY FOR HEAVY DUTY
Remove the complete planetary cover (2).

ⓘNOTE:

Heavy duty version is equipped with 4 planetary wheel gears. For disassembly, refer to following procedure.

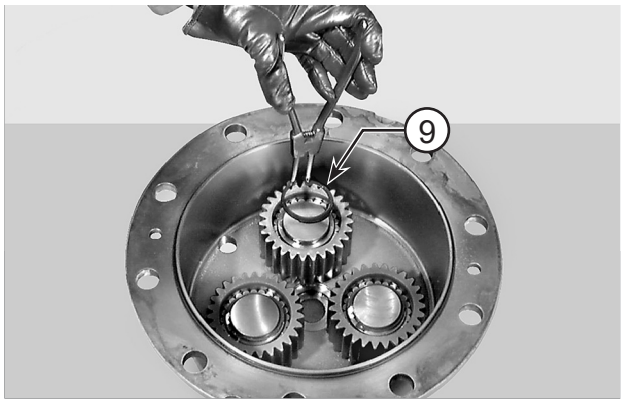

FIGURE 5: Remove the snap rings (9).

⚠CAUTION

MANDATORY PROCEDURE
Set the pliers following the correct procedure shown in END-STOP PLIER SETTING p. 15.

⚠WARNING

Removal of the snap rings can cause personal injuries. You must wear appropriate safety equipment. To avoid injury to eyes, wear eye protection equipment.

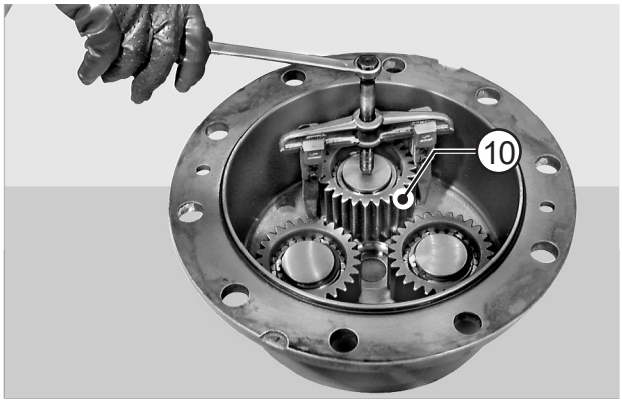

FIGURE 6: Using a puller, remove the planetary gears (10).

NOTE:

Write down direction of installation of planetary gears.

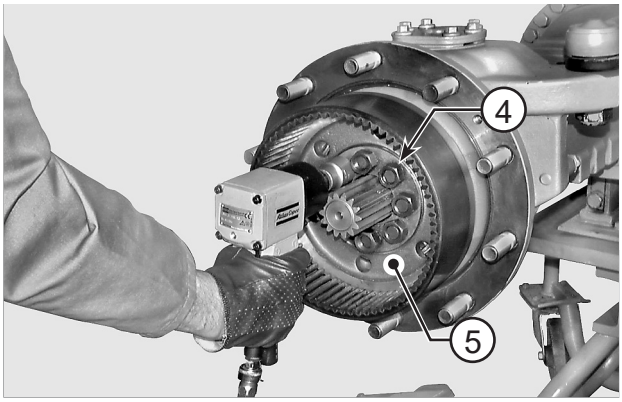

FIGURE 7: Loosen and remove the nuts (4) that lock the gear safety flange (5).

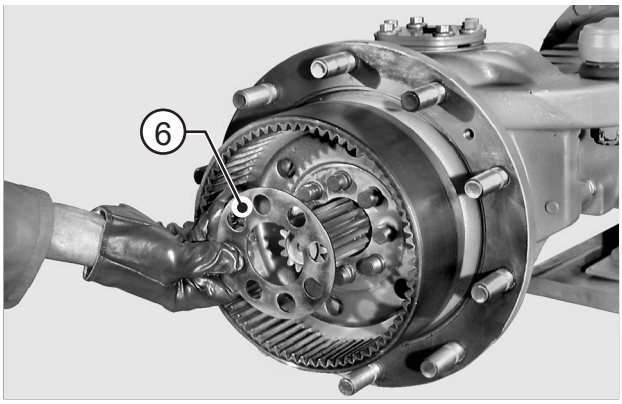

FIGURE 8: NOT PRESENT ON ALL MODELS
Remove safety flange (6).

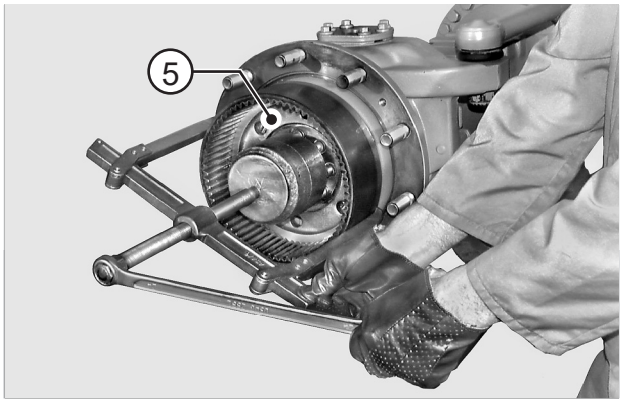

FIGURE 9: Remove the complete ring gear flange (5) by using a puller and applying counter pressure to the studs.

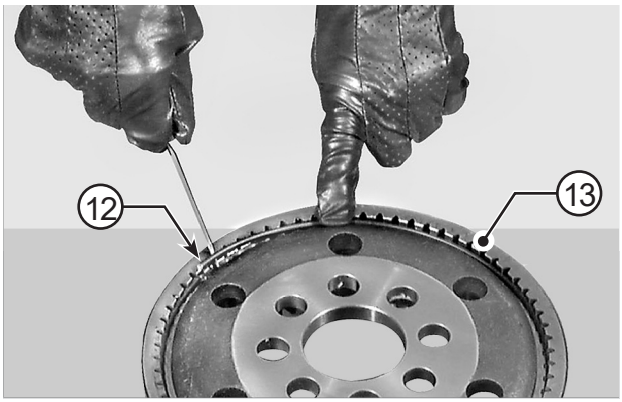

FIGURE 10: Remove the ring gear (13) snap ring (12).

⚠WARNING

Removal of the snap rings can cause personal injuries. You must wear appropriate safety equipment. To avoid injury to eyes, wear eye protection equipment.

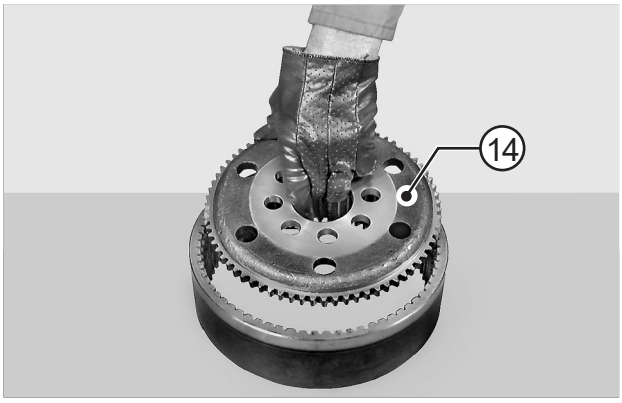

FIGURE 11: Remove ring gear flange (14).

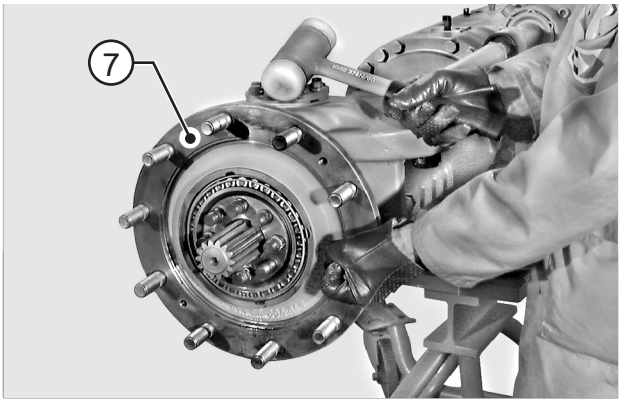

FIGURE 12: Partially extract the wheel hub (7) by using a plastic hammer.

NOTE:

Hammer alternately on several equidistant points.

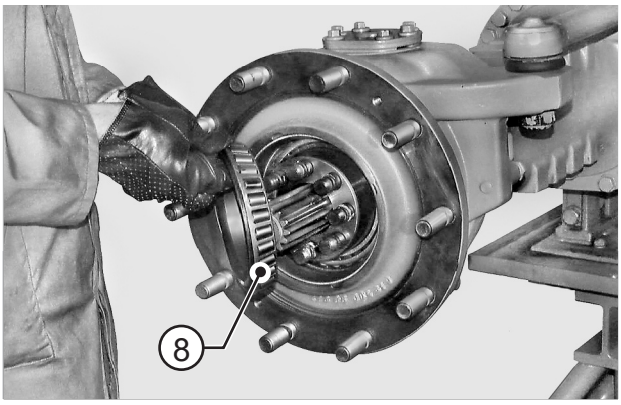

FIGURE 13: Remove the external bearing (8).

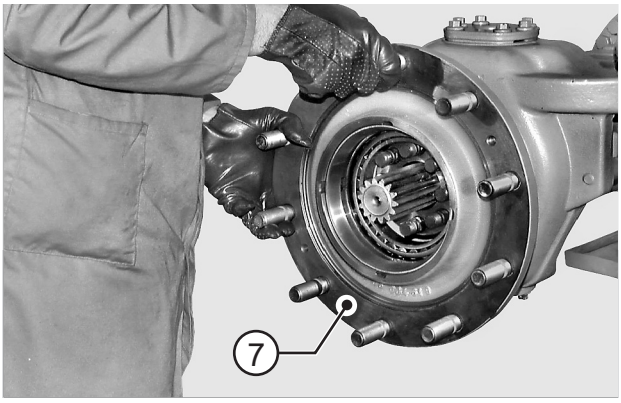

FIGURE 14: Draw out the wheel hub (7).

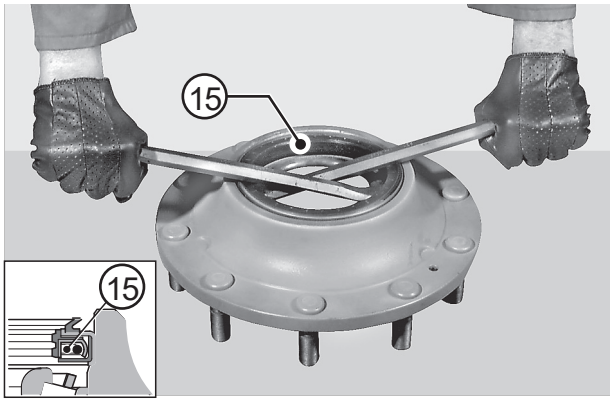

FIGURE 15: Remove seal ring (15) from wheel hub (7).

NOTE:

Mark the seal ring position.

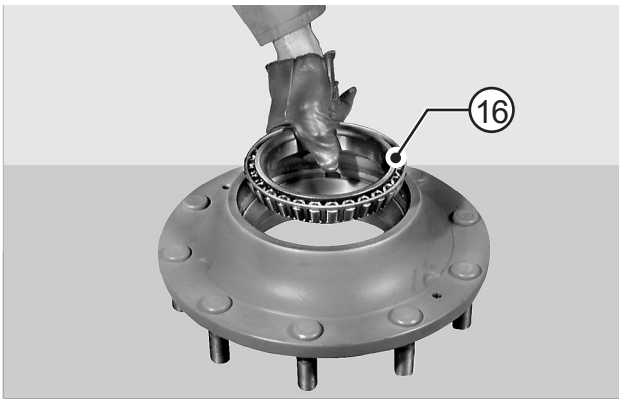

FIGURE 16: Remove inner bearing (16).

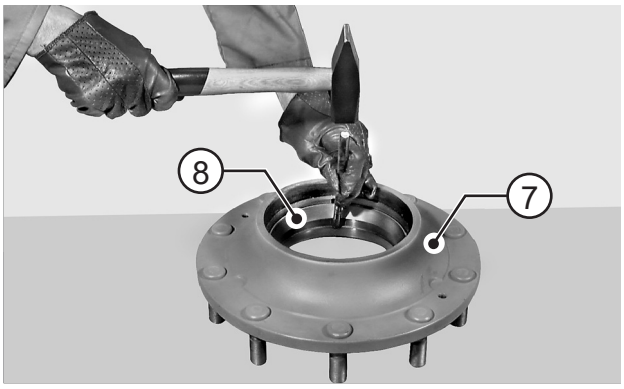

FIGURE 17: Remove the outer thrust blocks of bearings (8, 16) by driving a pin driver in the slots provided on the hub (7).

NOTE:

Hammer alternately to avoid thrust block clamping and deformation.

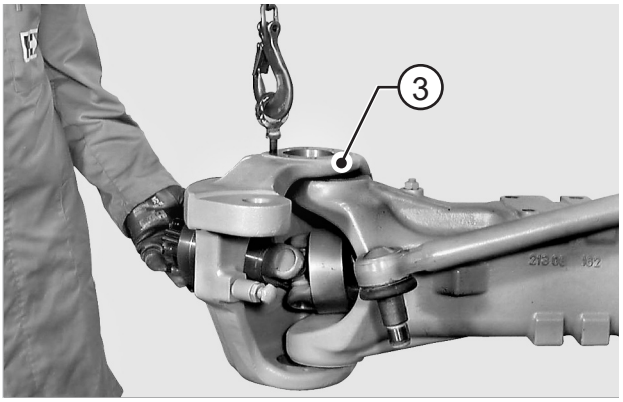

FIGURE 18: Take out the pins and remove the steering knuckle (3).
For pin removal details, see COMPLETE STEERING KNUCKLE p. 39.

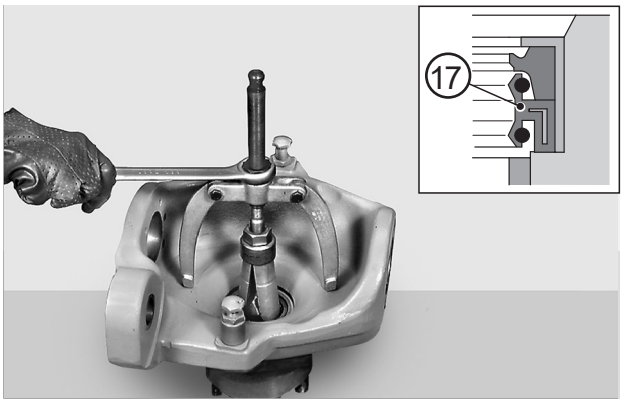

FIGURE 19: Using a puller, remove seal ring (17) from steering knuckle (3).

NOTE:

Write down seal ring orientation.

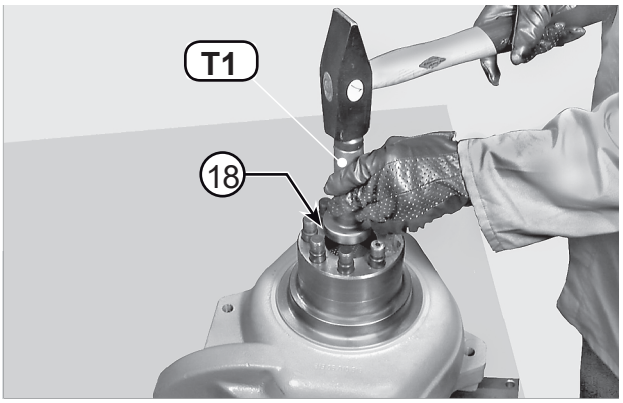

FIGURE 20: Using driver T1 (See drawing T1 p. 34), extract the guide bushing (18) of twin u-joint.
Only if necessary, remove any damaged studs (19), which need to be replaced.

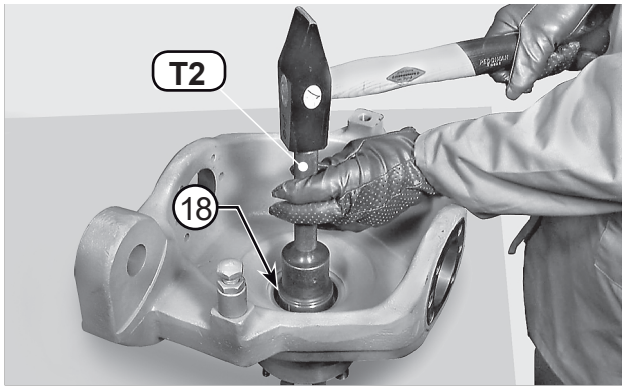

FIGURE 21: Fit the bushing (18) in the steering knuckle (3) using tool T2 (See drawing T2 p. 34).

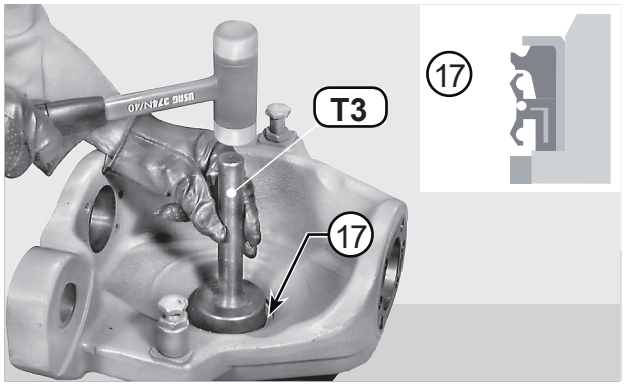

FIGURE 22: Apply a coat of AREXONS rubber cement to the outer metal surface of the snap ring (17). Position the seal ring and, using tool T3 (See drawing T3 p. 35), fit it in the appropriate seat.

⚠CAUTION

Check direction of installation carefully.

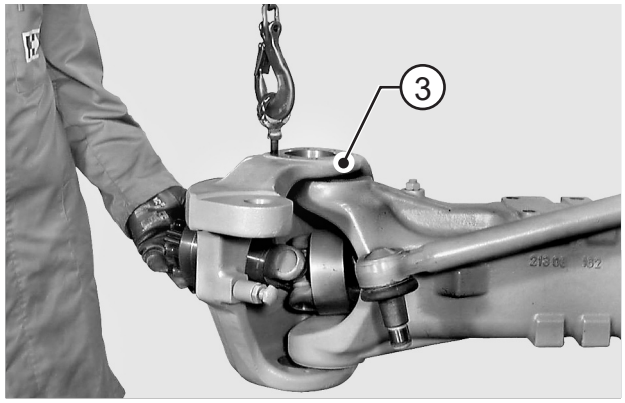

FIGURE 23: Oil the seal ring and bushing. Slip the steering knuckle (3) onto the twin u-joint and fit the pivot pins and connect the steering bar.
For details, see COMPLETE STEERING KNUCKLE p. 39.

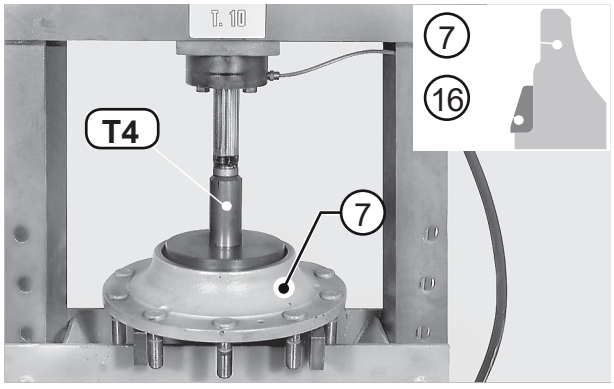

FIGURE 24: Position the wheel hub (7) under a press; lubricate the outer seat of bearing and, using tool T4 (See drawing T4 p. 36), install the thrust block of bearing (16).

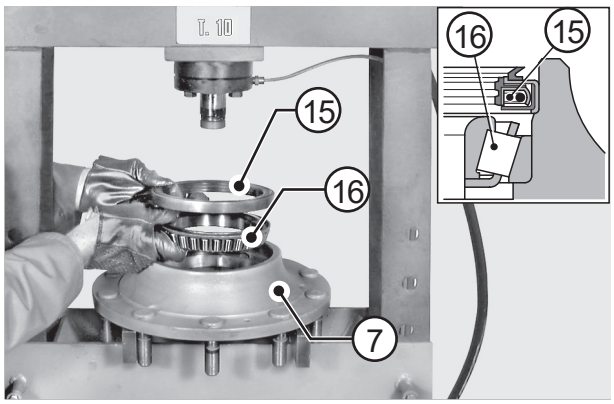

FIGURE 25: Install bearing (16).
Apply Arexons seal rubber cement to the outer surface of seal ring (15).
Position the seal ring (15) in the hub (7).

⚠CAUTION

Check ring orientation carefully.

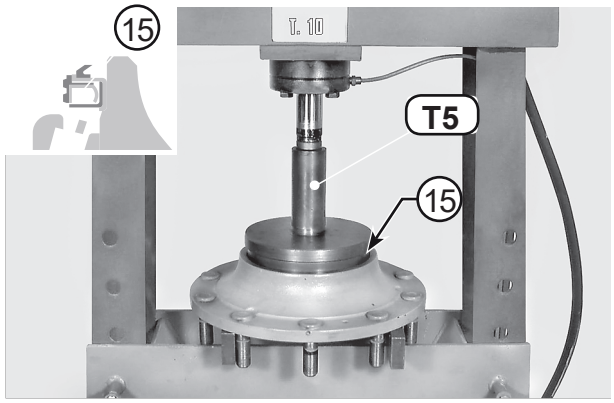

FIGURE 26: Position tool T5 (See drawing T5 p. 37) and press the seal ring (15) into its seat.

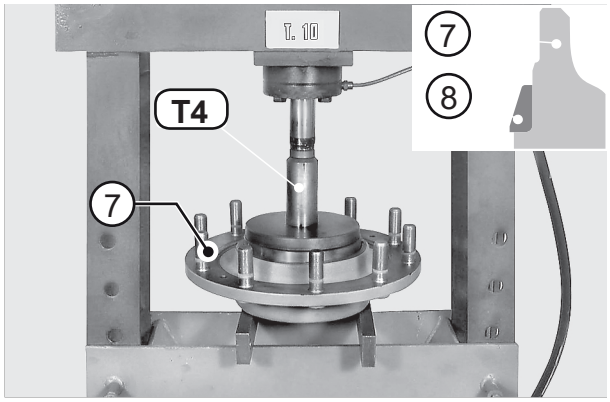

FIGURE 27: Turn the hub over (7), lubricate bearing seat and, using tool T4 (See drawing T4 p. 36) install the bearing thrust block (8).

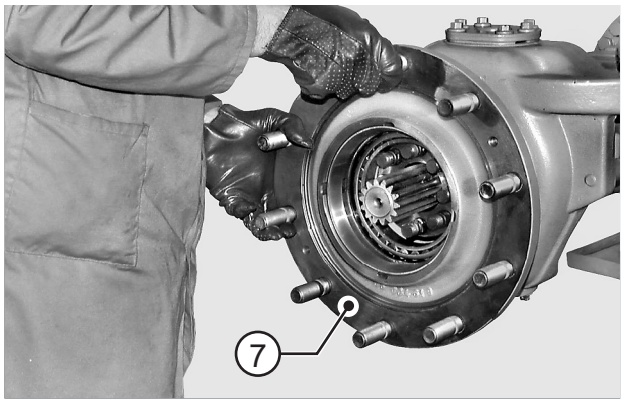

FIGURE 28: Install the wheel hub (7) onto the steering knuckle (3).

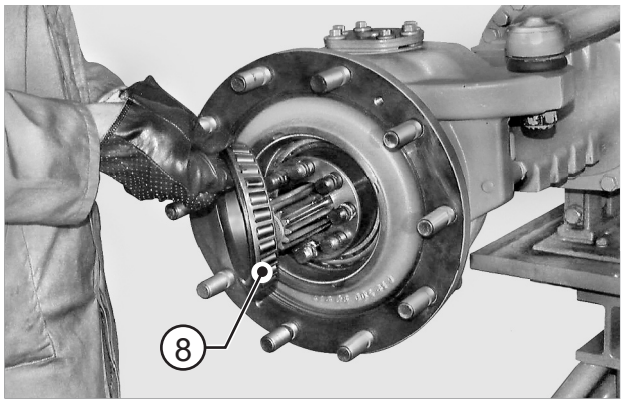

FIGURE 29: Install the outer bearing (8).

NOTE:

Push the bearing as far as it will go by tapping with a plastic hammer all around the rim.

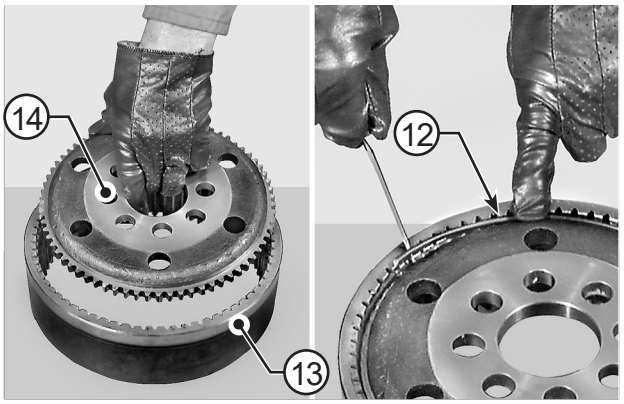

FIGURE 30: Fit the flange (14) in the ring gear (13) and lock into position with snap ring (12).

⚠WARNING

Personal injury can result when installing snap ring. The appropriate safety equipment must be worn. To avoid injury to your eyes, wear protective glasses during this procedure.

NOTE:

Check that snap ring (12) is fully inserted in the slot of ring gear (13).

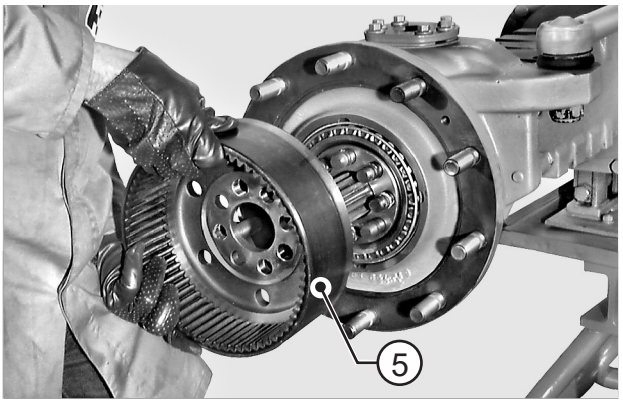

FIGURE 31: Install the complete ring gear flange (5).

NOTE:

To engage the flange (5), use a plastic hammer and hammer alternately on several equidistant points.

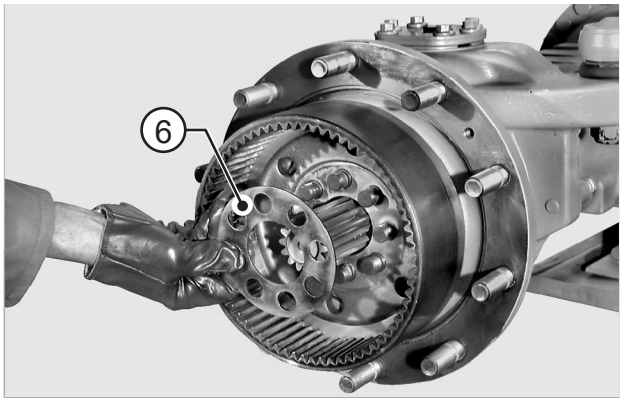

FIGURE 32: **STANDARD NUTS MODELS:**
Ensure that faces are thoroughly cleaned, and then install the safety flange (6).

NOTE:

SAFETY PLATE ONLY FOR STANDARD NUTS

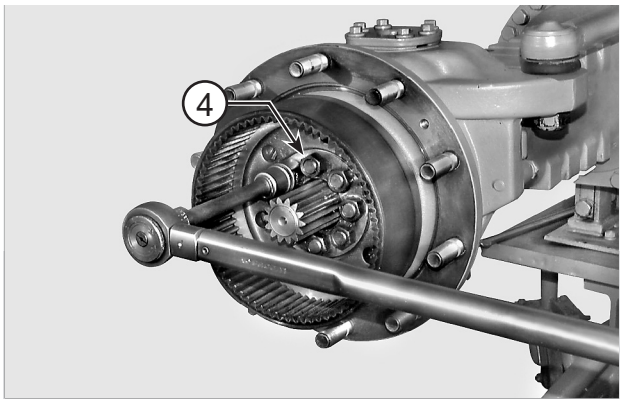

FIGURE 33: **STANDARD NUTS MODELS:**
Install the new nuts (4) and tighten them using the criss-cross method applying initial tightening torque of 100 N·m. Pay attention to clean the thread of the original stud. Final torque wrench setting: 300 - 385 N·m.

⚠CAUTION

It is recommended to use only new components. Use only new screws pre-treated with Driloc locking adhesive. Threads must be cleaned from oil. Clean the thread in the arm.

Degrease only non pre-treated threads.

NOTE:

If studs (19) have been removed or got loose during nuts (4) removal, clean the thread in the arm and replace the studs tightening to 70 - 110 N·m.

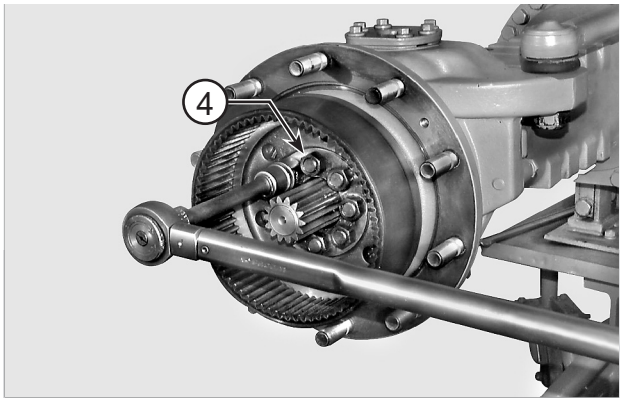

FIGURE 34: **FLANGED NUTS MODELS:**
Install the new nuts (4) and tighten them using the criss-cross method applying initial tightening torque of 100 N·m. Pay attention to clean the thread of the original stud. Final torque wrench setting: 410 - 450 N·m.

⚠CAUTION

It is recommended to use only new components. Use only new screws pre-treated with Driloc locking adhesive. Threads must be cleaned from oil. Clean the thread in the arm.

Degrease only non pre-treated threads.

NOTE:

DON'T USE THE SAFETY PLATE ON FLANGED NUTS MODELS

NOTE:

If studs (19) have been removed or got loose during nuts (4) removal, clean the thread in the arm and replace the studs tightening to 70 - 110 N·m.

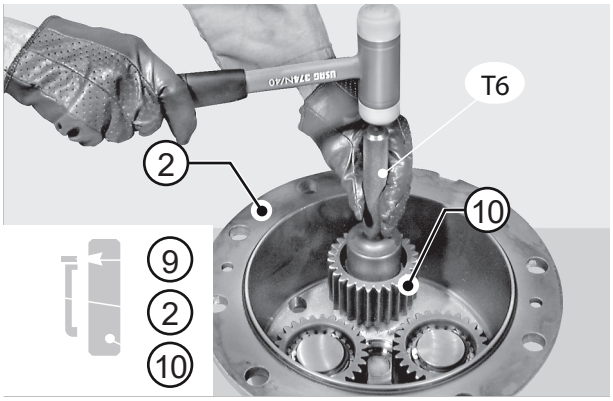

FIGURE 35: Install gears (10) onto the pins of the planetary cover (2).
To insert gears, use tool T6 (See drawing T6 p. 37).

⚠CAUTION

The radiused part of bearings' inner ring must face the bottom of the pin.

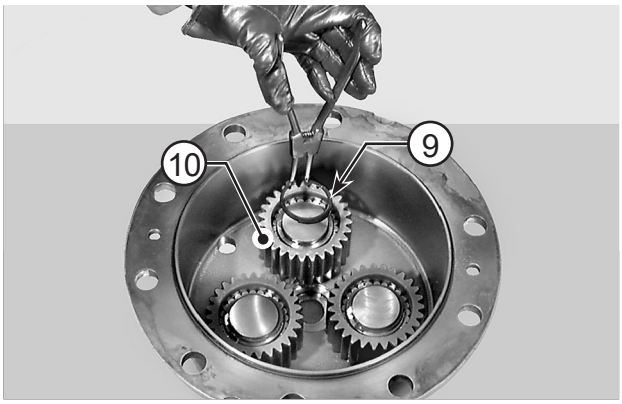

FIGURE 36: Lock gears (10) into position by installing the snap rings (9).
Ensure the snap ring (9) is in its seat.

⚠CAUTION

MANDATORY PROCEDURE
Set the pliers following the correct procedure shown in END-STOP PLIER SETTING p. 15.

⚠WARNING

Personal injury can result when installing snap ring. The appropriate safety equipment must be worn. To avoid injury to your eyes, wear protective glasses during this procedure.

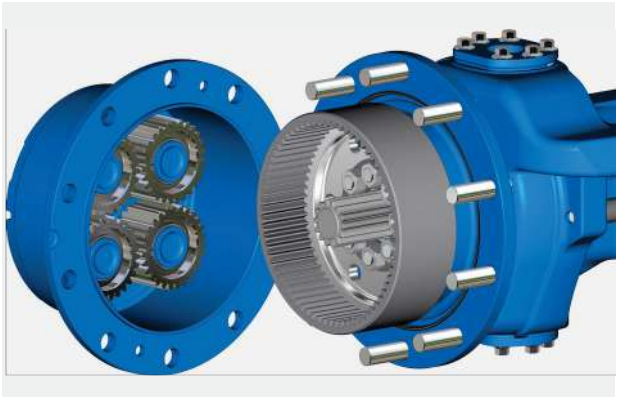

FIGURE 37: ONLY FOR HEAVY DUTY
Fit the planetary cover (2) on the wheel hub (7).

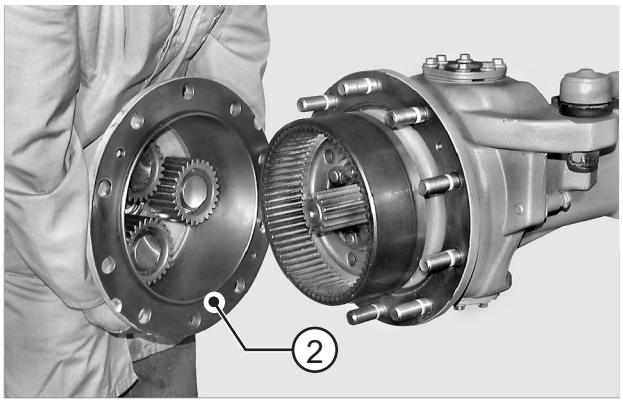

FIGURE 38: Fit the planetary cover (2) on the wheel hub (7).

⚠CAUTION

Check state and position of o-ring (11).

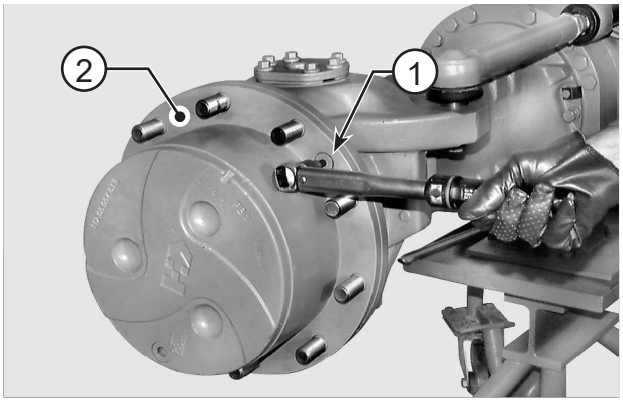

FIGURE 39: Lock the planetary cover (2) with screws (1).
Tightening torque for screws: 40 - 50 N·m.

SPECIAL TOOLS

T1

P/N: 2364

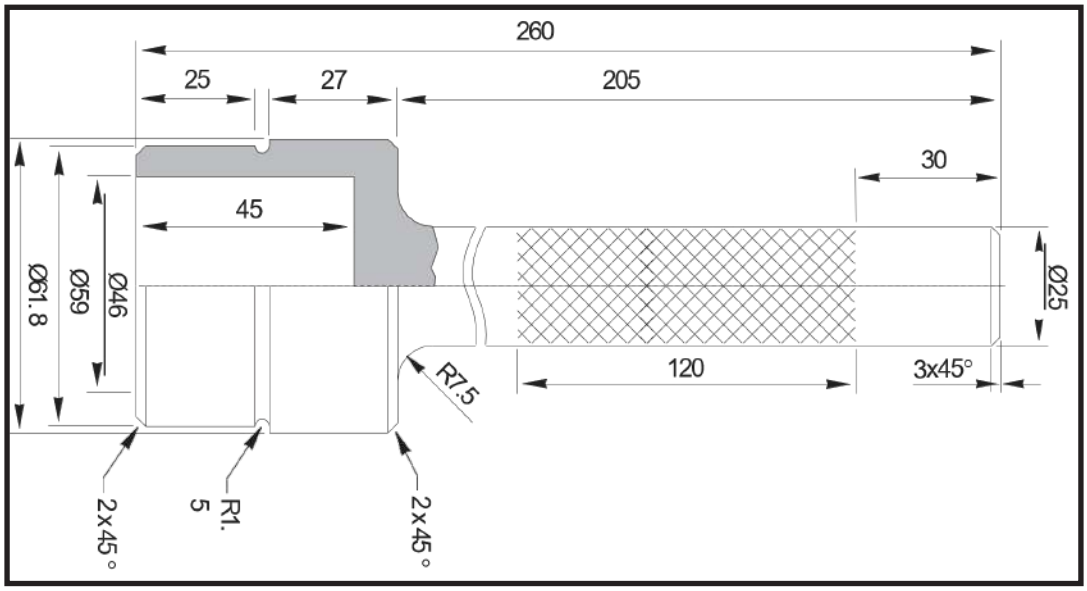

T2

P/N: 3348

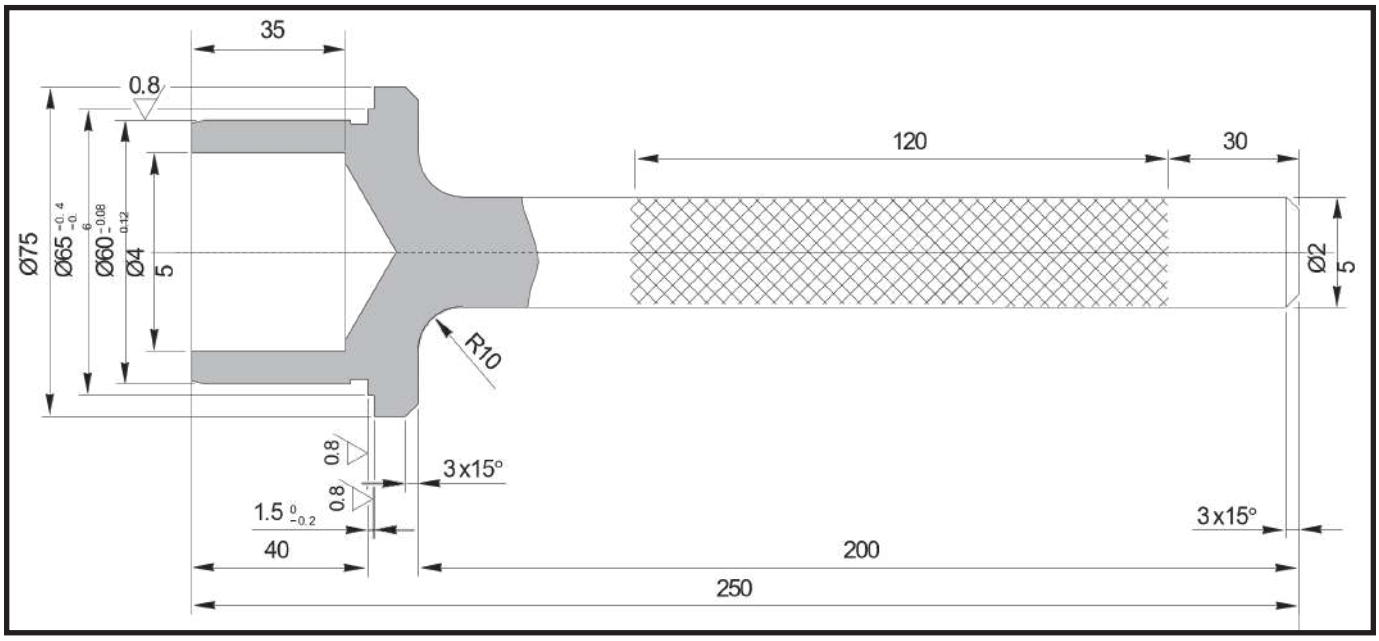

T3

P/N: 2365

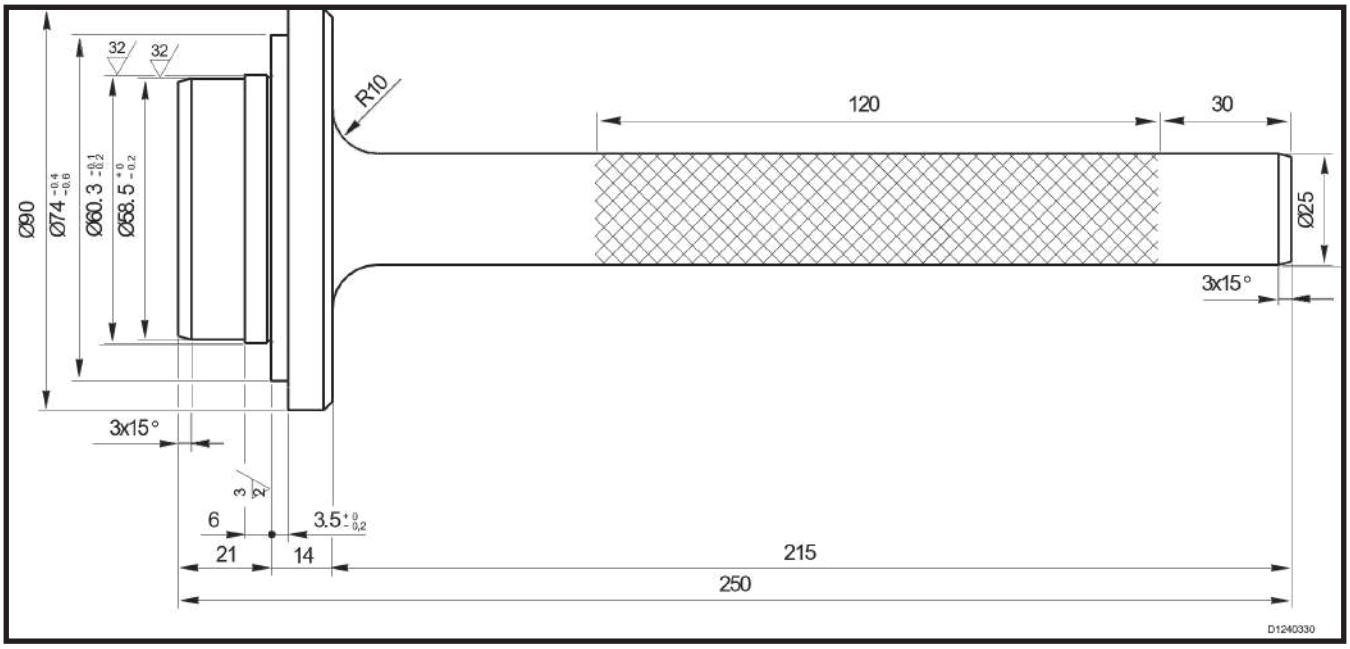
32
32
R10
120
30
Ø90
Ø74 -0.4 -0.6
Ø60.3 -0.1 -0.2
Ø58.5 +0 -0.2
Ø25
3x15°
3x15°
3
2
6
3.5 +0 -0.2
21
14
215
250
D1240330

T4

P/N: 3265

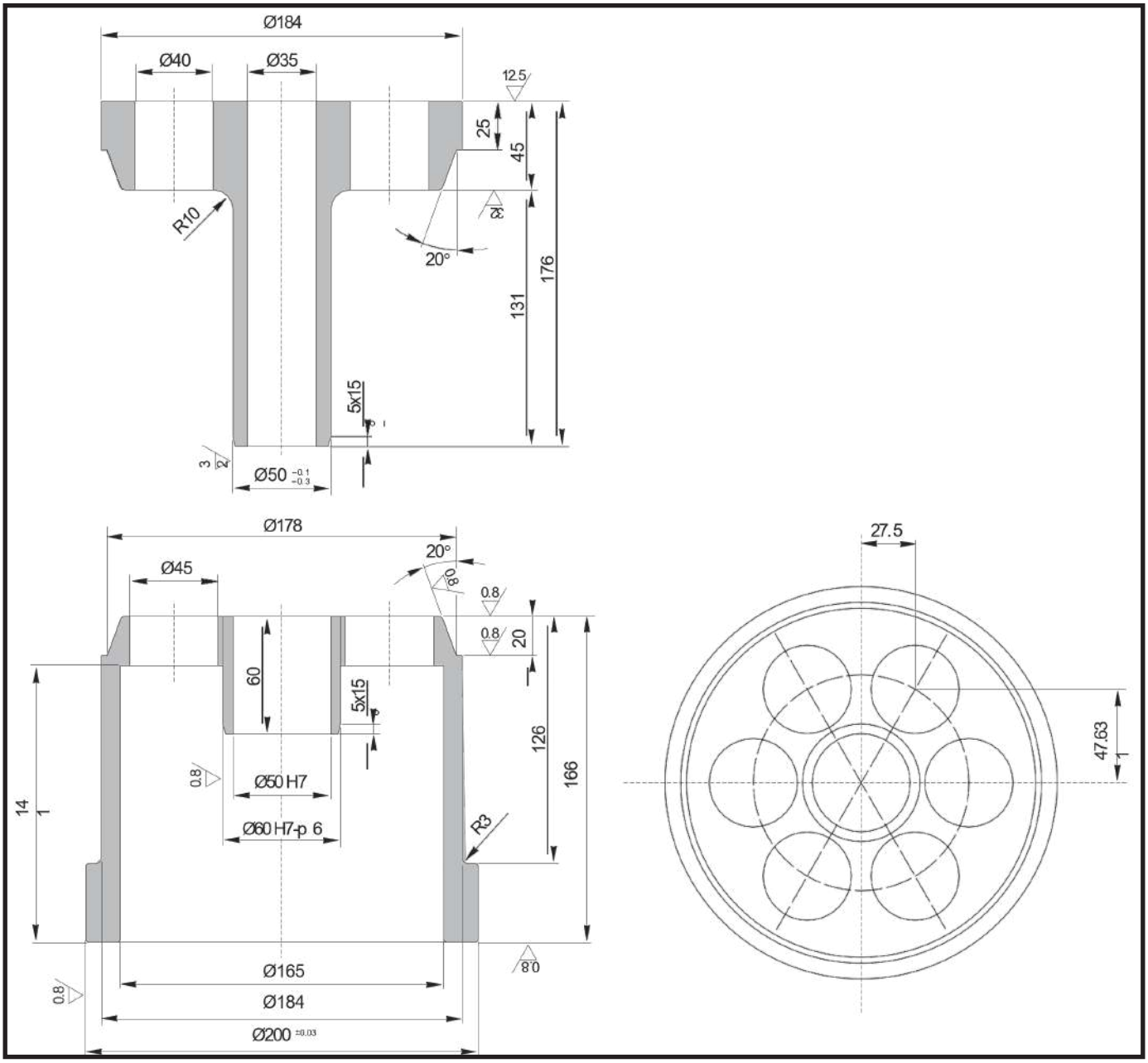
Ø184
Ø40
Ø35
12.5
25
45
8
R10
20°
131
176
5x15
3
2
Ø50 -0.1 -0.3
Ø178
20°
8
Ø45
0.8
0.8
20
60
5x15
126
166
14
1
0.8
Ø50 H7
Ø60 H7-p 6
R3
8
0.8
Ø165
Ø184
Ø200 ±0.03
27.5
47.63
1

T5

P/N: 2366

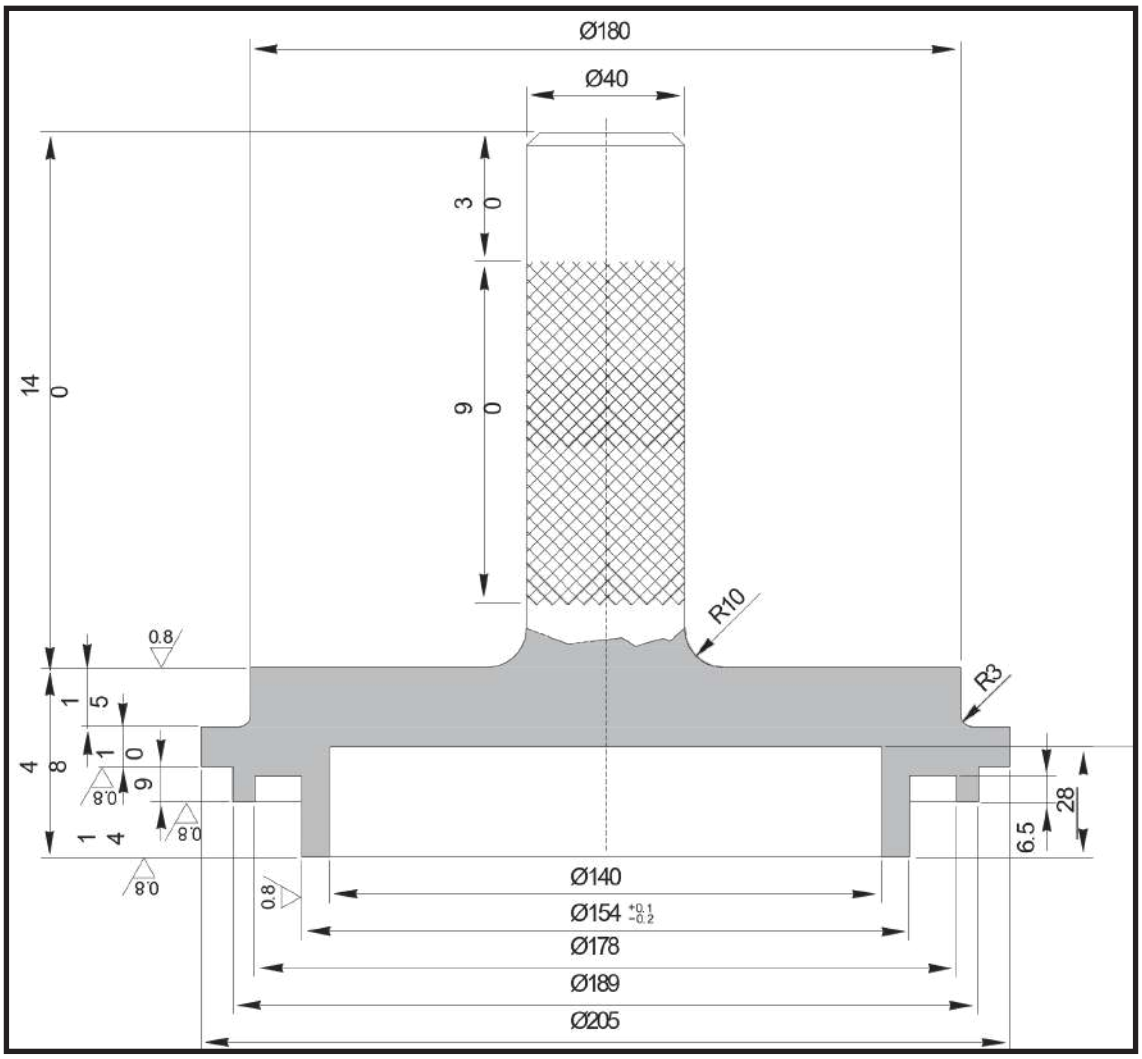

T6

P/N: 2378

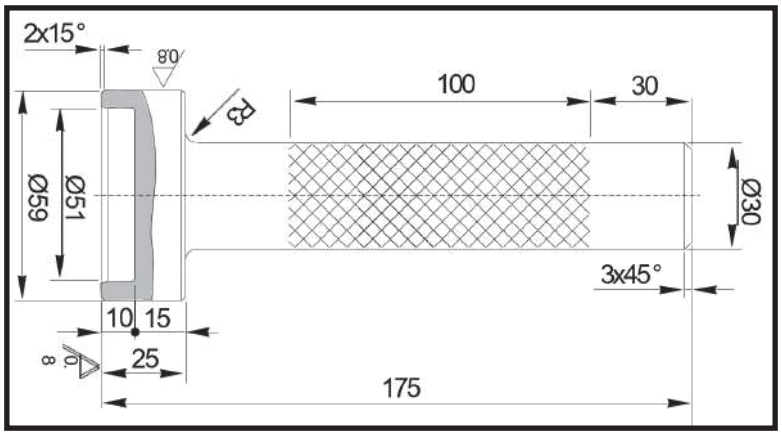

COMPLETE STEERING KNUCKLE

EXPLODED VIEW

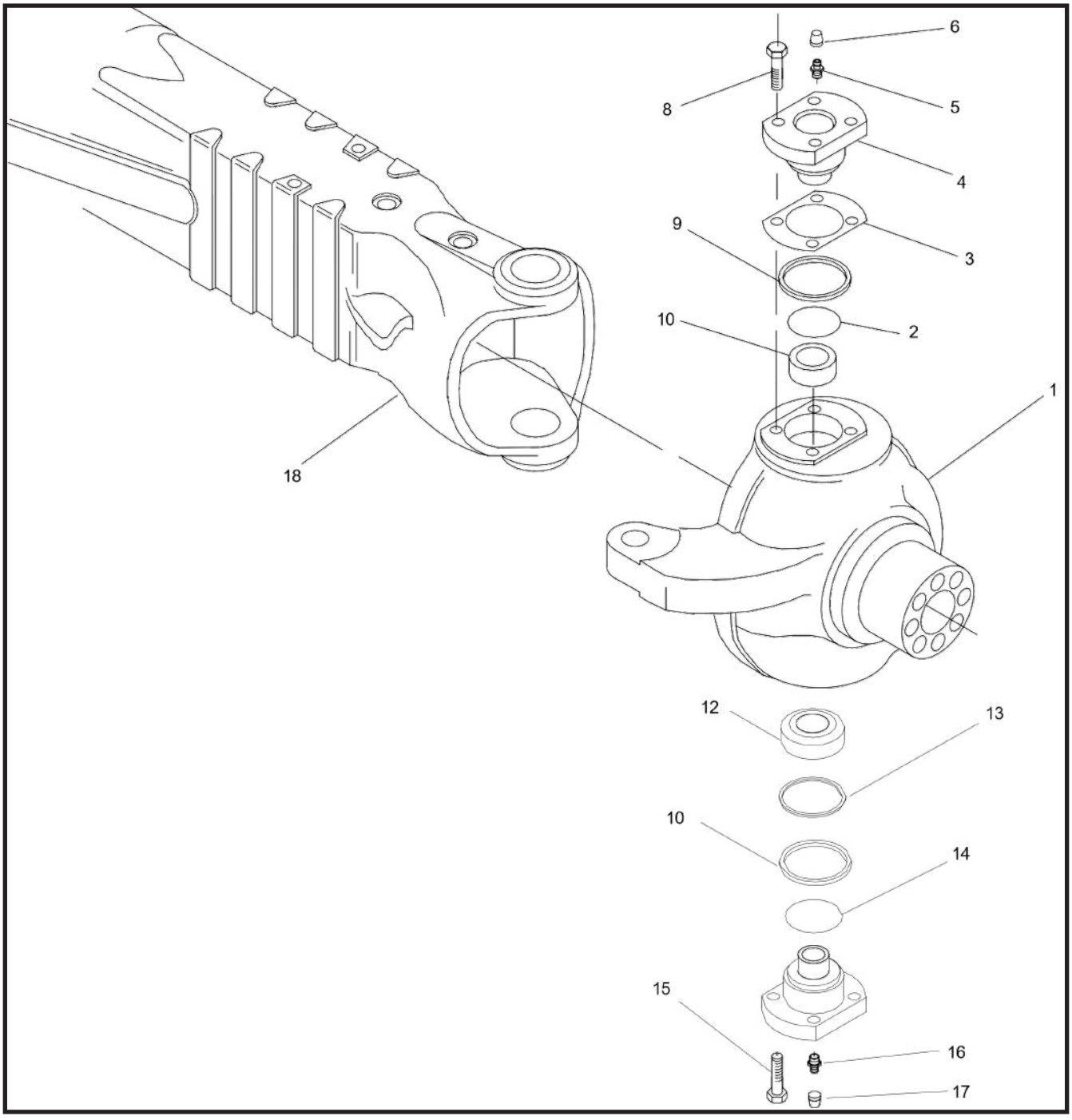

DISASSEMBLY

⚠CAUTION

Before draining oil, release the internal pressure, for details see OIL DRAINING MANDATORY PROCEDURE p. 14.

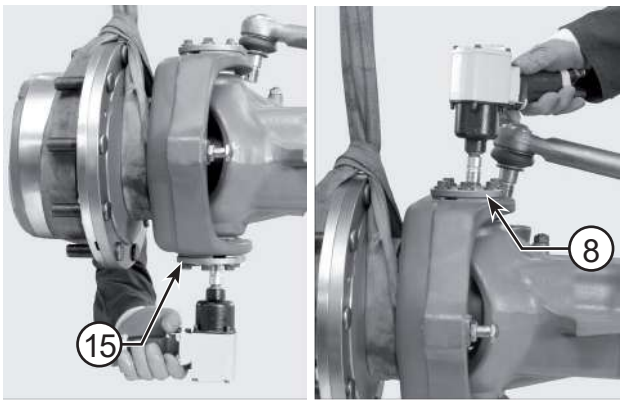

FIGURE 1: Loosen and remove the capscrews (15, 8) from the knuckle post (19, 4).

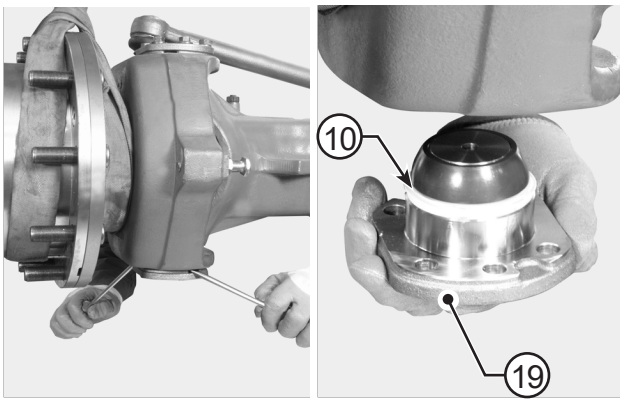

FIGURE 2: Remove the bottom articulation (19) pin complete with front sealing ring (10).

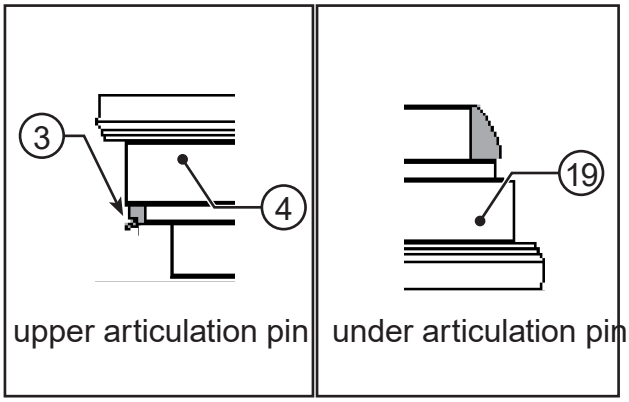

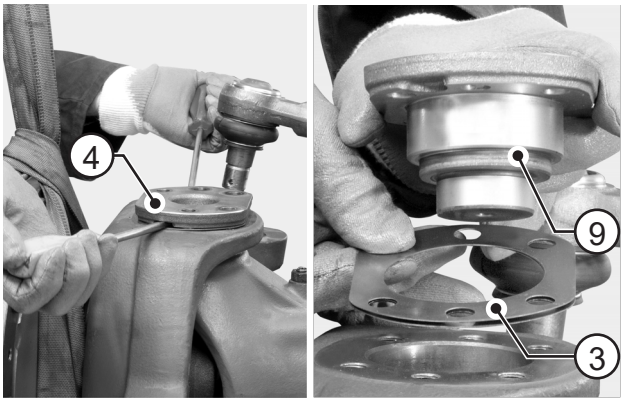

FIGURE 3: Using two levers, remove the top knuckle post (4) complete with front seal (9) and shims (3). Pay attention not to damage the surfaces.

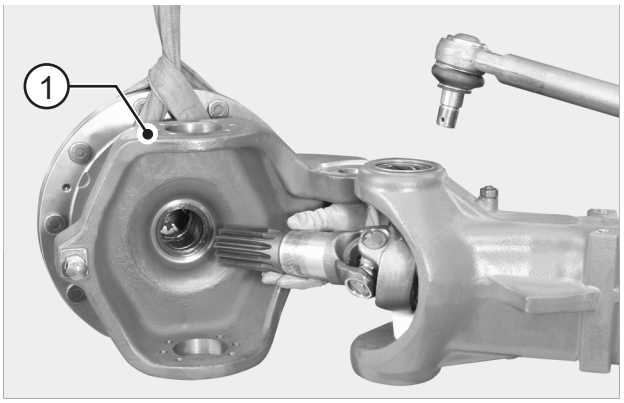

FIGURE 4: Remove the complete steering knuckle (1).

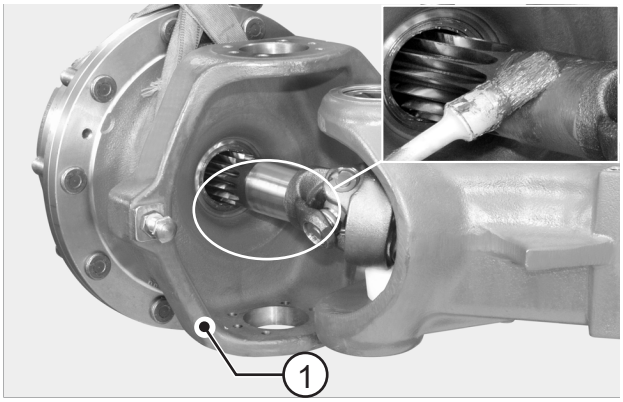

FIGURE 5: Lubricate the terminal of the u-joint and install the steering knuckle (1). Pay attention not to damage the dust cover rings and the sealing rings.

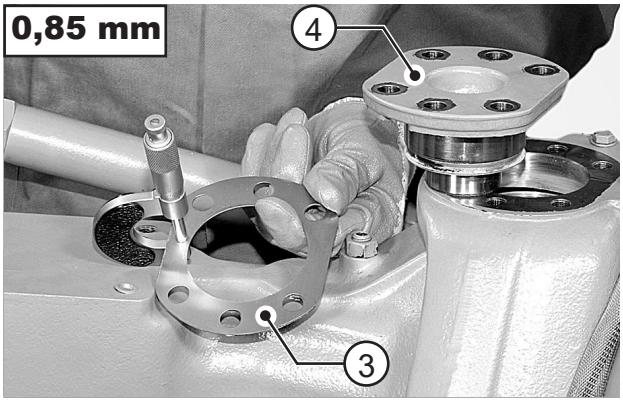

FIGURE 6: Prepare a series of shims (3) of 0,85 mm to be assembled under the upper pin (4).

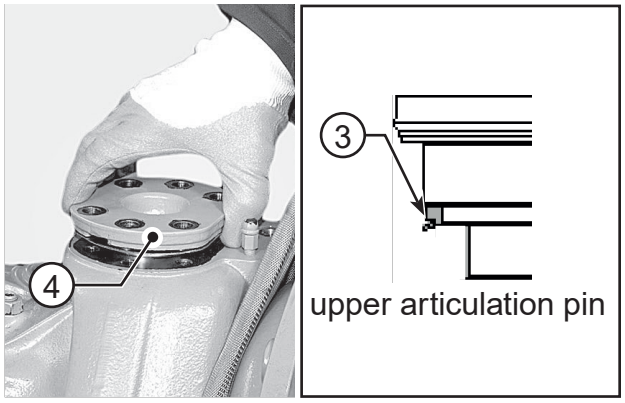

FIGURE 7: Fit a new seal (3) onto the top knuckle post (4). Lubricate and install the unit in the steering knuckle. Position the screws (8) and tighten to 140 N·m. Check the correct assembly side of the seal (3).

⚠CAUTION

Use only new screws pre-treated with Driloc locking adhesive. Threads must be cleaned from oil. Degrease only non pre-treated threads.

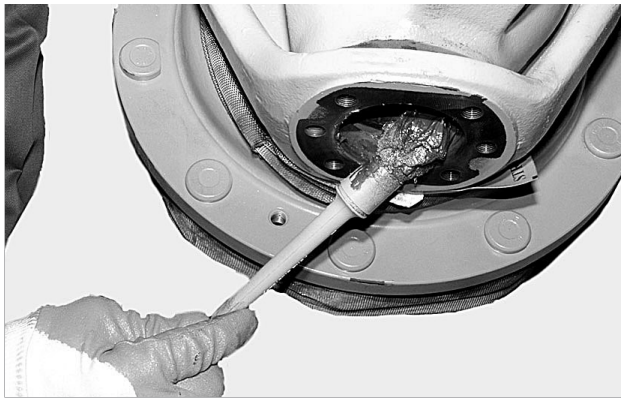

FIGURE 8: Lubricate the unit and the steering knuckle.

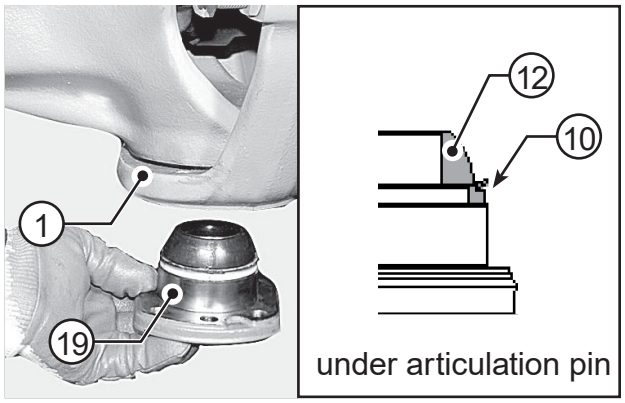

FIGURE 9: Fit the unit (19) in the steering knuckle (1). Position the screws (15) and tighten securely.
Check for the correct assembly side of the seal (10).

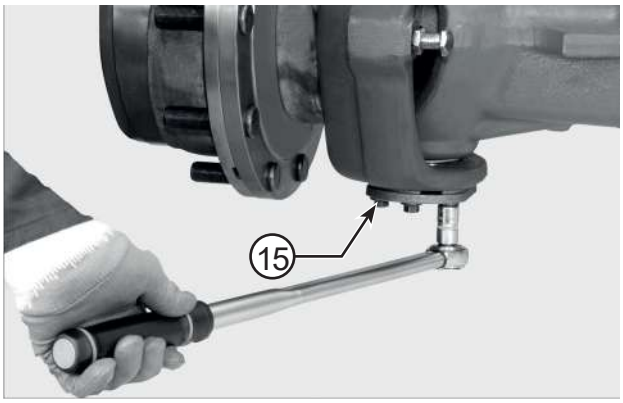

FIGURE 10: Tighten the new capscrews (15) of the top and bottom knuckle posts in sequence using the criss-cross method.
Torque wrench setting: 140 N·m

⚠CAUTION

Use only new screws pre-treated with Driloc locking adhesive. Threads must be cleaned from oil. Degrease only non pre-treated threads.

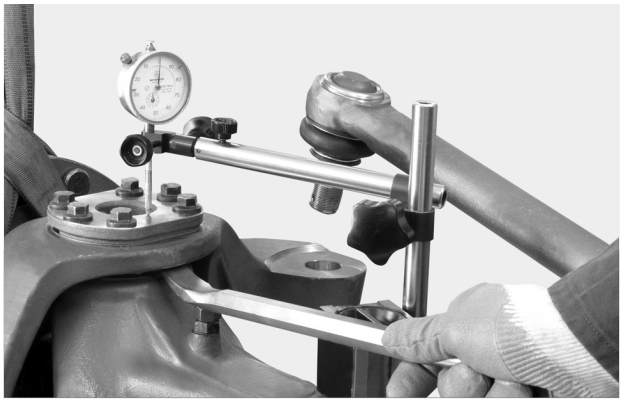

FIGURE 11: Using a lever, check that there is no vertical gap.

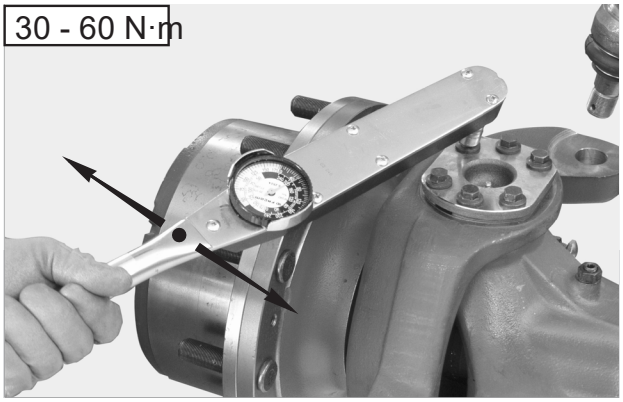

FIGURE 12: Check the torque of the pins, which has to be between 30 and 60 N·m.
If the preliminary measured value is too high, the shims have to be increased.

STEERING CYLINDER

EXPLODED VIEW

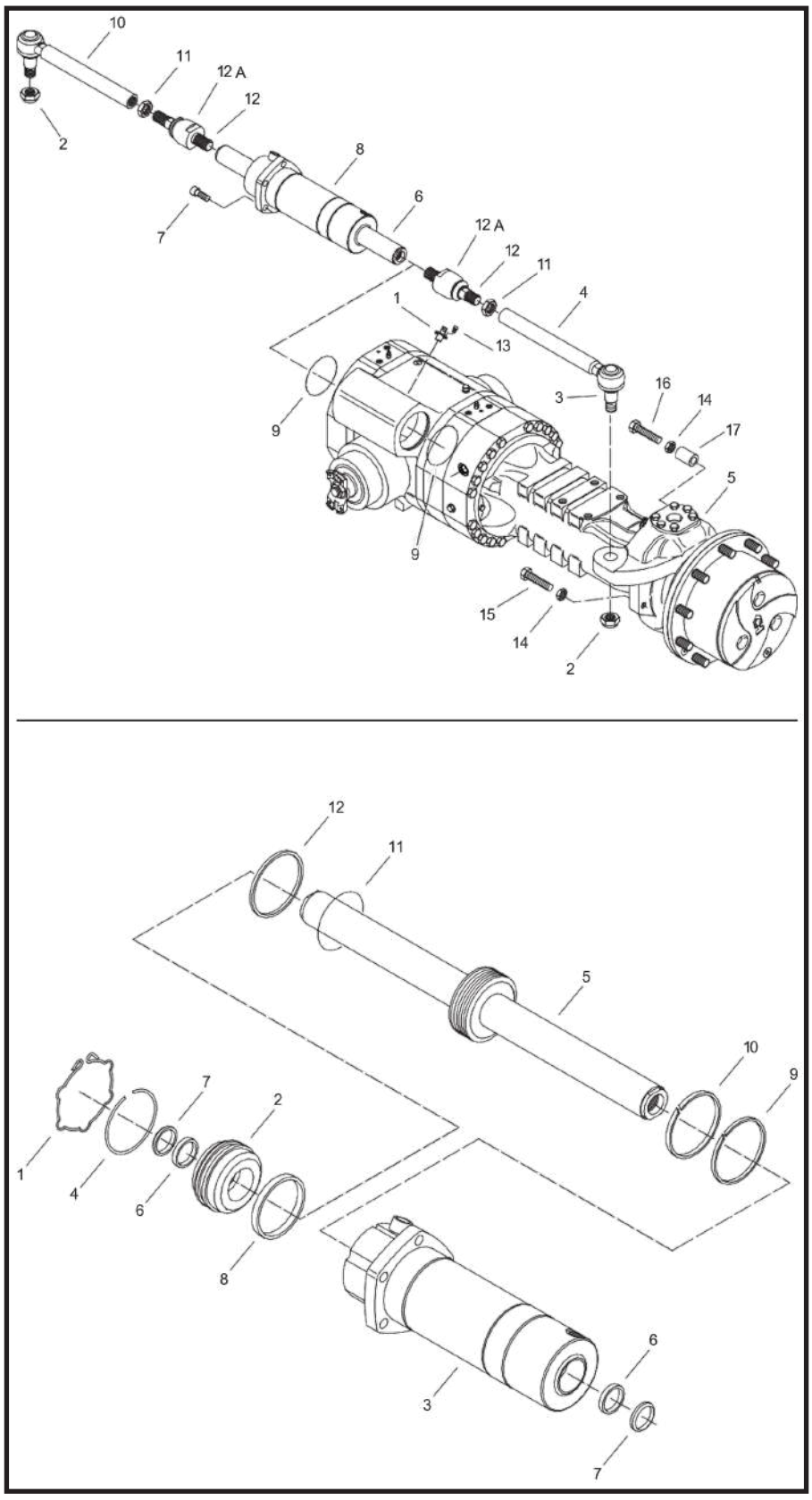

DISASSEMBLY

⚠CAUTION

Before draining oil, release the internal pressure, for details see OIL DRAINING MANDATORY PROCEDURE p. 14.

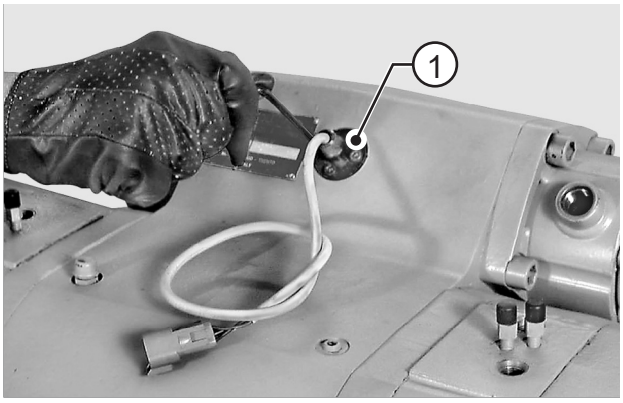

FIGURE 1: If required, remove the steering piston stroke centering sensor (1).

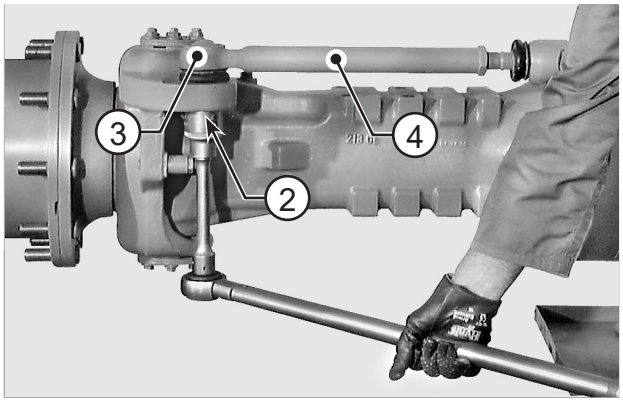

FIGURE 2: Loosen the check nuts (2) on the joints (3) of the steering bars (4). Remove nuts.

NOTE:

Should the joint rotate, hold it with a wrench inserted in the seat provided.

⚠CAUTION

The self-locking nuts (2) must be replaced once every 5 disassemblies.

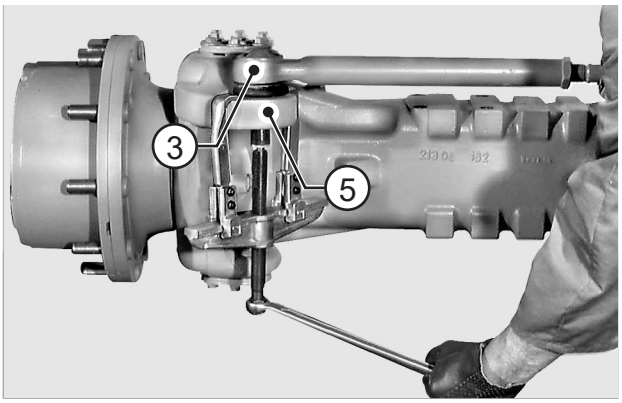

FIGURE 3: Using a puller, disconnect the tapered pins of the joints (3) from the steering knuckles (5).

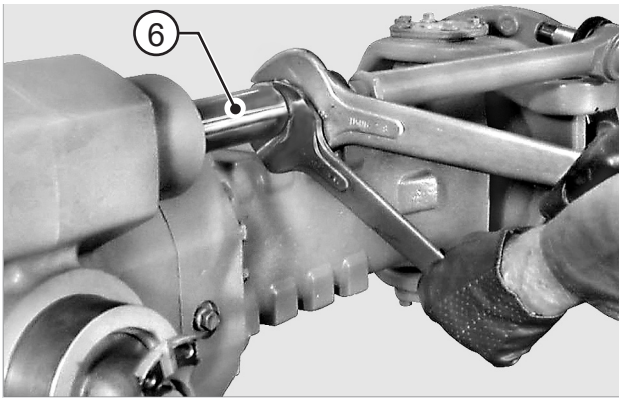

FIGURE 4: Disconnect left and right steering bars from piston (6).

⚠CAUTION

To ease bar removal, heat the threaded portion of the piston to approximately 212 °F [100 °C] with a heat gun.

FIGURE 5: ONLY FOR HEAVY DUTY Cylinder capscrews are on opposite light duty version side.

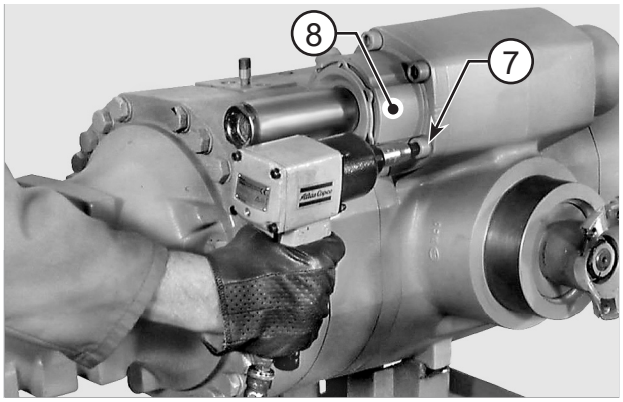

FIGURE 6: Loosen and remove the steering cylinder (8) screws (7).

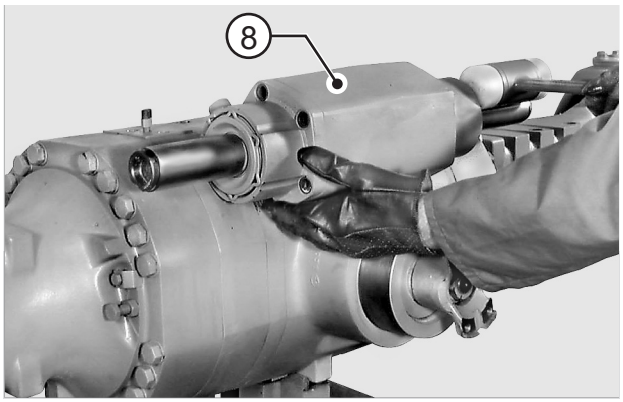

FIGURE 7: Extract the steering cylinder (8) using a plastic hammer.

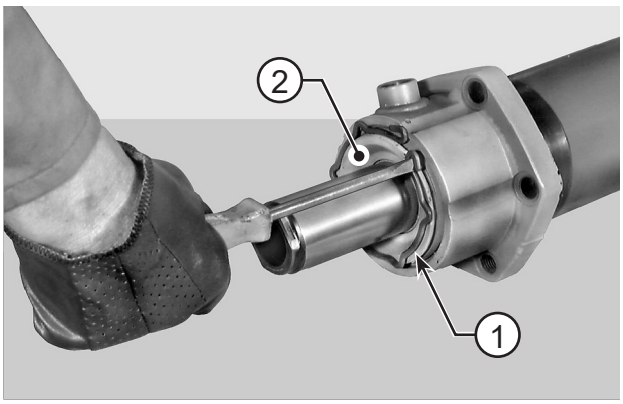

FIGURE 8: Before attempting to disassemble the unit, drain the oil in the cylinder chambers completely. Using a screwdriver, remove the snap ring (1) of the cylinder head (2).

⚠WARNING

Removal of the snap rings can cause personal injuries. You must wear appropriate safety equipment. To avoid injury to eyes, wear eye protection equipment.

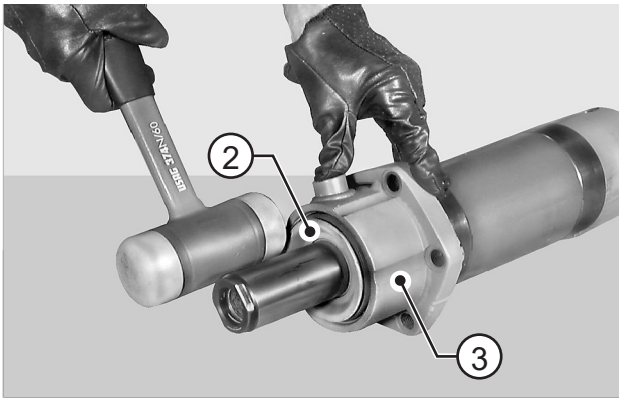

FIGURE 9: Lightly tap the cylinder head (2) with a plastic hammer to push it inside the cylinder (3).

NOTE:

Insert the cylinder head so it is flush with the cylinder.

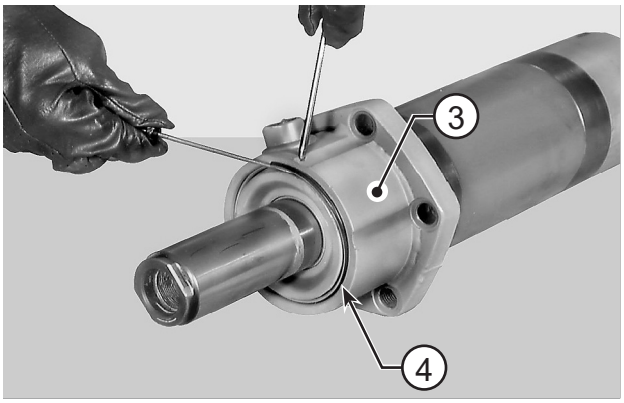

FIGURE 10: Using a punch, force the stop ring (4) located inside the cylinder (3) and extract ring using a screwdriver.

⚠WARNING

Removal of the snap rings can cause personal injuries. You must wear appropriate safety equipment. To avoid injury to eyes, wear eye protection equipment.

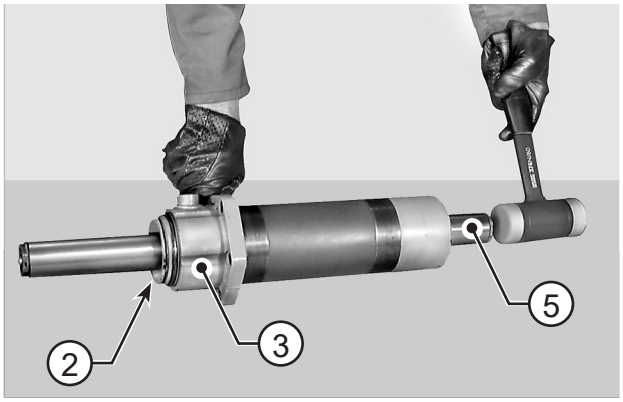

FIGURE 11: Using a plastic hammer, hammer the piston (5) so it strikes against the head (2).
Continue until the head (2) is ejected from the cylinder (3).

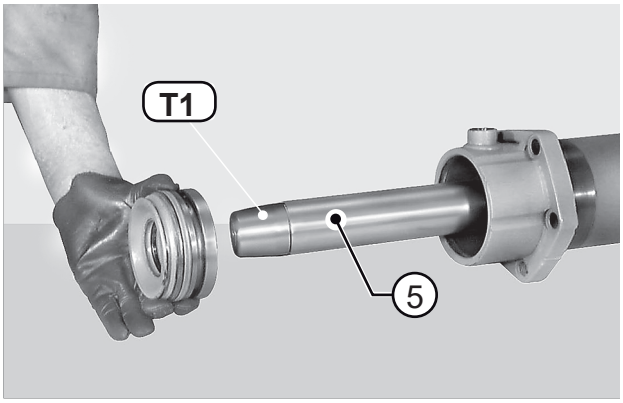

FIGURE 12: Take the cylinder unit (3) apart by extracting the head (2) first, followed by the piston (5).

⚠CAUTION

Write down direction of installation of piston whose seal ring "A" is oriented towards cylinder head (2).

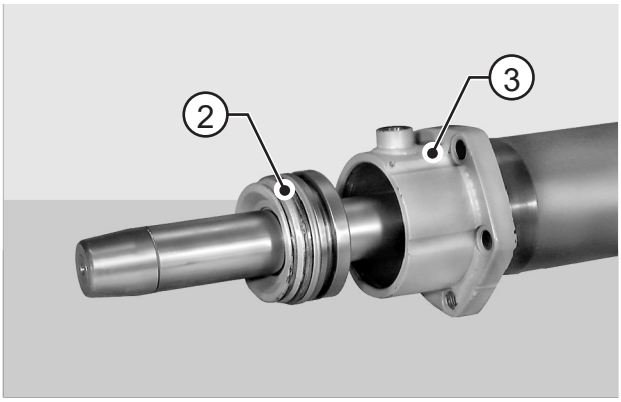

FIGURE 13: Remove all seals, anti-extrusion rings, and scraper rings from head (2), cylinder (3) and piston (5).

NOTE:

1 - All seals must be replaced at each disassembly.
2 - Pay particular attention not to damage seal seats and piston beds.

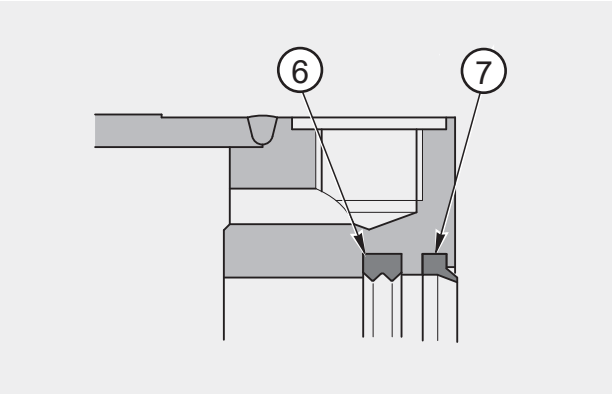

FIGURE 14: Grease and install the piston rod seal ring (6) and scraper ring (7) into cylinder (3).

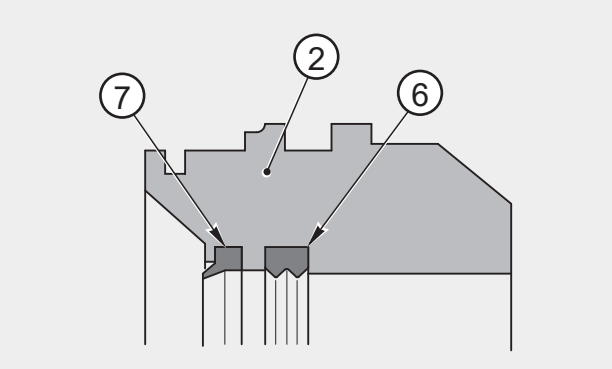

FIGURE 15: Grease and install the piston rod seal ring (6) and scraper ring (7) into the head (2).

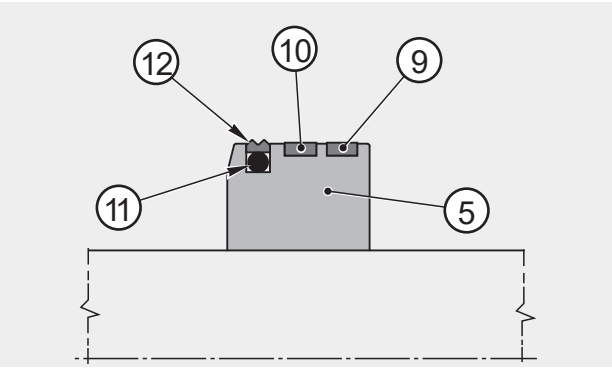

FIGURE 16: Prepare piston (5) by fitting it with guide ring (9), magnetic ring (10), o-ring (11), and seal (12).

⚠CAUTION

1 - To ease installation, lubricate with grease.
2 - If a centering sensor is not required, the magnetic ring 10 can be replaced with an additional guide ring (9).

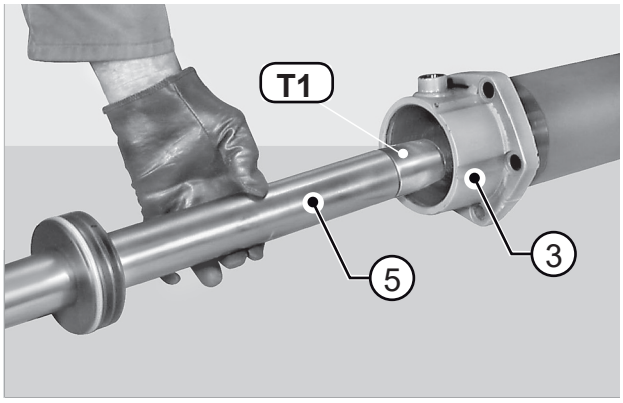

FIGURE 17: Apply tool T1 (See drawing T1 p. 53) to the piston rod on non-head side (2) and center rod into cylinder (3) so as to fit it into piston (5).

NOTE:

Lightly grease seals and cylinder.

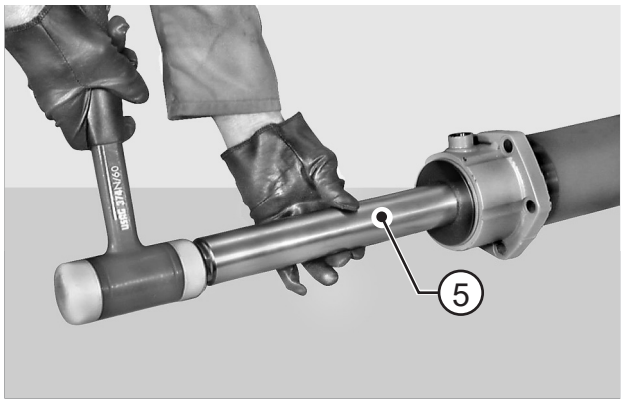

FIGURE 18: Introduce the piston (5) into the cylinder by approximately 150 mm using a plastic hammer.

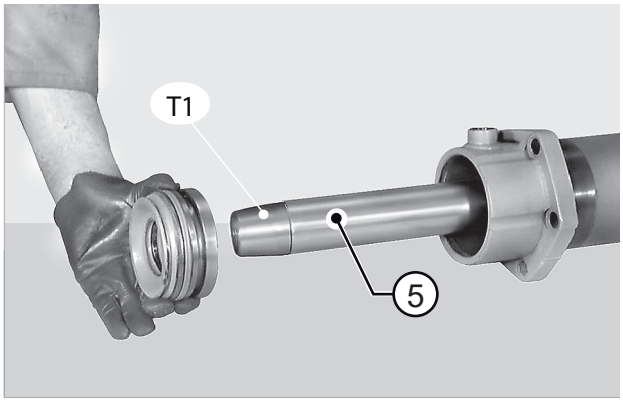

FIGURE 19: Remove tool T1 (See drawing T1 p. 53) and apply it to the opposite side of the piston (5).

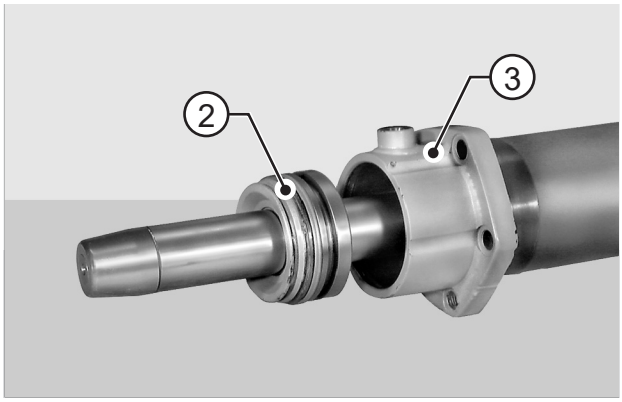

FIGURE 20: Grease the seals of the head (2), slip the head onto the piston and, using a plastic hammer, introduce head into cylinder (3).

NOTE:

Introduce the head so it is flush with the cylinder.

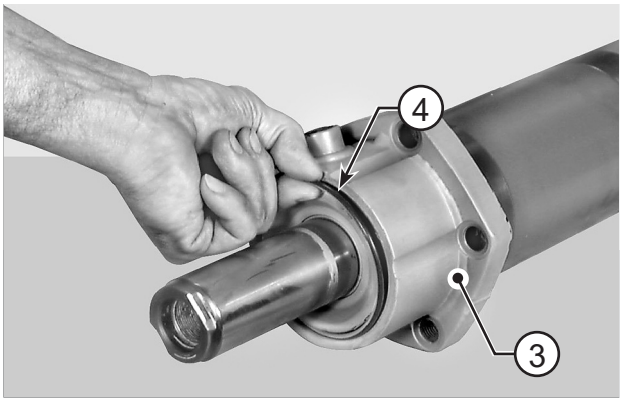

FIGURE 21: Introduce the stop ring (4) and ensure that it sets in the seat of cylinder (3).

⚠WARNING

Personal injury can result when installing snap ring. The appropriate safety equipment must be worn. To avoid injury to your eyes, wear protective glasses during this procedure.

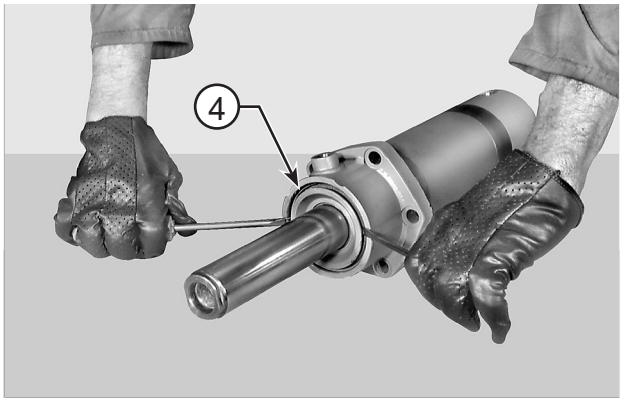

FIGURE 22: Using two screwdrivers or levers, force the head until it is seated against the stop ring (4).

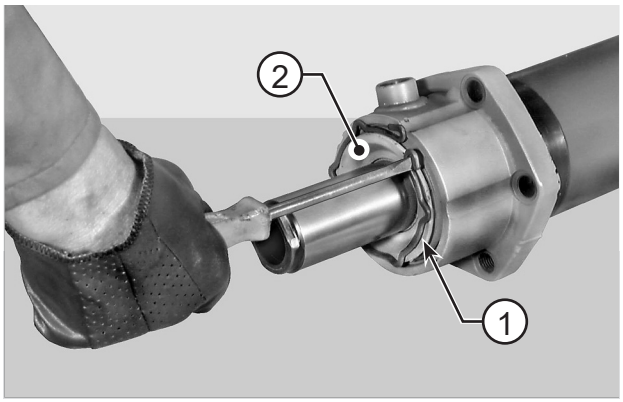

FIGURE 23: Fit the snap ring (1) of head (2). If necessary, force it into the seat with a punch and hammer.

⚠CAUTION

Make sure that the snap ring (1) fits snugly in its seat.

⚠WARNING

Personal injury can result when installing snap ring. The appropriate safety equipment must be worn. To avoid injury to your eyes, wear protective glasses during this procedure.

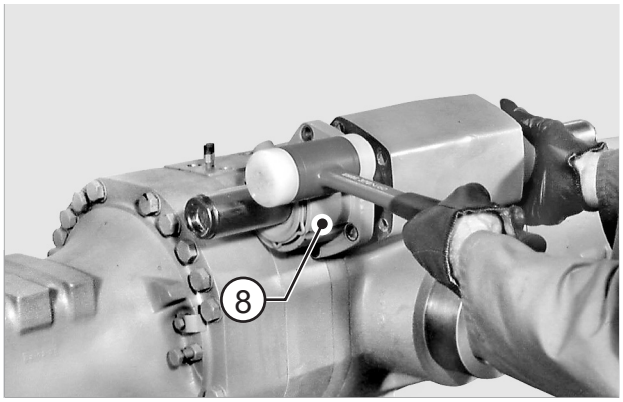

FIGURE 24: Check the condition of the axle unit's o-rings (9). Grease piston seats with Tecnolube Seal 101 and install cylinder using a plastic hammer.

FIGURE 25: ONLY FOR HEAVY DUTY
Cylinder capscrews are on opposite light duty version side.

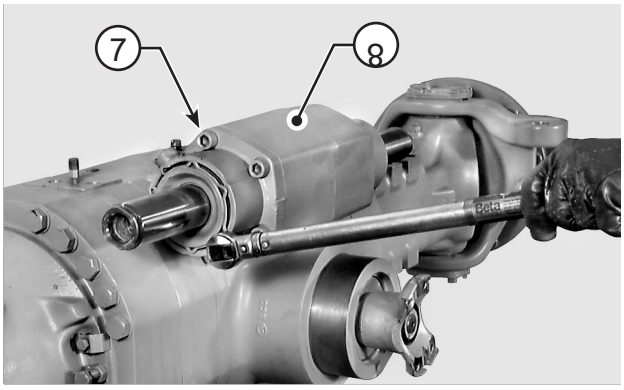

FIGURE 26: Block cylinder (8) with screws (7) coated with Loctite 242 and tightened to a torque of 180 - 200 N·m.

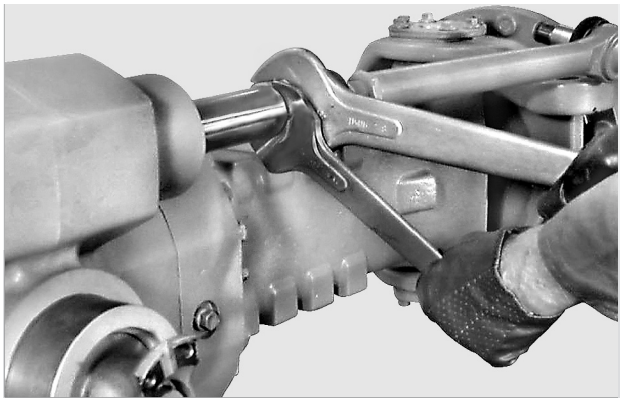

FIGURE 27: Apply Loctite to the threaded portion of the steering bars and connect the bars by tightening the ends in the piston rod.
Tightening torque: 430 - 470 N·m.

⚠CAUTION

Accurately remove grease from the threads using an activator before applying the thread locking compound.

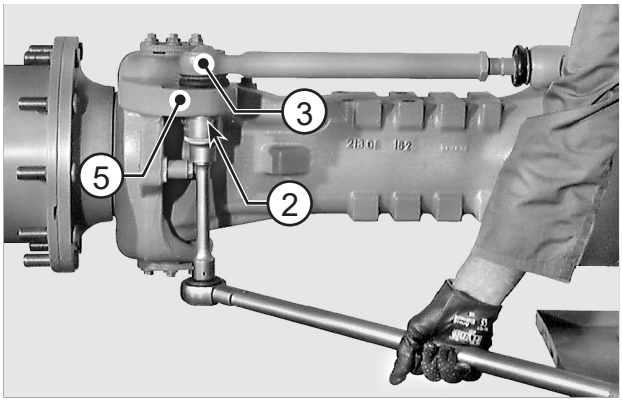

FIGURE 28: Introduce the pins (3) in the steering knuckles (5) and lock into position with nuts (2) tightened to a torque of 350 - 390 N·m.

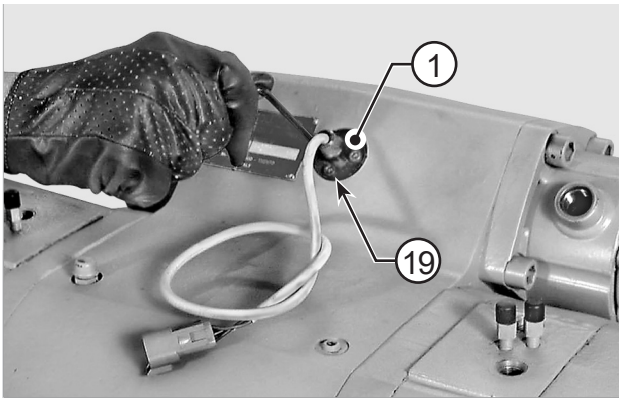

FIGURE 29: If required, install the steering piston stroke centering sensor (1) for checking piston centering and tighten screws (13). Tightening torque: 5 - 6 N·m

⚠CAUTION

If required, eliminate the action of the negative brake.

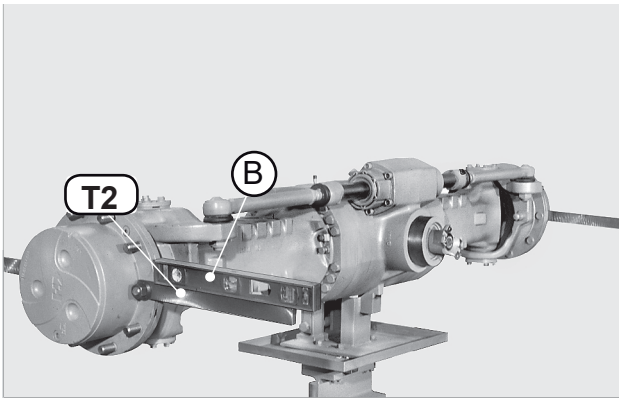

FIGURE 30: Apply tools T2 (See drawing T2 p. 53) onto the wheel hubs and lock tools.
Check that tools are perfectly flat and parallel to each other using a level "B".

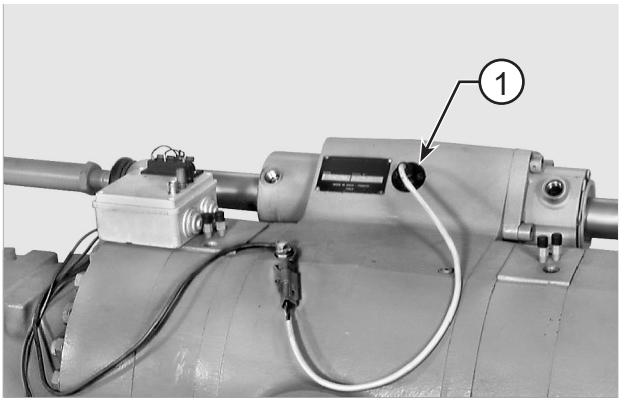

FIGURE 31: Connect the sensor (1) to the control device according to either of the following diagrams.

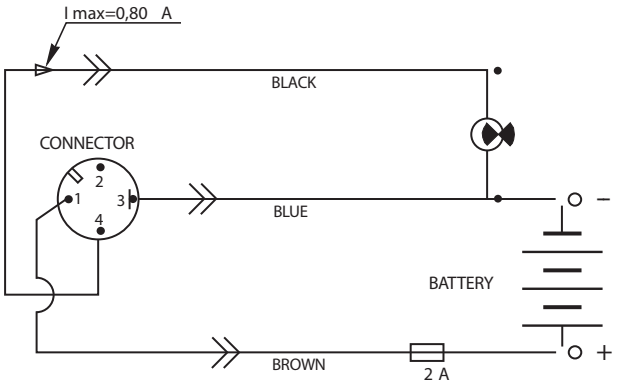

FIGURE 32: Sensor wiring diagram for STANDARD version.

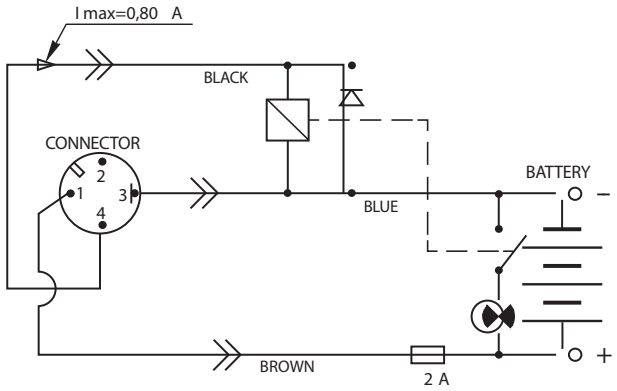

FIGURE 33: Sensor wiring diagram for OPTIONAL version.

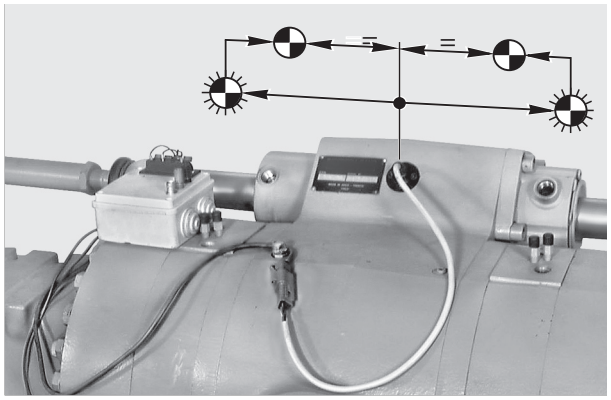

FIGURE 34: Center by slowly moving the piston first in one direction, then in the opposite one, position the piston in the middle point of the stroke, which is determined by the control device signalling lamp turning on and switching off in the reverse stage.

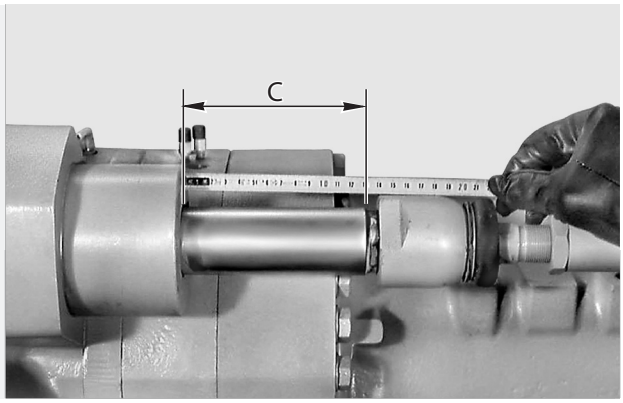

FIGURE 35: Check distance "C" of piston on either of the two sides and write down distance dimension to check subsequent adjustments.

NOTE:

For cylinders without sensors, piston must be centered based on maximum stroke.

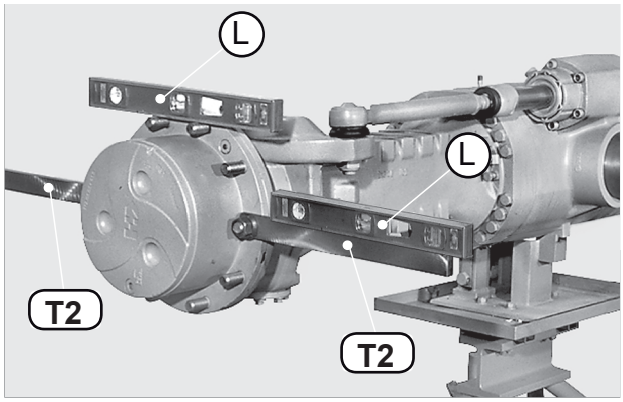

FIGURE 36: Lay level "L" on two upper studs and line them up. Apply tools T2 (See drawing T2 p. 53) to the two horizontal studs; hold them in position with two nuts, level them, and finally lock into position.

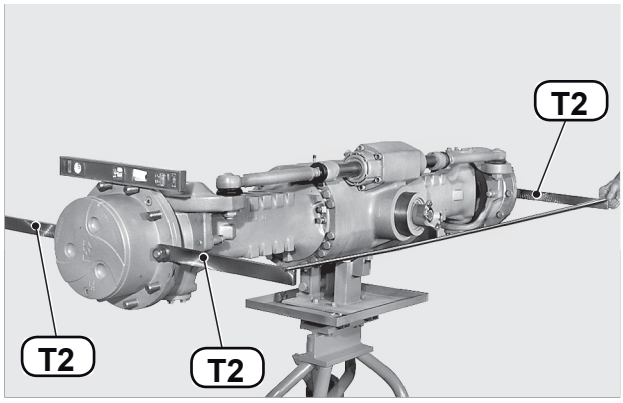

FIGURE 37: Without moving the piston, check front "B" and rear "A" using tool T1 (See drawing T2 p. 53) at "R" value. R = 400 mm (see picture below).

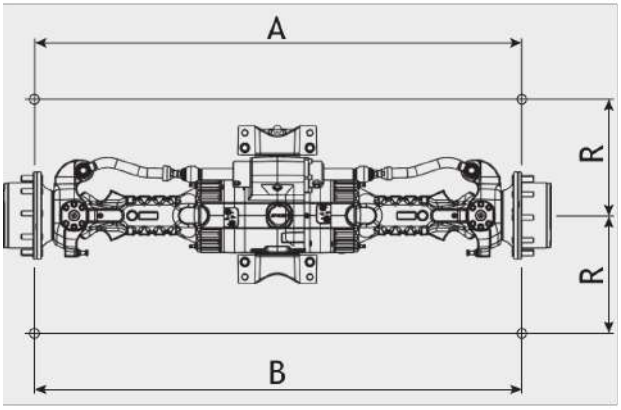

FIGURE 38: Adjust the toe-in with a difference between "A" and "B" of maximum 2,5 mm.
A ± B = 2,5 mm
R = 400 mm

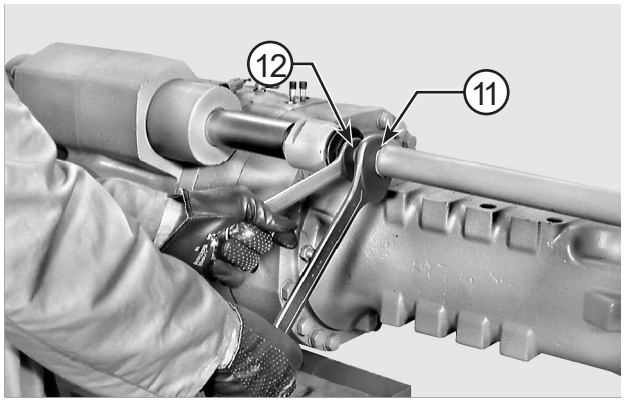

FIGURE 39: TOE-IN
If necessary, adjust alignment after loosening the check nuts (11) of ball pins (12).

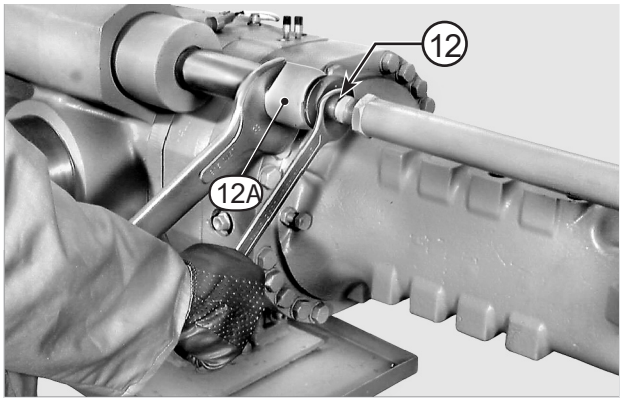

FIGURE 40: Hold joints (12A) tighten and rotate the ball pins (12) until tools T2 (See drawing T2 p. 53) become parallel to each other.

NOTE:

1 - Loosen the nuts by a few turns.

2 - Half a turn of the pin will reduce the front stud by about 3 mm and increase the rear one by about 3 mm.

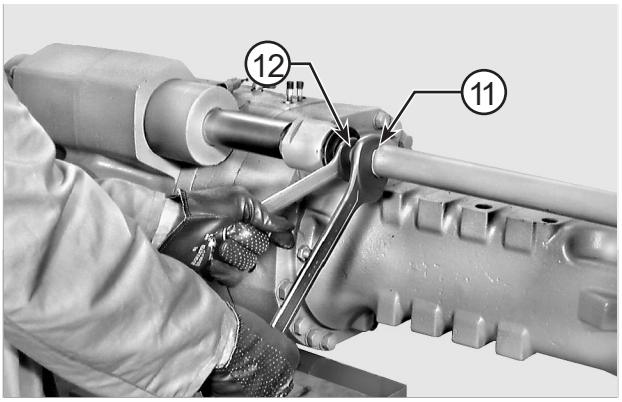

FIGURE 41: Once toe-in has been adjusted, lock nuts (11). Tightening torque for nuts: 328 - 363 N·m.

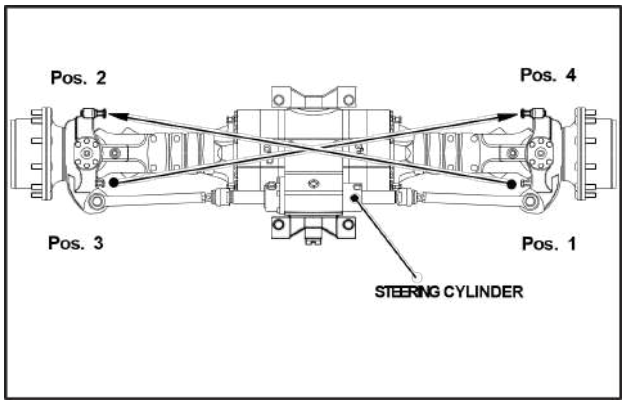

FIGURE 42: ADJUSTING THE STEERING ANGLE
Loosen the nut of one of the adjusting screws on cylinder side.

NOTE:

Perform the same operations on both sides (see diagram).

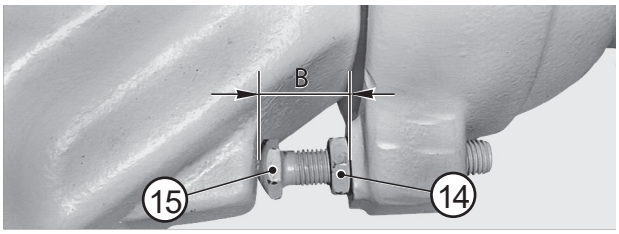

FIGURE 43: Adjust the "B" distance of the screw according to required data setting.
Lock into position with nut tightened to 145 - 148 N·m.

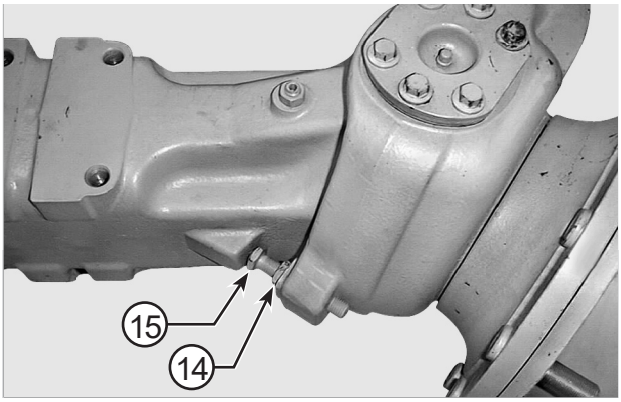

FIGURE 44: Perform one full steering operation until the adjusted screw (15) leans against the arm stop.

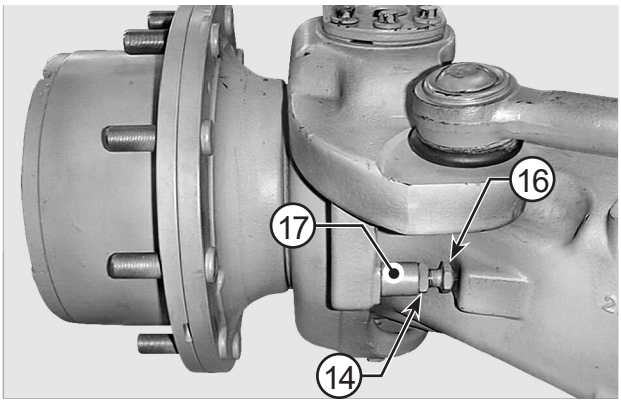

FIGURE 45: While holding the adjustment screw in position against the arm stop, adjust the screw opposite (16), on non-cylinder side, until it leans against the arm stop.

⚠CAUTION

The screws (15, 16) must lean against the respective arm stops all at the same time.

SPECIAL TOOLS

T1

P/N: 2368

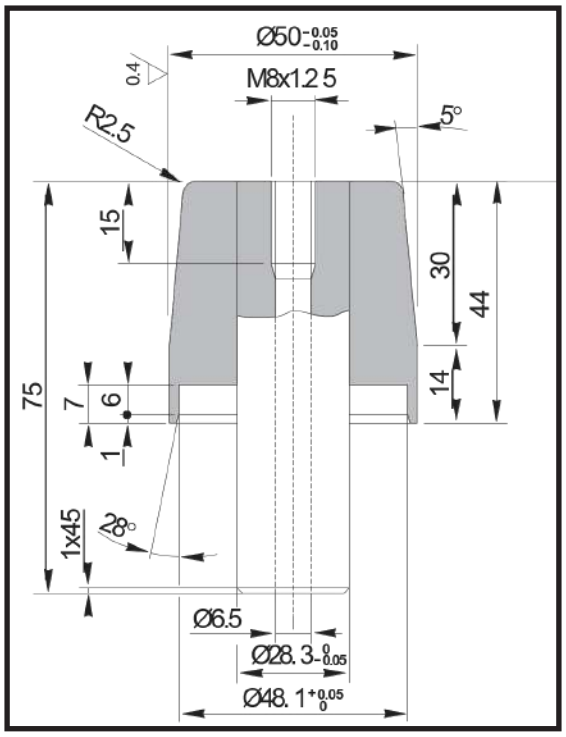

T2

P/N: 2367

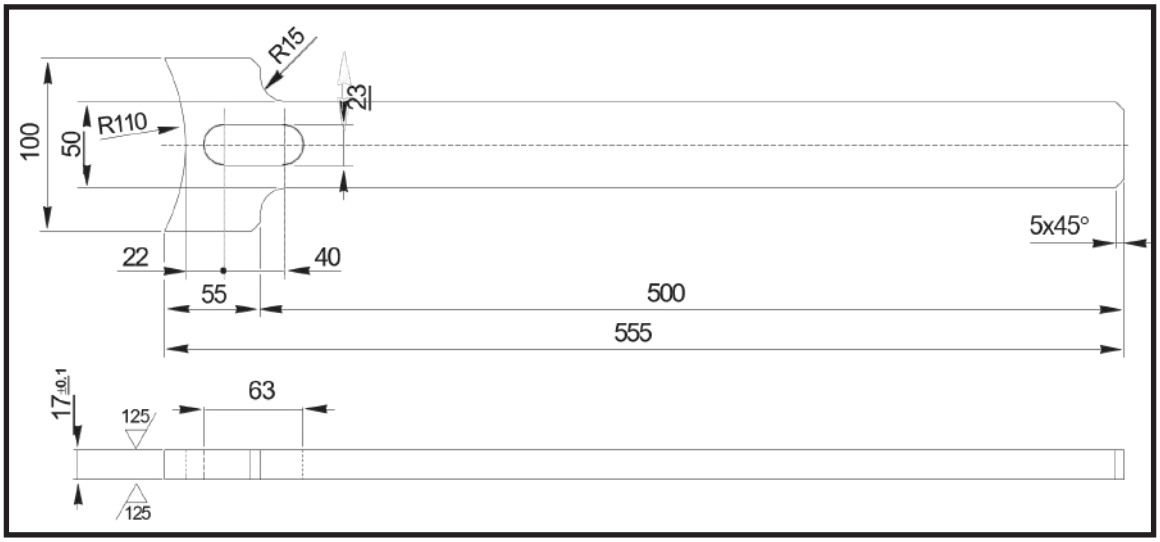

U-JOINT

EXPLODED VIEW

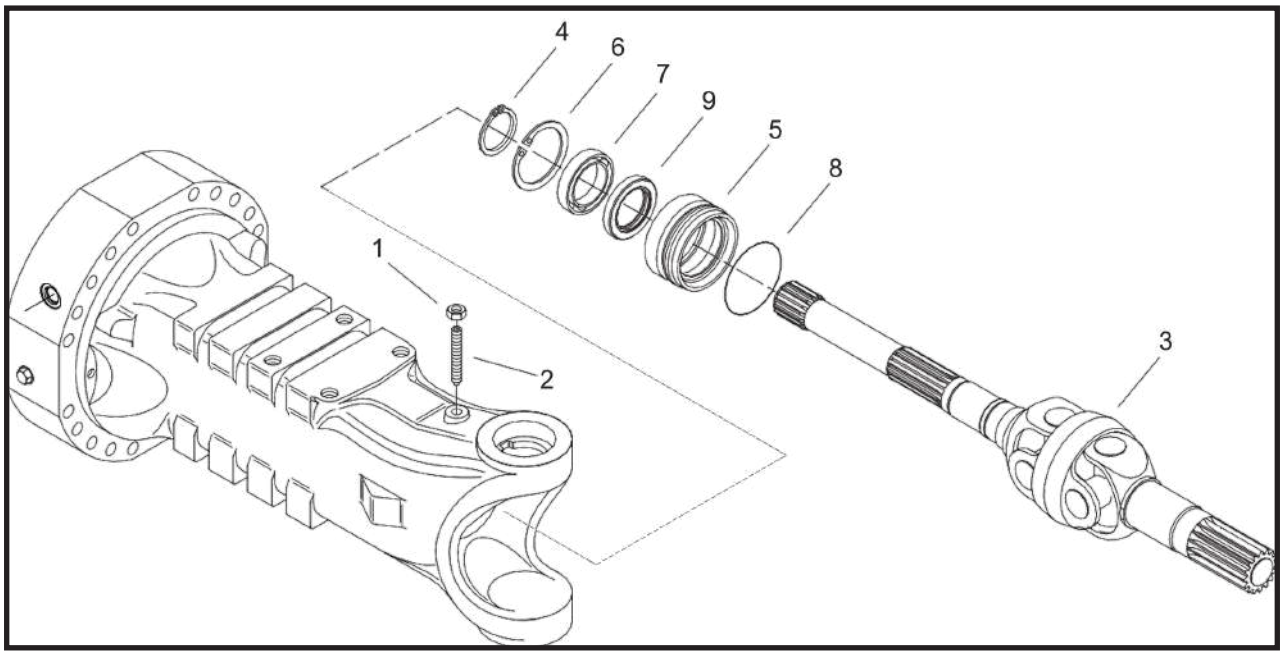

DISASSEMBLY

⚠CAUTION

Before draining oil, release the internal pressure, for details see OIL DRAINING MANDATORY PROCEDURE p. 14.

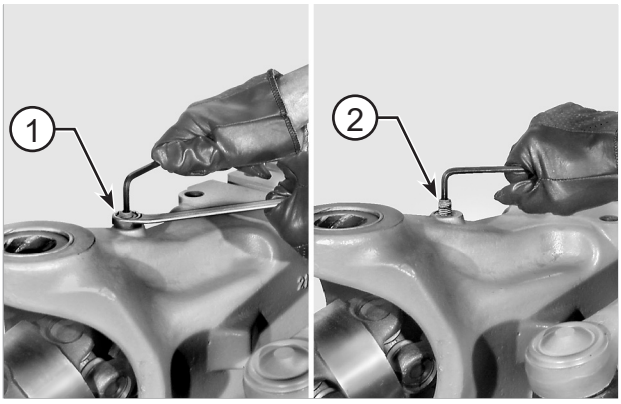

FIGURE 1: Loosen and remove the check nut (1) of the stud (2). Remove stud (2).

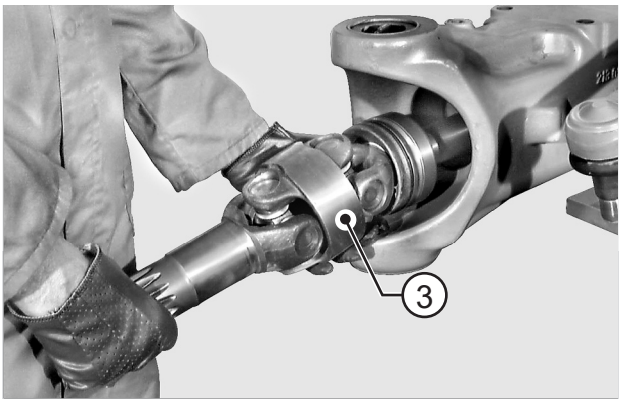

FIGURE 2: Extract the whole twin u-joint (3).

NOTE:

If necessary, use a plastic hammer or lever to ease extraction of the twin u-joint.

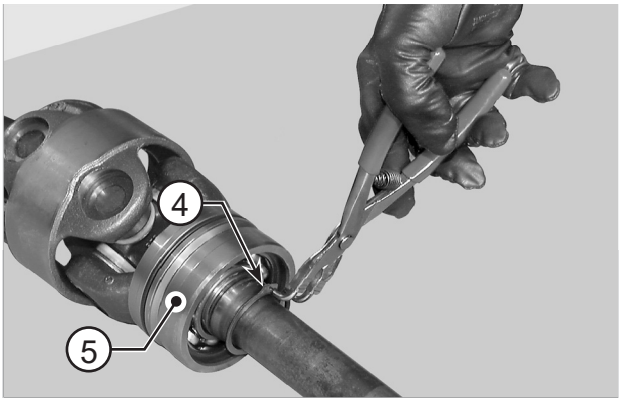

FIGURE 3: Remove the snap ring (4) of the bushing kit (5).

⚠CAUTION

MANDATORY PROCEDURE
Set the pliers following the correct procedure shown in END-STOP PLIER SETTING p. 15.

⚠WARNING

Removal of the snap rings can cause personal injuries. You must wear appropriate safety equipment. To avoid injury to eyes, wear eye protection equipment.

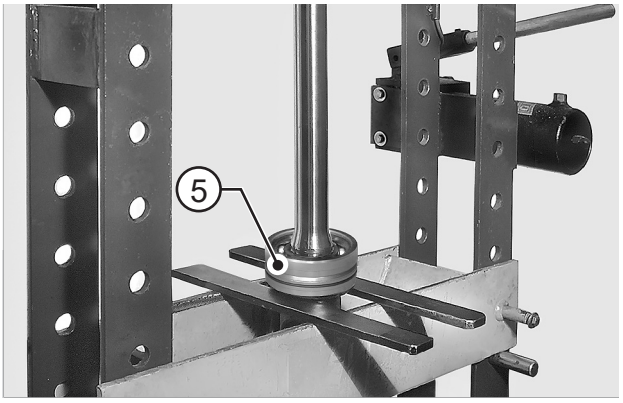

FIGURE 4: Place the u-joint under a press and remove the complete bushing (5).

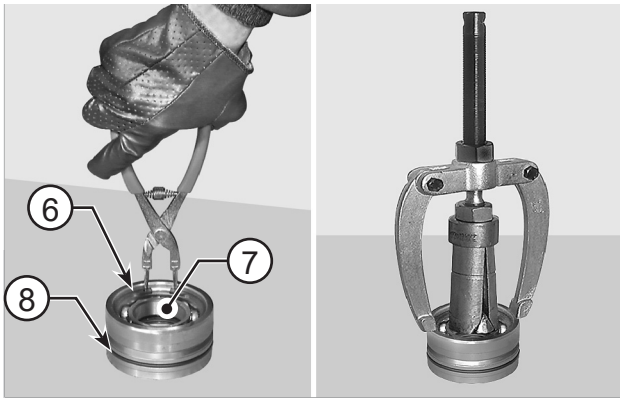

FIGURE 5: Remove the bearing (7) snap ring (6). Remove the o-ring (8) and, using a puller for inner parts, remove the bearing (7) and seal ring (9).

⚠CAUTION

MANDATORY PROCEDURE
Set the pliers following the correct procedure shown in END-STOP PLIER SETTING p. 15.

⚠WARNING

Removal of the snap rings can cause personal injuries. You must wear appropriate safety equipment. To avoid injury to eyes, wear eye protection equipment.

NOTE:

Write down direction of installation of seal ring.

ASSEMBLY

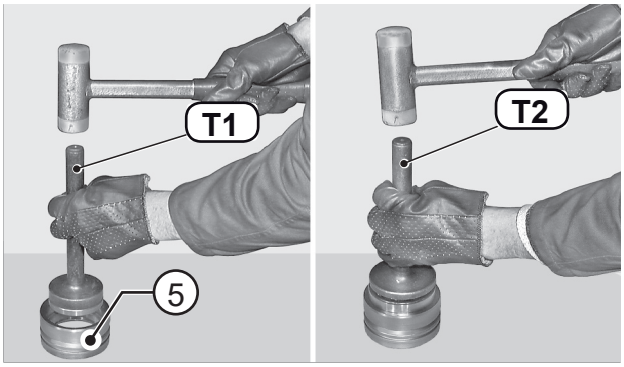

FIGURE 6: Using tools T1 (See drawing T1 p. 60) and T2 (See drawing T2 p. 60), introduce the seal ring (9) and bearing (7) into the bushing (5).

NOTE:

Check direction of installation of seal (9) carefully.

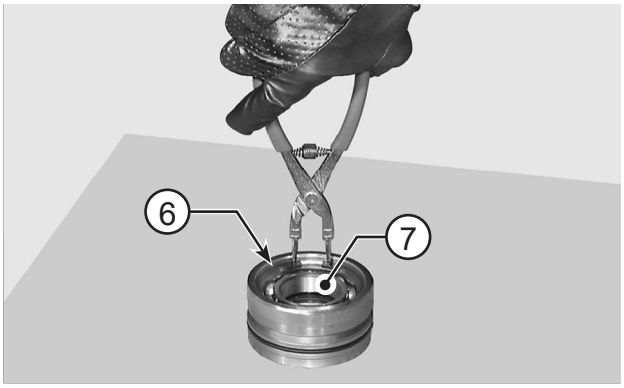

FIGURE 7: Install the bearing (7) snap ring (6).

⚠CAUTION

MANDATORY PROCEDURE
Set the pliers following the correct procedure shown in END-STOP PLIER SETTING p. 15.

⚠WARNING

Personal injury can result when installing snap ring. The appropriate safety equipment must be worn. To avoid injury to your eyes, wear protective glasses during this procedure.

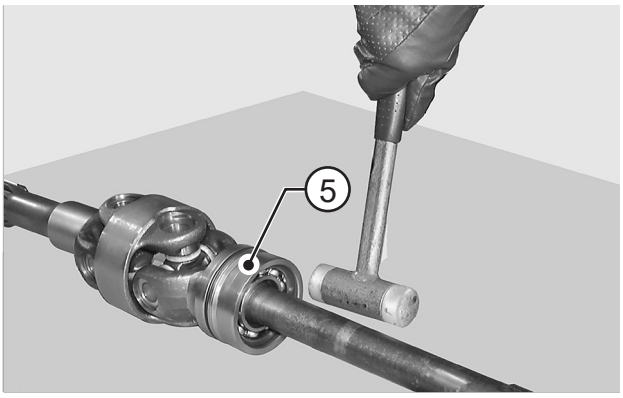

FIGURE 8: Install the complete bushing (5) onto the twin ujoint and set bushing into position with a plastic hammer.

⚠CAUTION

Tap around the whole rim.

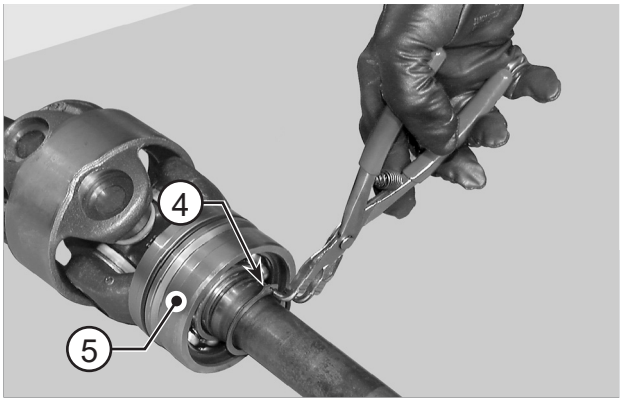

FIGURE 9: Install the bushing (5) snap ring (4); position the oring (8) as well.

⚠CAUTION

MANDATORY PROCEDURE
Set the pliers following the correct procedure shown in END-STOP PLIER SETTING p. 15.

⚠WARNING

Personal injury can result when installing snap ring. The appropriate safety equipment must be worn. To avoid injury to your eyes, wear protective glasses during this procedure.

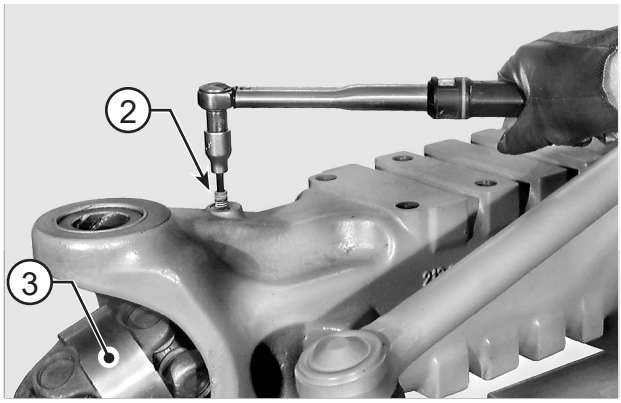

FIGURE 10: Introduce the twin U-joint (3) into the arm and lock into position with stud (2) coated with Loctite 242.
Tighten stud to a maximum torque of 15 N·m.

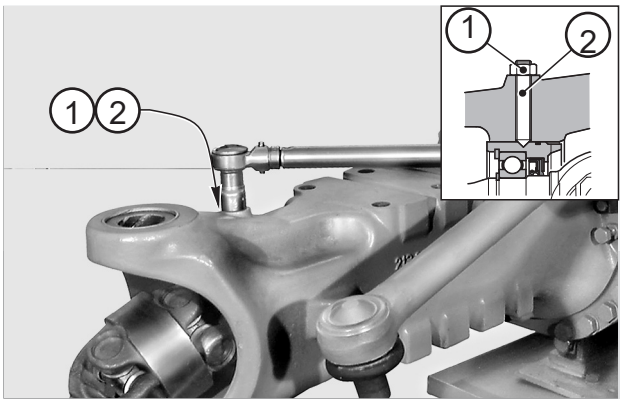

FIGURE 11: Apply Loctite 242 to the stud (2) and tighten nut (1).
Tighten nut (1) to a torque of 60 - 70 N·m while holding stud (2) in position.

SPECIAL TOOLS

T1

P/N: 3342

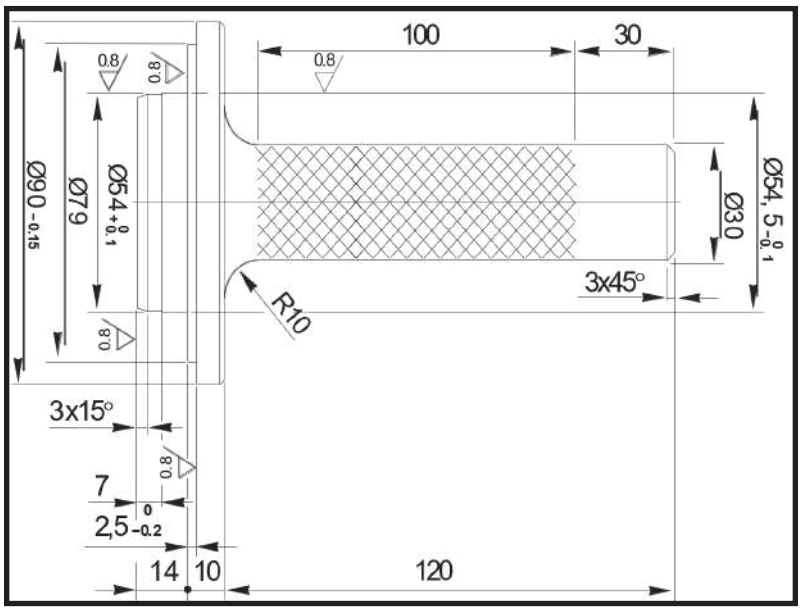

T2

P/N: 2301

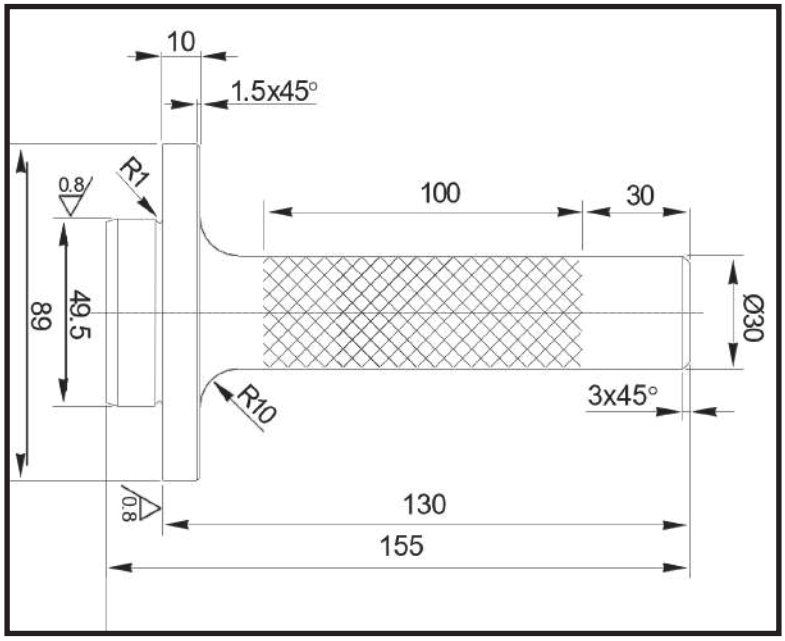

BRAKE WEAR CHECK PROCEDURE

OLD VERSION

⚠CAUTION

Perform all operations on both arms.

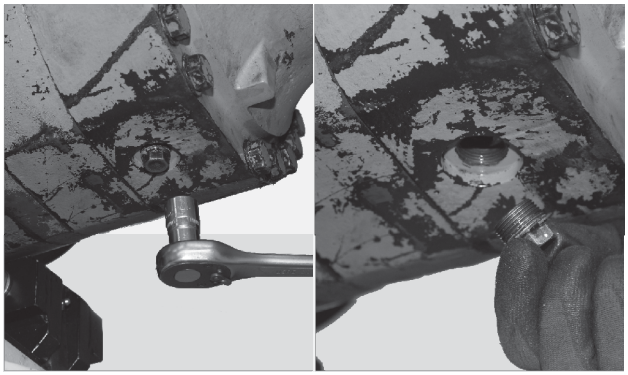

FIGURE 1: Remove the oil drain plug and discharge oil.

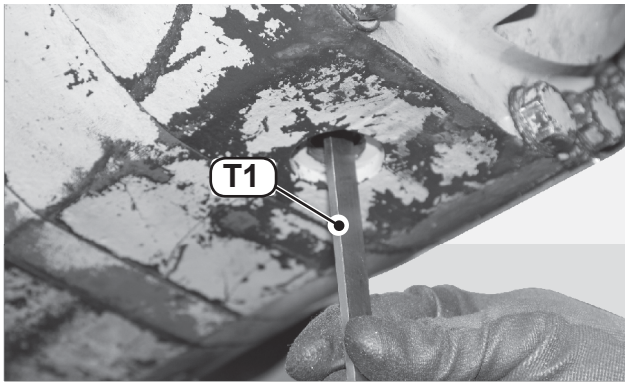

FIGURE 2: Apply the parking brake (or have someone hold the service brake) and with either brake applied, check the distance between discs using tool T1 (See drawing T1 p. 63). Minimum distance: 5,2 mm

⚠CAUTION

Replace the braking disks and the intermediate disks on both sides if necessary. See SERVICE BRAKE AND NEGATIVE PARKING BRAKE p. 65.

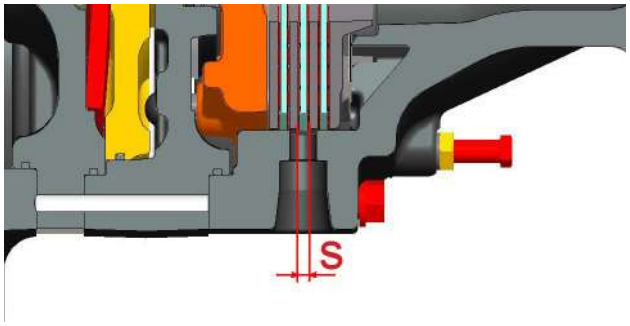

FIGURE 3: Checking brake distance with the T1 go / no-go gauge.

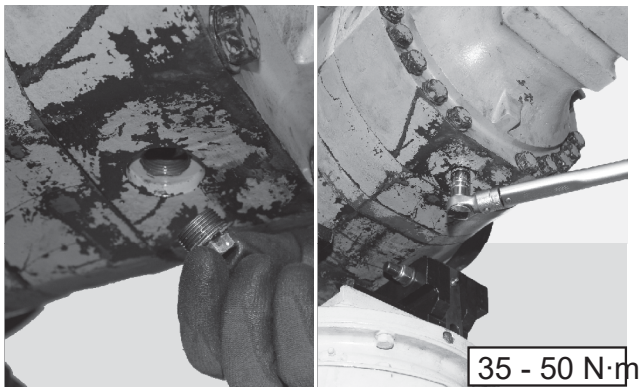

FIGURE 4: Install the oil drain plug. Torque wrench setting for screws: 35 - 50 N·m. Fill with oil.

NEW VERSION

⚠CAUTION

Perform all operations on both arms.

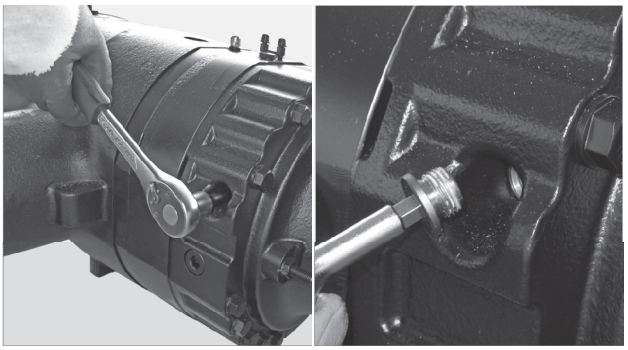

FIGURE 1: Remove the inspection plug.

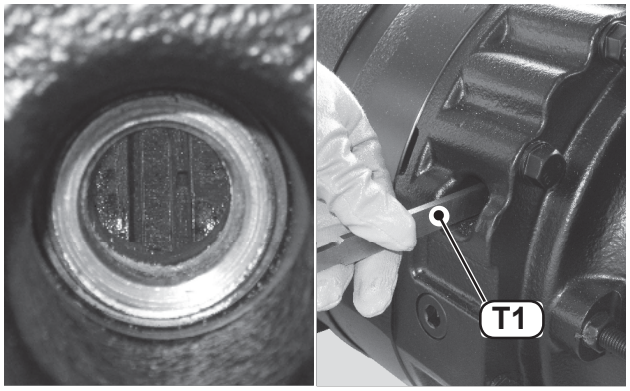

FIGURE 2: Apply the parking brake (or have someone hold the service brake) and with either brake applied, check the distance between discs using tool T1 (See drawing T1 p. 63). Minimum distance: 5,2 mm

⚠CAUTION

Replace the braking disks and the intermediate disks on both sides if necessary. See SERVICE BRAKE AND NEGATIVE PARKING BRAKE p. 65.

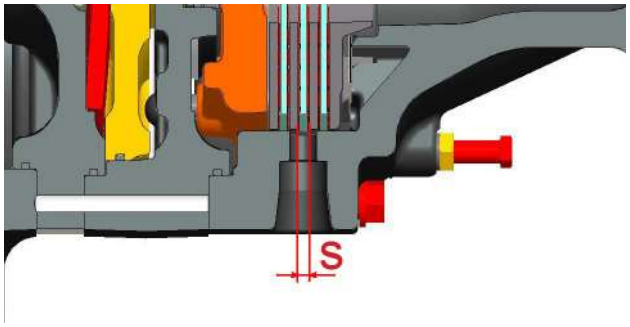

FIGURE 3: Checking brake distance with the T1 go / no-go gauge.

FIGURE 4: Install the inspection plug. Torque wrench setting for screws: 35 - 50 N·m.

SPECIAL TOOLS

T1

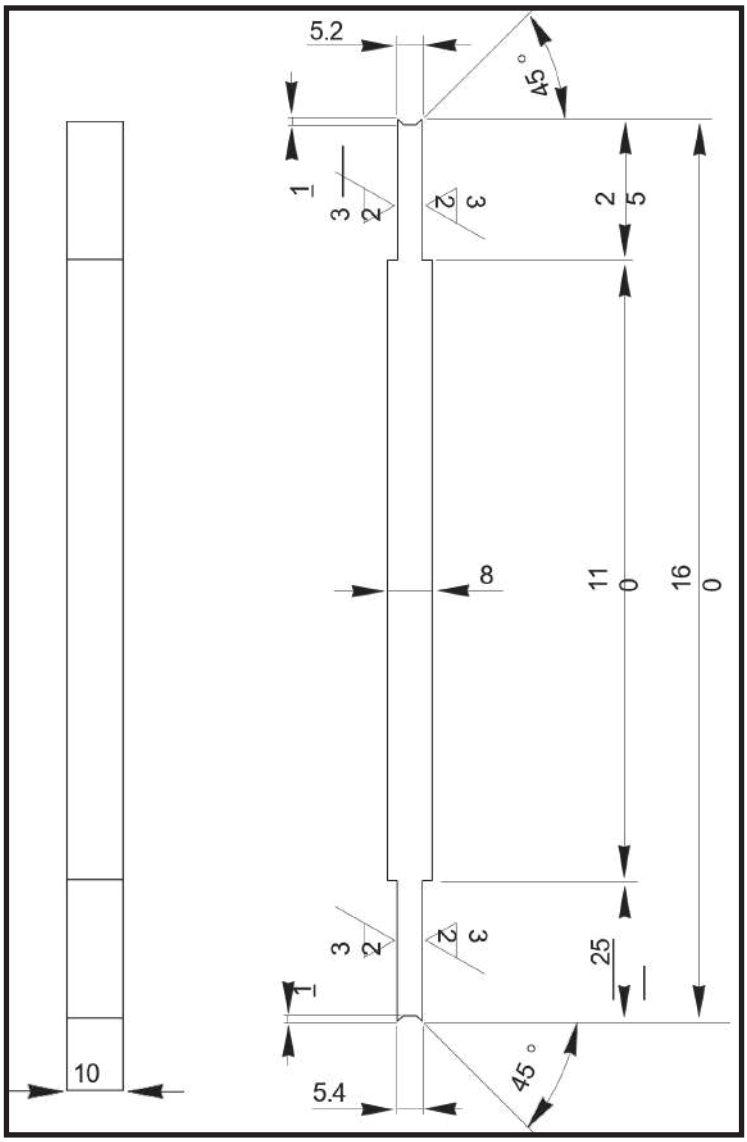

SERVICE BRAKE AND NEGATIVE PARKING BRAKE

EXPLODED VIEW

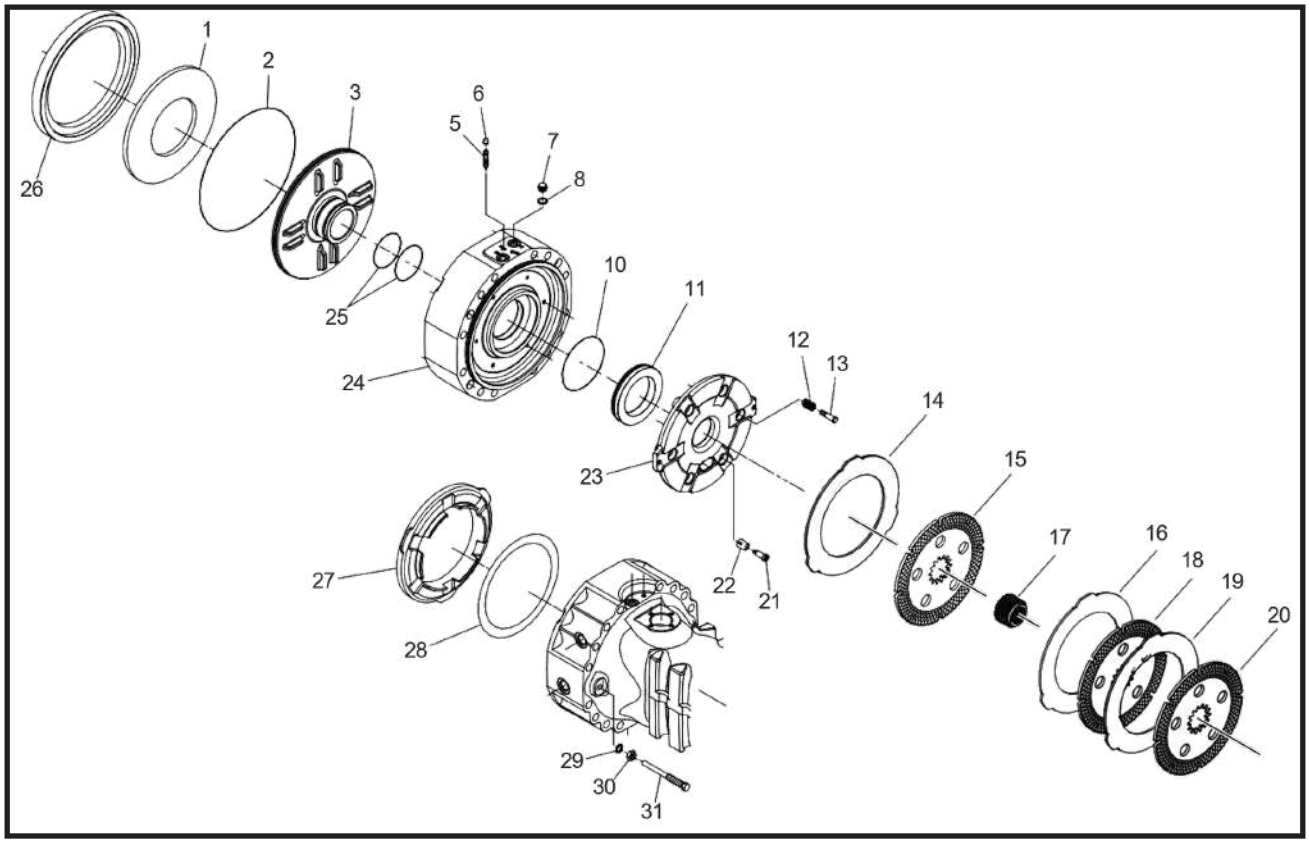

⚠ DANGER

Before maintaining brakes, when the axle is installed on the vehicle, follow all safety instructions in the Original Equipment Manufacturer (OEM) manual that came with the vehicle.

⚠ CAUTION

Before draining oil, release the internal pressure, for details see OIL DRAINING MANDATORY PROCEDURE p. 14.

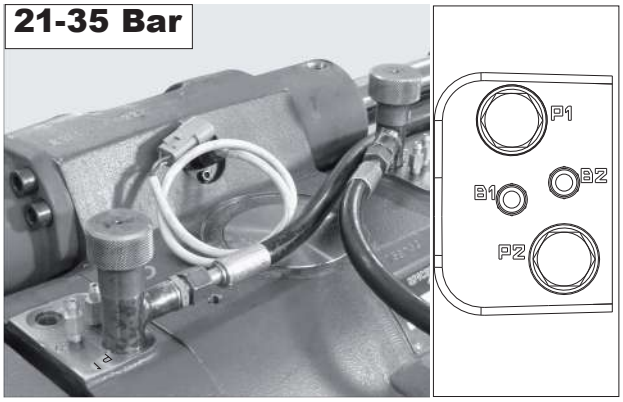

FIGURE 1: Connect an external pump to the union piece "P1" of the negative brake and introduce a pressure of 21 - 35 bar to eliminate the pressure of the Belleville washers (1).

⚠ DANGER

Always check that the hydraulic circuit test for leaks under pressure. Always use a cardboard or a panel to control the loss.

A leak from a hole of the size of a pin can cause serious injury. If fluid is injected into the skin it is necessary to seek immediate medical care.

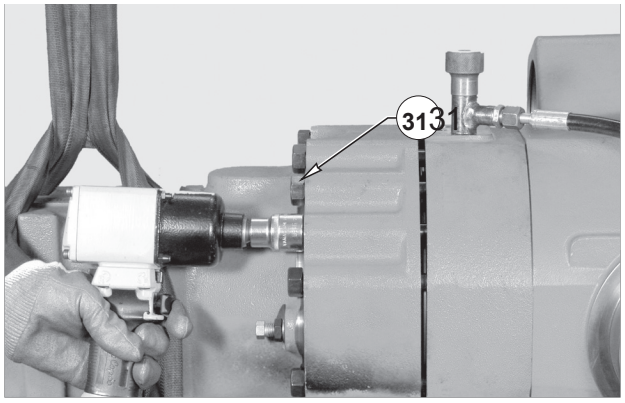

FIGURE 2: Sling the arm to be removed and connect it to a hoist.
Loosen and remove screws (31).

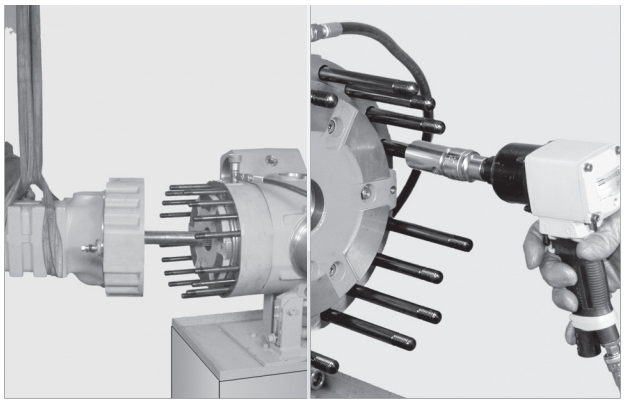

FIGURE 3: Remove arm together with brakes and axle shafts; lay down the arm vertically.

FIGURE 4: Gradually release the pressure in the braking circuit, bringing it to zero through the external pump.

⚠ DANGER

Do not remove any part of the hydraulic circuit without having completely released the hydraulic pressure.

The removal of pressurized parts or loss caused from releasing these components can cause serious injuries and even death. A leak from a hole of the size of a pin can cause serious injury. If fluid is injected into the skin it is necessary to seek immediate medical care.

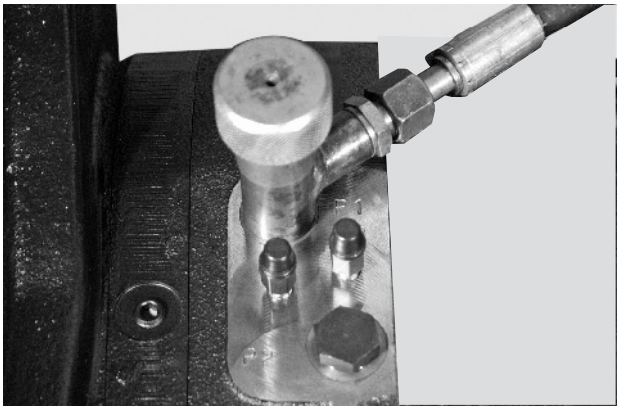

FIGURE 5: Gradually loosen the sleeve and remove.

⚠ DANGER

Carefully check that the hydraulic pressure is discharged completely before removing the external pump sleeve connected to the brake.

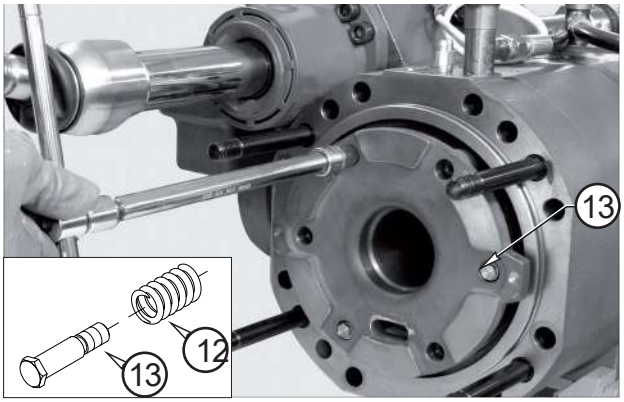

FIGURE 6: Remove the adjusting screws (13) from the counterwasher (23).

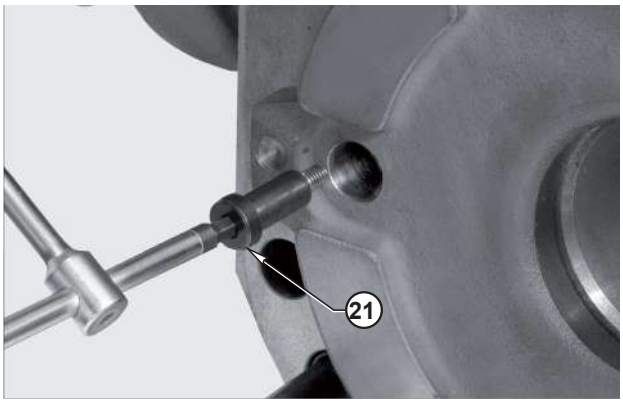

FIGURE 7: Remove the pin screws (21).

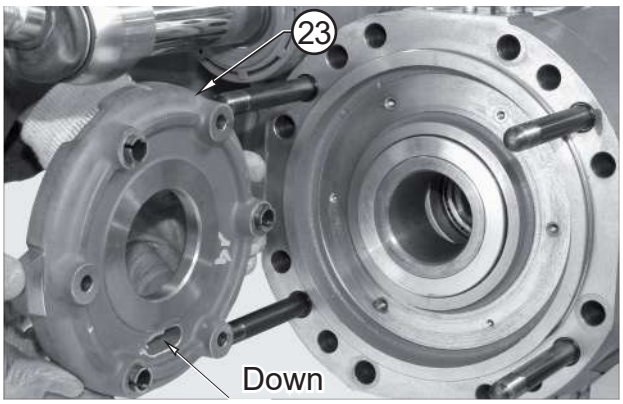

FIGURE 8: Write down their order of assembly and remove the counterwasher (23).

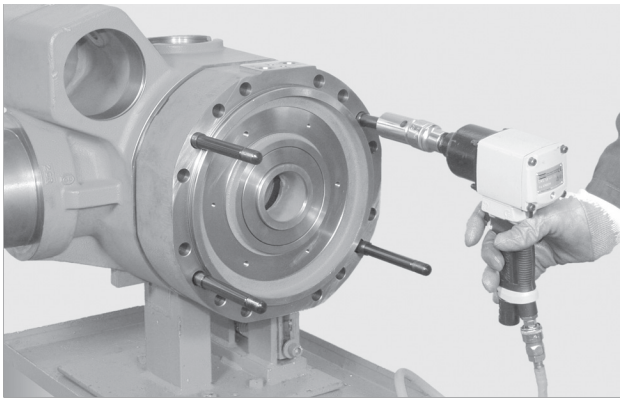

FIGURE 9: Loosen the studs in an alternate method and remove them.

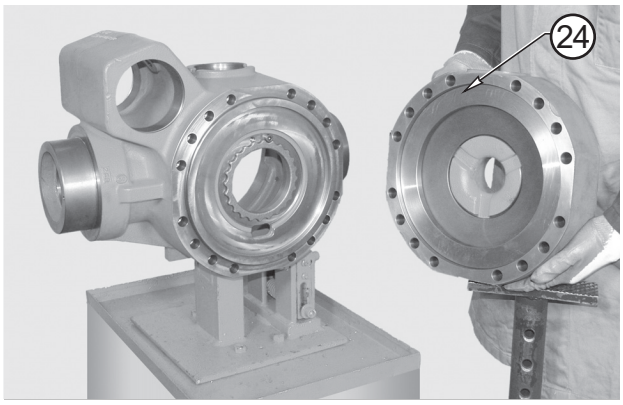

FIGURE 10: Remove the cylinder (24).

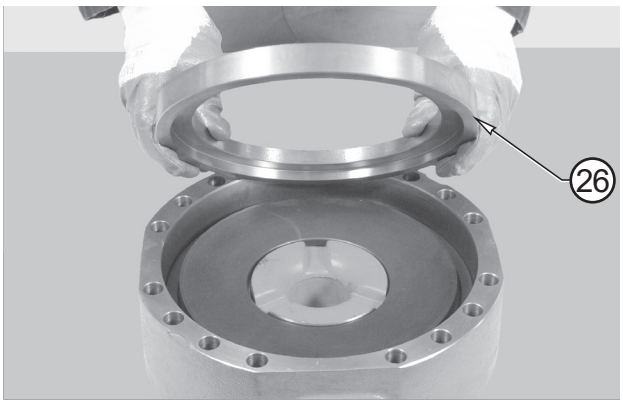

FIGURE 11: Remove the centering device (26) in the cylinder.

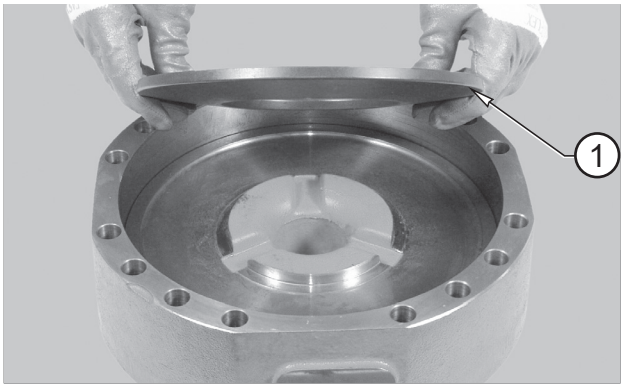

FIGURE 12: Remove the Belleville washers (1).

NOTE:

Check the sense of direction of washers (1).

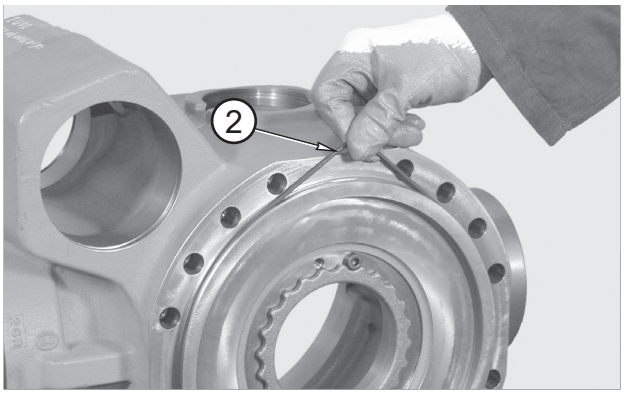

FIGURE 13: The o-rings (2) must be replaced each time the unit is disassembled.

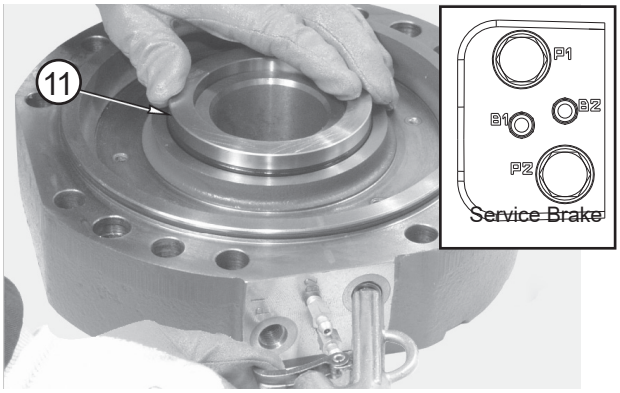

FIGURE 14: Slowly introduce low-pressure compressed air through the connection member for the service brake (P2), in order to extract the piston (11).

⚠CAUTION

Hold the piston (11) back, as it may be suddenly ejected and damaged.

FIGURE 15: Mark the assembly position.

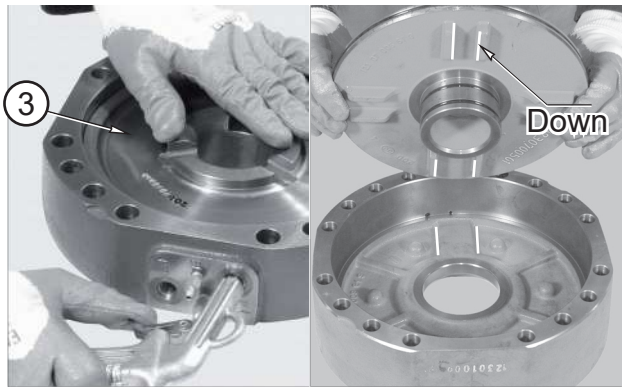

FIGURE 16: Slowly introduce low-pressure compressed air through the connection member for the service brake (P1), in order to extract the piston (3).

⚠CAUTION

Hold the piston (3) back, as it may be suddenly ejected and damaged.

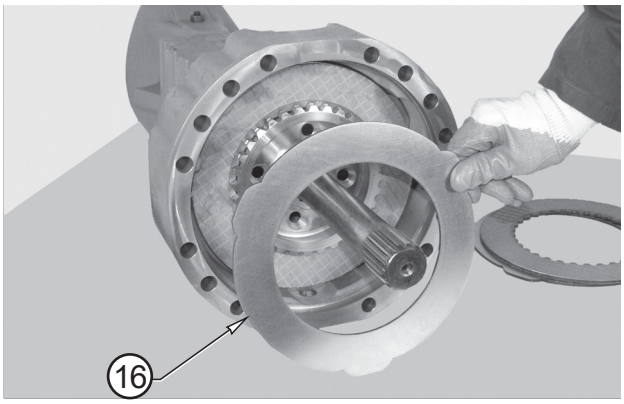

FIGURE 17: Remove braking discs (14, 15, 16), noting down direction of assembly.

NOTE:

If disks are not being replaced, avoid changing their position.

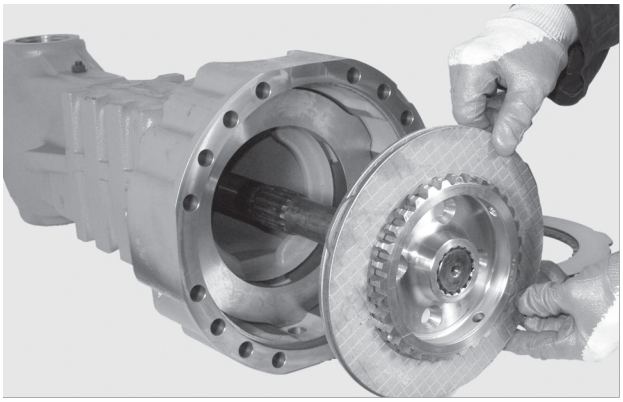

FIGURE 18: Remove the flange (17) complete with the discs (20, 19, 18).

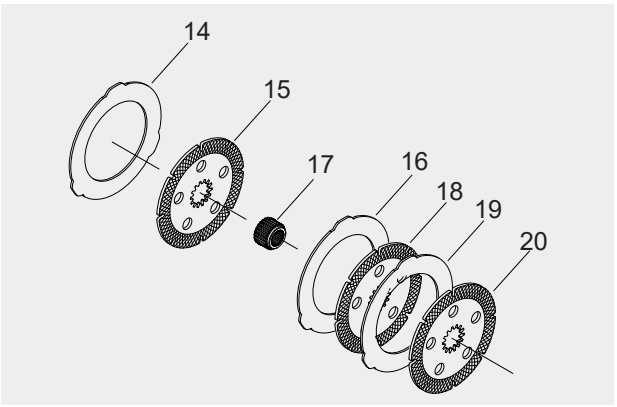

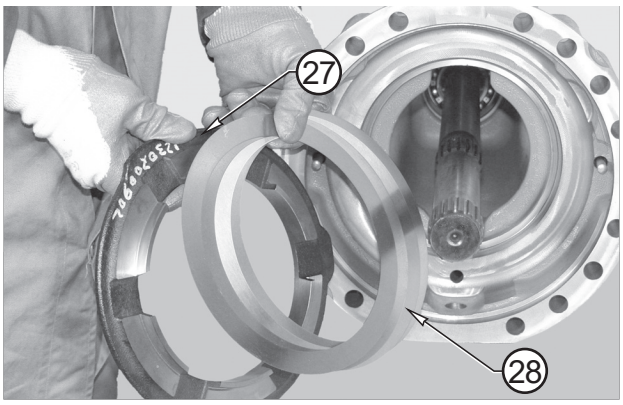

FIGURE 19: Remove spacer-braking discs (27) and shims (28), noting down direction of assembly.

NOTE:

Build a stack of washers and check the measurement.

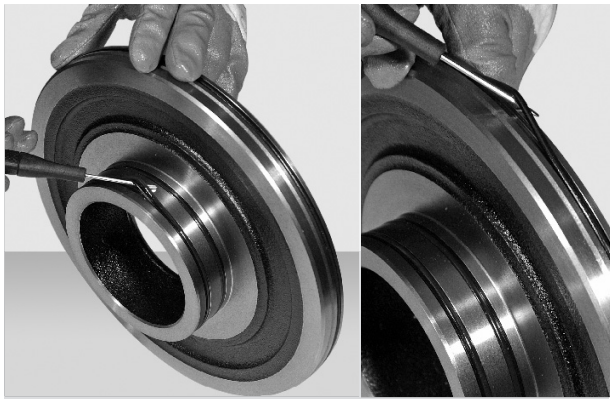

FIGURE 20: Fit antitwist rings (2, 25) onto the piston (3).

⚠WARNING

Antitwist ring replaces o-ring + backup ring solution.
For details, see PSB-0395.

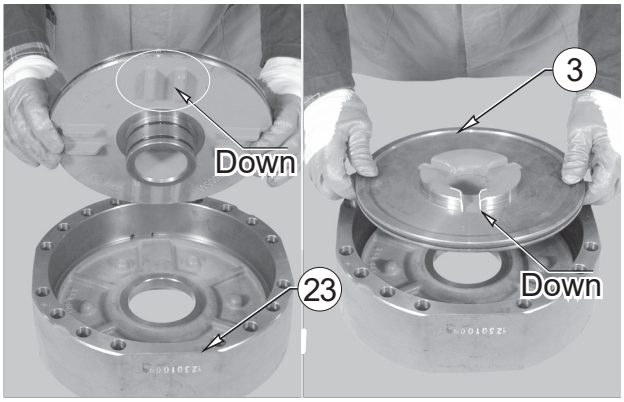

FIGURE 21: Check the position of the antitwist rings (2, 25). Lubricate the piston and the antitwist rings and install the unit (3) into the cylinder (24).

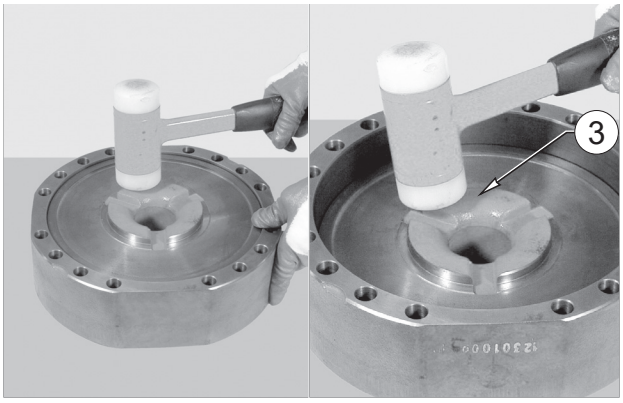

FIGURE 22: Using a plastic hammer, install the piston (3) into the cylinder (24).

NOTE:

Lightly hammer all around the edge in an alternate sequence.

FIGURE 23: Fit antitwist rings (10) onto the piston (11).

⚠WARNING

Antitwist ring replaces o-ring + backup ring solution.
For details, see PSB-0395.

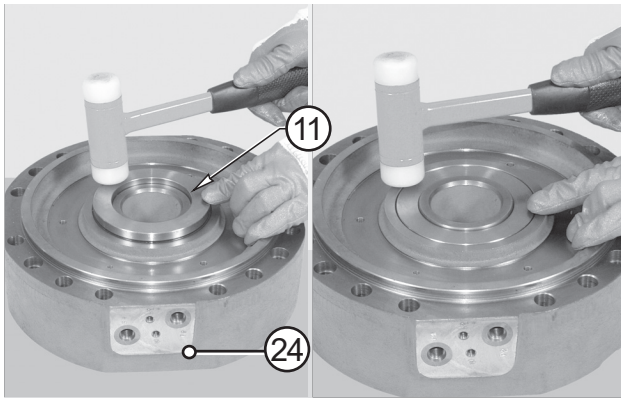

FIGURE 24: Using a plastic hammer, install the piston (11) into the cylinder (24).

NOTE:

Lightly hammer all around the edge in an alternate sequence.

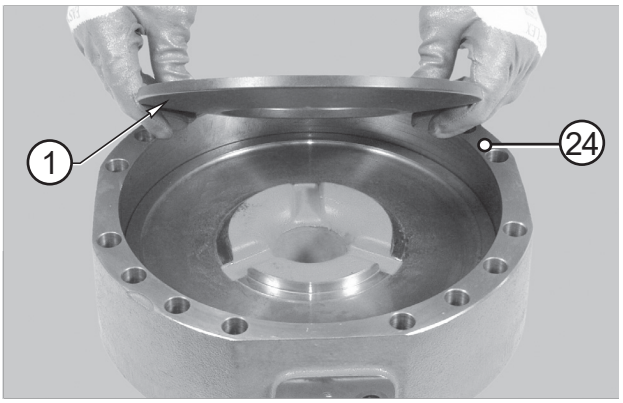

FIGURE 25: Position the Belleville washers (1) and engage the cylinder (24).

NOTE:

Check the sense of direction of Belleville washers (1) and relative centering.

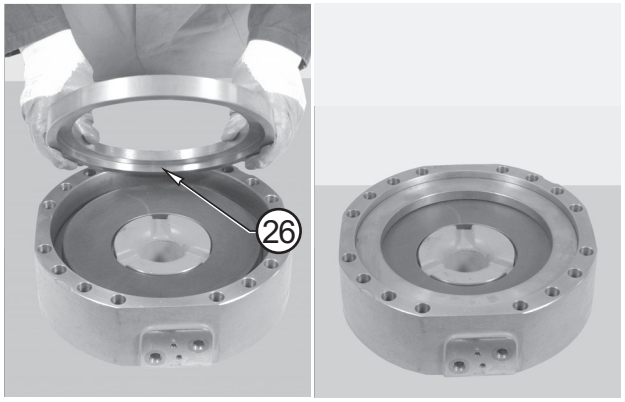

FIGURE 26: Install the centering device (26) in the cylinder.

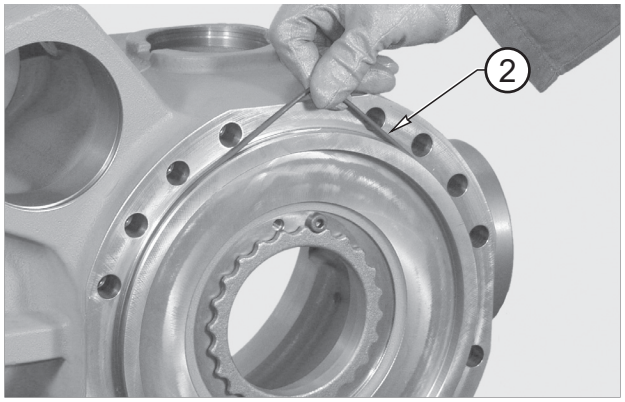

FIGURE 27: Check integrity and position of the cylinder's oring (2).

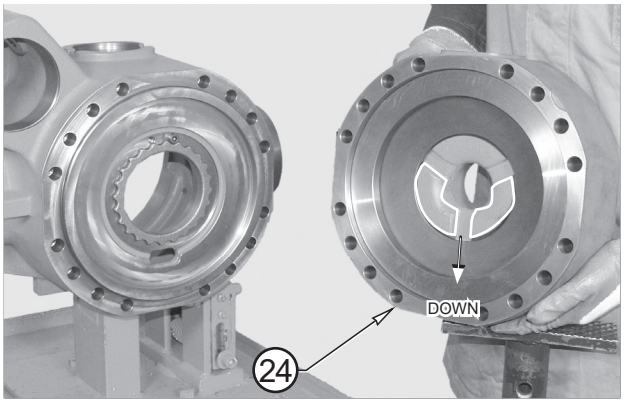

FIGURE 28: Engage the cylinder (24).

NOTE:

Check the sense of direction of washers (1) and relative centering.

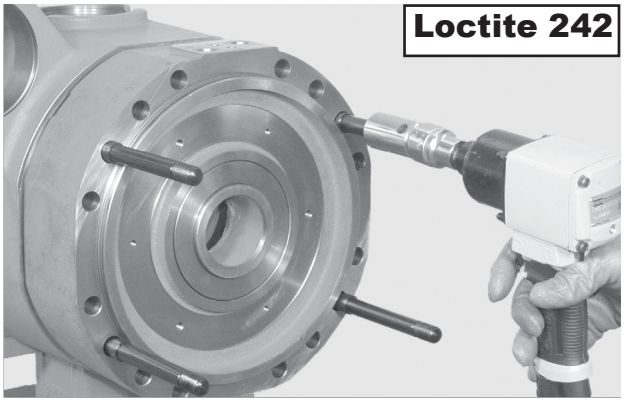

FIGURE 29: Insert the screws and tighten them alternately. Lock the cylinder.

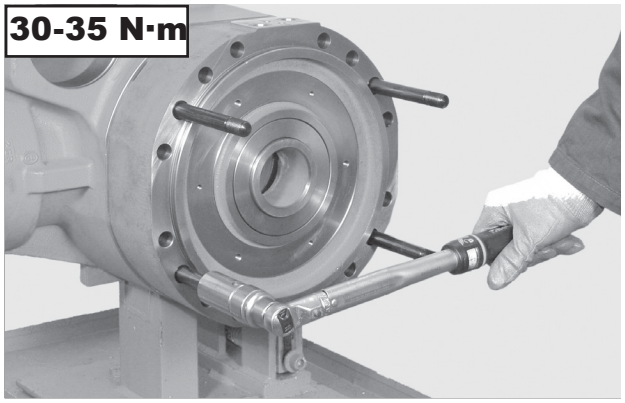

FIGURE 30: Tightening the studs to a torque of 30 - 35 N·m.

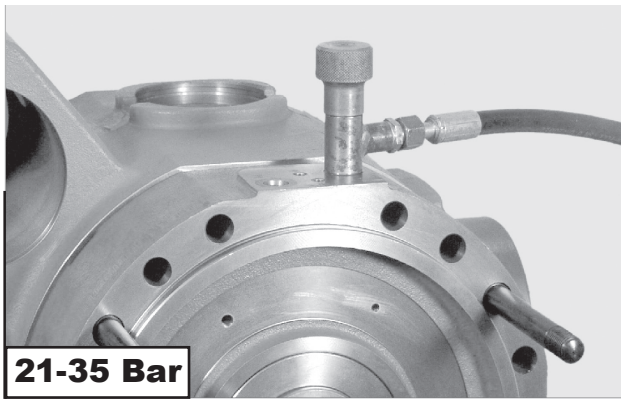

FIGURE 31: Connect an external pump to the negative brake and introduce pressure to 21 -35 bar.

⚠ DANGER

Always check that the hydraulic circuit test for leaks under pressure. Always use a cardboard or a panel to control the loss.

A leak from a hole of the size of a pin can cause serious injury. If fluid is injected into the skin it is necessary to seek immediate medical care.

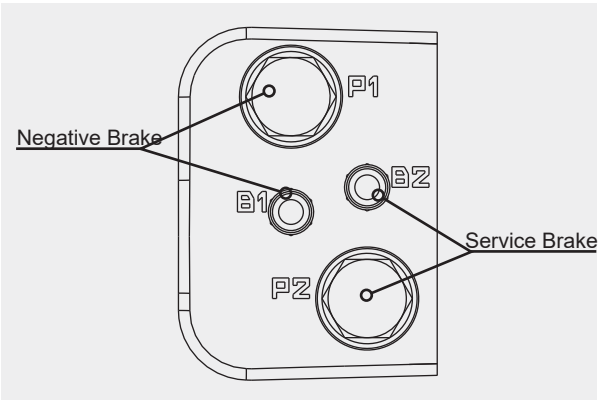

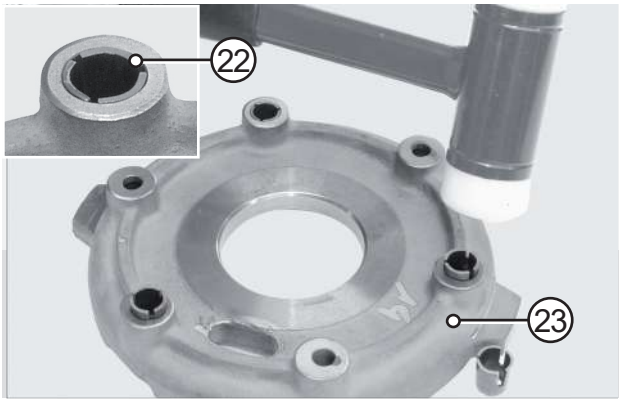

FIGURE 32: Insert the stroke automatic regulation springs (22); place them in line with the piston (23).

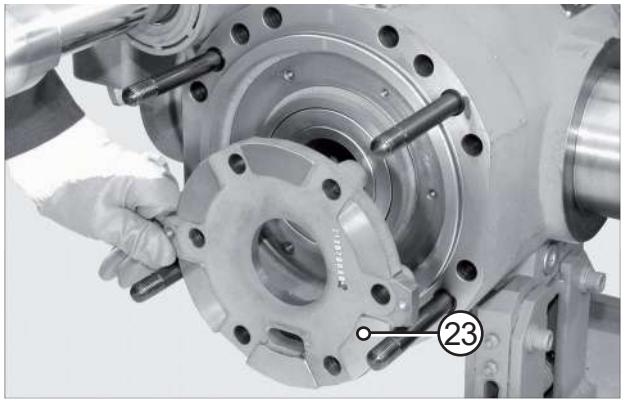

FIGURE 33: Insert the intermediate disk (23).

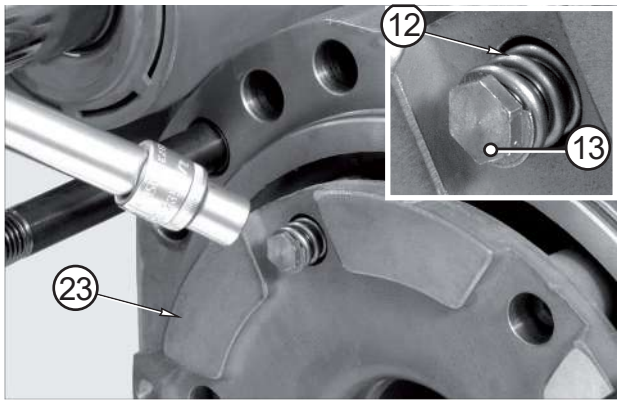

FIGURE 34: Fit the reversal springs (12, 13) on the intermediate disk (23).

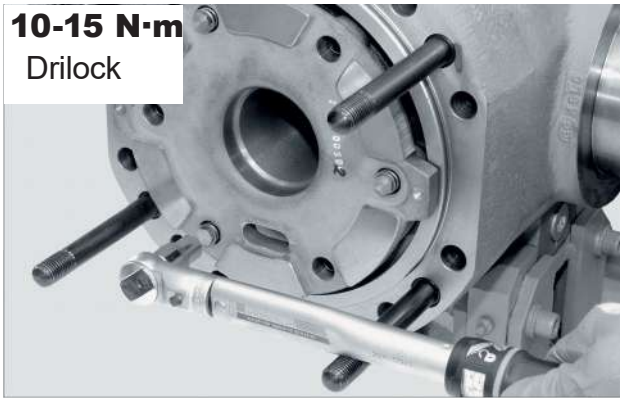

FIGURE 35: Tighten with torque wrench setting of 10 - 15 N·m

⚠CAUTION

Use only new screws pre-treated with Driloc locking adhesive. Threads must be cleaned from oil. Degrease only non pre-treated threads.

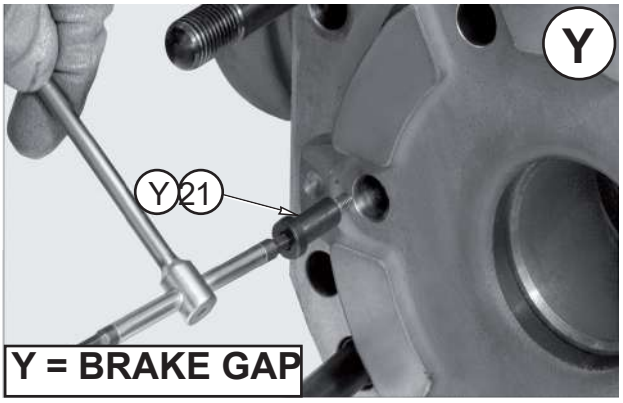

FIGURE 36: Y=brake gap
0,75mm 1,00mm 1,25mm 1,50mm
depending on axle configuration.

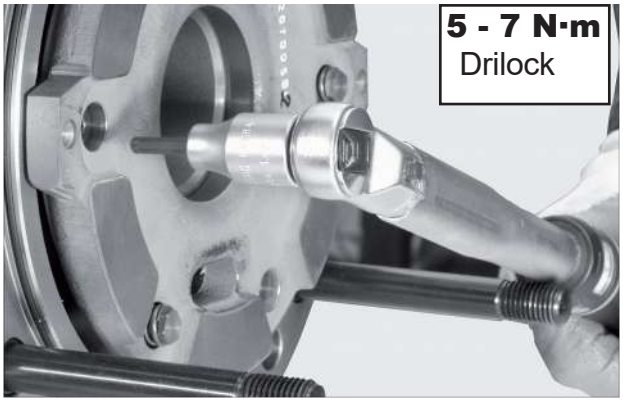

FIGURE 37: Fit the pin screws.
Torque wrench setting: 5-7 N·m.

⚠CAUTION

Use only new screws pre-treated with Driloc locking adhesive. Threads must be cleaned from oil. Degrease only non pre-treated threads.

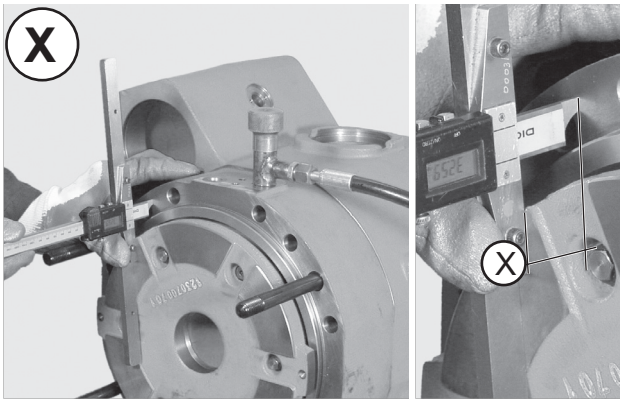

FIGURE 38: Take the measurement from the surface of the intermediate disk to the cover sealing surface with 30 bar of pressure introduced.
EXAMPLE: 29 mm

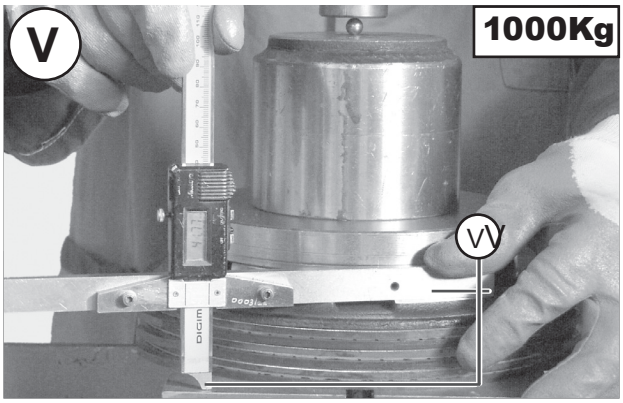

FIGURE 39: Put the brake disc pack including the shim under a press, load with 1000 kg and take the measure "V".
EXAMPLE: V = 42,33 mm

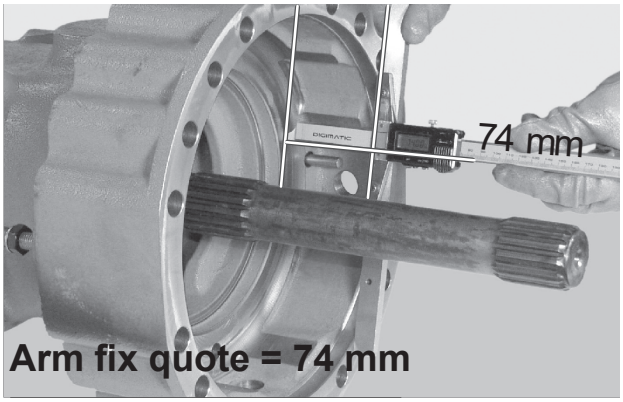

FIGURE 40: Arm fix quote = 74 mm

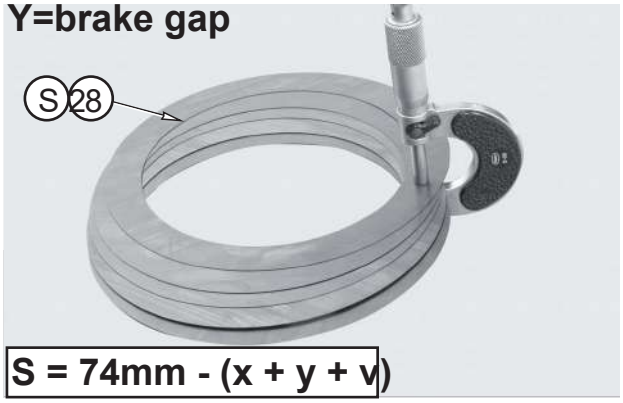

FIGURE 41: S = 74 mm - (x + y + v) = Thickness of shims to insert under the shim washer.
EXAMPLE: 74 mm -(29 + 42,33 + 1,25) = S = 1,42 mm

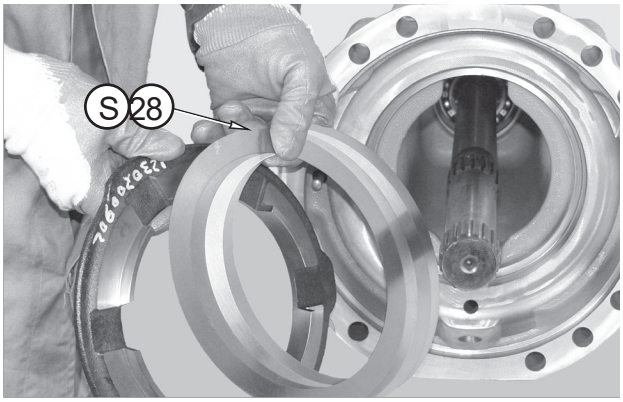

FIGURE 42: Insert under the shim washer a thickness of shims (28).

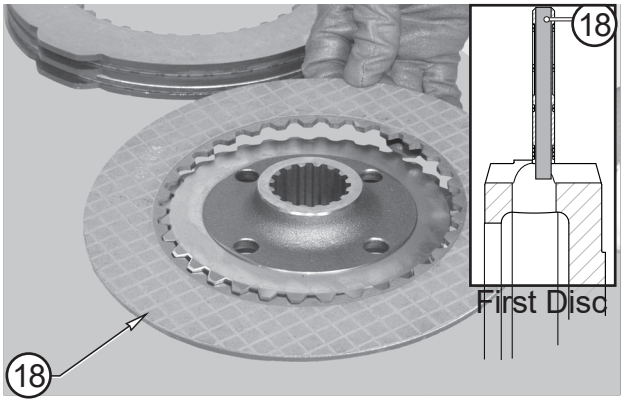

FIGURE 43: Install the friction disc (18) on the flange (17) from arm side.

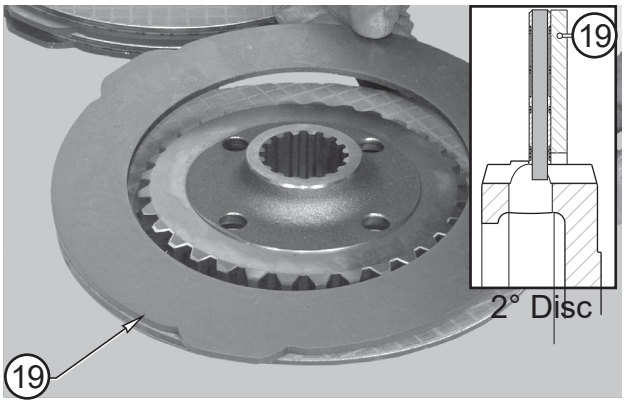

FIGURE 44: Install the metal disc (19) on the flange (17) from arm side.

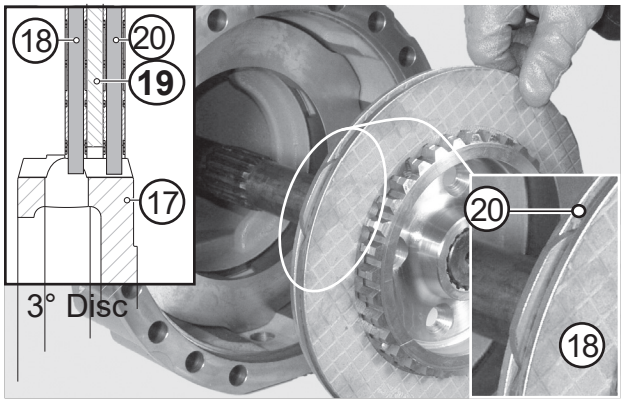

FIGURE 45: Install the friction disc (18) on the flange (17) from arm side and insert the group on the u-joint.

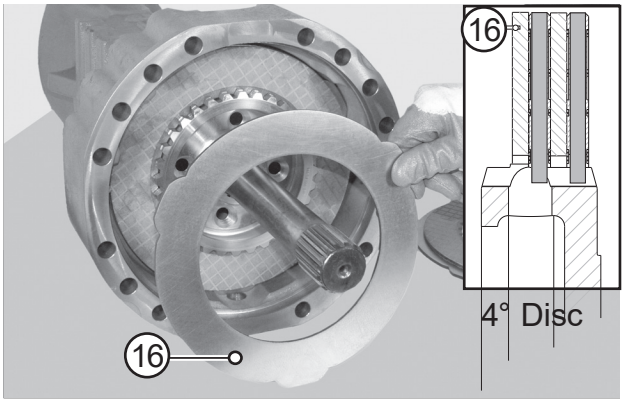

FIGURE 46: Insert on the flange the discs (16, 15, 14).

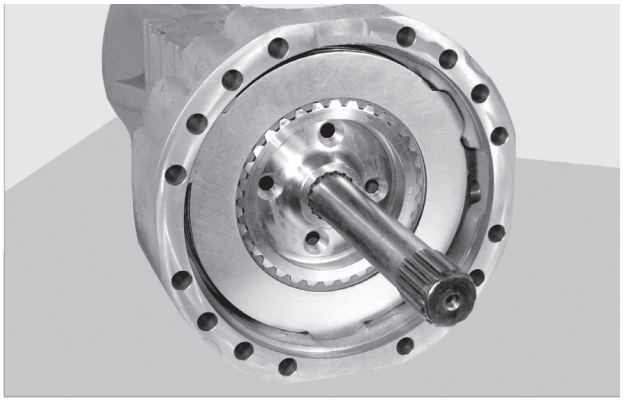

FIGURE 47: Check the alignment of last disc (14) and flange (17).

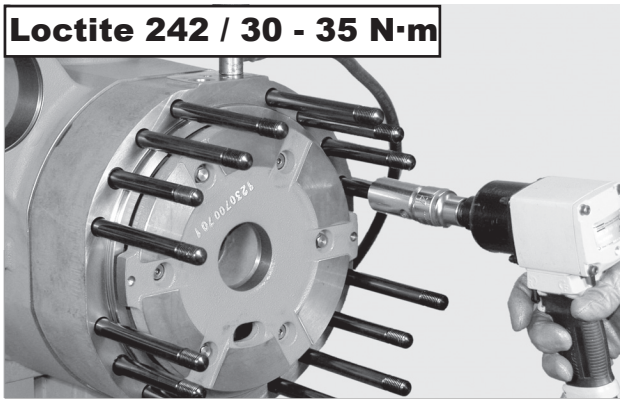

FIGURE 48: Apply Loctite 242 to the studs and tighten to 30 - 35 N·m

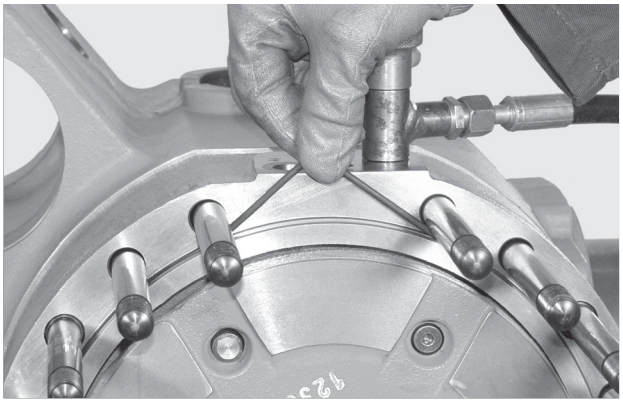

FIGURE 49: Check integrity and position of the cylinder's oring.

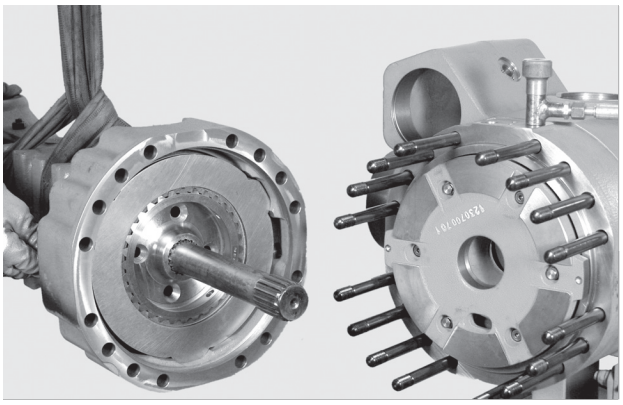

FIGURE 50: Check integrity and position of the arm's o-ring; install the complete arm.

NOTE:

To assist axle shaft centering, slightly move the wheel hub.

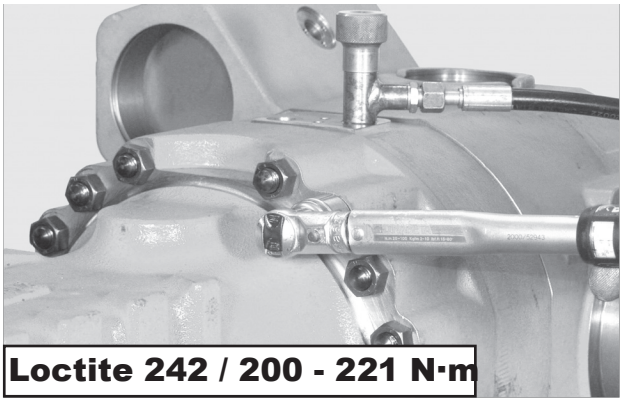

FIGURE 51: Tighten the nuts in two stages to 200 - 221 N·m.

FIGURE 52: Gradually release the pressure in the braking circuit, bringing it to zero through the external pump.

⚠ DANGER

Do not remove any part of the hydraulic circuit without having completely released the hydraulic pressure. The removal of pressurized parts or loss caused from releasing these components can cause serious injuries and even death.
A leak from a hole of the size of a pin can cause serious injury. If fluid is injected into the skin it is necessary to seek immediate medical care.

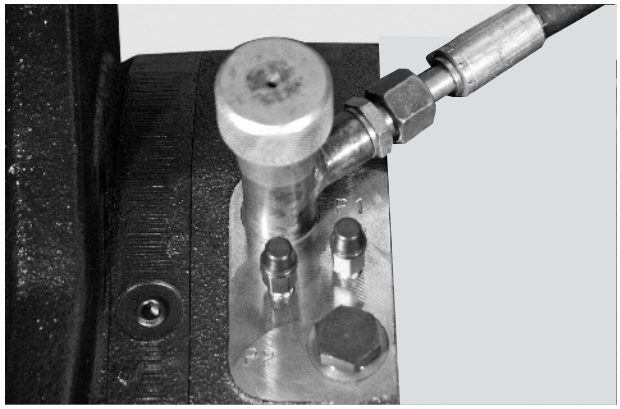

FIGURE 53: Gradually loosen the sleeve and remove.

⚠ DANGER

Carefully check that the hydraulic pressure is discharged completely before removing the external pump sleeve connected to the brake.

MANUAL EMERGENCY RELEASE

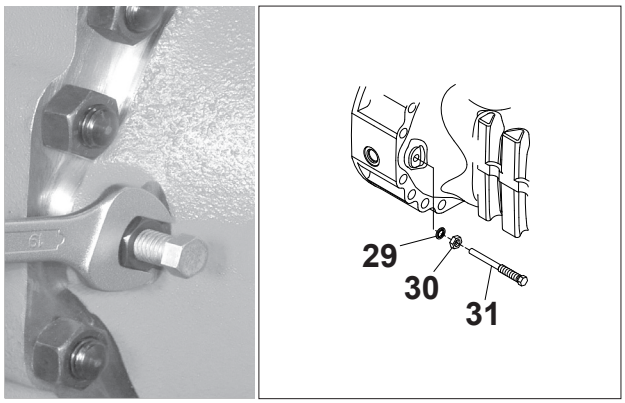

FIGURE 54: Loosen nuts (30) of screws (31) provided for the mechanical and manual release of the braking units, then completely move the nuts backwards.

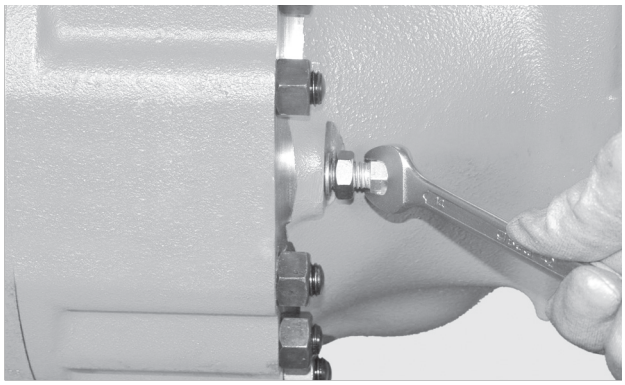

FIGURE 55: Screw in release bolts (31) until contact is made with the pusher plate (27).
Once contact is made, the torque to rotate the screws will increase.

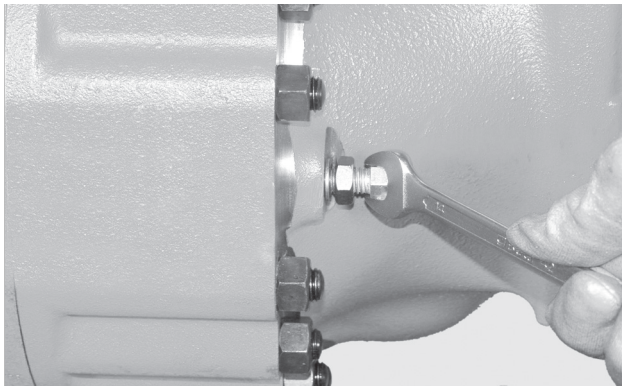

FIGURE 56: From this position, gradually tighten the bolts ¼ turn alternating between each side.

⚠CAUTION

A maximum of 1.5 turns of the screws (31) can be used to release the brakes.

ADJUST

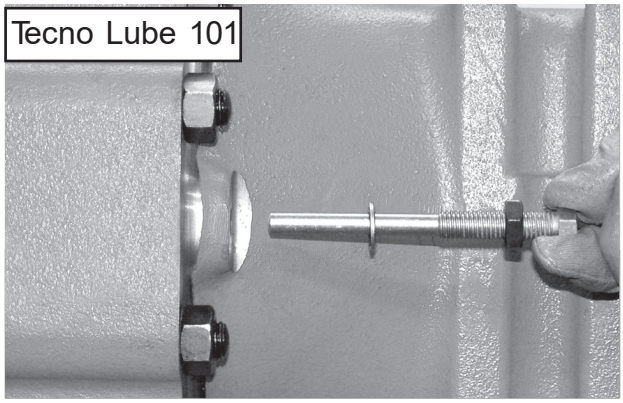

FIGURE 57: Remove screws complete with nuts and seals. Replace seals, apply silicone-based Tecno Lube /101 grease to the screws and install all parts into the arm.

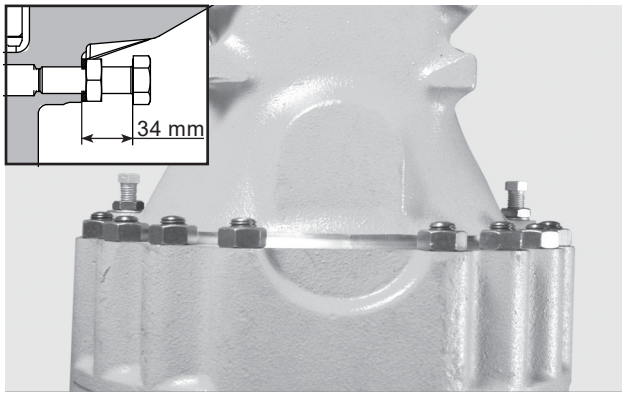

FIGURE 58: Adjust screws (31) to obtain a distance of 34 ± 0.5 mm between axle machined surface and screw underhead.

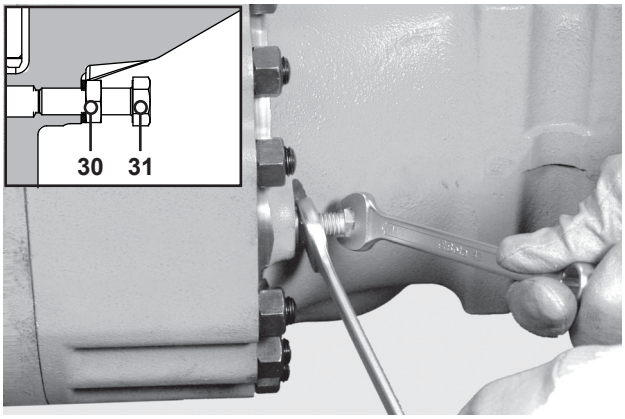

FIGURE 59: Lock into position with nuts (30).

⚠CAUTION

Hold screws (31) into position while locking the nuts (30); after locking, check the distance of screws (31) once more.

DIFFERENTIAL UNIT

EXPLODED VIEW

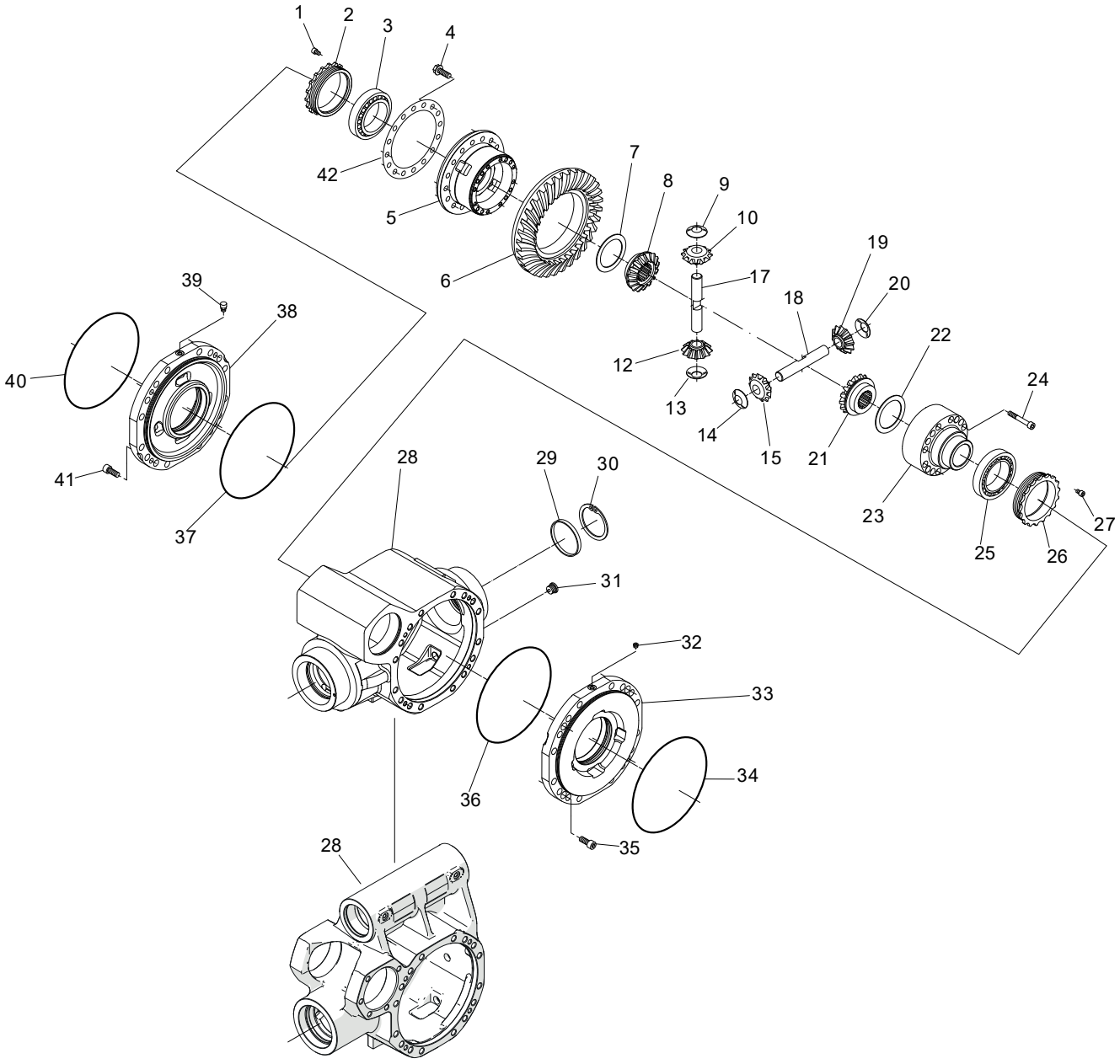

NOTE:

Items 29 & 30 not present on all models

DISASSEMBLY

⚠CAUTION

Before draining oil, release the internal pressure, for details see OIL DRAINING MANDATORY PROCEDURE p. 14.

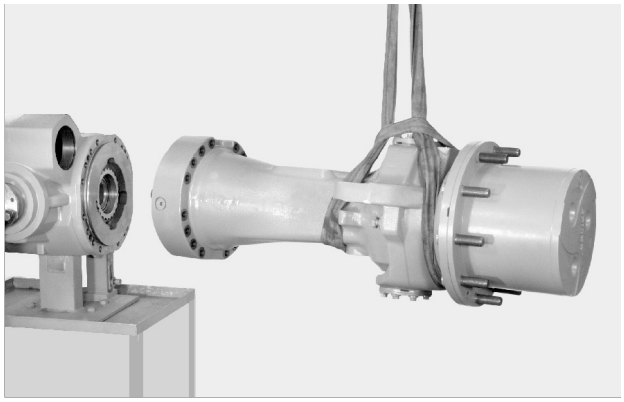

FIGURE 1: Sling the arm to be removed and connect it to a hoist. Loosen and remove screws and nuts.

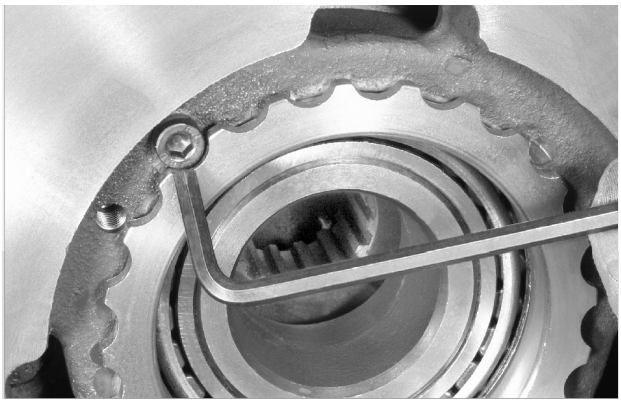

FIGURE 2: Only if removing or adjusting, remove the screw (27).

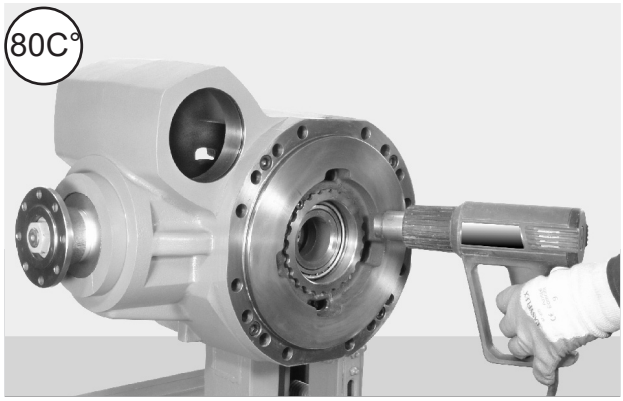

FIGURE 3: Only if removing or adjusting, uniformly heat the ring nuts up to a temperature of 176 °F [80 °C].

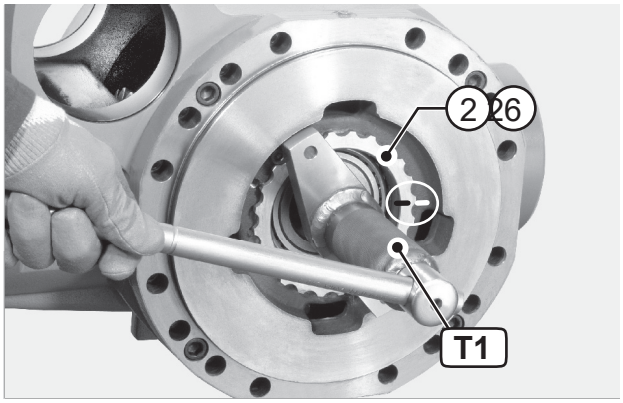

FIGURE 4: Only if removing or adjusting, use special tool T1 (See drawing T1 p. 92) to mark the position of the ring nuts (2, 26).

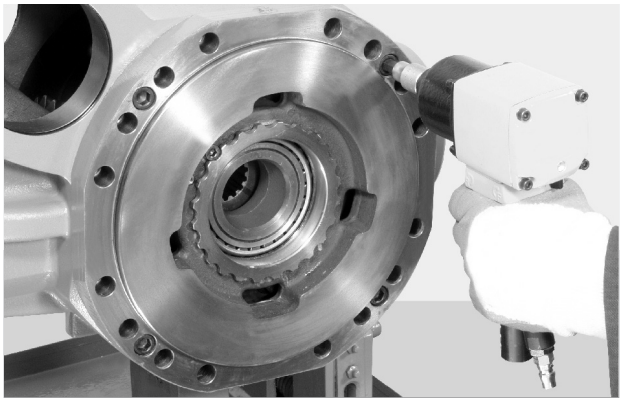

FIGURE 5: Loosen the stud bolts (35, 41) and remove two of them.

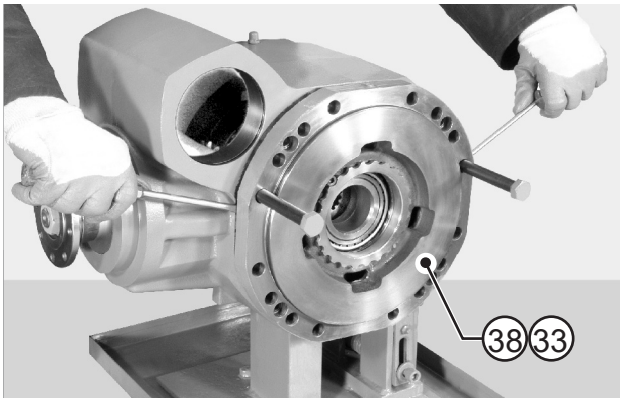

FIGURE 6: Disjoin the cover (38, 33) crown side.

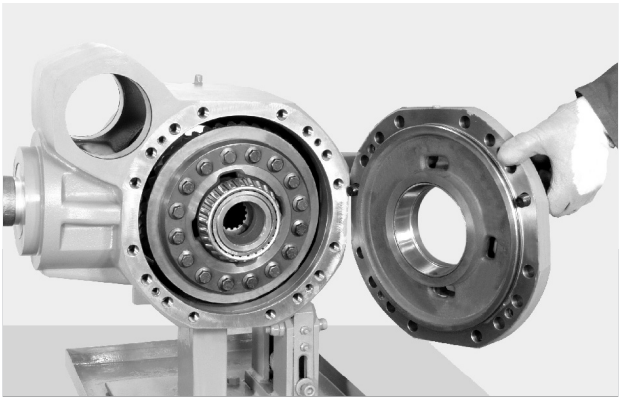

FIGURE 7: Remove the cover and studs.

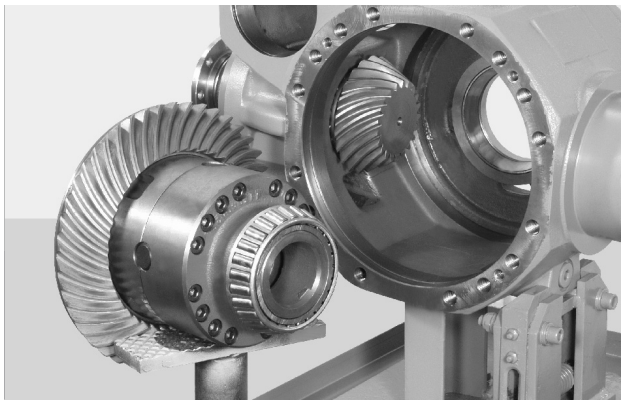

FIGURE 8: Extract the whole differential unit.

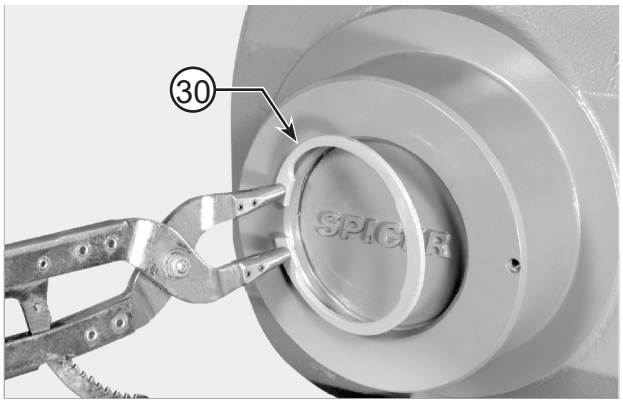

FIGURE 9: Remove the snap ring (30).

⚠CAUTION

MANDATORY PROCEDURE Set the pliers following the correct procedure shown in END-STOP PLIER SETTING p. 15.

⚠WARNING

Removal of the snap rings can cause personal injuries. You must wear appropriate safety equipment. To avoid injury to eyes, wear eye protection equipment.

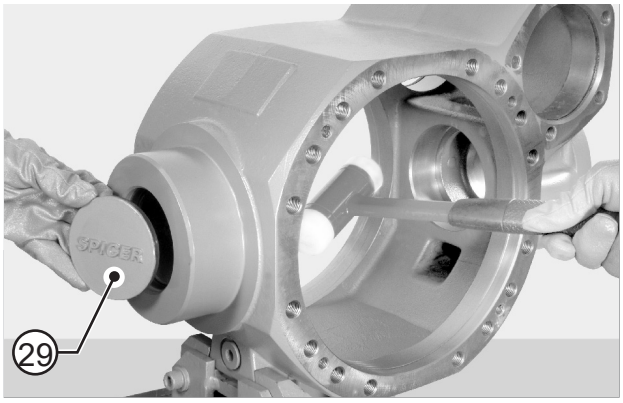

FIGURE 10: Remove the cap (29).

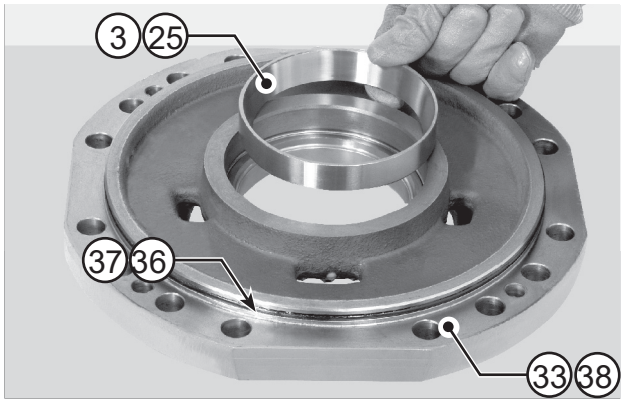

FIGURE 11: If the bearings need replacing, extract the external thrust blocks of the bearings (3, 25) from middle cover (33, 38).

NOTE:

Accurately check the o-ring (37, 36).

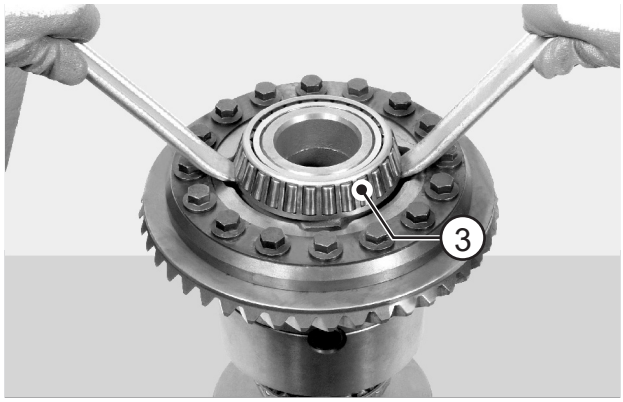

FIGURE 12: If the bearing needs replacing, extract the bearing (3).

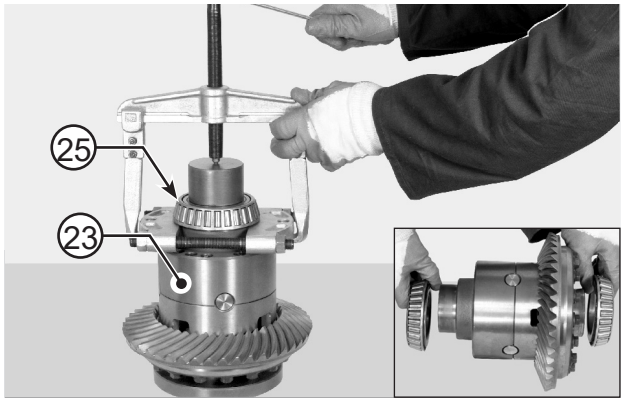

FIGURE 13: If the bearing need replacing, extract the bearing (25) from the differential carrier (23).

FIGURE 14: Remove the ring gear (6) capscrews (4).

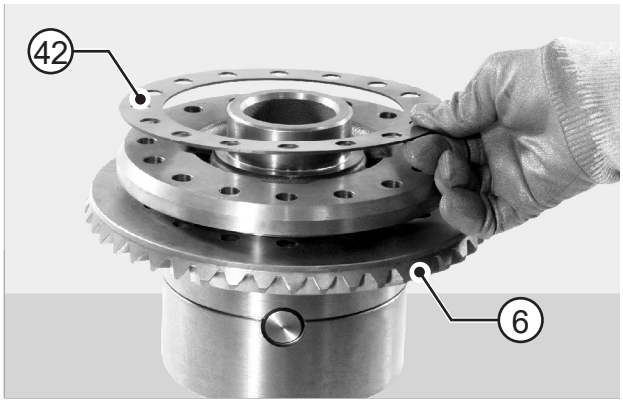

FIGURE 15: Remove the spacer (42) and the ring gear (6).

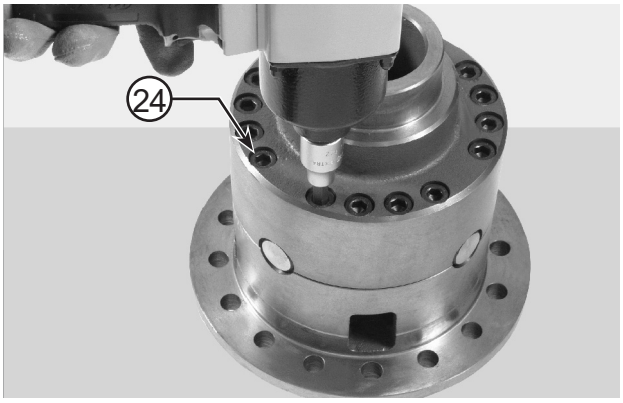

FIGURE 16: Remove the screws (24) joining the differential unit half box.

FIGURE 17: Using a plastic hammer, take the half box (23, 5) to pieces.

NOTE:

Write down the coupling marks.

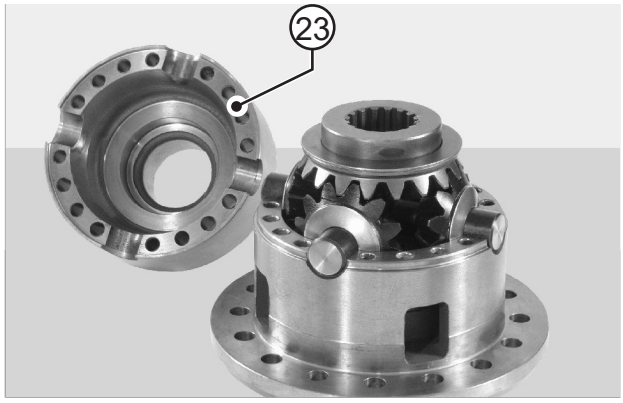

FIGURE 18: Remove the upper half box (23).

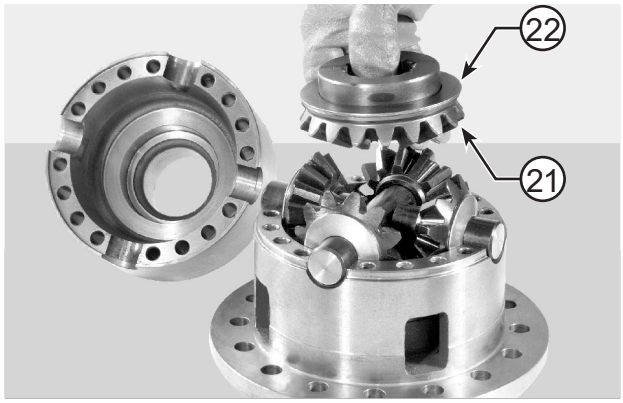

FIGURE 19: Remove shoulder (22) and first planetary gear (21).

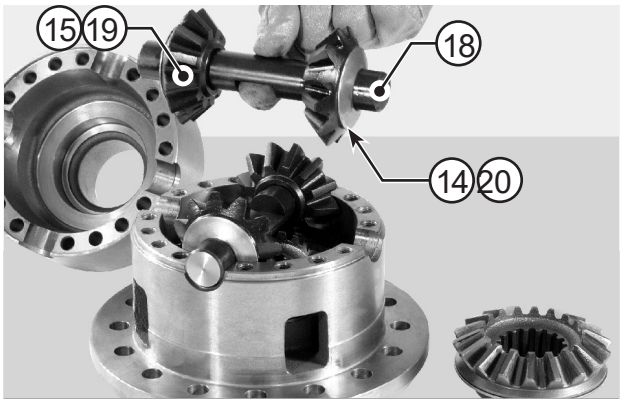

FIGURE 20: Remove shafts (18), complete with planetary gears (15, 19) and spherical shoulder washers (14, 20).

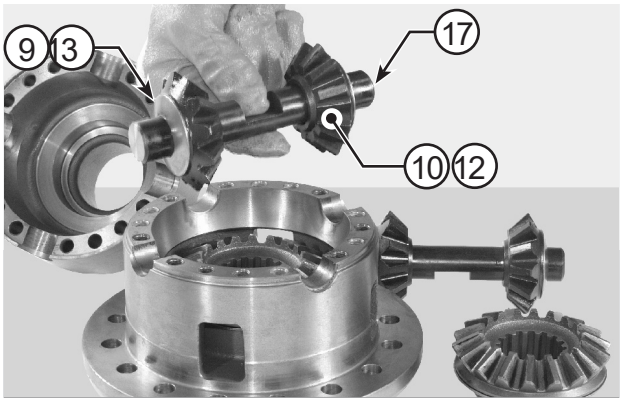

FIGURE 21: Remove shafts (17), complete with planetary gears (10, 12) and spherical shoulder washers (9, 13).

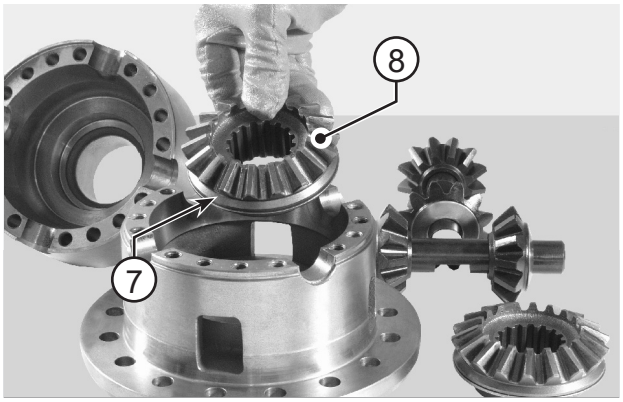

FIGURE 22: Remove the 2nd planetary gear (8) and shoulder ring (7).

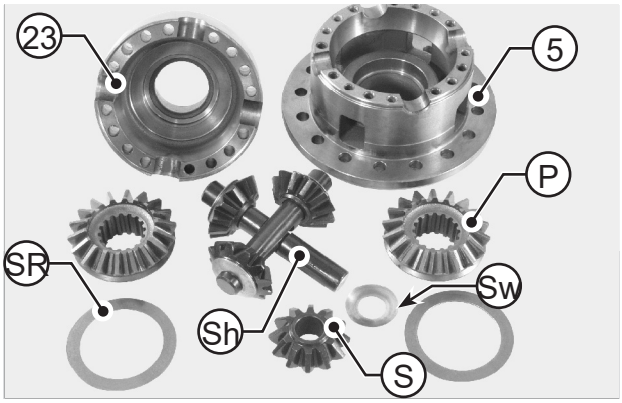

FIGURE 23: The differential unit.

Sh = Shafts (18)(17)

SW = spherical shoulder washers (9)(13)(14) (20)

P= planetary gears (8)(21)

SR = shoulder ring (22)(7)

S= planet wheels (10)(12)(15)(19)

23 = upper half box

5= half box crown side

ASSEMBLY

BEVEL GEAR PAIR P/N	RATIO	INSPECTION HOLE GAP [MM]		SPECIAL TOOL GAP [MM]	
		min.	max.	min.	max.
113.04.500.01	9/33	0,25	0,33	0,47	0,62
113.04.500.02	9/29	0,25	0,33	0,43	0,57
113.04.500.03	11/34	0,25	0,33	0,41	0,54
113.04.500.04	9/33	0,25	0,33	0,47	0,62
113.04.500.07	9/29	0,25	0,33	0,43	0,57
113.04.500.08	8/33	0,25	0,33	0,51	0,67
113.04.500.09	8/33	0,25	0,33	0,54	0,71
113.04.500.10	13/32	0,25	0,33	0,33	0,43
113.04.500.11	13/32	0,25	0,33	0,33	0,43
113.04.500.12	11/34	0,25	0,33	0,41	0,54
113.04.500.13	9/33	0,25	0,33	0,47	0,62
113.04.500.14	9/33	0,25	0,33	0,47	0,62
113.04.500.15	9/31	0,25	0,33	0,42	0,55
113.04.500.16	9/31	0,25	0,33	0,45	0,60
113.04.500.19	11/34	0,25	0,33	0,41	0,54
113.04.501.02	9/29	0,30	0,41	0,48	0,65
113.04.501.03	9/29	0,30	0,41	0,48	0,65
113.04.501.05	9/33	0,25	0,33	0,45	0,59
113.04.502.02	13/32	0,25	0,33	0,32	0,42
113.04.502.04	11/34	0,25	0,33	0,41	0,54
113.04.502.05	13/32	0,25	0,33	0,33	0,43
113.04.502.06	11/34	0,25	0,33	0,41	0,54
113.04.503.02	11/34	0,25	0,33	0,41	0,54
113.04.504.05	9/29	0,30	0,41	0,48	0,65
113.04.505.01	9/29	0,30	0,41	0,48	0,65
113.04.505.02	11/34	0,25	0,33	0,38	0,50
113.04.505.03	9/33	0,25	0,33	0,45	0,59
114.04.500.03	9/33	0,30	0,41	0,46	0,63
114.04.500.04	9/33	0,30	0,41	0,46	0,63
114.04.501.01	9/33	0,30	0,41	0,46	0,63
114.04.501.02	9/33	0,30	0,41	0,46	0,63
114.04.501.04	11/34	0,30	0,41	0,39	0,54
114.04.501.05	11/34	0,30	0,41	0,39	0,54
176.04.501.03	6/43				
176.04.503.02	9/33	0,25	0,33	0,47	0,62
176.04.504.02	8/35	0,20	0,28	0,50	0,69
176.04.504.03	8/35	0,20	0,28	0,50	0,69

BEVEL GEAR PAIR P/N	RATIO	INSPECTION HOLE GAP [MM]		SPECIAL TOOL GAP [MM]	
		min.	max.	min.	max.
176.04.504.04	14/32	0,20	0,28	0,26	0,37
176.04.504.05	9/33	0,20	0,28	0,42	0,58
176.04.504.07	9/31	0,20	0,28	0,39	0,55
176.04.504.08	13/32	0,20	0,28	0,28	0,39
176.04.504.09	8/31	0,20	0,28	0,44	0,62
176.04.504.10	8/31	0,20	0,28		
176.04.504.12	14/32	0,20	0,28	0,26	0,37
176.04.504.13	9/31	0,20	0,28	0,39	0,55
176.04.504.15	8/33	0,20	0,28	0,47	0,66
176.04.504.16	8/33	0,20	0,28	0,47	0,66
176.04.504.19	9/31	0,20	0,28	0,39	0,55
176.04.504.22	8/35	0,20	0,28	0,50	0,69
176.04.504.23	9/33	0,20	0,28	0,42	0,58
176.04.504.25	11/36	0,18	0,23	0,33	0,42
176.04.504.26	11/36	0,18	0,23	0,33	0,42
176.04.506.01	13/32	0,20	0,28	0,28	0,39
176.04.506.02	9/33	0,20	0,28	0,42	0,58
176.04.506.04	9/31	0,20	0,28	0,39	0,55
176.04.506.05	10/31	0,20	0,28	0,35	0,49
176.04.506.06	8/35	0,20	0,28	0,50	0,69
190.04.500.01	13/32	0,25	0,33	0,33	0,43
192.04.500.02	7/51	0,15	0,20		
192.04.501.01	7/51	0,13	0,18		
193.04.500.01	6/43	0,18	0,23		
734.04.508.15	10/31	0,18	0,23	0,32	0,41
734.04.507.07	10/31	0,20	0,28	0,35	0,49
10055146	13/37	0,20	0,28	0,29	0,41
10055145	13/37	0,20	0,28	0,29	0,41
10052732	7/51	0,15	0,20		

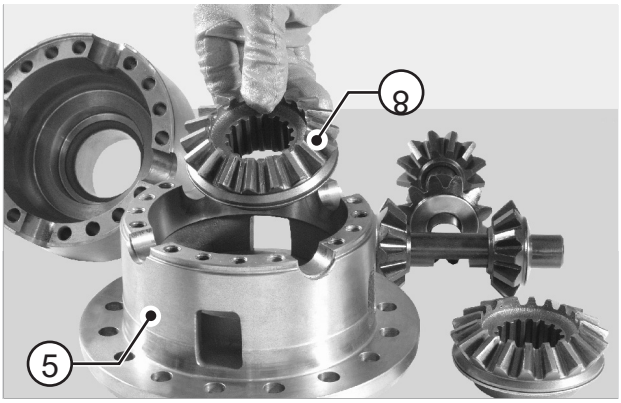

FIGURE 24: Install the shoulder ring (7) and planetary gear (8) into the halfbox (5).

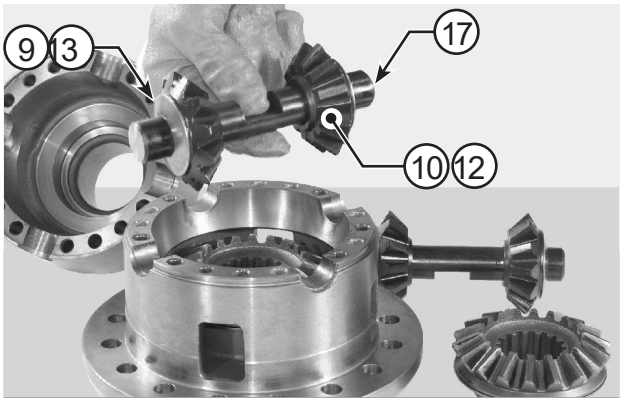

FIGURE 25: Install the planetary gears (10, 12) and spherical shoulder washers (9, 13) onto the shafts (17). Install the planetary set.

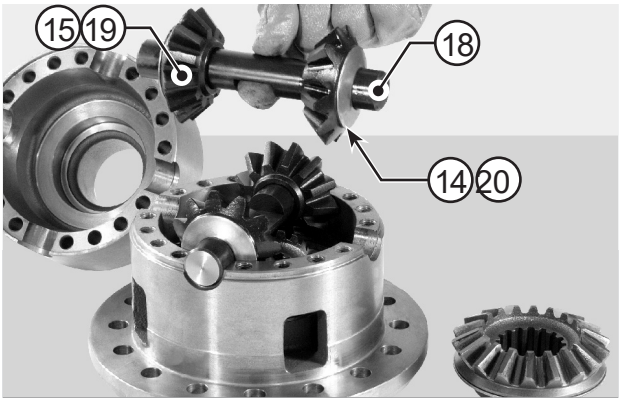

FIGURE 26: Install the planetary gears (15, 19) and spherical shoulder washers (14, 20) onto the shafts (18). Install the planetary set.

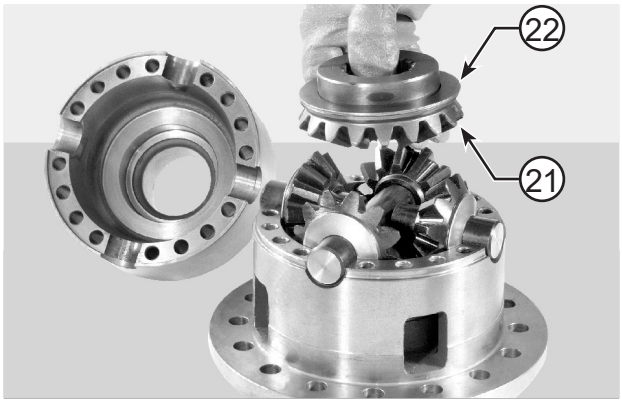

FIGURE 27: Install the planetary gear (21) and shoulder ring (22).

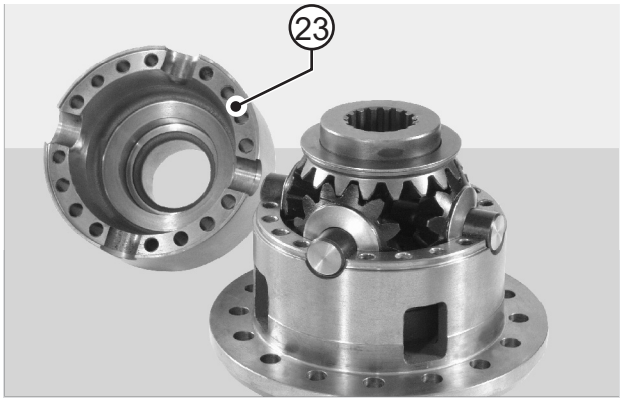

FIGURE 28: Install the locking half-box (5) onto the half-box (23)

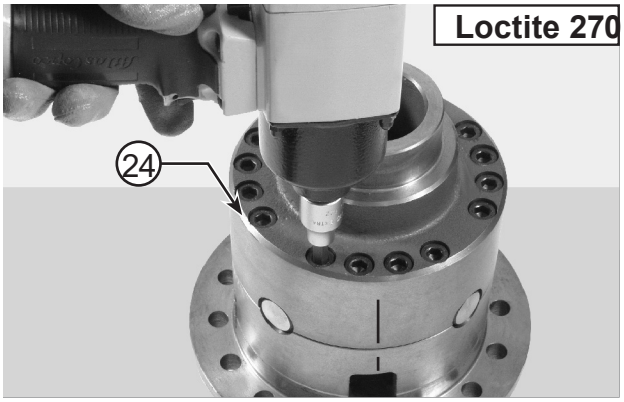

FIGURE 29: Lock the half box with screws (24) coated with Loctite 270.

⚠CAUTION

1 - The match marks on the two half-boxes must correspond.
2 - Use only new screws.

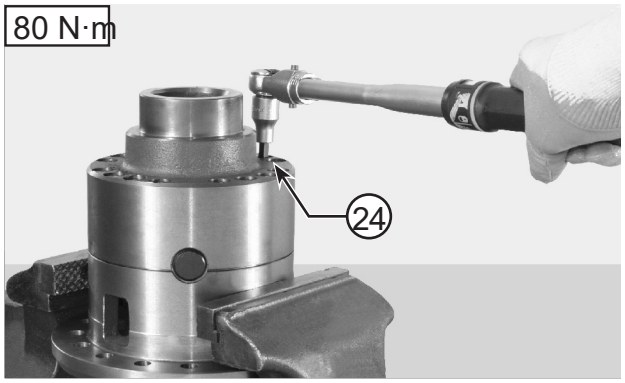

FIGURE 30: Fit the complete differential unit in a vice and tighten the screws (24) holding the two half boxes together to a torque of 80 N·m.

⚠CAUTION

Tighten screws using the criss-cross method.

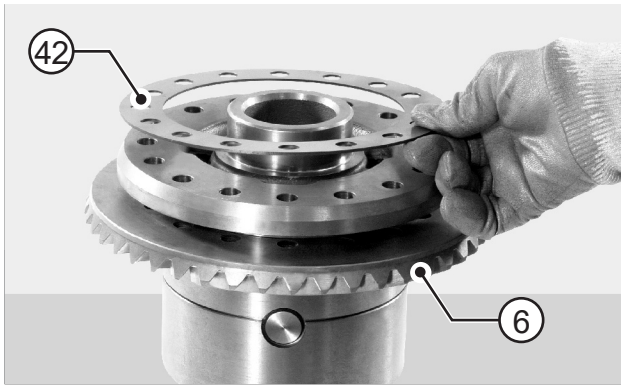

FIGURE 31: Install the spacer (42) and the ring gear (6).

FIGURE 32: Install the ring gear (6) and fasten it to the differential box with screws (4).

⚠CAUTION

Use only new screws.

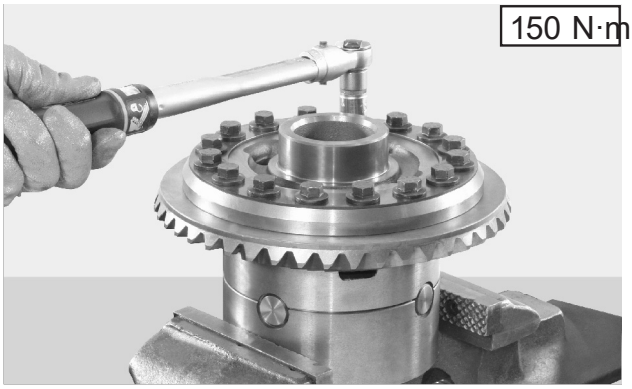

FIGURE 33: Lock the ring gear (6) by tightening the screws (4) to a torque of 150 N·m using the criss-cross method.

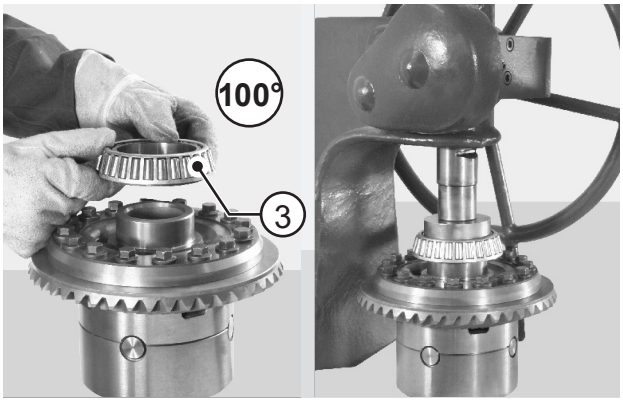

FIGURE 34: INSTALLATION OF THE DIFFERENTIAL UNIT
Position the differential unit under a press and, using a driver with an adequate diameter, install the first bearing (3).

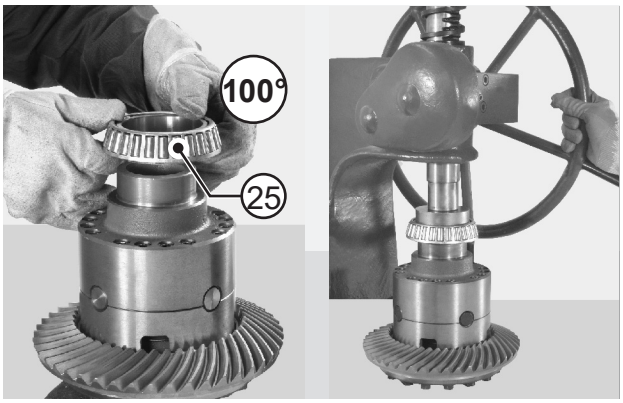

FIGURE 35: Turn the unit upside down and install the second bearing (25).

⚠CAUTION

Pay particular attention; position a shim with adequate diameter in order to engage the internal ring of bearing without engaging the cage.

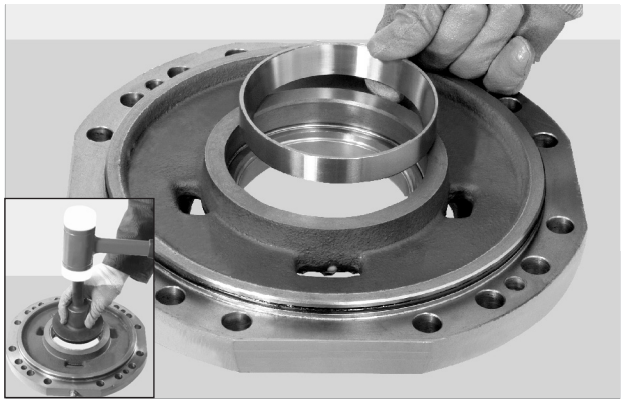

FIGURE 36: Only if bearings are replaced, insert the thrust blocks of the bearings into the intermediate covers.

FIGURE 39: Position the differential unit in the central housing using a bar and fit the middle cover.

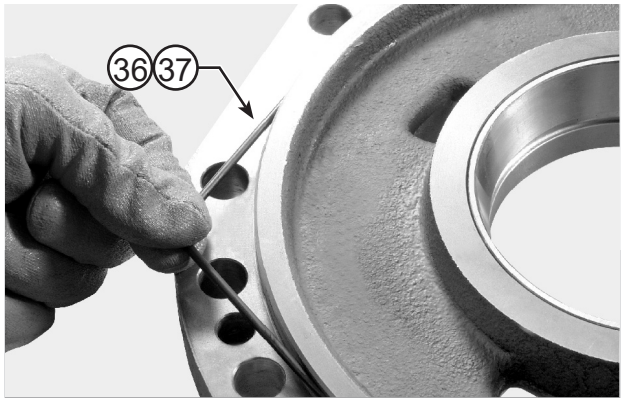

FIGURE 37: Thoroughly check the condition of the o-ring (36, 37).

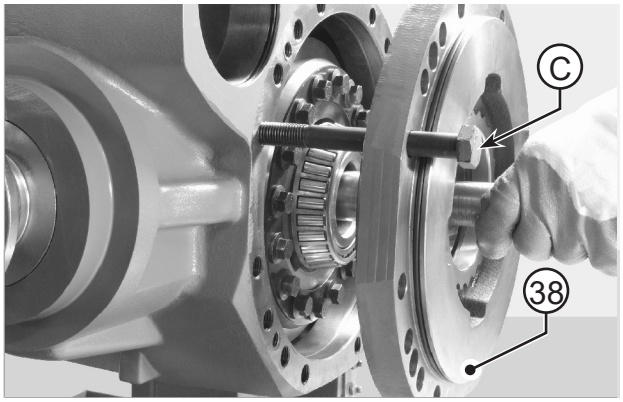

FIGURE 40: Tighten the two safety screws "C" into the central housing (28) and install the intermediate cover (38).

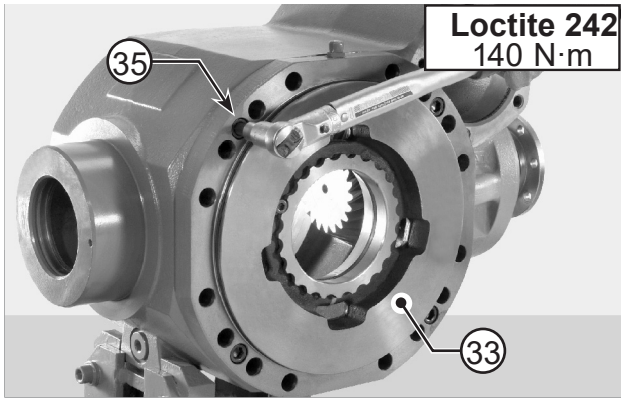

FIGURE 38: Fit the intermediate cover (33) on opposite side of ring gears: lock cover with screws (35) coated with Loctite 242.

Tighten screws to a torque of 140 N·m.

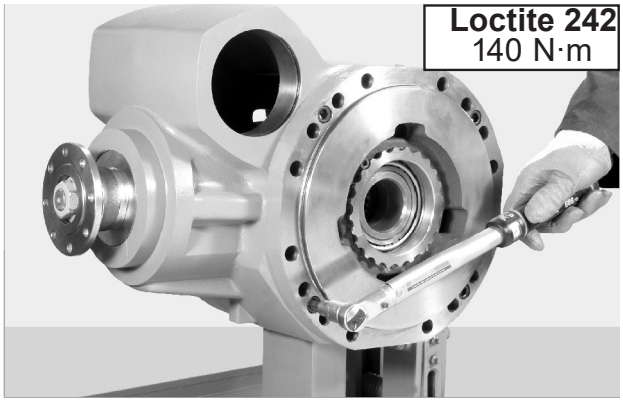

FIGURE 41: Tighten screws to a torque of 140 N·m.

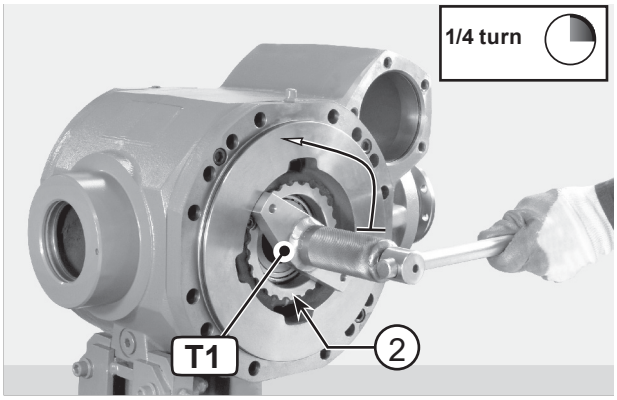

FIGURE 42: Only if ring nuts have been removed, tighten the ring nut (2) on ring gear side until clearances between pinion and ring gear are zeroed. Then, loosen by about 1/4 turn.

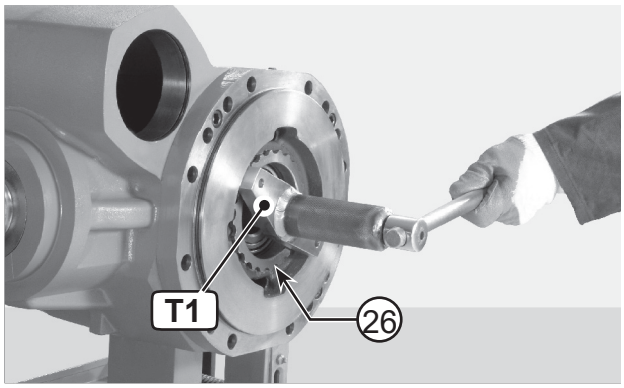

FIGURE 43: Only if ring nuts have been removed, preload bearings with ring nut (26) on non-ring gear side in order to increase the torque of the pinion.

FIGURE 44: Apply torque meter TM to pinion nut and check that torque will increase by 20 - 40 N·cm as a result of differential bearing preload.
Example: pinion torque: 120 - 130 N·cm
Pinion + differential torque: 140 - 170 N·cm.

⚠CAUTION

In the case of used bearings, check thrust torque; in the case of new bearings, check continuous torque.

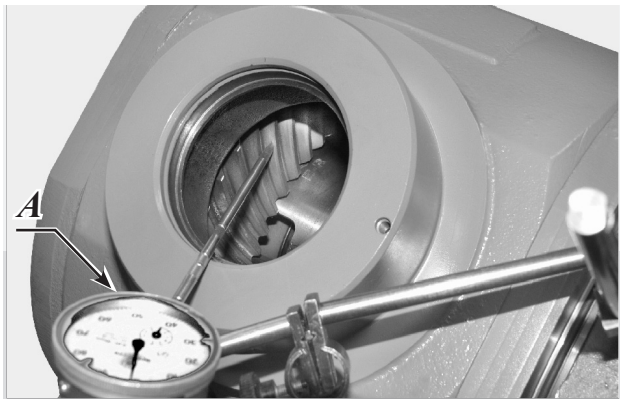

FIGURE 45: Introduce a gauge "A" with long tracer through the hole provided for the cap. Position the tracer on the side of a tooth of the ring gear, approximately 5 mm from the outer rim; preload by about 1 mm and zero the gauge.

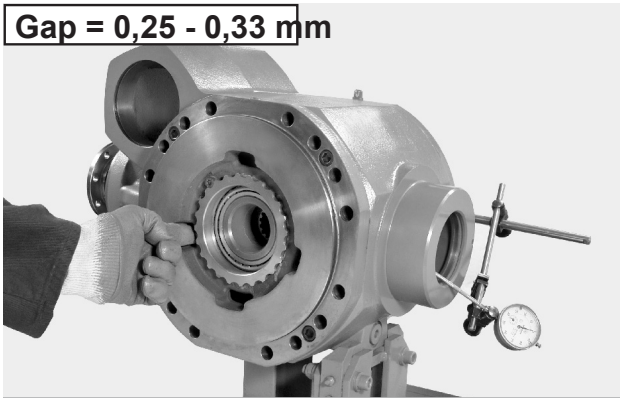

FIGURE 46: As you hold the pinion in position, move the ring gear manually in both directions to check clearance between pinion and ring gear. Tolerance: see p. 85.

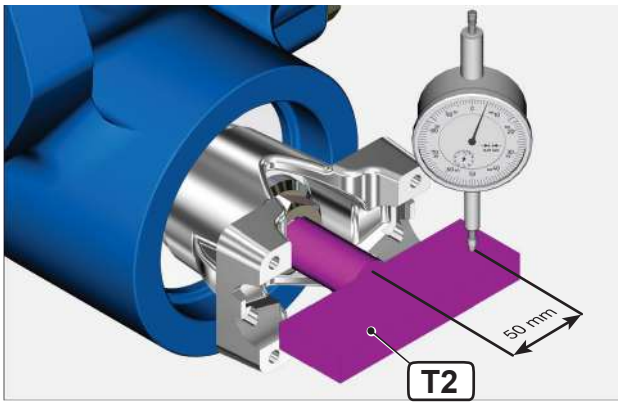

FIGURE 47: ONLY FOR HEAVY DUTY
Install a dial gauge as shown and shift the flange to check the tolerance between the bevel gear teeth as you hold the ring gear in position.
Tolerance: see p. 85.

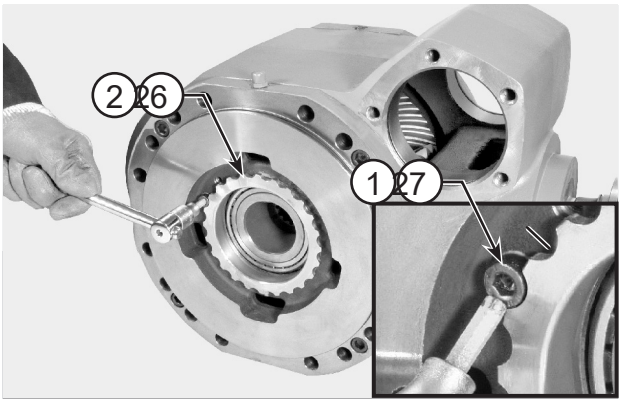

FIGURE 48: If torque and/or pinion-ring gear clearance is not within tolerance values and the ring nuts have not been removed, mark the position of the ring nuts (2, 26) and remove the safety plates (1, 27).

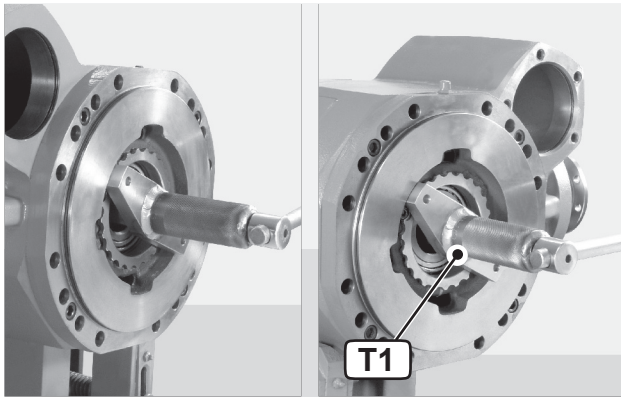

FIGURE 49: Adjusting clearance between pinion and ring gear. To INCREASE: loosen the ring nut on ring gear side and tighten the ring nut on non-ring gear side by the same measure. To DECREASE: perform the same operations inversely. To rotate ring nuts, use special wrench T1 (See drawing T1

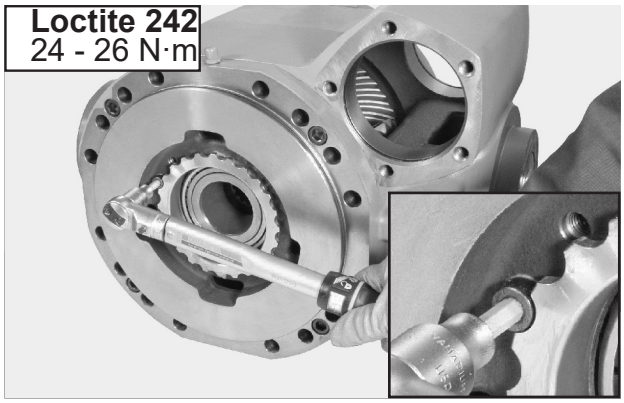

FIGURE 50: Engage screw (27) in the slot next to the holes provided for the check screws.
Coat screws (27) with Loctite 242 and tighten to a torque of 24 - 26 N·m.

FIGURE 51: Fit the top plug after applying repositionable jointing compound for seals to the rims. Install the snap ring.

⚠CAUTION

MANDATORY PROCEDURE
Set the pliers following the correct procedure shown in END-STOP PLIER SETTING p. 15.

⚠WARNING

Personal injury can result when installing snap ring. The appropriate safety equipment must be worn. To avoid injury to your eyes, wear protective glasses during this procedure.

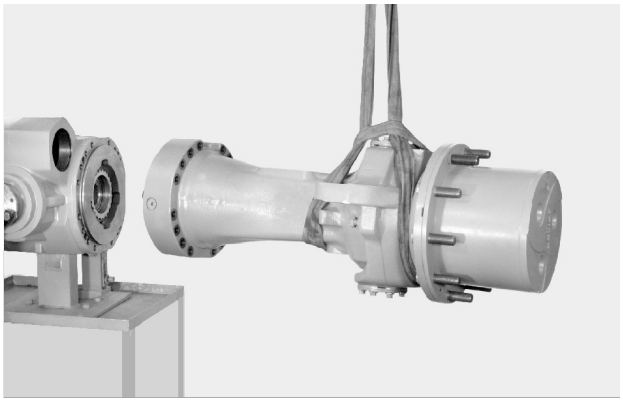

FIGURE 52: Install the complete arm.

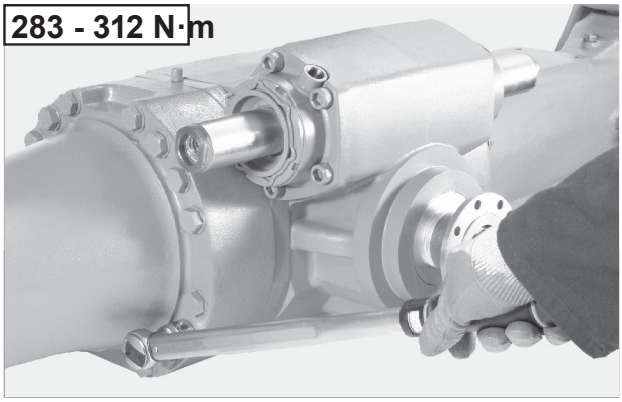

FIGURE 53: Torque wrench setting: 283 - 312 N·m.

NOTE:

Tighten using the criss-cross method.

SPECIAL TOOLS

T1

P/N: 2379

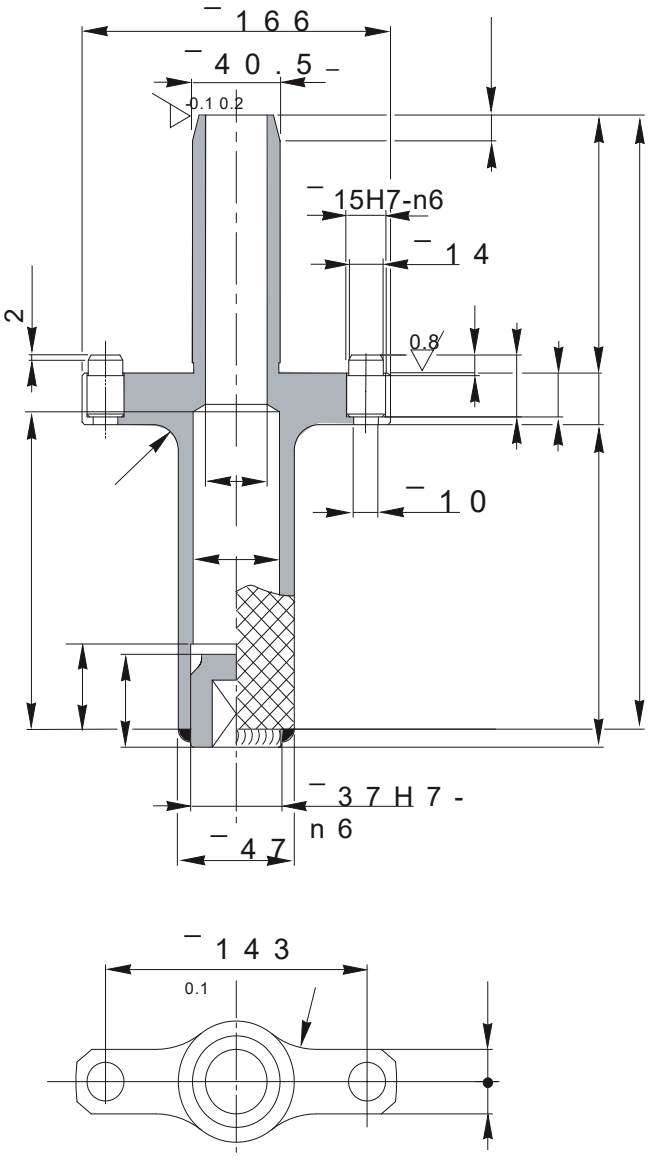

T2

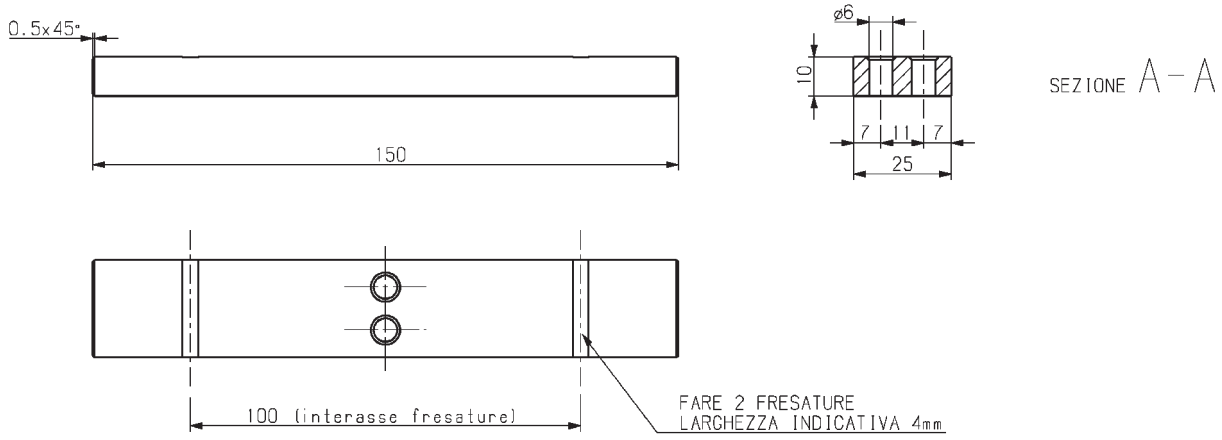

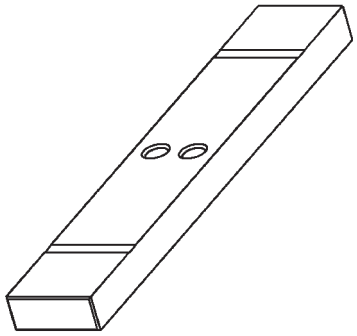

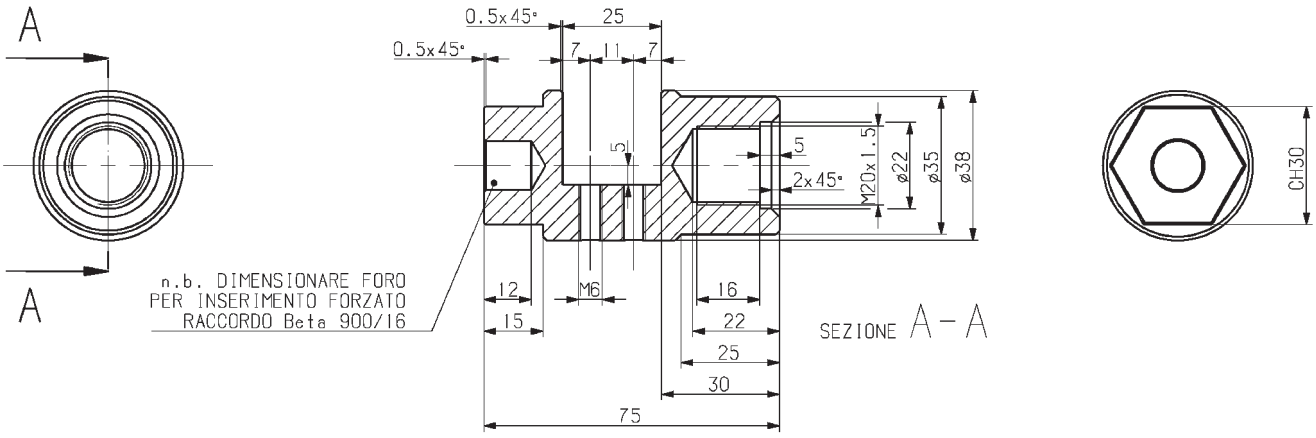

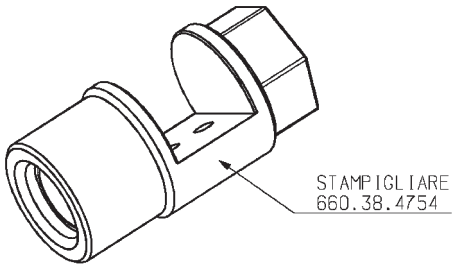

SMUSSI NON QUOTATI 1x45°

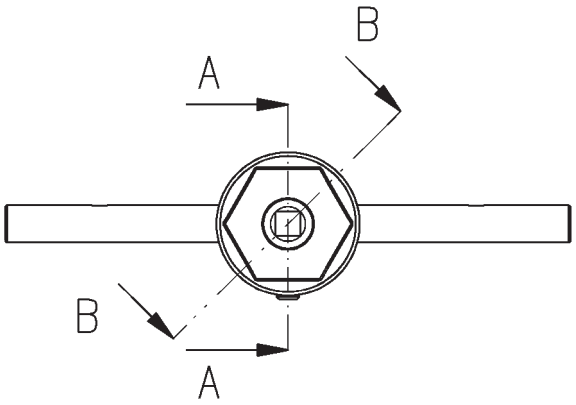
B
A
B
A

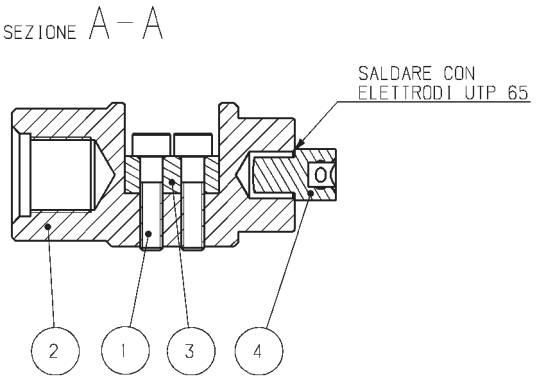
SEZIONE A – A
SALDARE CON
ELETTRODI UTP 65
2
1
3
4

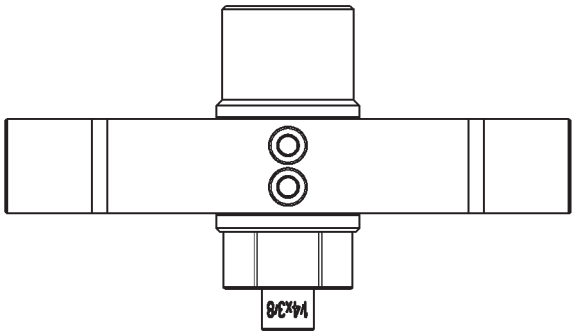

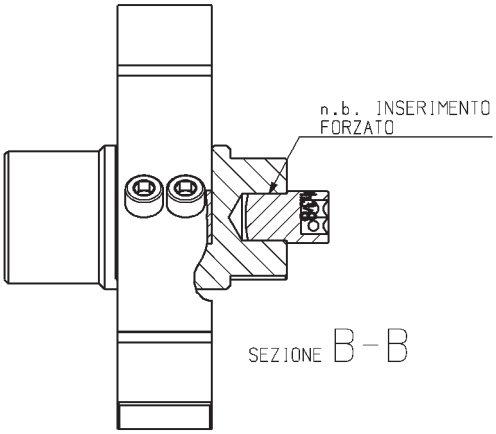
n.b. INSERIMENTO
FORZATO
SEZIONE B – B

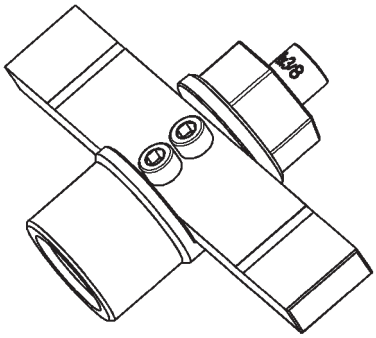

BEVEL PINION

EXPLODED VIEW

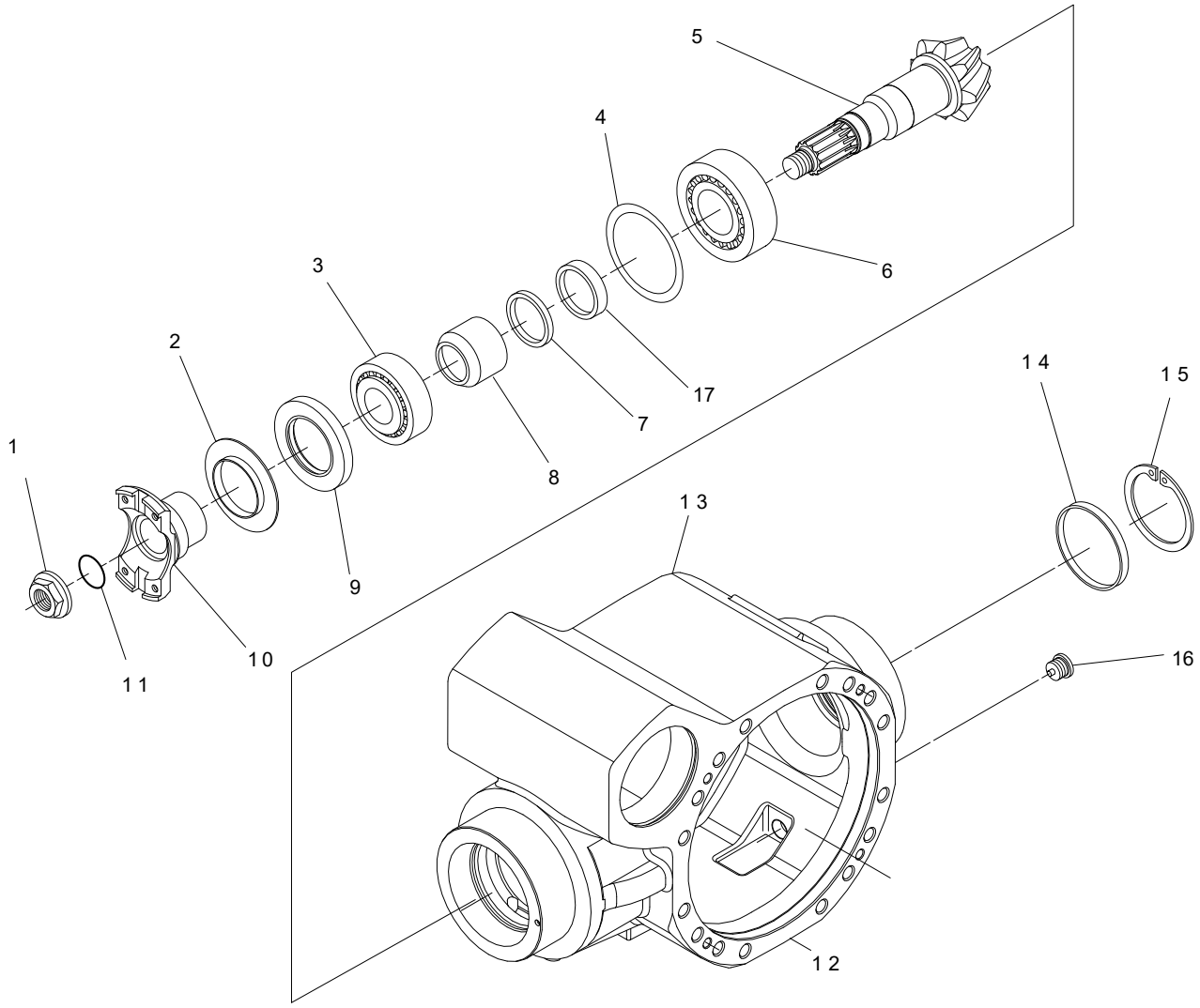

DISASSEMBLY

⚠CAUTION

Before draining oil, release the internal pressure, for details see OIL DRAINING MANDATORY PROCEDURE p. 14.

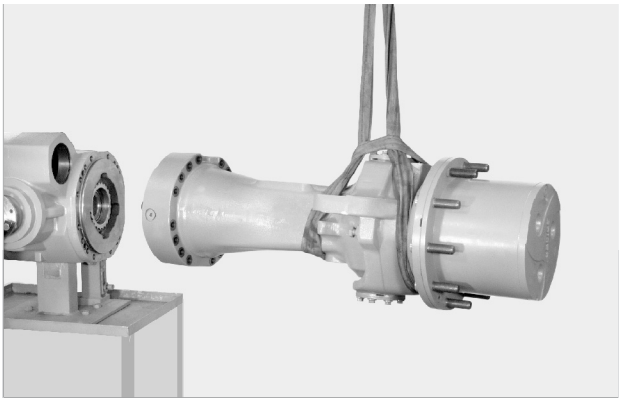

FIGURE 1: Remove both axle arms.

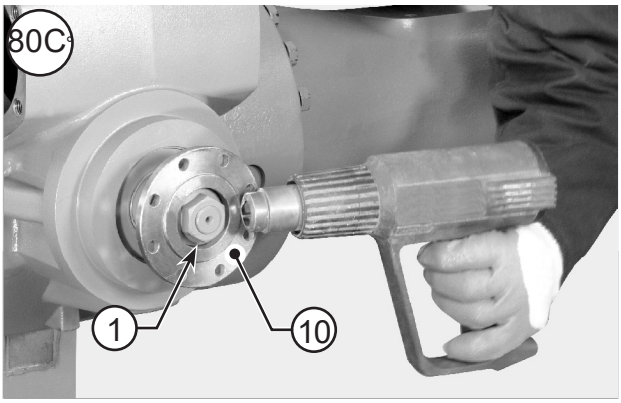

FIGURE 2: If disassembly is difficult, heat the check nut (1) of the flange (10) to 176 °F [80 °C].

NOTE:

Heat will loosen the setting of Loctite on the nut (1).

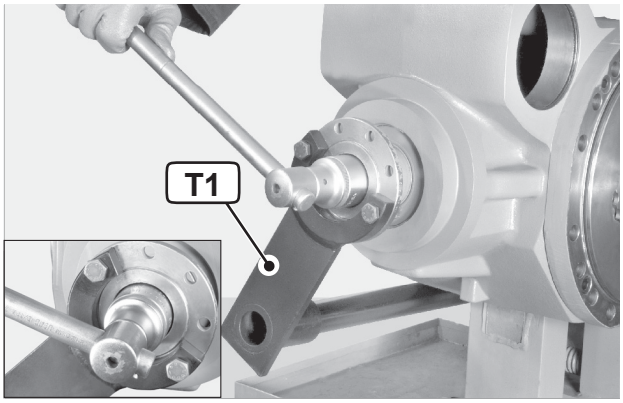

FIGURE 3: Position tool T1 (See drawing T1 p. 104), so as to avoid pinion rotation.
Loosen and remove the nut (1) and o-ring (11).

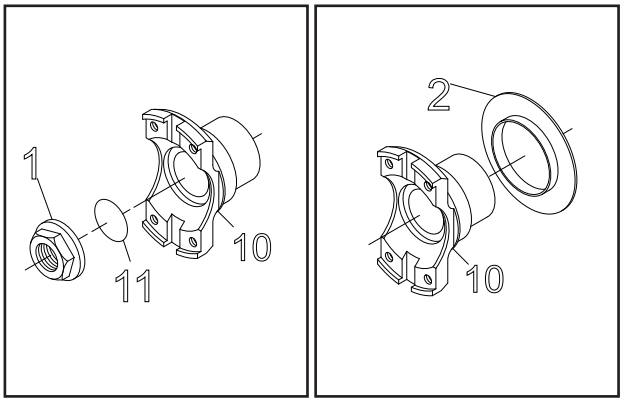

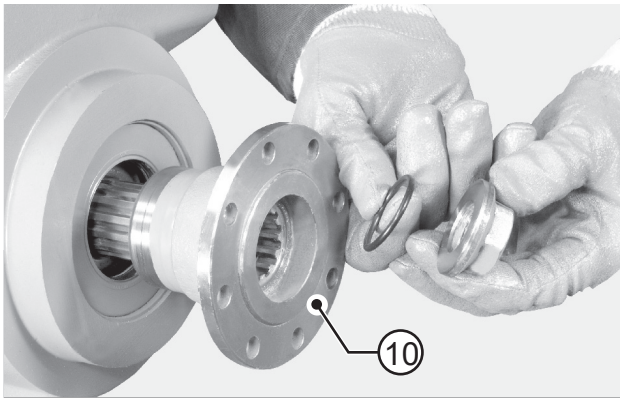

FIGURE 4: Remove the flange (10) complete with guard (2).

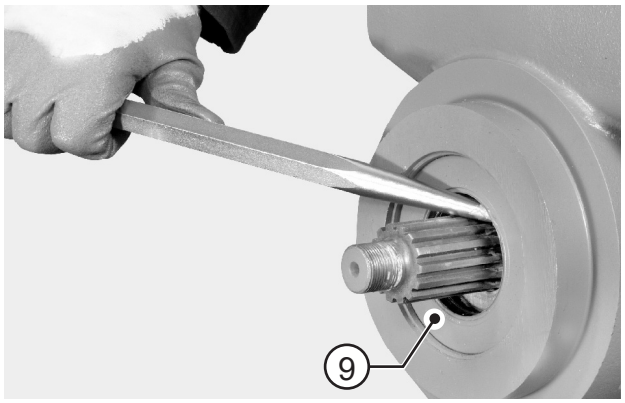

FIGURE 5: Remove the sealing ring (9).

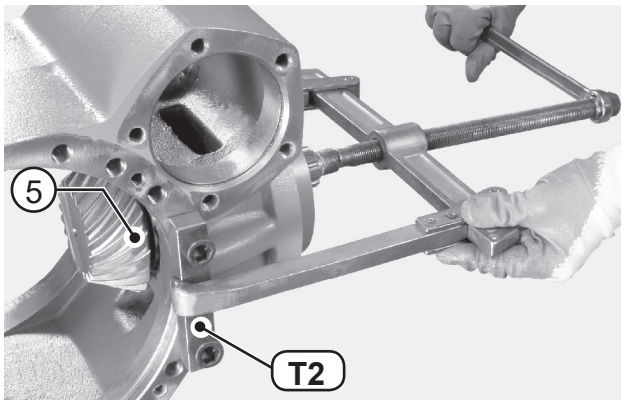

FIGURE 6: Apply blocks T2 (See drawing T2 p. 105) and, using a puller, extract the pinion (5) complete with the internal bearing (6), the spacer (8), and calibrated spacer (4, 7).

NOTE:

The thrust blocks of the bearings remain in the central housing (12).

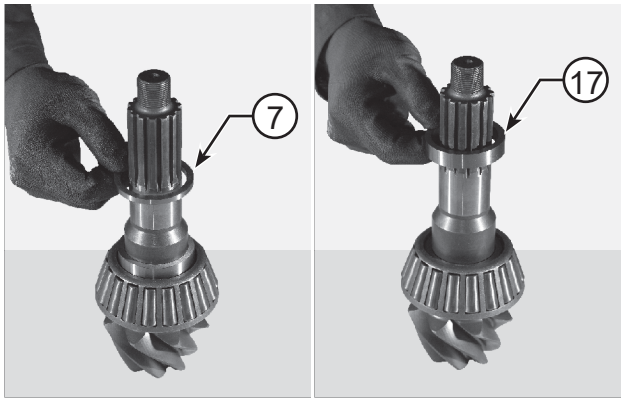

FIGURE 7: Remove spacer (17) and calibrated spacer (7).

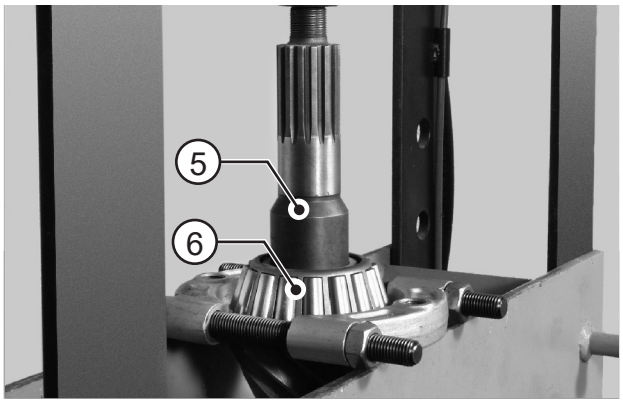

FIGURE 8: Using a puller and a press, remove the inner bearing (5) from the pinion (6).

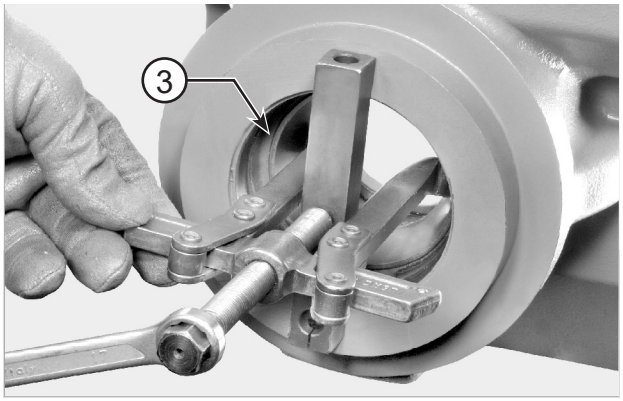

FIGURE 9: Remove the thrust block of the external bearing (3).

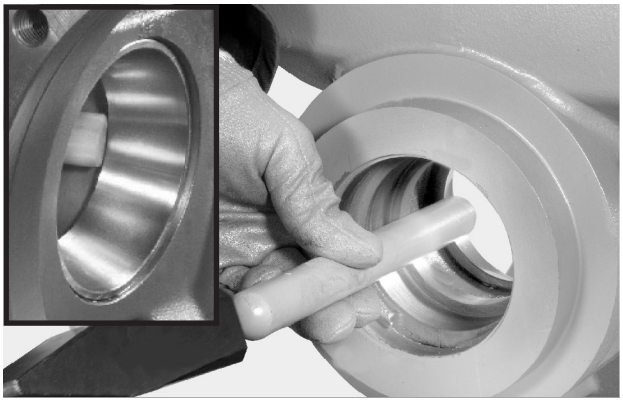

FIGURE 10: Insert a drift in the appropriate holes.

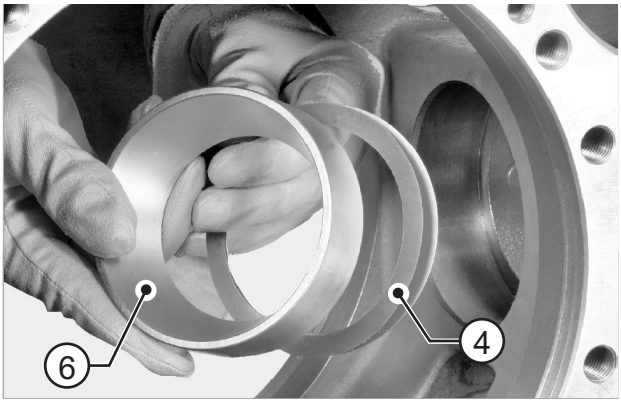

FIGURE 11: Remove the thrust block of the internal bearing (6) as well as the shim washers (4).

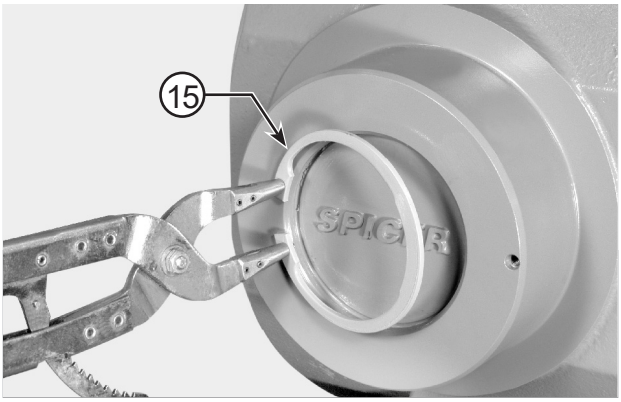

FIGURE 12: Remove the snap ring (15).

⚠CAUTION

MANDATORY PROCEDURE
Set the pliers following the correct procedure shown in END-STOP PLIER SETTING p. 15.

⚠WARNING

Removal of the snap rings can cause personal injuries. You must wear appropriate safety equipment. To avoid injury to eyes, wear eye protection equipment.

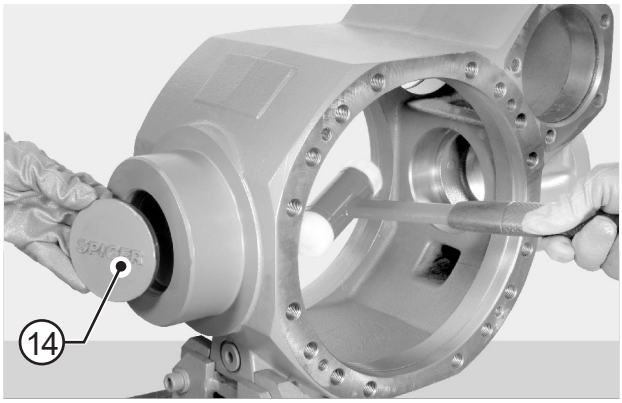

FIGURE 13: Remove the cap (14).

ASSEMBLY

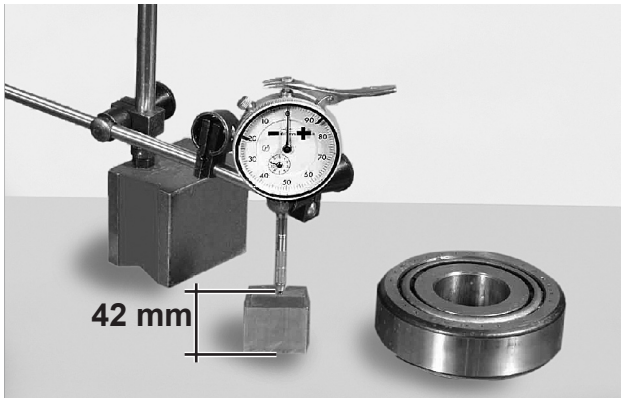

FIGURE 14: CALCULATING PINION CENTER stud
Using a faceplate, reset a dial indicator "DG" on a calibrated block (whose known thickness is 42 mm.).
Preload the gauge by about 3 mm.

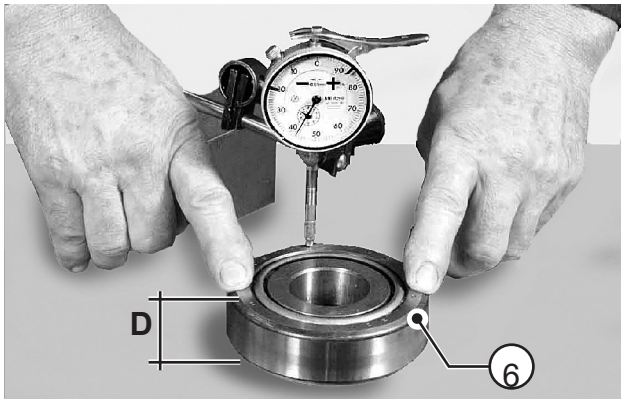

FIGURE 15: Bring inner bearing (6), complete with thrust block, under gauge "DG". EXAMPLE: 42 +0.5 = 42.5 = "D".

⚠CAUTION

Press the thrust block centrally and carry out several measurements by rotating the thrust block.

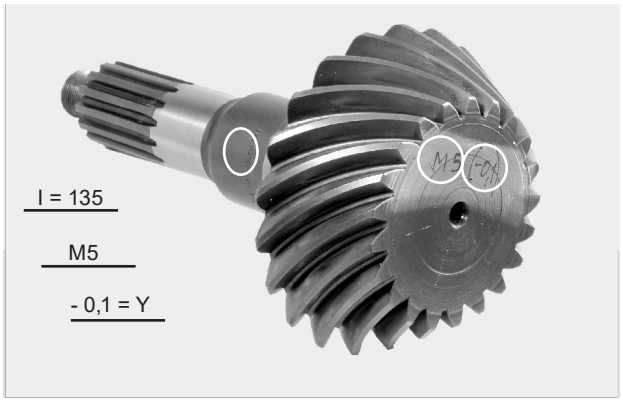

FIGURE 16: Check nominal dimension "I" as marked on the pinion. Add up to or subtract from "I" the variation indicated as "Y" to obtain the actual center stud "I".
EXAMPLE: I = 135 - 0.1 = 134.9

NOTE:

M5 = Match part number

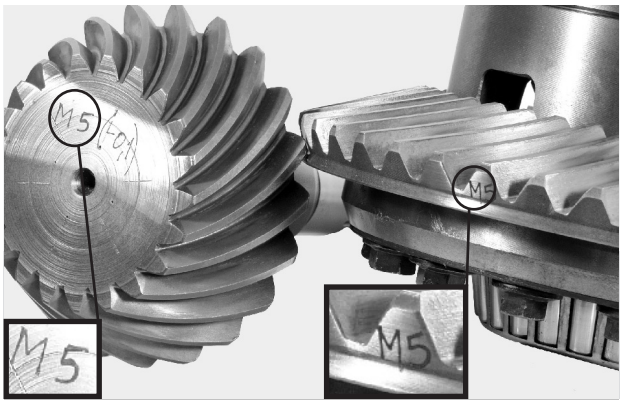

FIGURE 17: Calculate shims "S" for insertion under the thrust block of the inner bearing using the following formula:
S = 178 - (I+D) where: 178 =
fixed dimension;
I = actual pinion center stud;
D= total bearing thickness;
EXAMPLE: S = 178 - (134.9 + 42.5) = 0.6 mm.

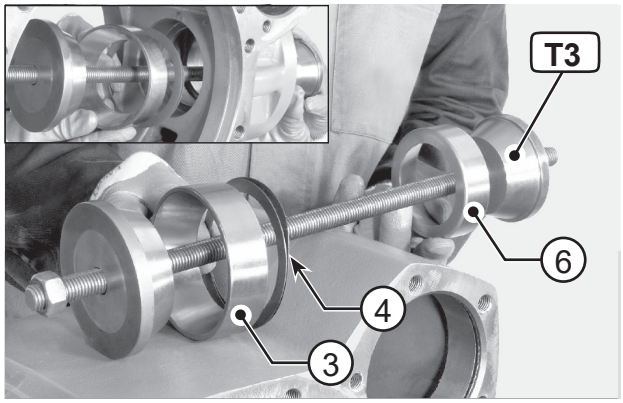

FIGURE 18: Using special tool T3 (See drawing T3 p. 105) partially insert the thrust block of the bearings (3, 6) and shims (4).

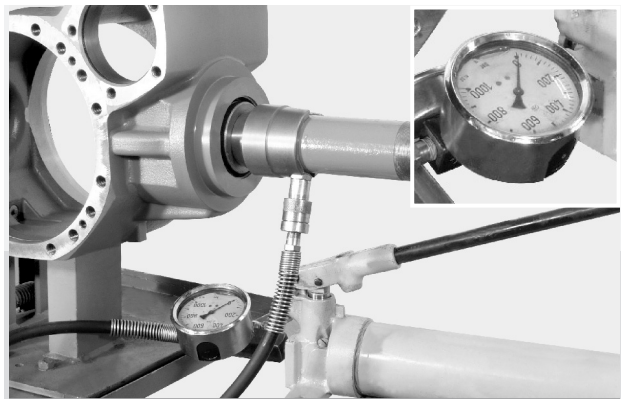

FIGURE 19: Connect the tension rod to the press and move the thrust block of bearings (3, 6) into the seats. Disconnect the press and remove the tension rod.

NOTE:

Before starting the next stage, make sure that the thrust block has been completely inserted into its seat.

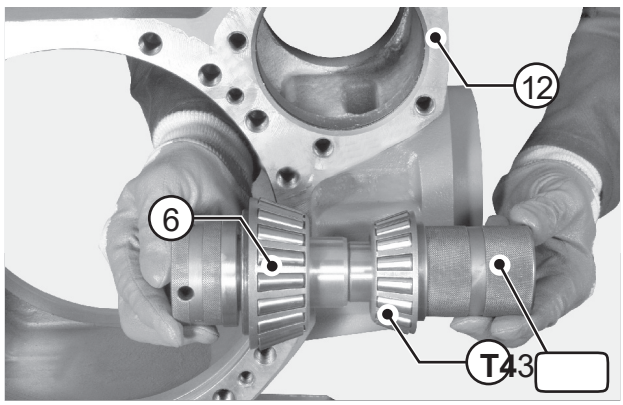

FIGURE 20: CALCULATING PINION BEARINGS ROLLING TORQUE

Introduce tool T4 (See drawing T4 p. 106) complete with bearings (3, 6) into the central housing (12); tighten by hand until a rolling torque is definitely obtained.

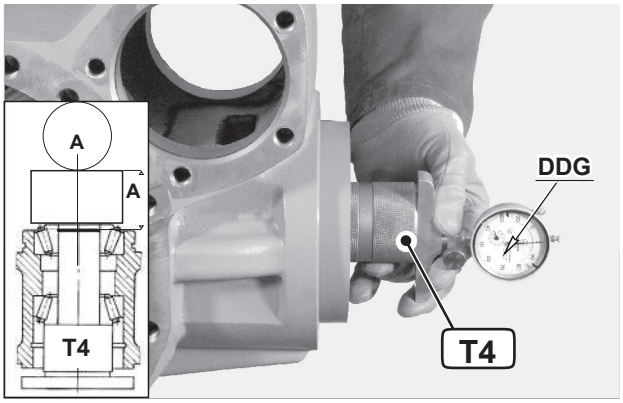

FIGURE 21: Introduce the tracer of a depth gauge "DDG" into either side hole of tool T4 (See drawing T4 p. 106). Reset the gauge with a preload of about 3 mm.

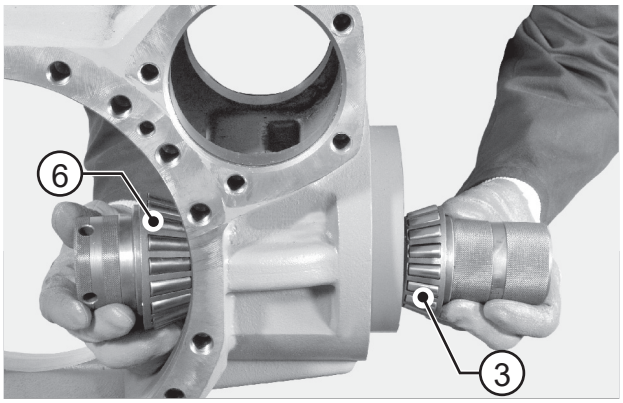

FIGURE 22: Remove the gauge and take out tool and bearing kits from the central housing. Reinstall every part, also introducing a spacer between bearings (3, 6). Tighten the entire pack by hand.

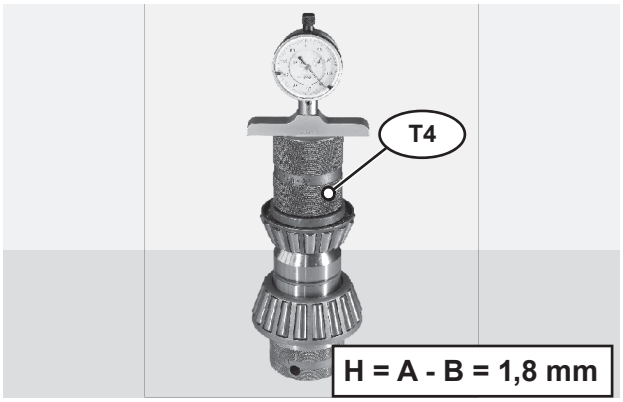

FIGURE 23: Introduce depth gauge "DDG" in tool T4 (See drawing T4 p. 106) and measure deviation "H" from the previous reset.
EXAMPLE: H = A - B = 1,8 mm.

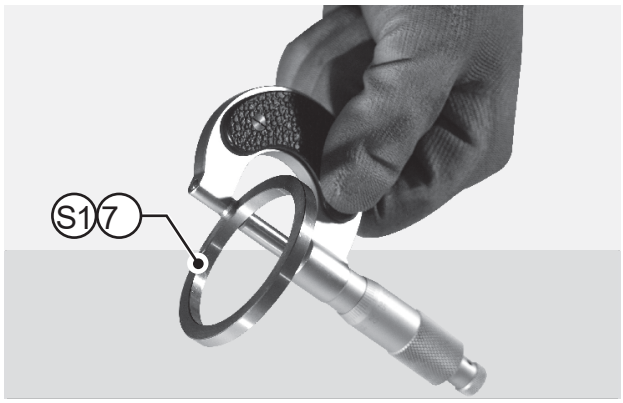

FIGURE 24: Deviation "H" must be added to a set value of 0.12--0.13 mm (X) to obtain calibrated spacer "S1" (7) for insertion between inner bearing (6) and spacer (8). Dimension "S1" must be rounded off to the higher 5/100. EXAMPLE: S1 = H + X = 1,8 + (0.12 - 0.13) = 1,92 - 1,93 mm.

FIGURE 25: Heat the inner bearing (6) to about 212 °F [100 °C] and fit it onto the pinion (5).

NOTE:

Once the bearing has cooled down, lightly lubricate bearing (6) with SAE85W90 oil.

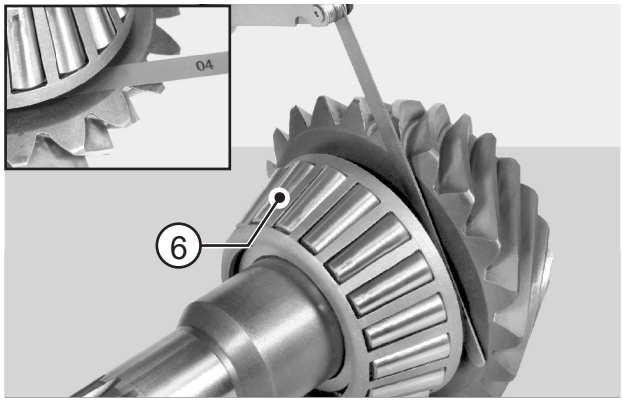

FIGURE 26: Make sure that the bearing (6) is well set.

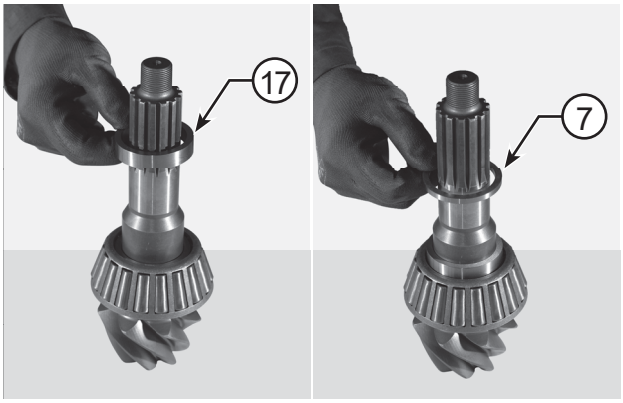

FIGURE 27: Refer and keep to the positions marked during disassembly.

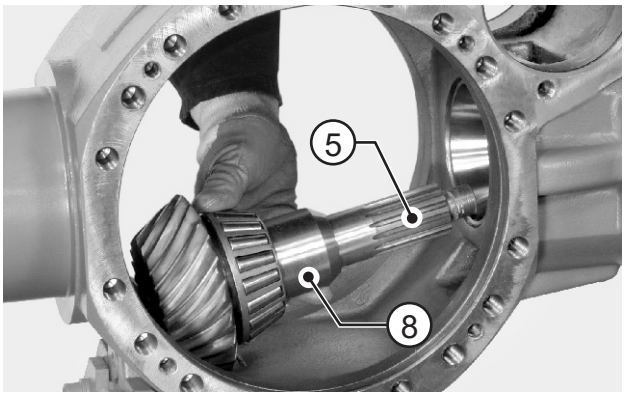

FIGURE 28: Fit the pinion (5), calibrated spacer "S1" (7) and spacer (8) in the central housing (12).

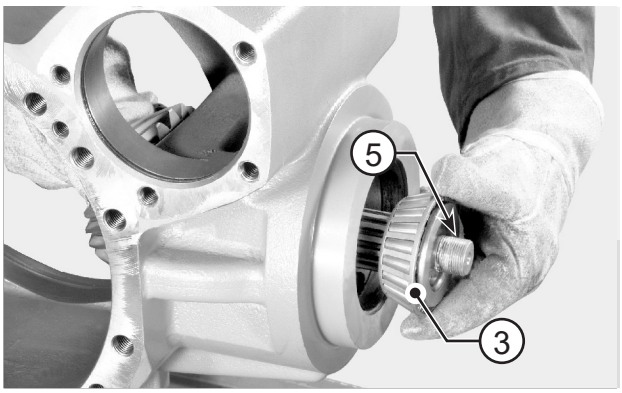

FIGURE 29: Heat the external bearing (3) to a temperature of about 212 °F [100 °C] and fit it on to the pinion (5) to complete the pack as shown in the figure above.

NOTE:

Lightly lubricate bearing (3) with SAE85W90 oil.

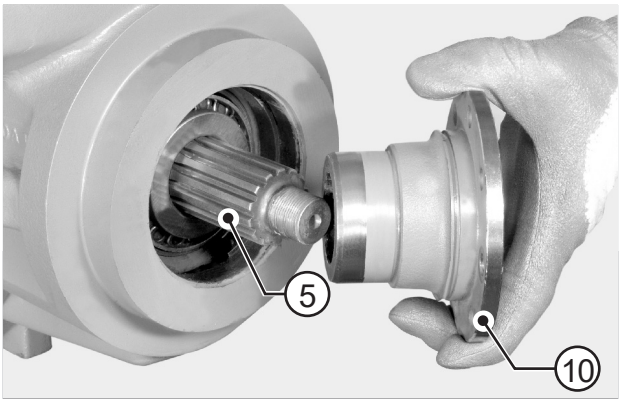

FIGURE 30: Install the flange (10) onto the pinion (5) without the sealing ring.

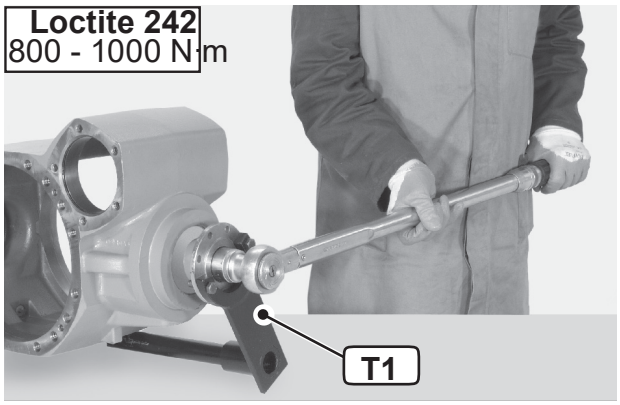

FIGURE 31: Apply wrench to the ring nut (1) and bar-hold T1 (See drawing T1 p. 104) to the pinion (5). Lock the wrench T1 (See drawing T1 p. 104) and rotate the pinion using a torque wrench, up to a minimum required torque setting of 800 - 1000 N·m.

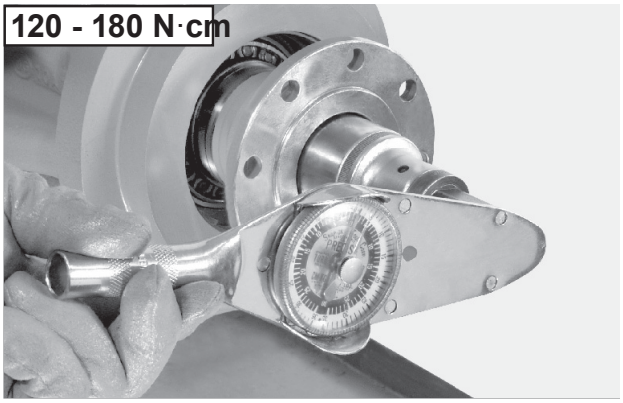

FIGURE 32: Apply onto the pinion (5) the bar-hold and using a torque meter, check the torque of the pinion (5). Torque: 120 - 180 N·cm

⚠CAUTION

If torque exceeds the maximum value, then the size of calibrated spacer "S1" (7) between the bearing (6) and the spacer (8) needs to be increased. If torque does not reach the set value, increase the torque setting of the ring nut (1) in different stages to obtain a maximum value of 800 - 1000 N·m. If torque does not reach the minimum value, then the size of calibrated spacer "S1" (7) needs to be reduced. When calculating the increase or decrease in size of calibraterd spacer "S1", bear in mind that a variation of calibrated spacer (4) of 0.01 mm corresponds to a variation of 60 N·cm in the torque of the pinion (5).

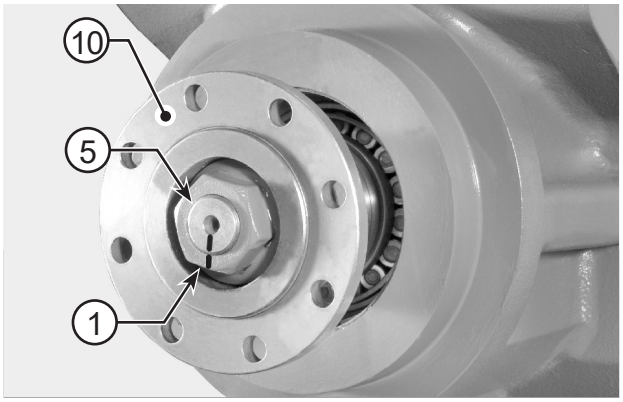

FIGURE 33: Make positional marks across nut (1) and pinion (5) tang; then remove nut and flange (10)

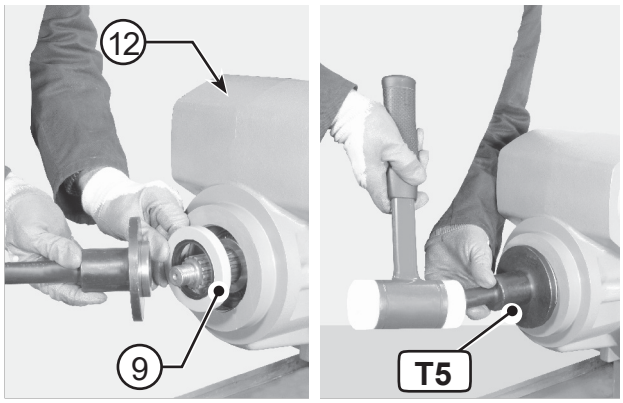

FIGURE 34: Apply Arexons rubber cement to the outer surface of the new seal ring (9) and fit ring in the central housing (12) using driver T5 (See drawing T5 p. 107).

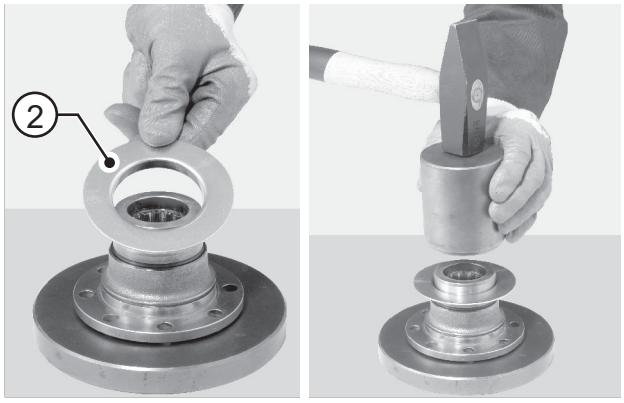

FIGURE 35: Fit the safety flange (2).

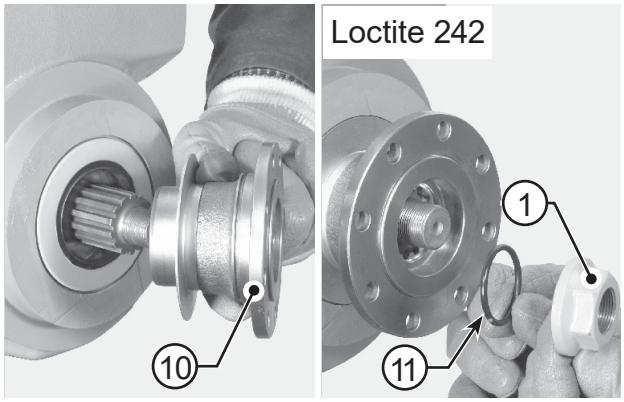

FIGURE 36: Oil seal ring lips and install flange (10). Install o-ring (11) and apply Loctite 242 to pinion tang; tighten nut (1).

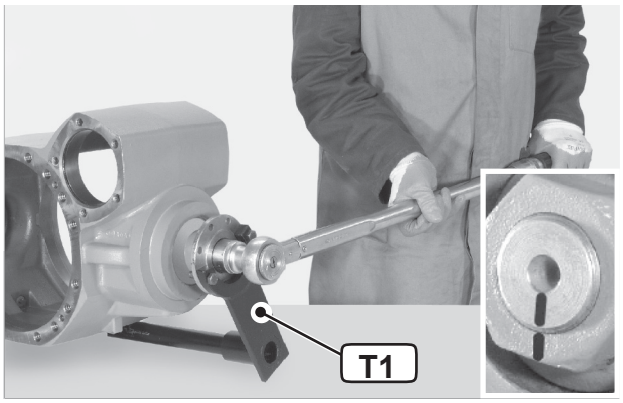

FIGURE 37: Tighten the nut until the match marks line up.

SPECIAL TOOLS

T1

P/N: 2308

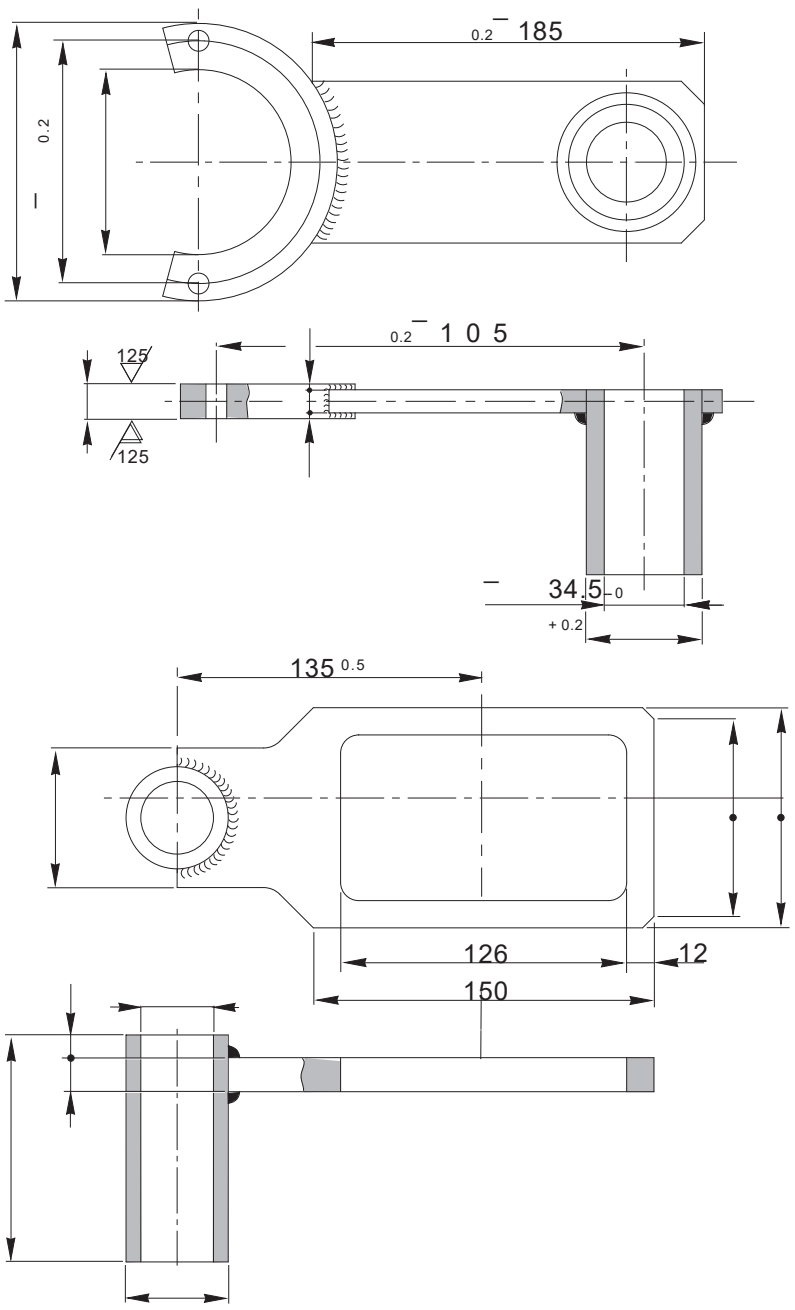

T2

P/N: 2381

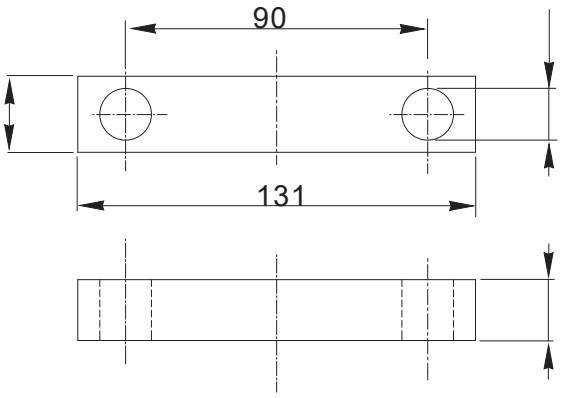

T3

P/N: 2377

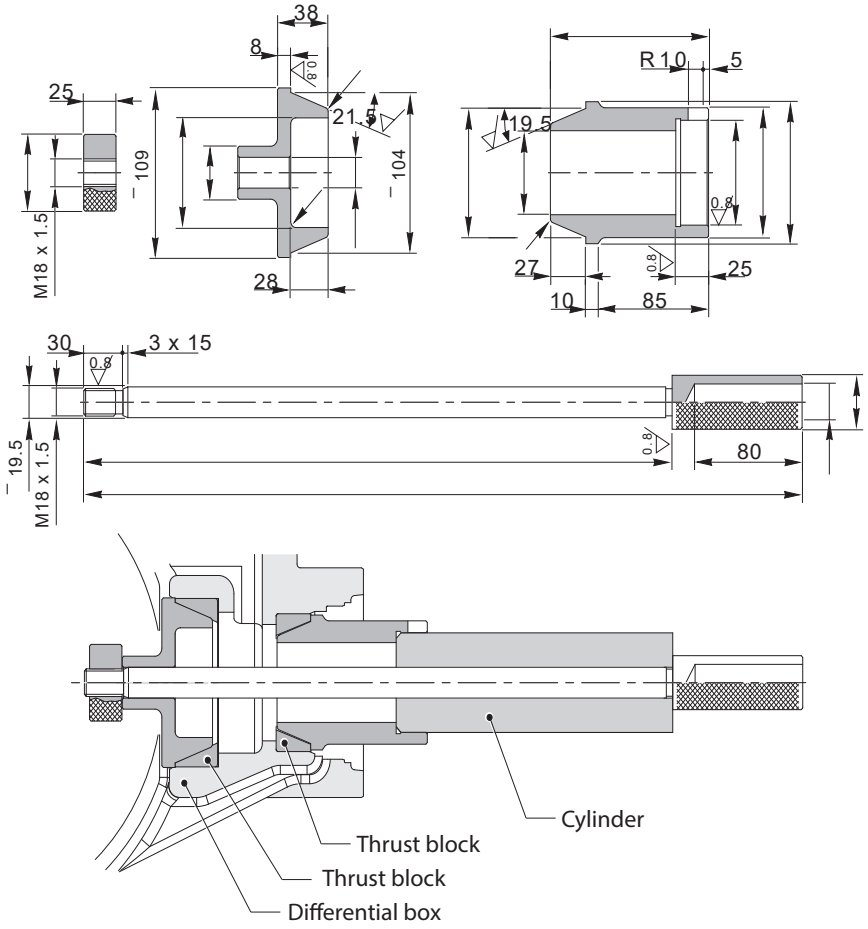

T4

P/N: 2374

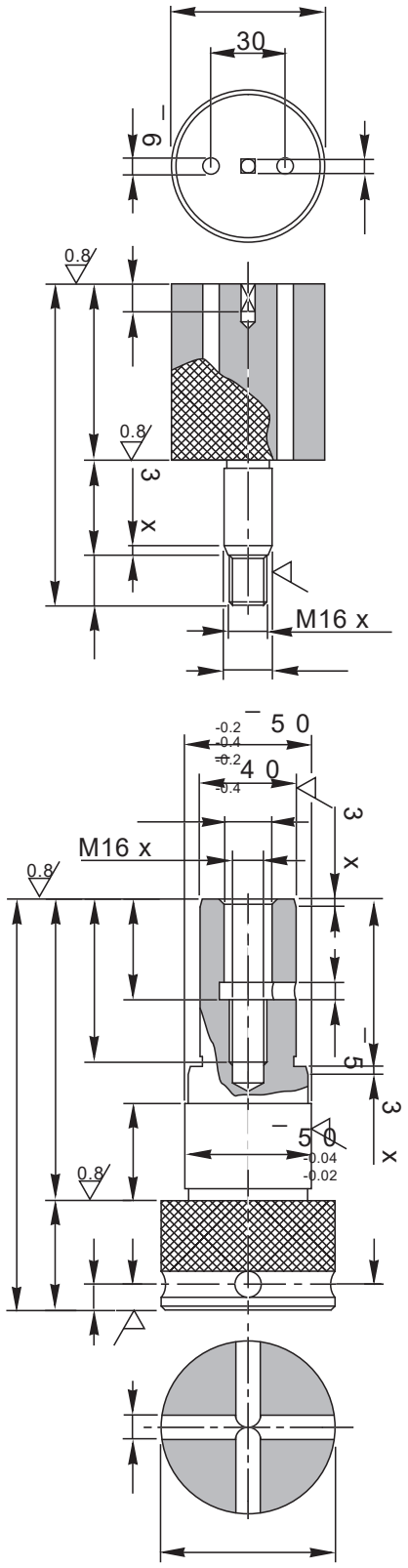

LIMITED SLIP DIFFERENTIAL UNIT

EXPLODED VIEW

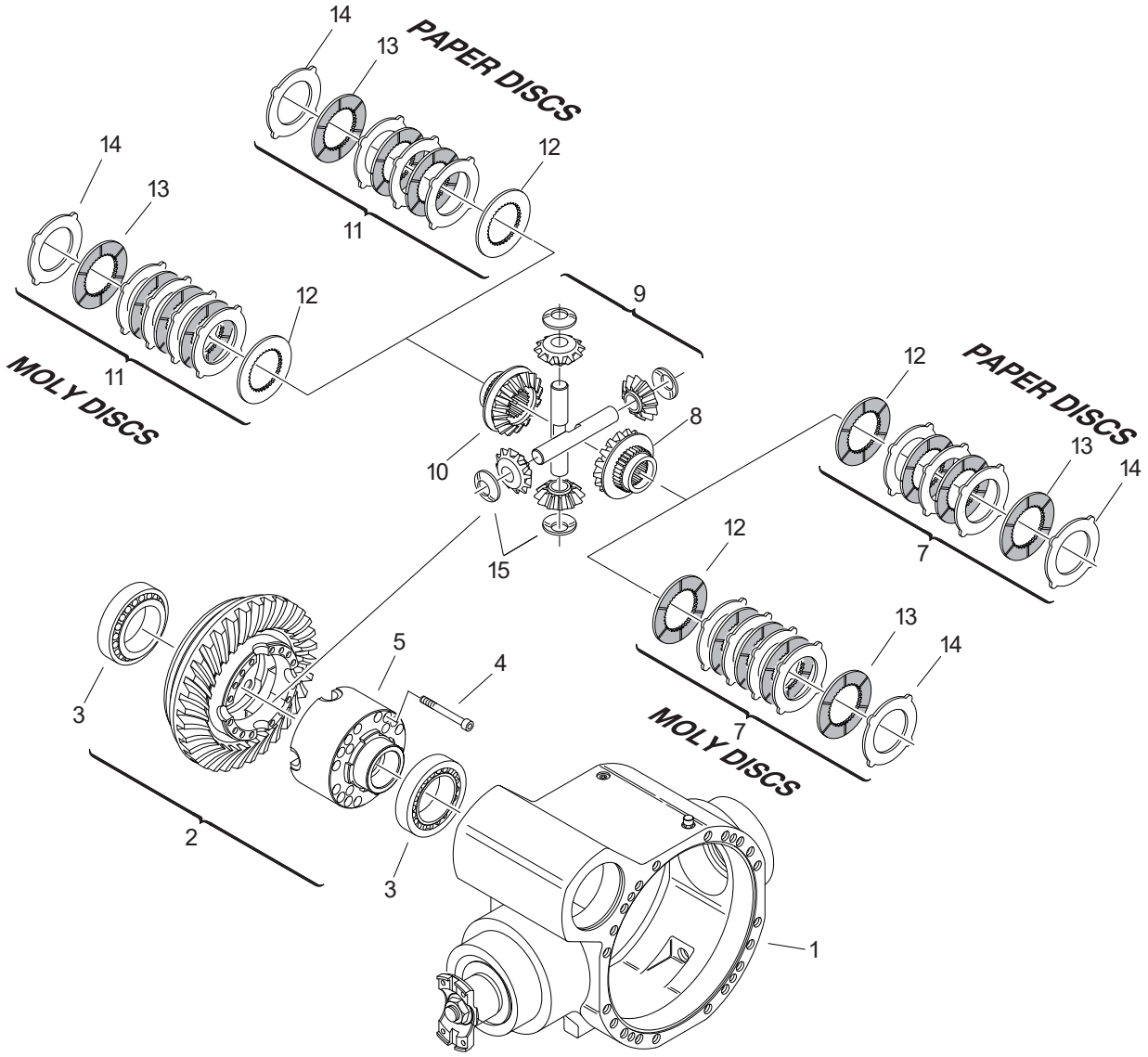

DISASSEMBLY

⚠CAUTION

Before draining oil, release the internal pressure, for details see OIL DRAINING MANDATORY PROCEDURE p. 14.

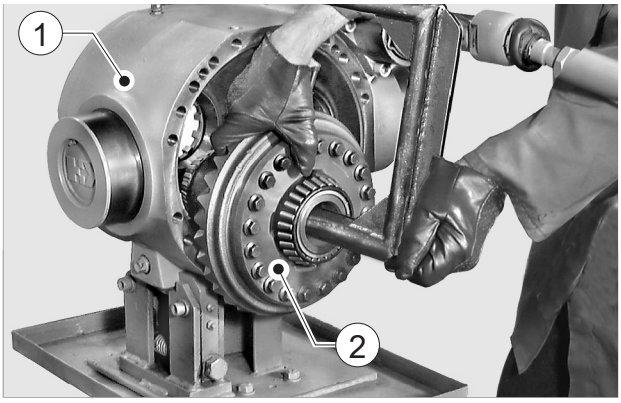

FIGURE 1: Remove the whole differential unit (2) from the main body (1).
(For details, see DIFFERENTIAL UNIT p.

⚠CAUTION

The following section includes clutch replacement procedures only; for gear ring replacement, see DIFFERENTIAL UNIT p. 79.

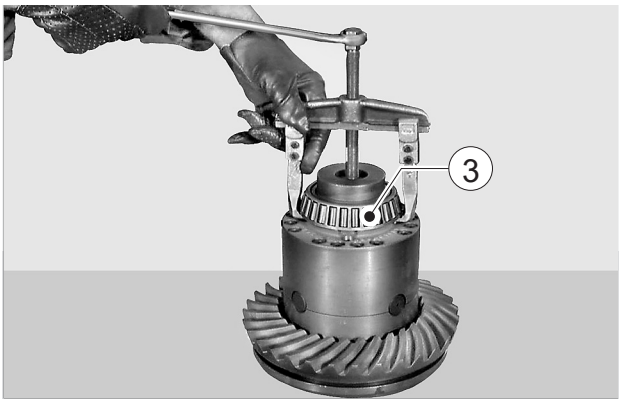

FIGURE 2: Using a puller, remove bearing (3).

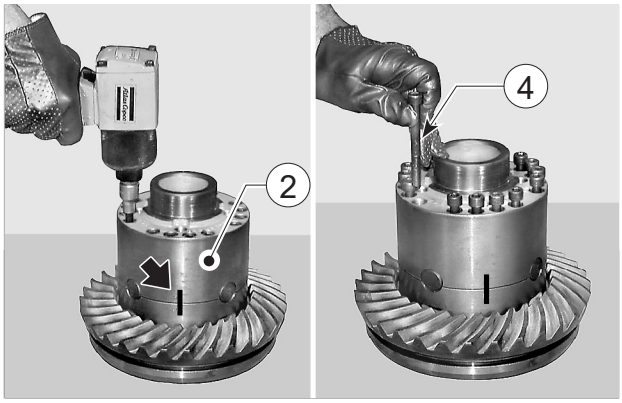

FIGURE 3: Make positional match marks on the half boxes of the differential gear (2); loosen and pull out joining screws

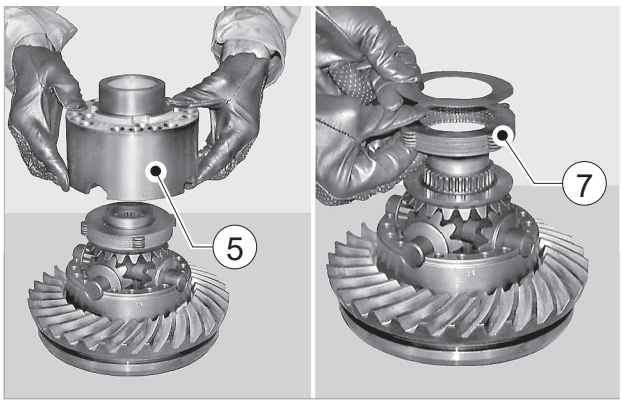

FIGURE 4: Remove the upper half box (5) and clutch pack

⚠CAUTION

Check and write down the amount of differential discs.
In function of this quantity deduce the type of material:
8 discs - friction material "PAPER" 10 discs - friction material "MOLY"

⚠CAUTION

If the clutch pack does not need replacing, avoid swapping discs position.

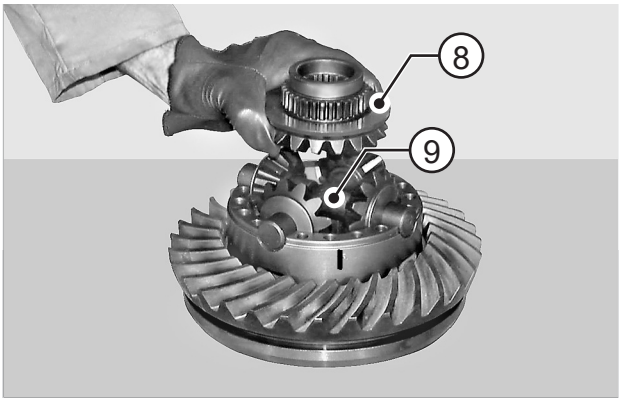

FIGURE 5: Remove the crown wheel (8) and planetary gears set (9).

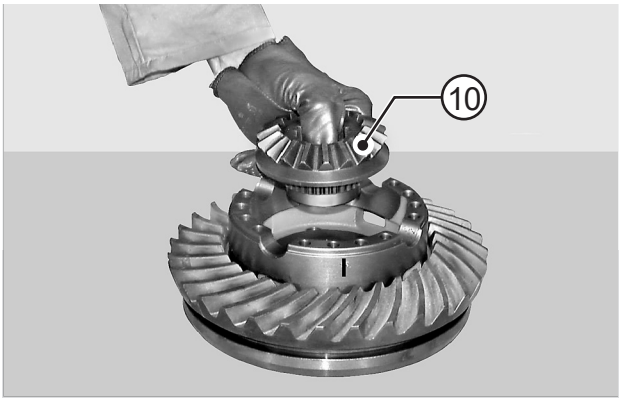

FIGURE 6: Remove the 2nd planetary gear (10).

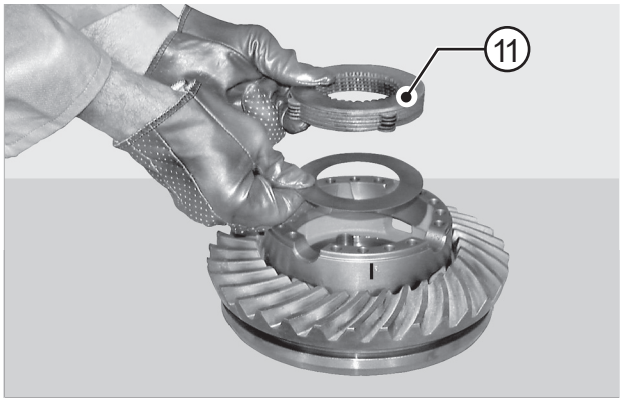

FIGURE 7: Remove the 2nd clutch pack (11) .

⚠CAUTION

Check and write down the amount of differential discs.
In function of this quantity deduce the type of material:
8 discs - friction material "PAPER" 10 discs - friction material "MOLY"

⚠CAUTION

If the clutch pack does not need replacing, avoid swapping discs position.

ASSEMBLY

"MOLY" FRICTION DISCS

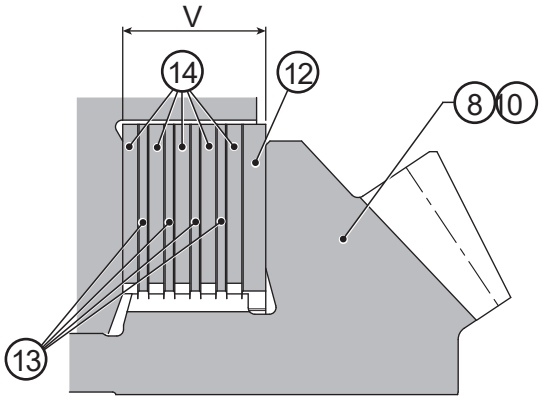

FIGURE 8: Check the disc pack thickness "V" applying 3000 N ± 5%.
"V" measurement must be 17,4 ± 0,08 mm.

⚠CAUTION

Dip the complete disc pack in oil (with LS additive) at least one hour before to assembly, for details about oil see MAINTENANCE INTERVALS p. 16.

NOTE:
Check the total dimension of the disc pack before installing, if this measurement does not respect the predifined value install a new disc pack.
New disc pack doesn't need measurement, because, supplied as subassembly, they already respect the predifined value.
It is mandatory to install discs of the same material of the original installation.

"PAPER" FRICTION DISCS

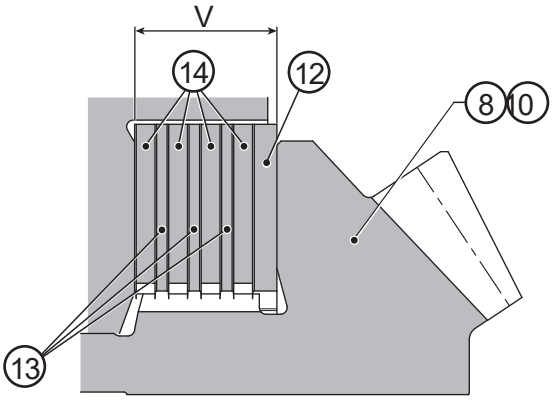

FIGURE 9: Check the disc pack thickness "V" applying 3000 N ± 5%.
"V" measurement must be 17,35 - 17,50 mm.

⚠CAUTION

Dip the complete disc pack in oil (with LS additive) at least 24 hours before to assembly, for details about oil see MAINTENANCE INTERVALS p. 16.

NOTE:
Check the total dimension of the disc pack before installing, if this measurement does not respect the predifined value install a new disc pack.
New disc pack doesn't need measurement, because, supplied as subassembly, they already respect the predifined value.
It is mandatory to install discs of the same material of the original installation.

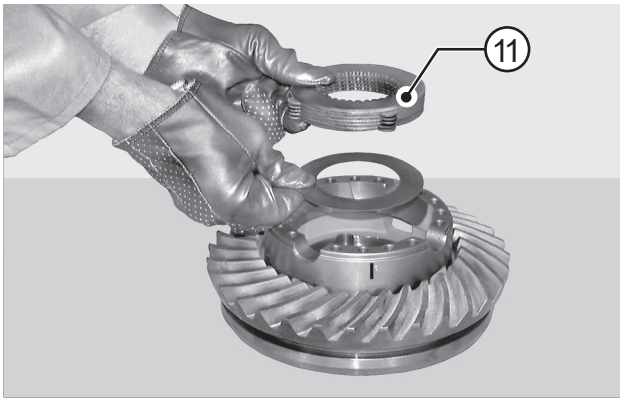

FIGURE 10: Fit the clutch pack (11) in the half-box.

⚠CAUTION

When installing the increased shim, place shim so that it leans against the crown wheel (8, 10).

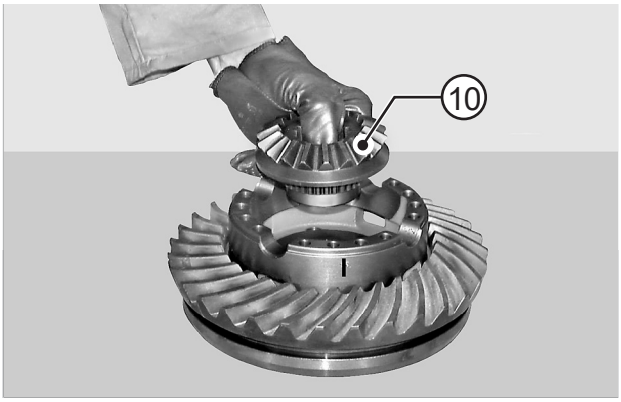

FIGURE 11: Install planetary gear (10).

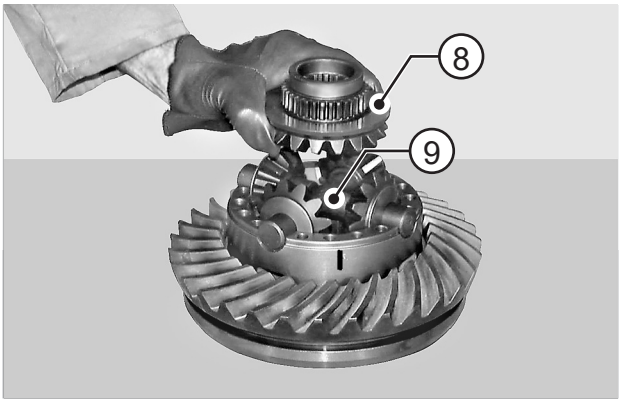

FIGURE 12: Fit the planetary gear set (9).
Mount second planetary gear (8).

NOTE:

Make sure that spherical thrust washers (15) are present.

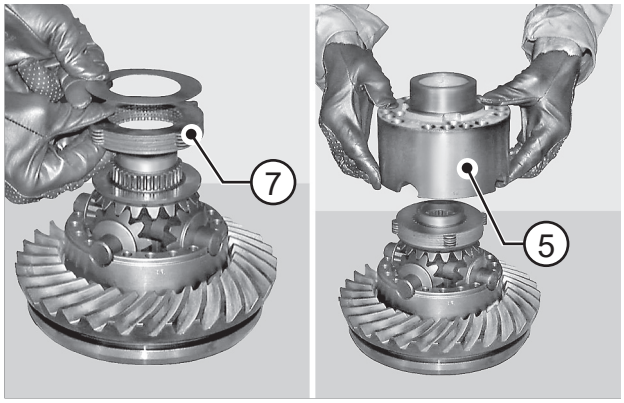

FIGURE 13: Fit increased shim (12), clutch pack (7) onto the crown wheel (8).
Fit the upper half box (5) and make sure that the match marks line up.
Complete the assembling operation and install the differential unit following the procedures described in the first part of the manual under section DIFFERENTIAL UNIT p. 79.

SWINGING SUPPORT

EXPLODED VIEW

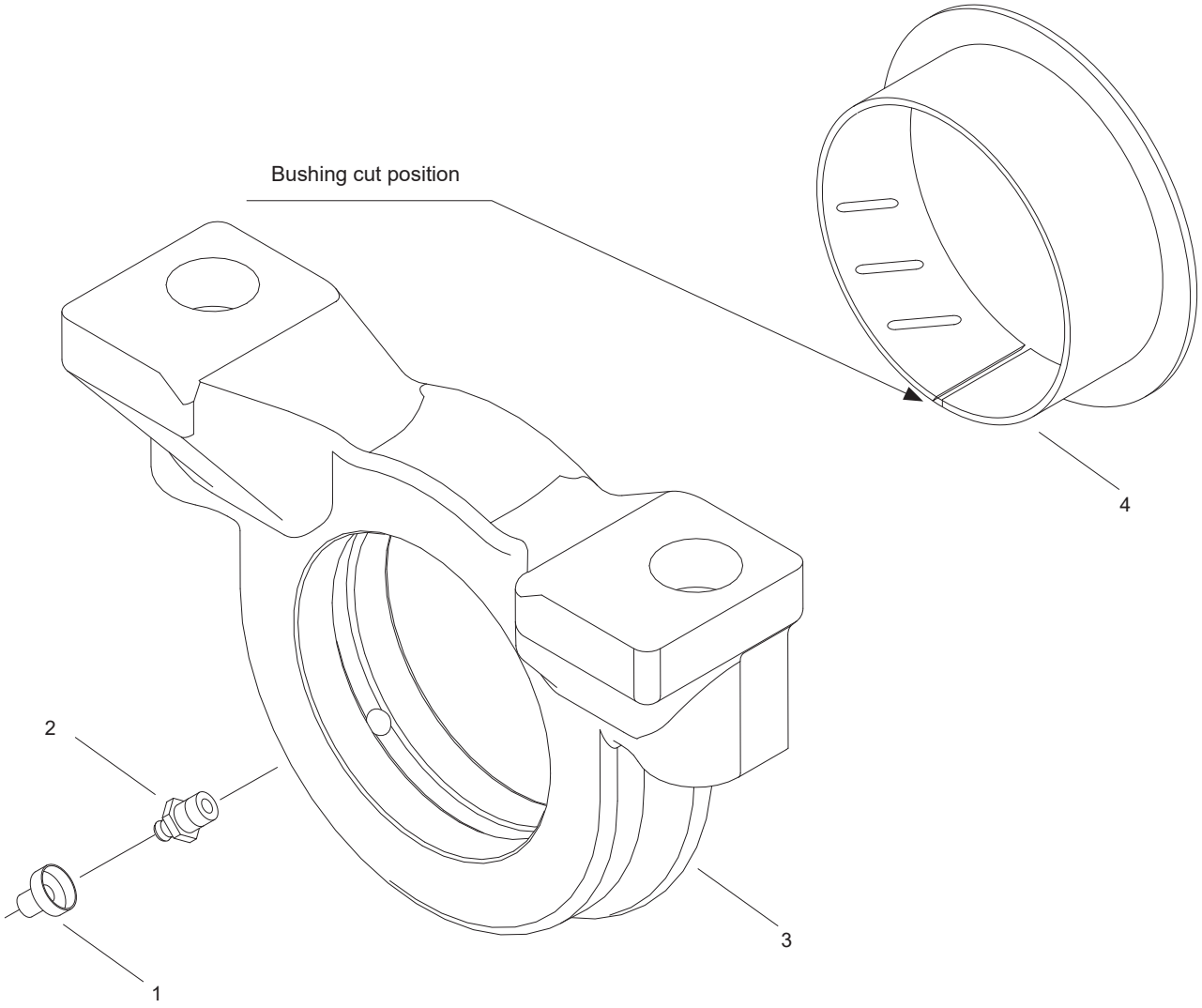

DISASSEMBLY

⚠CAUTION

Before draining oil, release the internal pressure, for details see OIL DRAINING MANDATORY PROCEDURE p. 14.

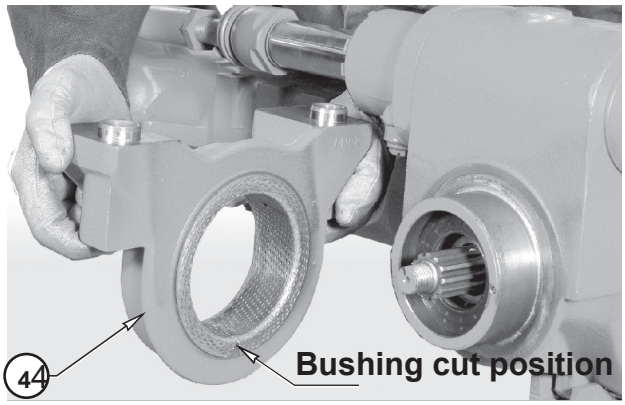

FIGURE 1: Remove the swinging support (4).

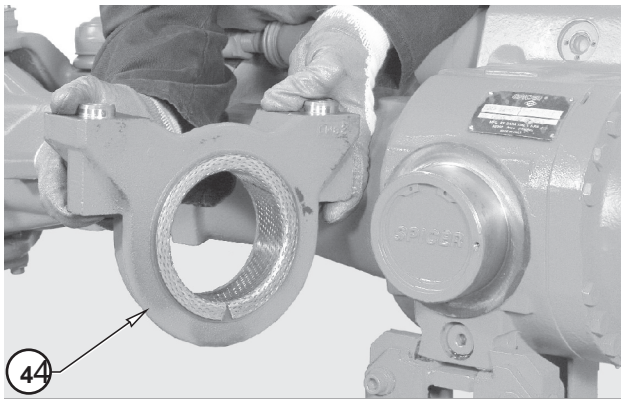

FIGURE 2: Remove the swinging support (4) on the side opposite the drive.

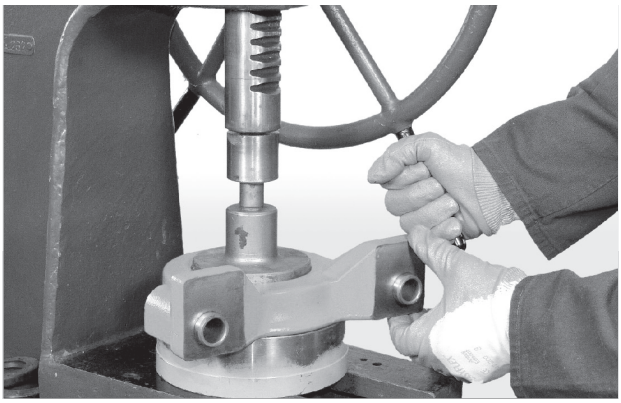

FIGURE 3: Position the swinging support (4) under a press and remove the complete bushing (3).

ASSEMBLY

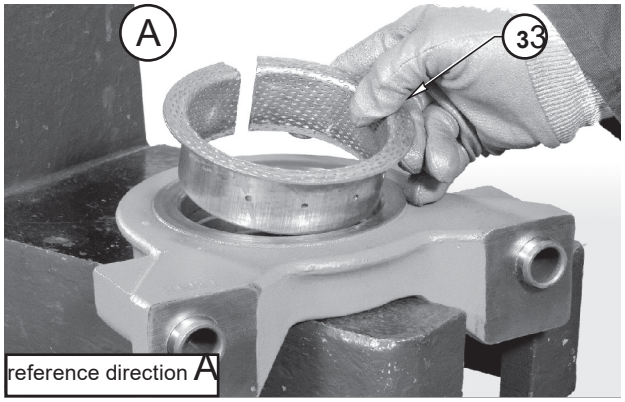

FIGURE 4: If the bushing (3) is worn and needs replacing, write down the assembly side of the connection notch "A".

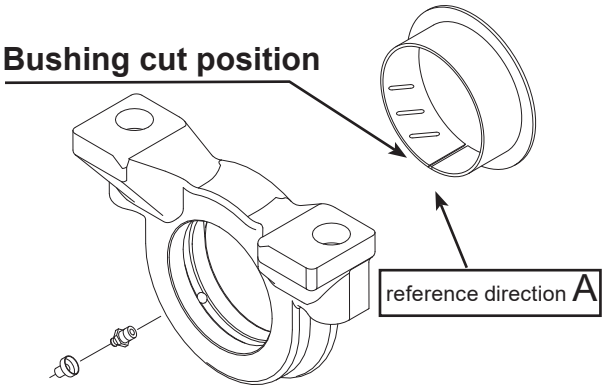

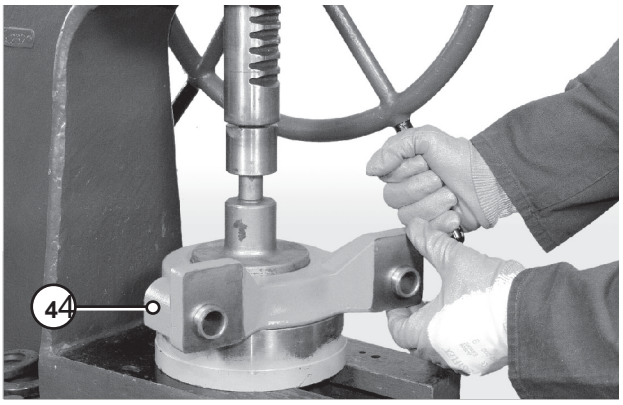

FIGURE 5: Position the swinging support (4) under a press and insert the complete bushing (3).

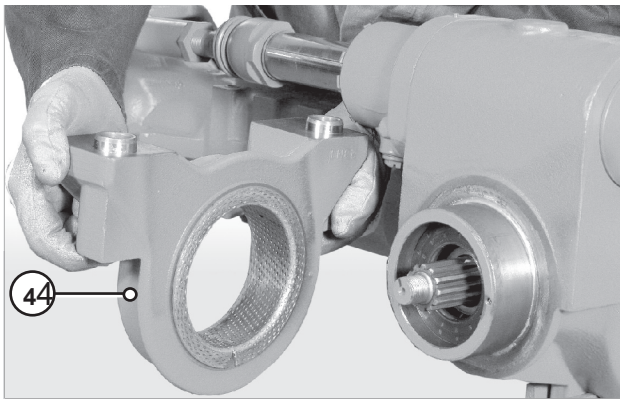

FIGURE 6: Install the swinging support (4).

NOTE:

Check that it is properly oriented.

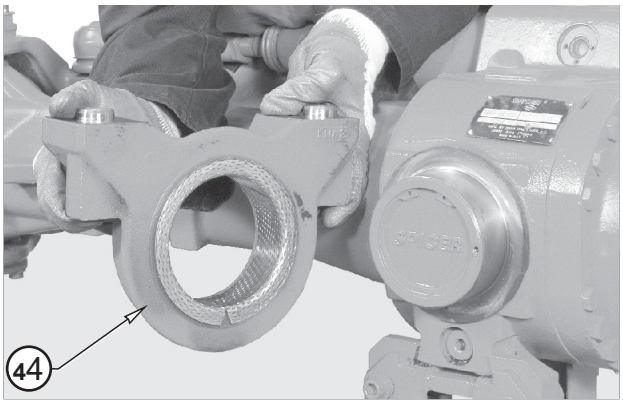

FIGURE 7: Install the swinging support (4) on the side opposite the drive.

SERVICE BRAKE

EXPLODED VIEW

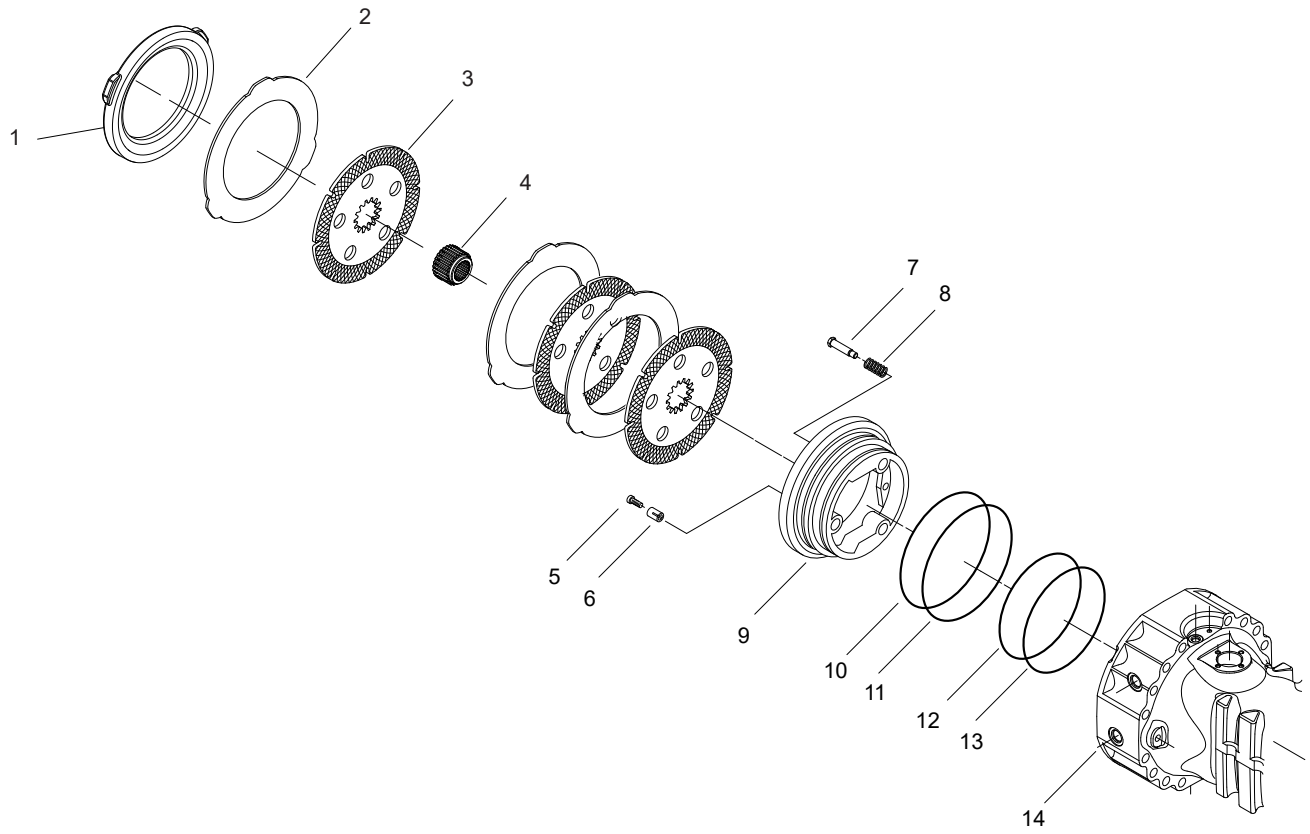

DISASSEMBLY

⚠ DANGER

Before maintaining brakes, when the axle is installed on the vehicle, follow all safety instructions in the Original Equipment Manufacturer (OEM) manual that came with the vehicle.

⚠ CAUTION

Before draining oil, release the internal pressure, for details see OIL DRAINING MANDATORY PROCEDURE p. 14.

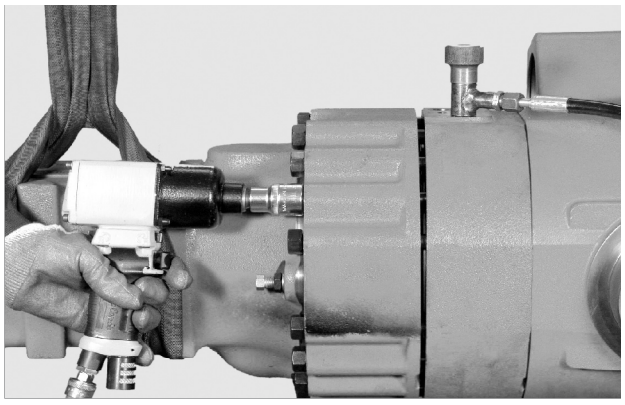

FIGURE 1: Sling the arm to be removed and connect it to a hoist. Loosen and remove screws.

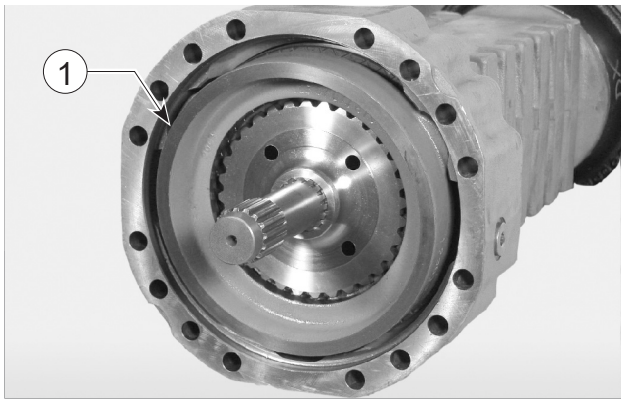

FIGURE 2: Write down the order of assembly and remove the counterwasher (1).

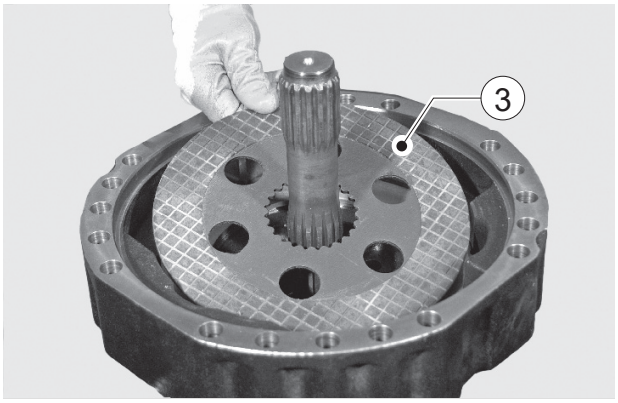

FIGURE 3: Remove braking discs (2, 3), noting down direction of assembly.

NOTE:

If disks are not to be replaced, avoid changing their position.

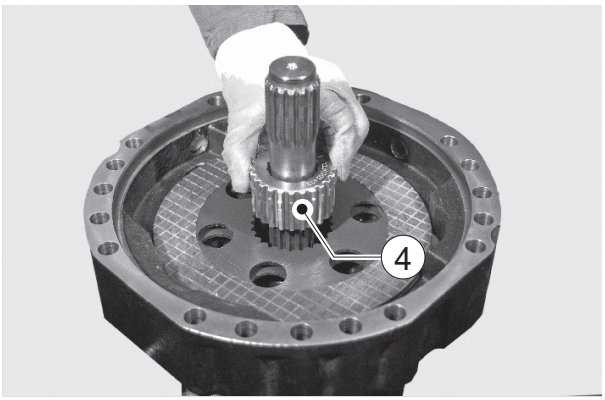

FIGURE 4: Remove the flange (4) complete with the discs.

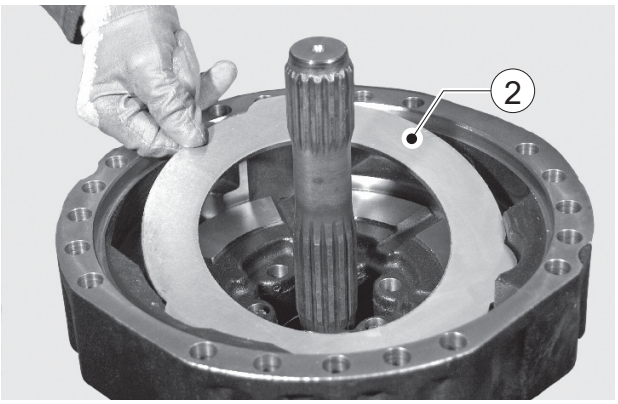

FIGURE 5: Remove braking discs (2, 3), noting down direction of assembly.

NOTE:

If disks are not being replaced, avoid changing their position.

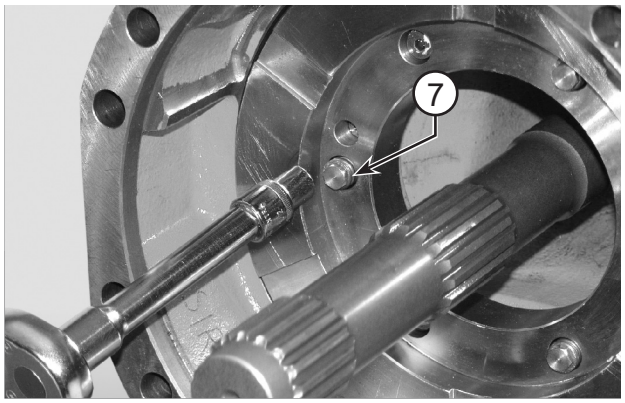

FIGURE 6: Remove the reversal springs (7)

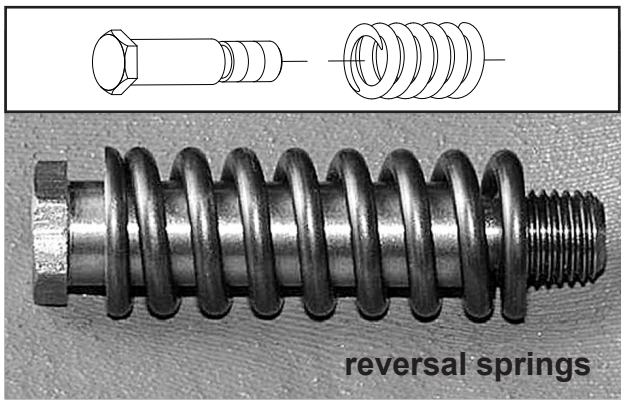

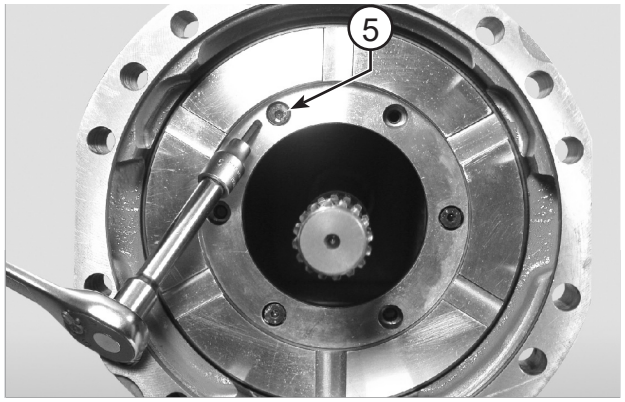

FIGURE 7: Remove the adjusting screws (5)

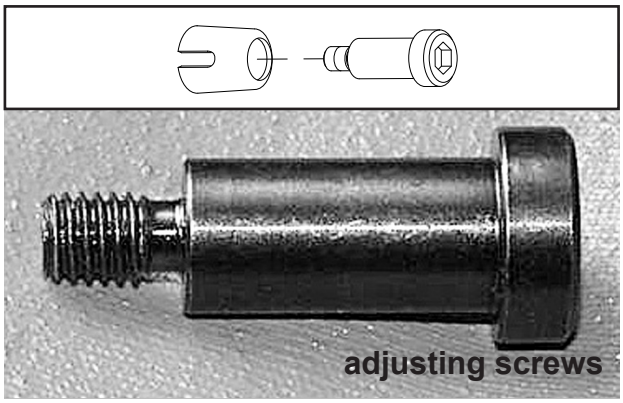

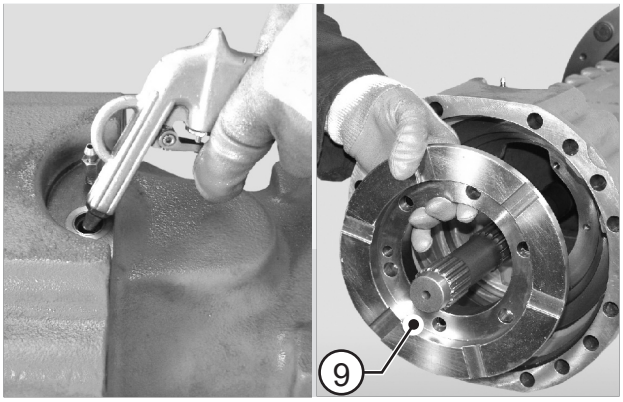

FIGURE 8: Slowly introduce low-pressure compressed air through the connection member for the service brake (P1), in order to extract the piston (9).

⚠CAUTION

Hold the piston (9) back, as it may be suddenly ejected and damaged.

ASSEMBLY

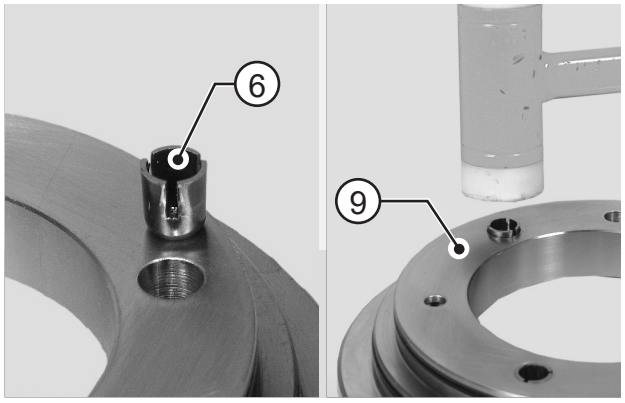

FIGURE 9: Insert the stroke automatic regulation springs (6); place them in line with the piston (9).

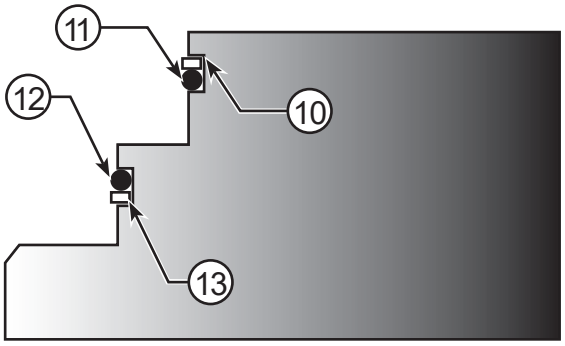

FIGURE 10: Fit o-ring (11, 12) and back-up ring (10, 13) onto the piston (11).
Lubricate the piston and the o-rings and install the unit into the arm (14).

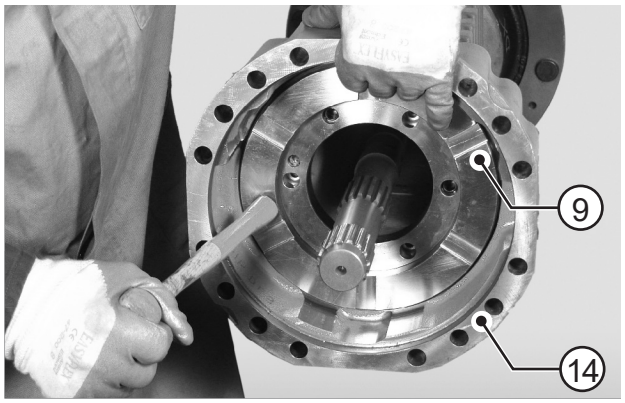

FIGURE 11: Using a plastic hammer, install the piston (9) into the arm (14).

NOTE:

Lightly hammer all around the edge in an alternate sequence.

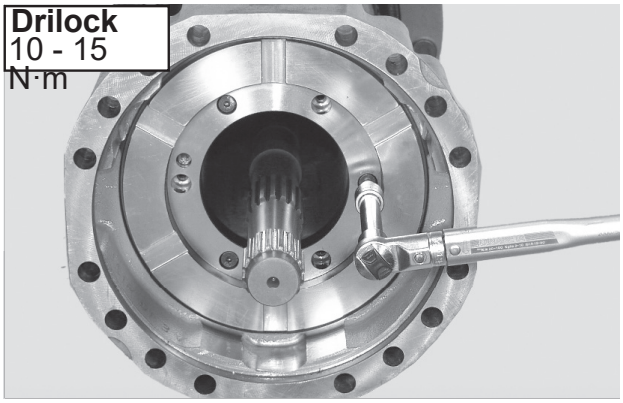

FIGURE 12: Fit the reversal springs screws (7) on the piston (9). Tighten with torque wrench setting of 10 - 15 N·m

⚠CAUTION

Use only new screws pre-treated with Driloc locking adhesive. Threads must be cleaned from oil.

Degrease only non pre-treated threads.

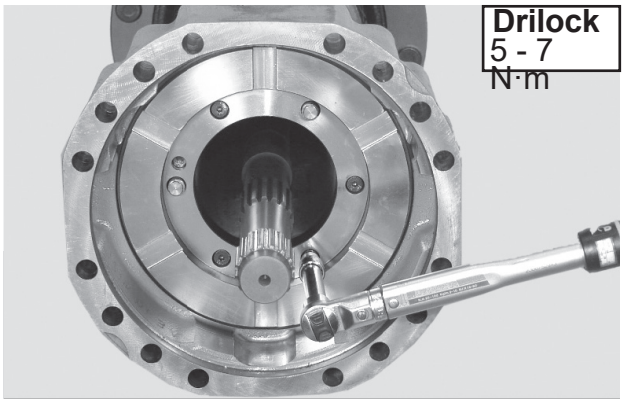

FIGURE 13: Fit the adjusting screws (5).
Torque wrench setting: 5 - 7 N·m.

⚠CAUTION

Use only new screws pre-treated with Driloc locking adhesive. Threads must be cleaned from oil.

Degrease only non pre-treated threads.

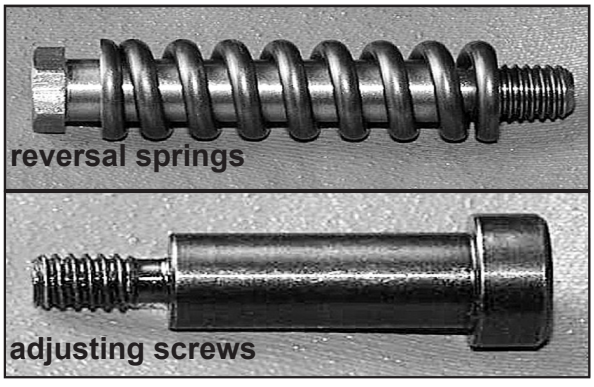

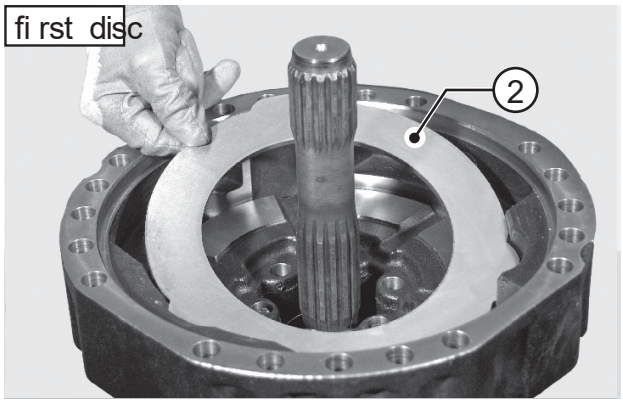

FIGURE 14: Insert the brake discs in the correct sequence.

NOTE:

The first brake disc (2) to be inserted must be of metal material.

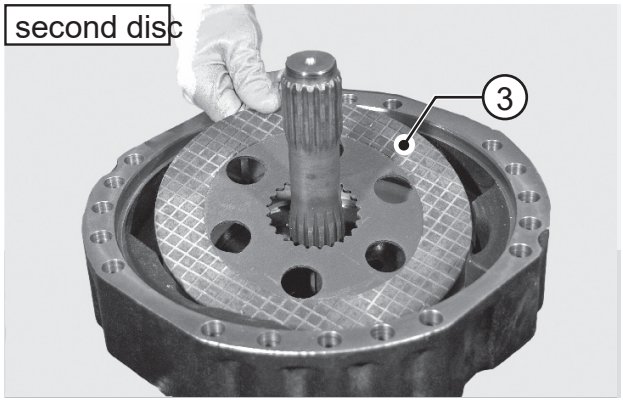

FIGURE 15: The second brake disc (3) to be inserted must be of friction material.

NOTE:

The last brake disc to be inserted must be of friction material.

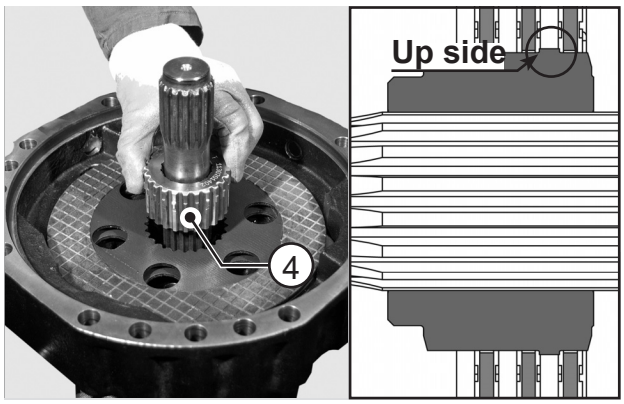

FIGURE 16: Install the flange (4) on the arm.

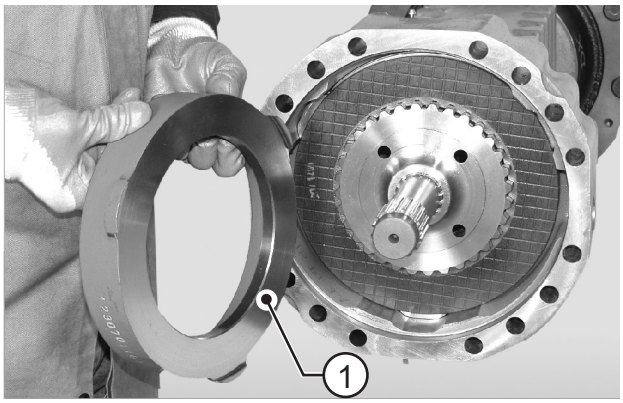

FIGURE 17: Insert the intermediate disk (1).

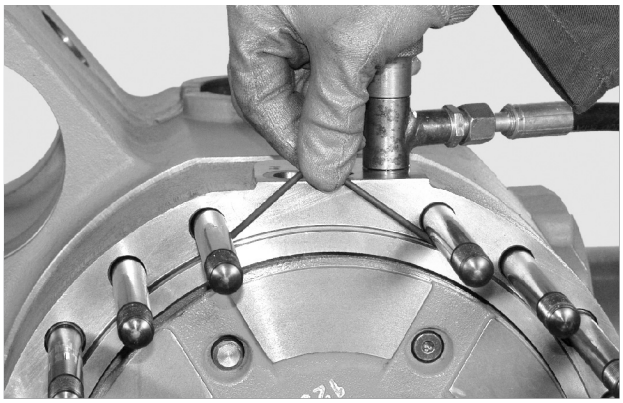

FIGURE 18: Check condition and position of the cylinder's oring.

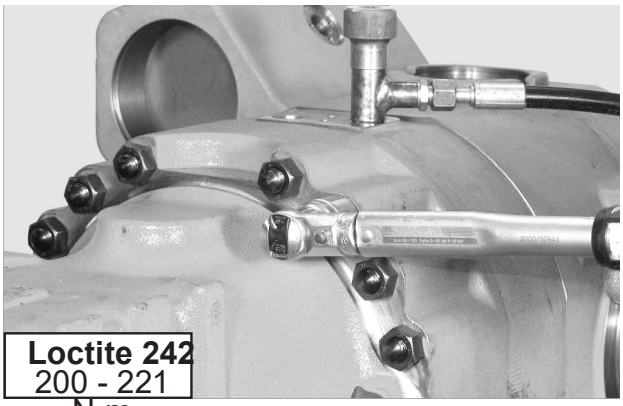

FIGURE 19: Cross tighten the nuts in two stages.
Torque wrench setting: 200 - 221 N·m

PINION FOR 357 FLANGED GEARBOX

EXPLODED VIEW

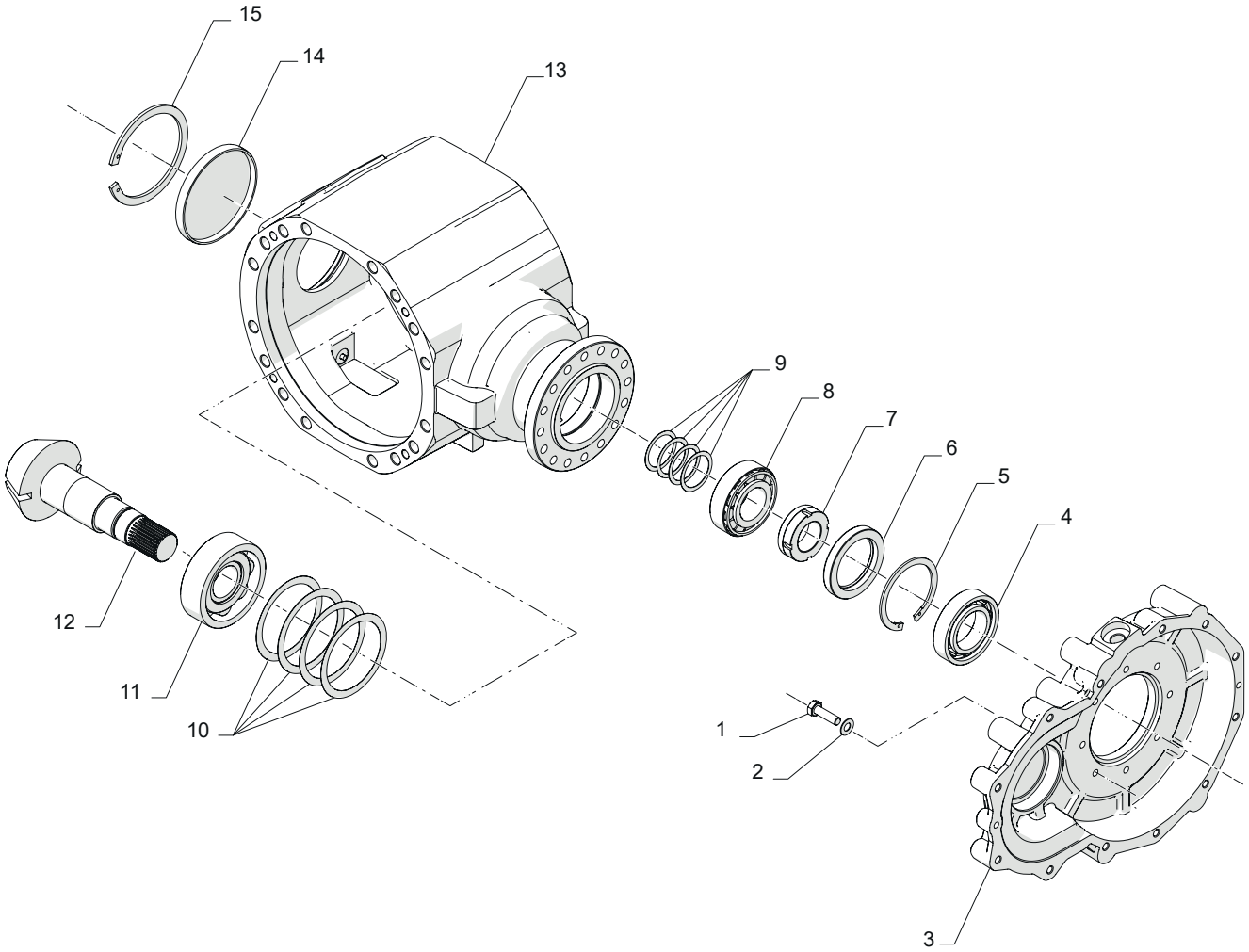

DISASSEMBLY

⚠CAUTION

Before draining oil, release the internal pressure, for details see OIL DRAINING MANDATORY PROCEDURE p. 14.

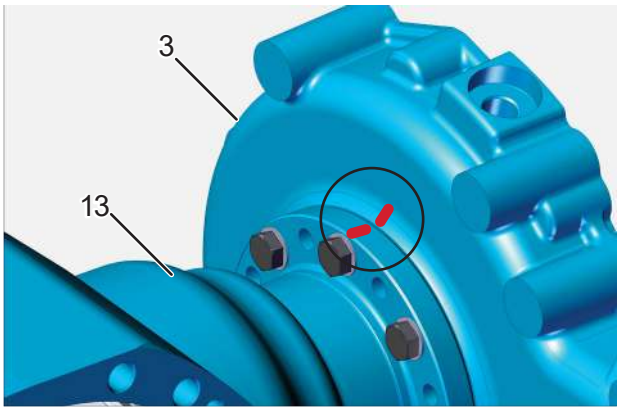

FIGURE 1: Mark the position of the gear box (3) relative to the central housing (13) before removing it.

⚠CAUTION

Safety sling the gearbox and connect it to a suitable lifting device.

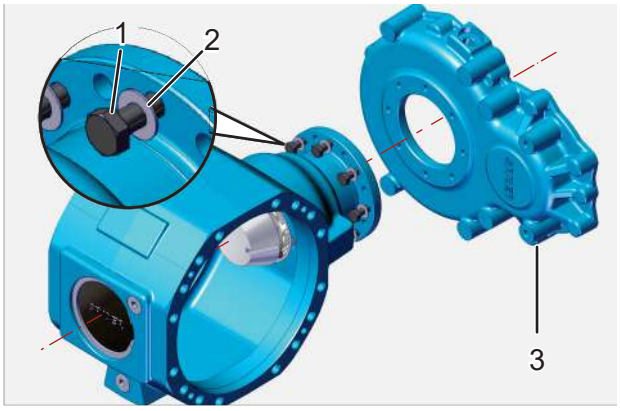

FIGURE 2: Loosen and remove the screws (1) and washers (2).

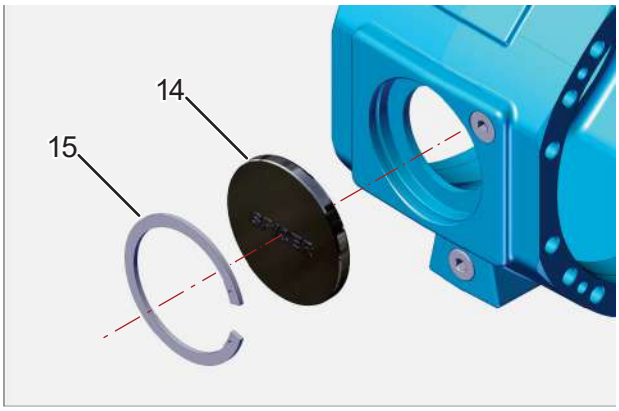

FIGURE 3: Remove the snap ring (15) and the cap (14).

⚠CAUTION

MANDATORY PROCEDURE

Set the pliers following the correct procedure shown in END-STOP PLIER SETTING p. 15.

⚠WARNING

Removal of the snap rings can cause personal injuries. You must wear appropriate safety equipment. To avoid injury to eyes, wear eye protection equipment.

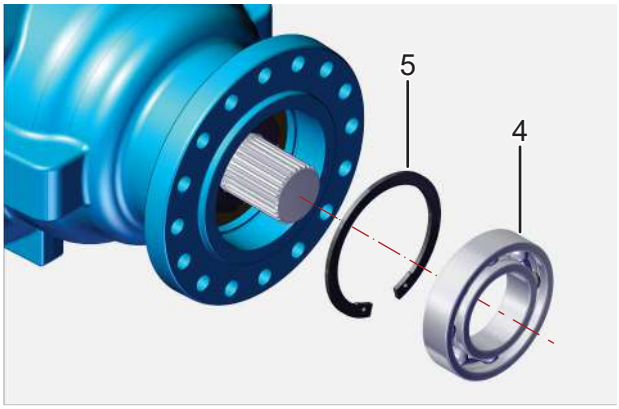

FIGURE 4: Using a suitable extractor remove the ball bearing (4).
Remove the snap ring (5).

⚠CAUTION

MANDATORY PROCEDURE
Set the pliers following the correct procedure shown in END-STOP PLIER SETTING p. 15.

⚠WARNING

Removal of the snap rings can cause personal injuries. You must wear appropriate safety equipment. To avoid injury to eyes, wear eye protection equipment.

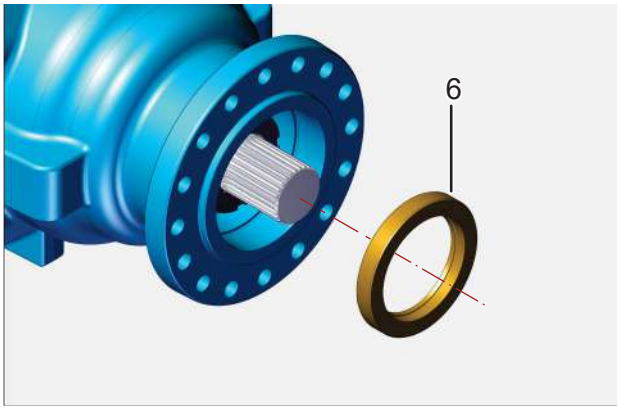

FIGURE 5: Remove the seal ring (16).

⚠CAUTION

Take care not to damage the seal ring seating.

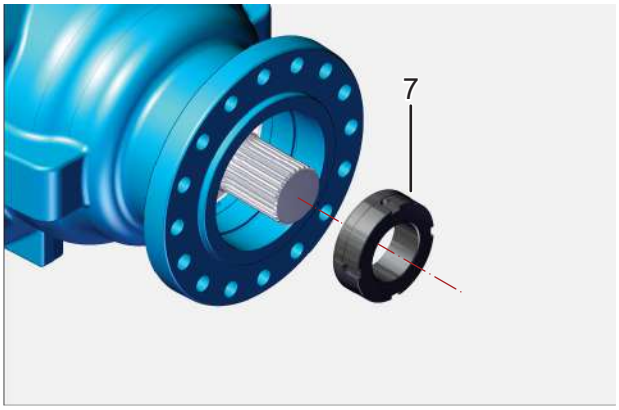

FIGURE 6: Position wrench T1 (See drawing T1 p. 134) on the the ring nut (7) and apply bar hold T2 (See drawing T2 p. 135) to the pinion (12).
Stop wrench T2 (See drawing T2 p. 135) and rotate the pinion (12) to release and remove the ring nut (7).

NOTE:

If disassembly is difficult, heat the ring nut at approximately 176°F (80°C).

⚠WARNING

Wear protective garments when handling hot objects.

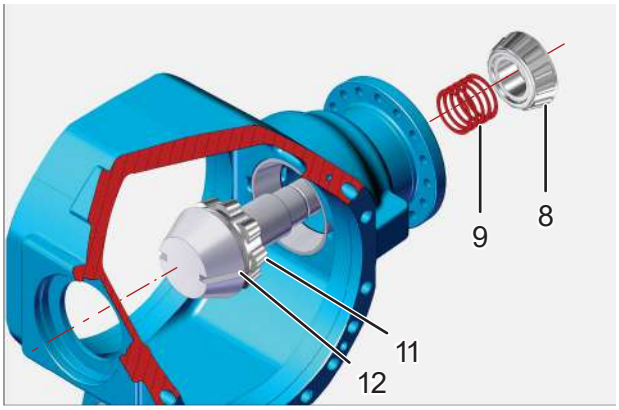

FIGURE 7: Extract the pinion (12) complete with the inner bearing (11) and shims (9). Remove the bearing (8).

NOTE:

The thrust blocks of the bearings remain in the central housing.

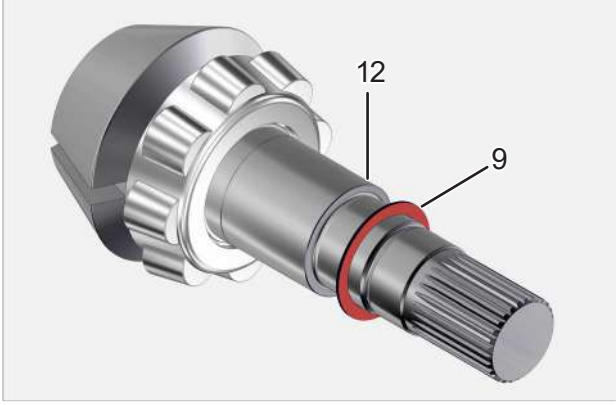

FIGURE 8: Remove shims (9) from the pinion (12).

NOTE:

Check the thickness of first step shims (9).

Example: 0.6 mm.

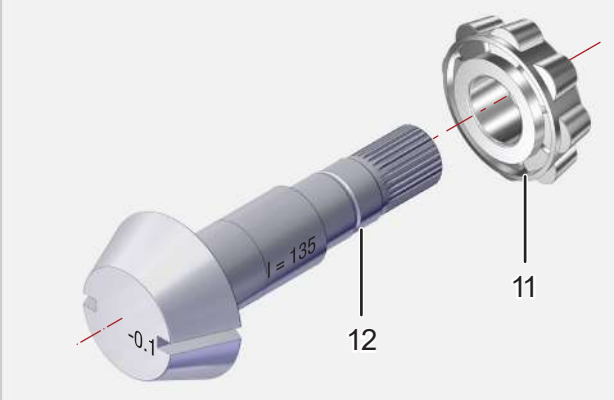

FIGURE 9: Using a puller and a press, remove the inner bearing (11) from the pinion (12).

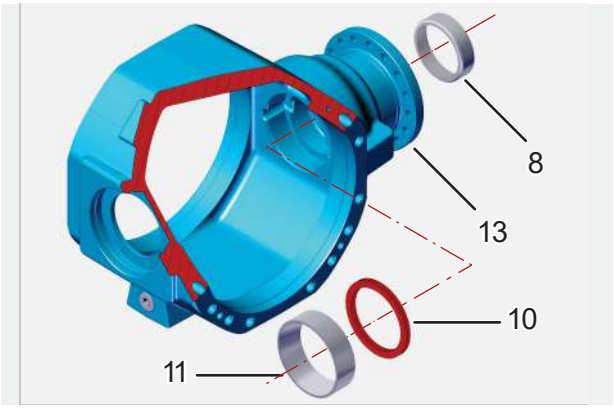

FIGURE 10: Using an internal extractor, remove the bearing thrust block (8, 11) as well as the shim washers (10).

ASSEMBLY

CALCULATING PINION CENTER DISTANCE

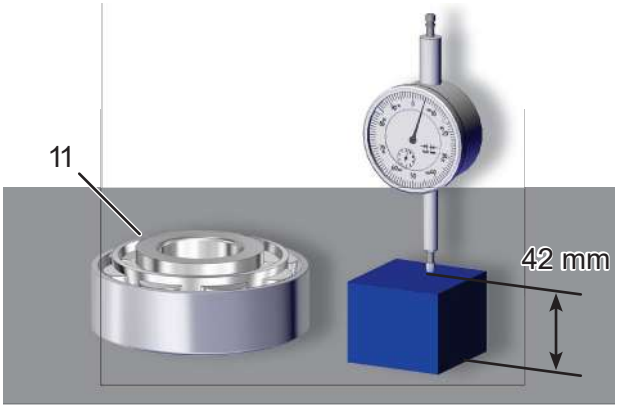

FIGURE 11: Using a faceplate, reset a centesimal comparator on a calibrated block (whose known thickness is 42 mm). Preload the comparator by about 3 mm.

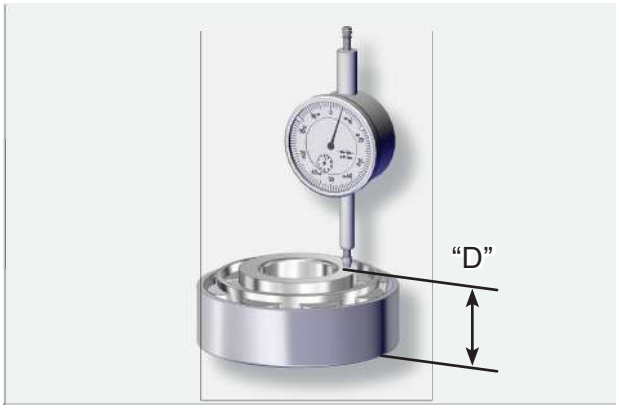

FIGURE 12: Bring inner bearing (11), complete with thrust block, under comparator.
EXAMPLE: 42 + 0,5 = 42,5 = "D".

⚠CAUTION

Press the thrust block centrally and carry out several measurements by rotating the thrust block.

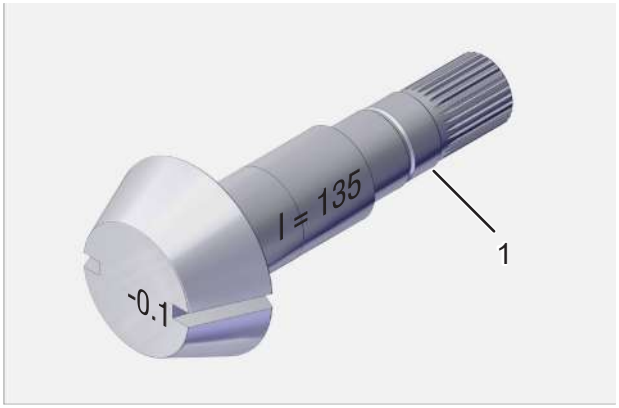

FIGURE 13: Check nominal dimension "I" as marked on the pinion (12). Add up to or subtract from "I" the variation indicated as "Y" to obtain the actual center distance "I". EXAMPLE: I = 135 - 0,1 = 134,9.

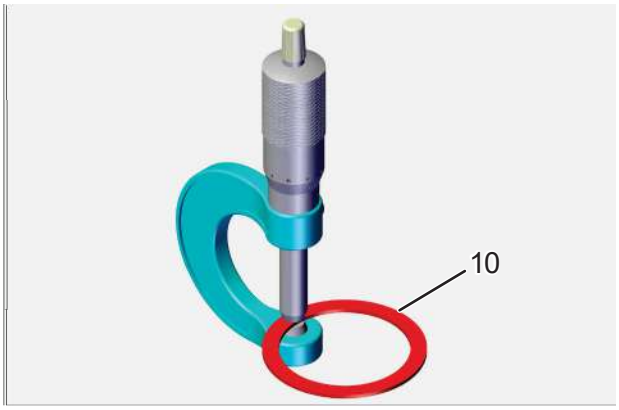

FIGURE 14: Calculate shims "S" (10) for insertion under the thrust block of the inner bearing (11) using the following formula:
S = 178 - (I + D) where: 178 =
fixed dimension;
I = actual pinion center distance;
D = total bearing thickness;
EXAMPLE: S = 178 - (134,9 + 42,5) = 0,6 mm.

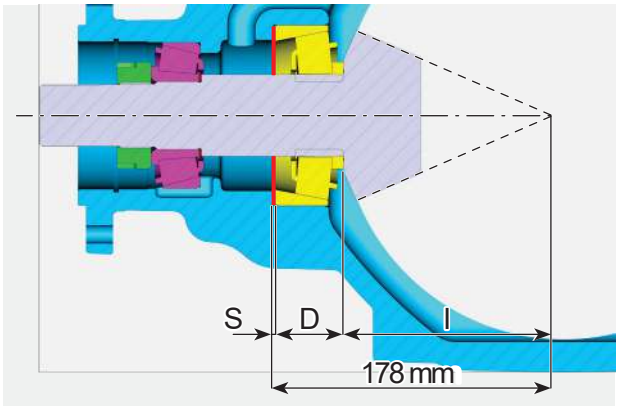

FIGURE 15: Dimension diagram.

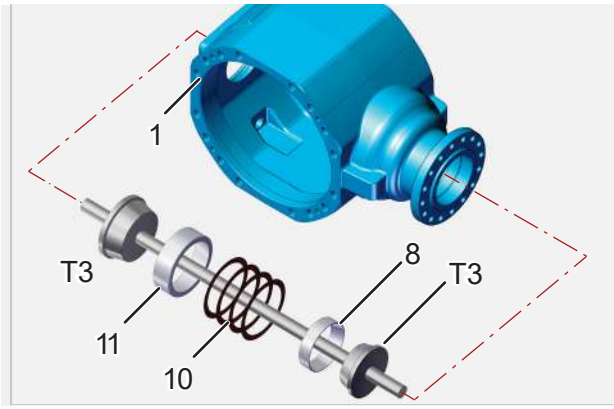

FIGURE 16: Using special tool T3 (See drawing T3 p. 136) partially insert the thrust block of the bearings (8, 11) and shims (10) .

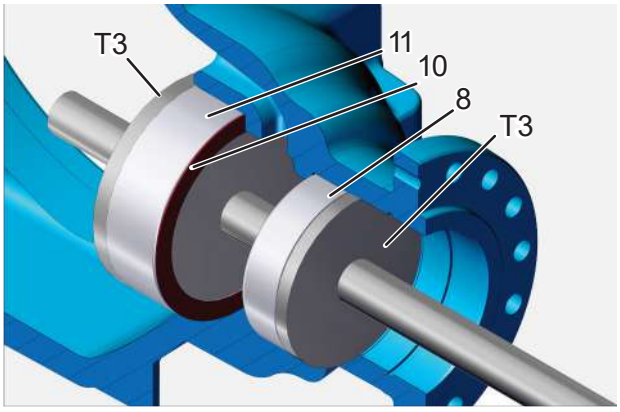

FIGURE 17: Connect the tension rod to the press and move the thrust block of bearings (8, 11) into the seats. Disconnect the press and remove the tension rod.

NOTE:

Before starting the next stage, make sure that the thrust block has been completely inserted into its seat.

CALCULATING PINION BEARINGS ROLLING TORQUE

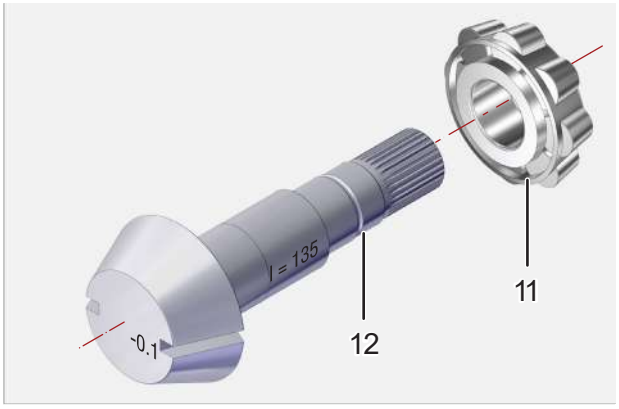

FIGURE 18: Heat the inner bearing (11) to about 176°F (80°C) and assemble it to the pinion (12).

⚠CAUTION

Make sure that the bearing (11) is well set.

⚠WARNING

Wear protective garments when handling hot objects.

NOTE:

Once the bearing has cooled down, lightly lubricate bearing (11) with SAE85W90 oil.

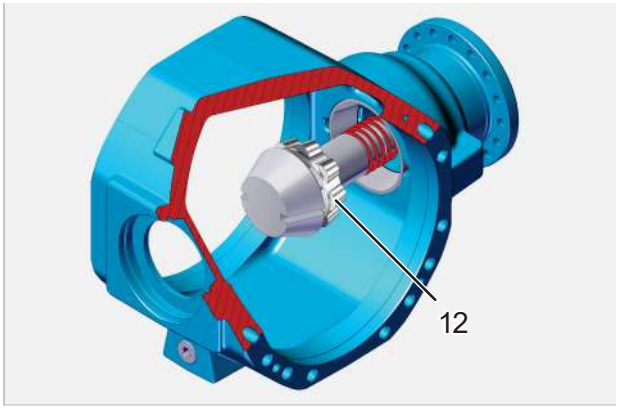

FIGURE 19: Fit the pinion (12), shim "S1" (9) in the main body (13).

NOTE:

Install the first step shims (9).

Example: 0.6 mm.

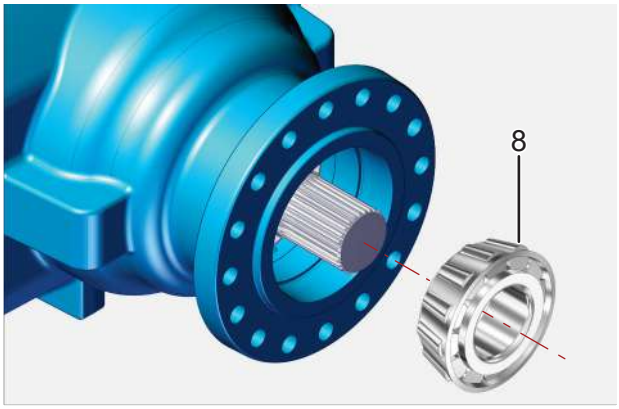

FIGURE 20: Heat the outer bearing (8) to a temperature of about 176°F (80C°) and fit it on to the pinion (12).

⚠WARNING

Wear protective garments when handling hot objects.

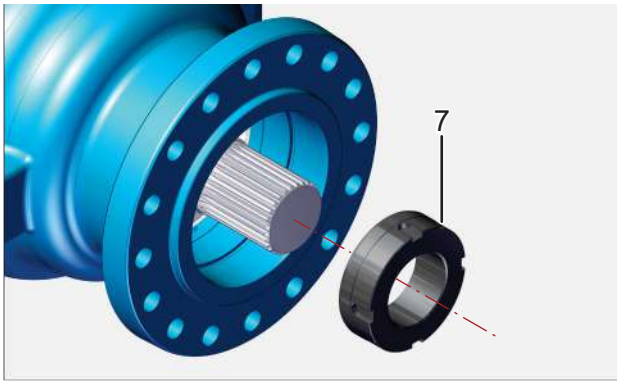

FIGURE 21: Position wrench T1 (See drawing T1 p. 134) on the the ring nut (7) and apply bar hold T2 (See drawing T2 p. 135) to the pinion (12). Lock the special wrench T1 (See drawing T1 p. 134) and rotate the pinion (12) counter-clockwise to tighten the ring nut (7). Using a suitable torque wrench tighten the ring nut (7) to a minimum required tightening torque of 800 - 1000 N·m.

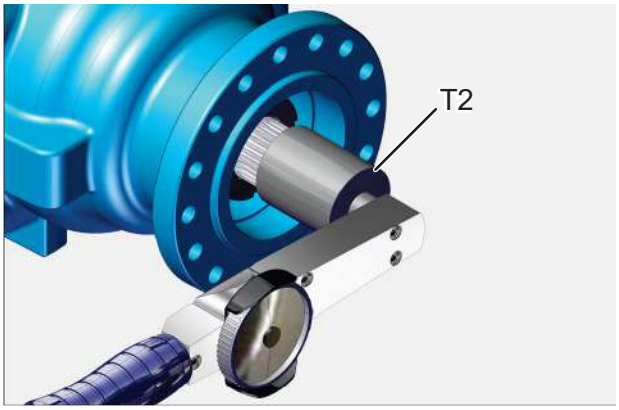

FIGURE 22: Apply on the pinion (12) the bar hold T2 (See drawing T2 p. 135) and using a torque meter, check the torque of the pinion.
Torque: 120 - 180 N·cm

⚠CAUTION

If torque exceeds the maximum value, then the size of shim (9) needs to be increased.

If torque does not reach the minimum value, then the size of shim (9) needs to be reduced.

⚠CAUTION

If bearings are not new, check the static torque; if bearings are new, check the continuous torque.

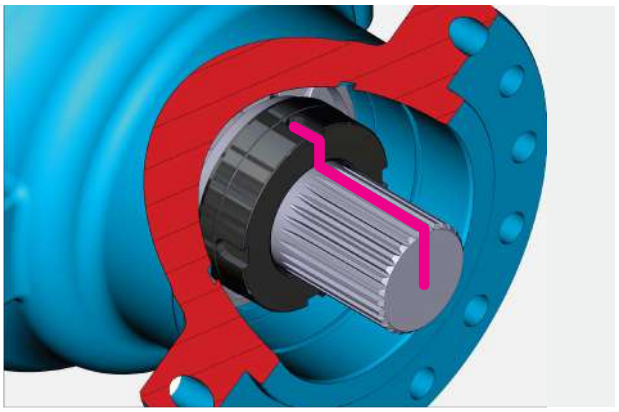

FIGURE 23: Mark the position between ring nut (7) and pinion (12).

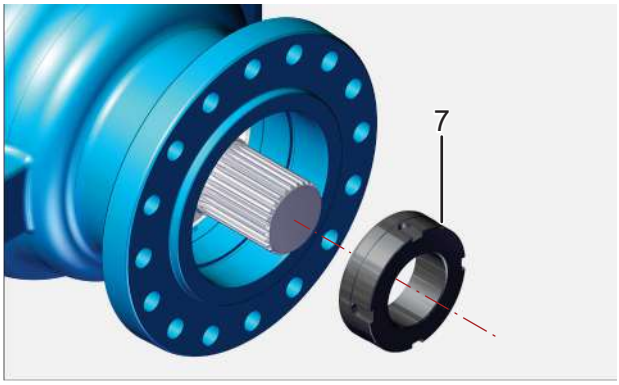

FIGURE 24: Remove the ring nut (7).
Apply Loctite 270 to threaded portion of the ring nut (7). Position wrench T1 (See drawing T1 p. 134) on the the ring nut (7) and apply bar hold T2 (See drawing T2 p. 135) to the pinion (12). Lock the special wrench T1 (See drawing T1 p. 134) and rotate the pinion (12) counterclockwise to tighten the ring nut (7).

IMPORTANT:

PAY ATTENTION TO BRING THE RING NUT IN THE POSITION PREVIOUSLY MARKED.

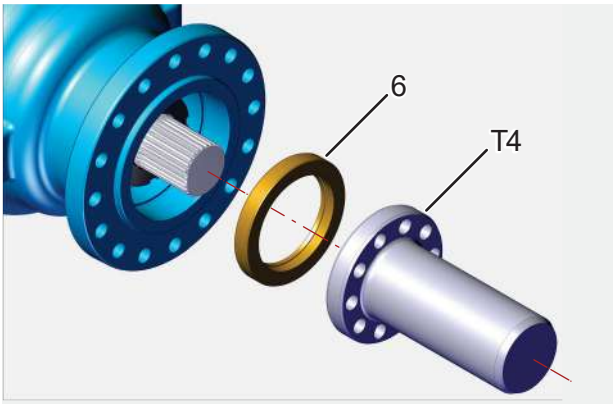

FIGURE 25: Using special tool T4 (see drawing T4 p. 137), install the seal ring (6).

NOTE:

Grease the inner edge of the seal ring (6).

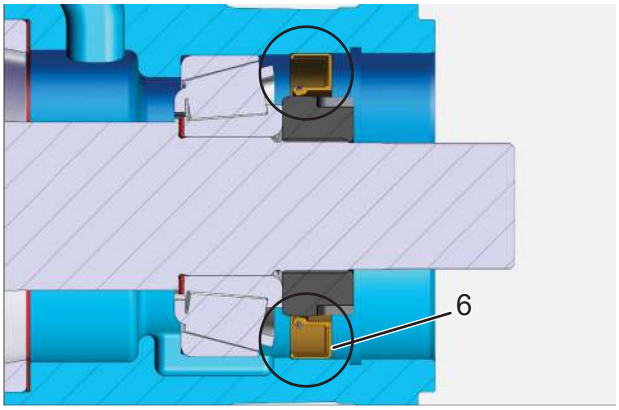

FIGURE 26: Seal ring (6) assembly direction detail.

NOTE:

Pay attention to the installation direction of the seal ring.

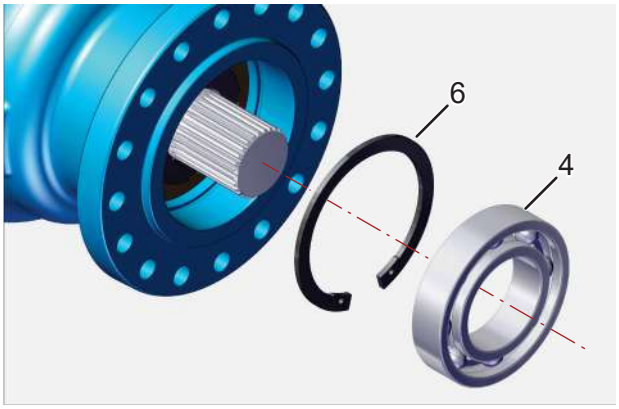

FIGURE 27: Correcty assemble in its seat the snap ring (5). Assemble the ball bearing (4).

⚠CAUTION

MANDATORY PROCEDURE

Set the pliers following the correct procedure shown in END-STOP PLIER SETTING p. 15.

⚠WARNING

Personal injury can result when installing snap ring. The appropriate safety equipment must be worn. To avoid injury to your eyes, wear protective glasses during this procedure.

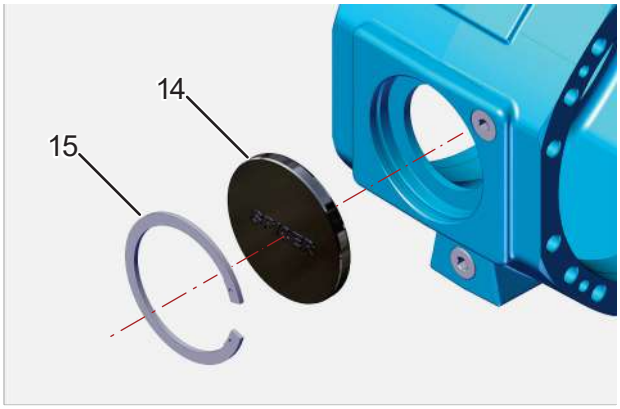

FIGURE 28: Using a suitable driver assemble the cap (14), assemble the snap ring (15).

⚠CAUTION

MANDATORY PROCEDURE

Set the pliers following the correct procedure shown in END-STOP PLIER SETTING p. 15.

⚠WARNING

Personal injury can result when installing snap ring. The appropriate safety equipment must be worn. To avoid injury to your eyes, wear protective glasses during this procedure.

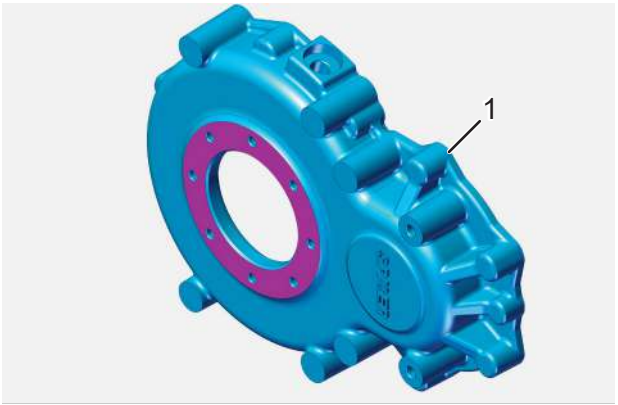

FIGURE 29: Assemble the reduction unit onto the axle by spreading Loctite 510 on the machined surfaces.

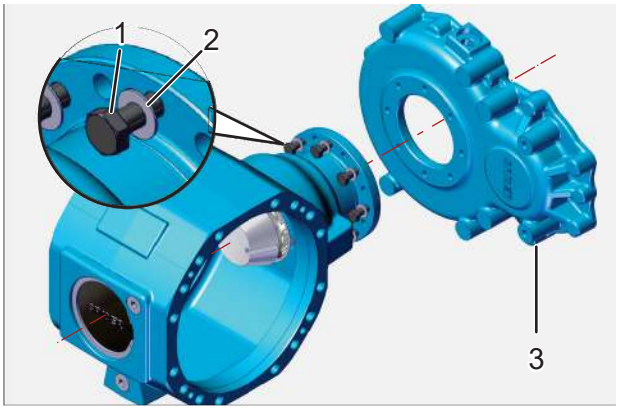

FIGURE 30: Assemble the gearbox (3) on the central housing (3). Assemble the screws (1) and washers (2). Apply Loctite 243 to threaded portion of the capscrews (1). Tighten the capscrews to a torque of 49 - 51 N·m.

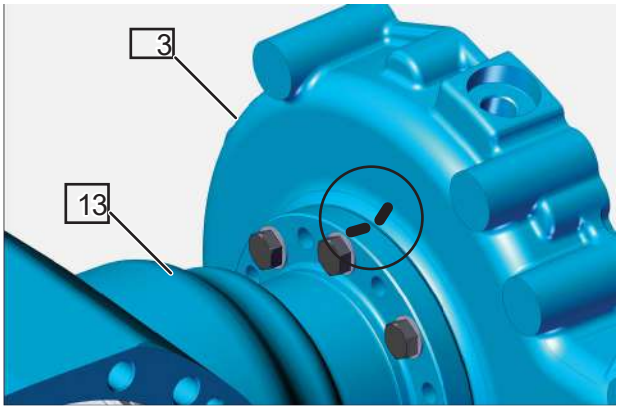

FIGURE 31: Mind the assembly position previously marked.

SPECIAL TOOLS

T1

P/N: 660.38.5017_07

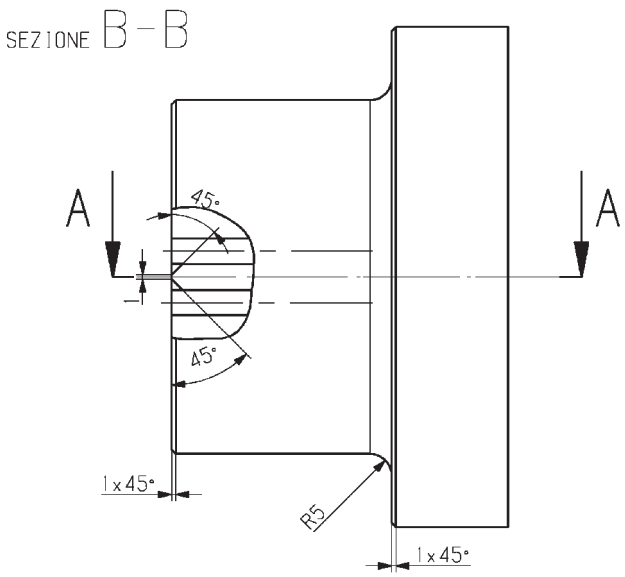

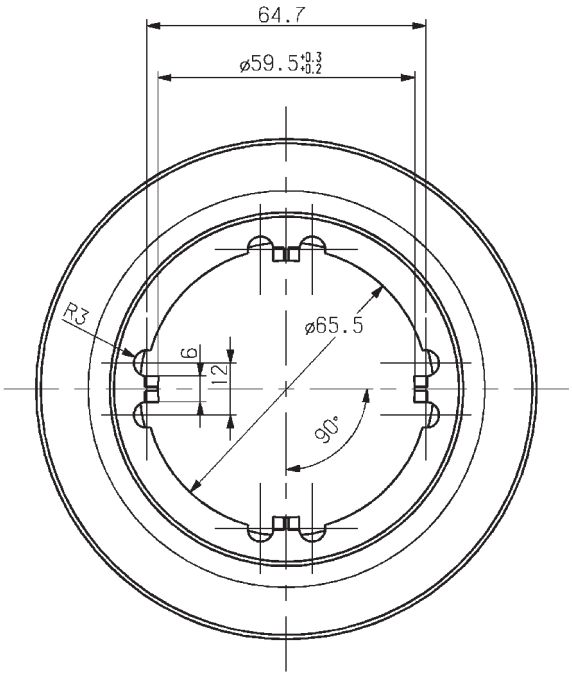

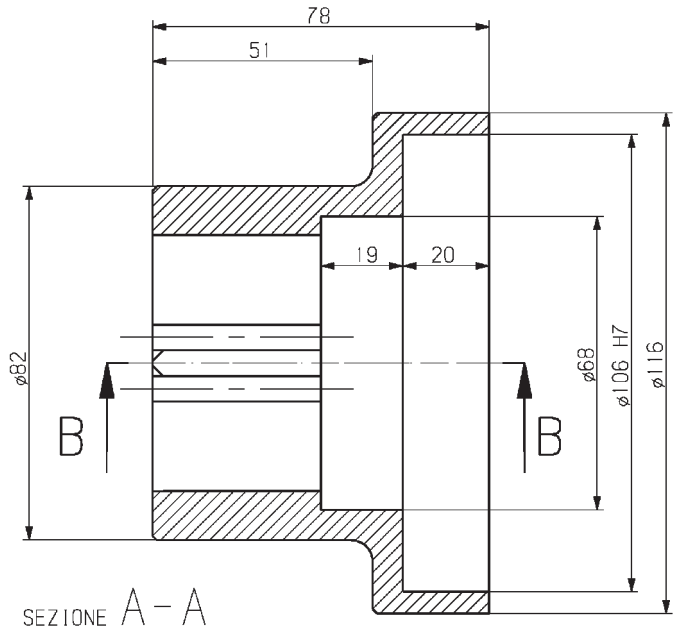

T2

P/N: 660.38.5017_17

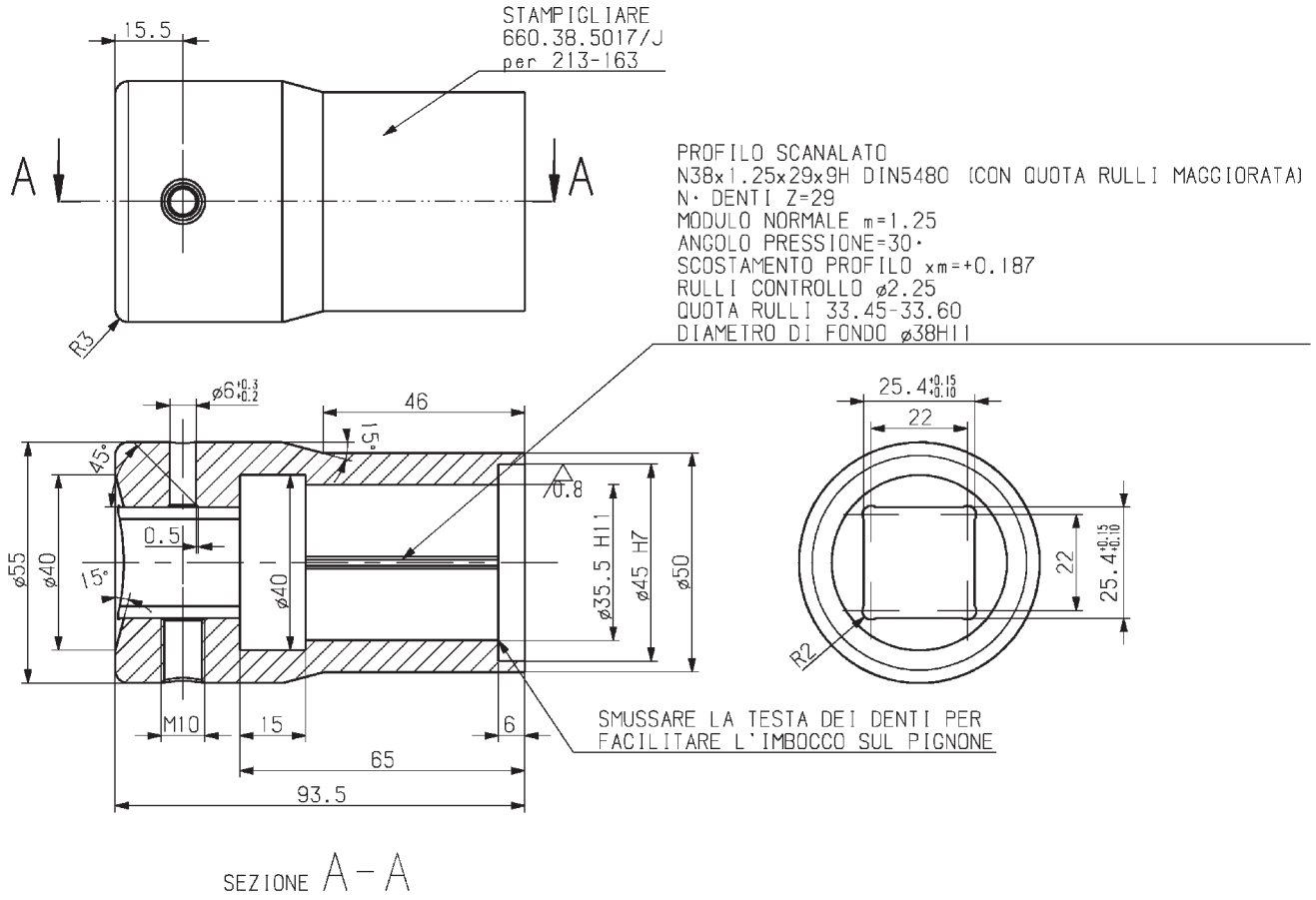

SEZIONE A-A

T3

P/N: 2377

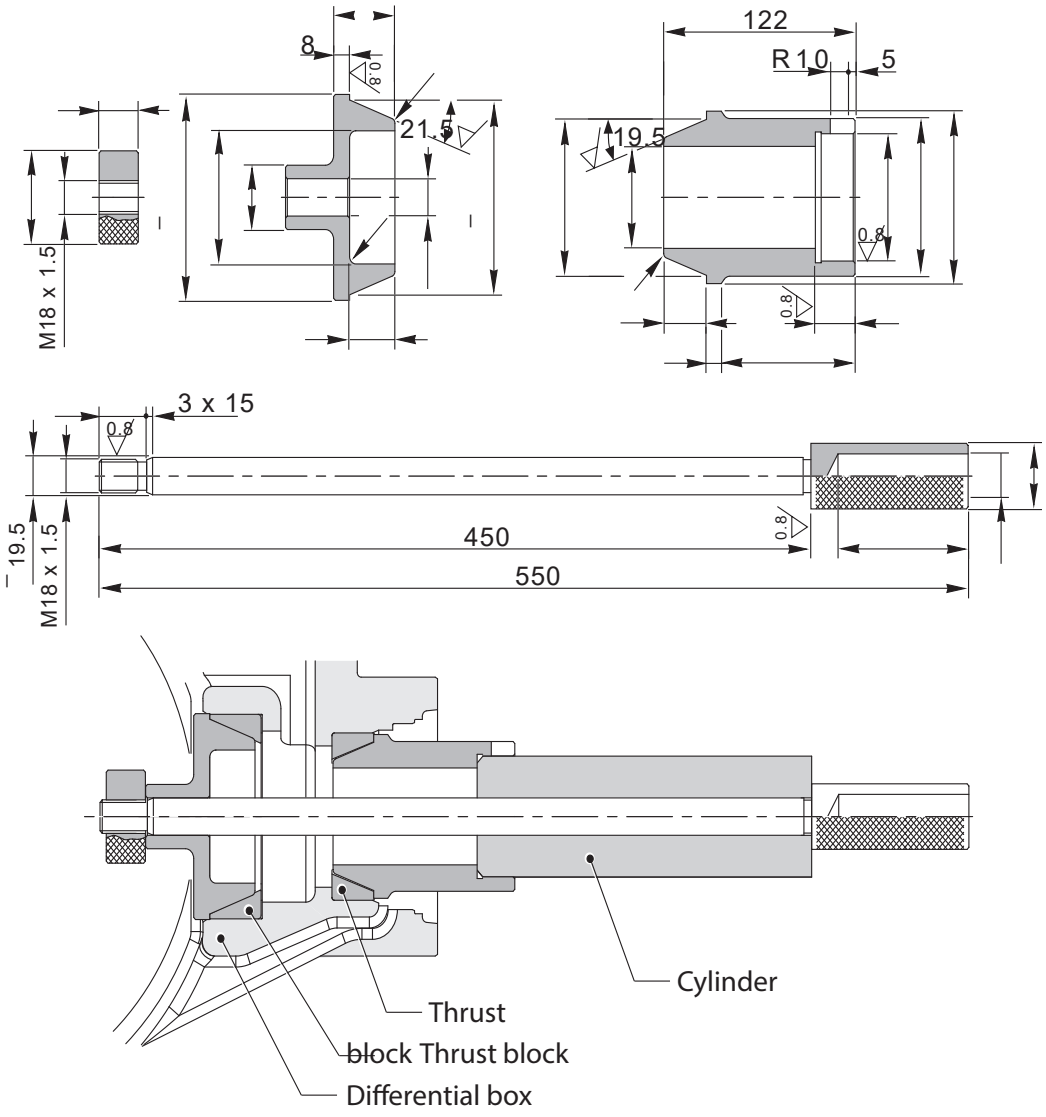
8
0.8
21.5
122
R 1.0
5
19.5
0.8
0.8
M18 x 1.5
3 x 15
0.8
19.5
M18 x 1.5
450
550
0.8
Cylinder
Thrust
block Thrust block
Differential box

Specifications
Definition of Viewpoints

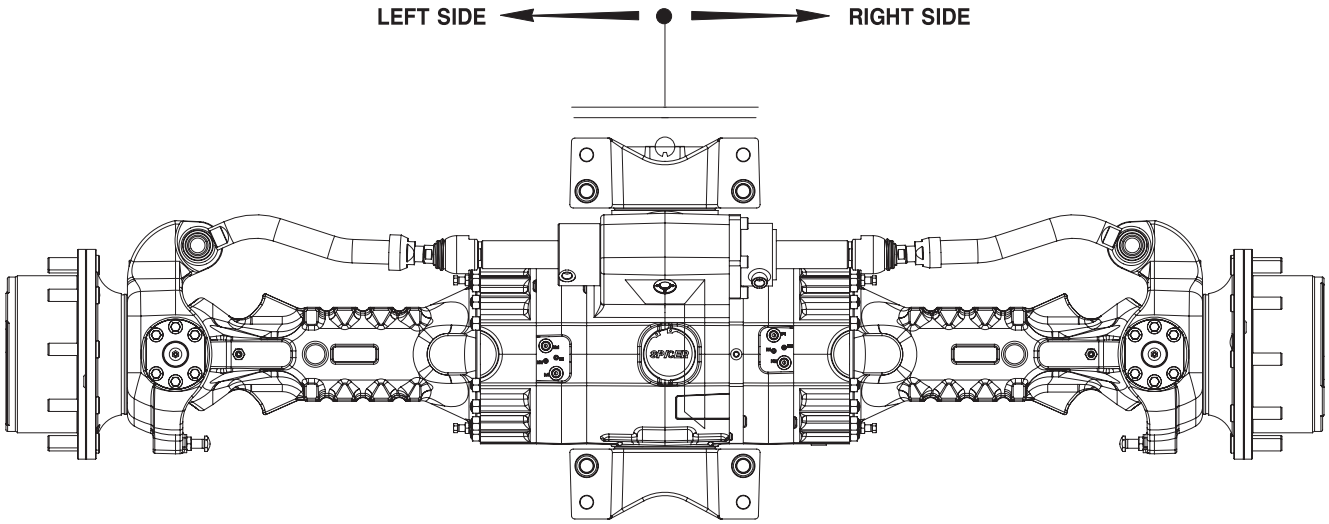

DATA PLATE

1 Model number

2 Reduction ratio

3 Serial number

4 Axle number

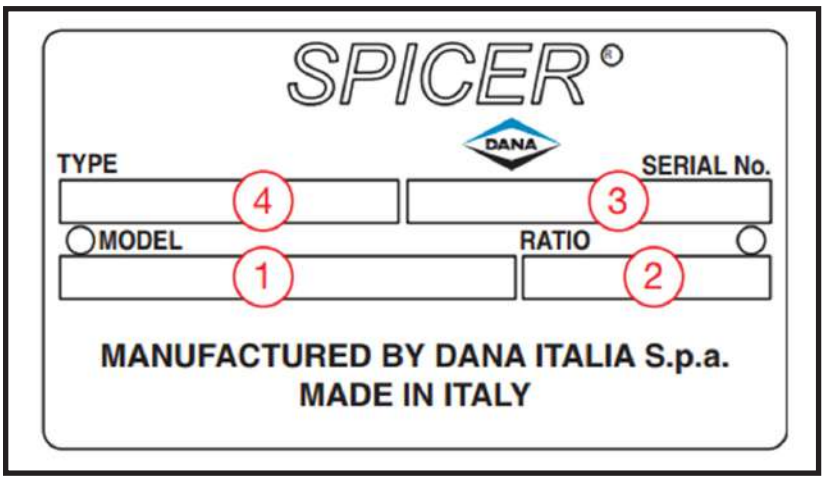

Torque Specifications
Coarse Pitch

Size of bolt	Type of bolt					
	8.8	8.8 + Loctite 270	10.9	10.9 + Loctite 270	12.9	12.9 + Loctite 270
M6 x 1 mm	9,5 - 10,5 N·m	10,5 - 11,5 N·m	14,3 - 15,7 N·m	15,2 - 16,8 N·m	16,2 - 17,8 N·m	18,1 - 20 N·m
M8 x 1,25 mm	23,8 - 26,2 N·m	25,6 - 28,4 N·m	34,2 - 37,8 N·m	36,7 - 40,5 N·m	39 - 43 N·m	43,7 - 48,3 N·m
M10 x 1,5 mm	48 - 53 N·m	52 - 58 N·m	68 - 75 N·m	73 - 81 N·m	80 - 88 N·m	88 - 97 N·m
M12 x 1,75 mm	82 - 91 N·m	90 - 100 N·m	116 - 128 N·m	126 - 139 N·m	139 - 153 N·m	152 - 168 N·m
M14 x 2 mm	129 - 143 N·m	143 - 158 N·m	182 - 202 N·m	200 - 221 N·m	221 - 244 N·m	238 - 263 N·m
M16 x 2 mm	200 - 221 N·m	219 - 242 N·m	283 - 312 N·m	309 - 341 N·m	337 - 373 N·m	371 - 410 N·m
M18 x 2,5 mm	276 - 305 N·m	299 - 331 N·m	390 - 431 N·m	428 - 473 N·m	466 - 515 N·m	509 - 562 N·m
M20 x 2,5 mm	390 - 431 N·m	428 - 473 N·m	553 - 611 N·m	603 - 667 N·m	660 - 730 N·m	722 - 798 N·m
M22 x 2,5 mm	523 - 578 N·m	575 - 635 N·m	746 - 824 N·m	817 - 903 N·m	893 - 987 N·m	974 - 1076 N·m
M24 x 3 mm	675 - 746 N·m	732 - 809 N·m	950 - 1050 N·m	1040 - 1150 N·m	1140 - 1260 N·m	1240 - 1370 N·m
M27 x 3 mm	998 - 1103 N·m	1088 - 1202 N·m	1411 - 1559 N·m	1539 - 1701 N·m	1710 - 1890 N·m	1838 - 2032 N·m
M30 x 3,5 mm	1378 - 1523 N·m	1473 - 1628 N·m	1914 - 2115 N·m	2085 - 2305 N·m	2280 - 2520 N·m	2494 - 2757 N·m

Fine Pitch

Size of bolt	Type of bolt					
	8.8	8.8 + Loctite 270	10.9	10.9 + Loctite 270	12.9	12.9 + Loctite 270
M8 x 1 mm	25,7 - 28,3 N·m	27,5 - 30,5 N·m	36,2 - 39,8 N·m	40 - 44 N·m	42,8 - 47,2 N·m	47,5 - 52,5 N·m
M10 x 1,25 mm	49,4 - 54,6 N·m	55,2 - 61 N·m	71,5 - 78,5 N·m	78 - 86 N·m	86 - 94 N·m	93 - 103 N·m
M12 x 1,25 mm	90 - 100 N·m	98 - 109 N·m	128 - 142 N·m	139 - 154 N·m	152 - 168 N·m	166 - 184 N·m
M12 x 1,5 mm	86 - 95 N·m	94 - 104 N·m	120 - 132 N·m	133 - 147 N·m	143 - 158 N·m	159 - 175 N·m
M14 x 1,5 mm	143 - 158 N·m	157 - 173 N·m	200 - 222 N·m	219 - 242 N·m	238 - 263 N·m	261 - 289 N·m
M16 x 1,5 mm	214 - 236 N·m	233 - 257 N·m	302 - 334 N·m	333 - 368 N·m	361 - 399 N·m	394 - 436 N·m
M18 x 1,5 mm	312 - 345 N·m	342 - 378 N·m	442 - 489 N·m	485 - 536 N·m	527 - 583 N·m	580 - 641 N·m
M20 x 1,5 mm	437 - 483 N·m	475 - 525 N·m	613 - 677 N·m	674 - 745 N·m	736 - 814 N·m	808 - 893 N·m
M22 x 1,5 mm	581 - 642 N·m	637 - 704 N·m	822 - 908 N·m	903 - 998 N·m	998 - 1103 N·m	1078 - 1191 N·m
M24 x 2 mm	741 - 819 N·m	808 - 893 N·m	1045 - 1155 N·m	1140 - 1260 N·m	1235 - 1365 N·m	1363 - 1507 N·m
M27 x 2 mm	1083 - 1197 N·m	1178 - 1302 N·m	1520 - 1680 N·m	1672 - 1848 N·m	1834 - 2027 N·m	2000 - 2210 N·m
M30 x 2 mm	1511 - 1670 N·m	1648 - 1822 N·m	2138 - 2363 N·m	2332 - 2577 N·m	2565 - 2835 N·m	2788 - 3082 N·m

Wheel Nut Tightening Torques

WHEEL NUT TIGHTENING TORQUES				
CHARACTERIS-TICS	ILLUSTRATION	WHEEL STUD THREAD	RECOMMENDED WHEEL NUTS TORQUE	
			RIM MATERIAL QUALITY	
			ST-37	ST-52
WHEEL NUTS WITH INTEGRAT-ED SPHERICAL COLLAR	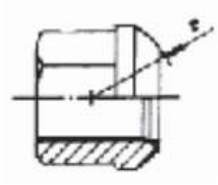	M18X1,5 mm	330 N·m	460 N·m
		M20X1,5 mm	490 N·m	630 N·m
		M22X1,5 mm	630 N·m	740 N·m
FLAT COLLAR WHEEL NUTS WITH SEPARATE SPHERICAL LOCK WASHER	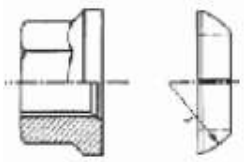	M18X1,5 mm	270 N·m	360 N·m
		M20X1,5 mm	360 N·m	450 N·m
		M22X1,5 mm	460 N·m	550 N·m
WHEEL NUTS WITH INTEGRATE SEAT CAPTIVE WASHER	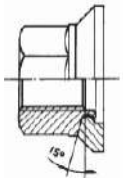	M18X1,5 mm	260 N·m	360 N·m
		M20X1,5 mm	350 N·m	500 N·m
		M22X1,5 mm	450 N·m	650 N·m

MAINTENANCE

MAINTENANCE POINTS

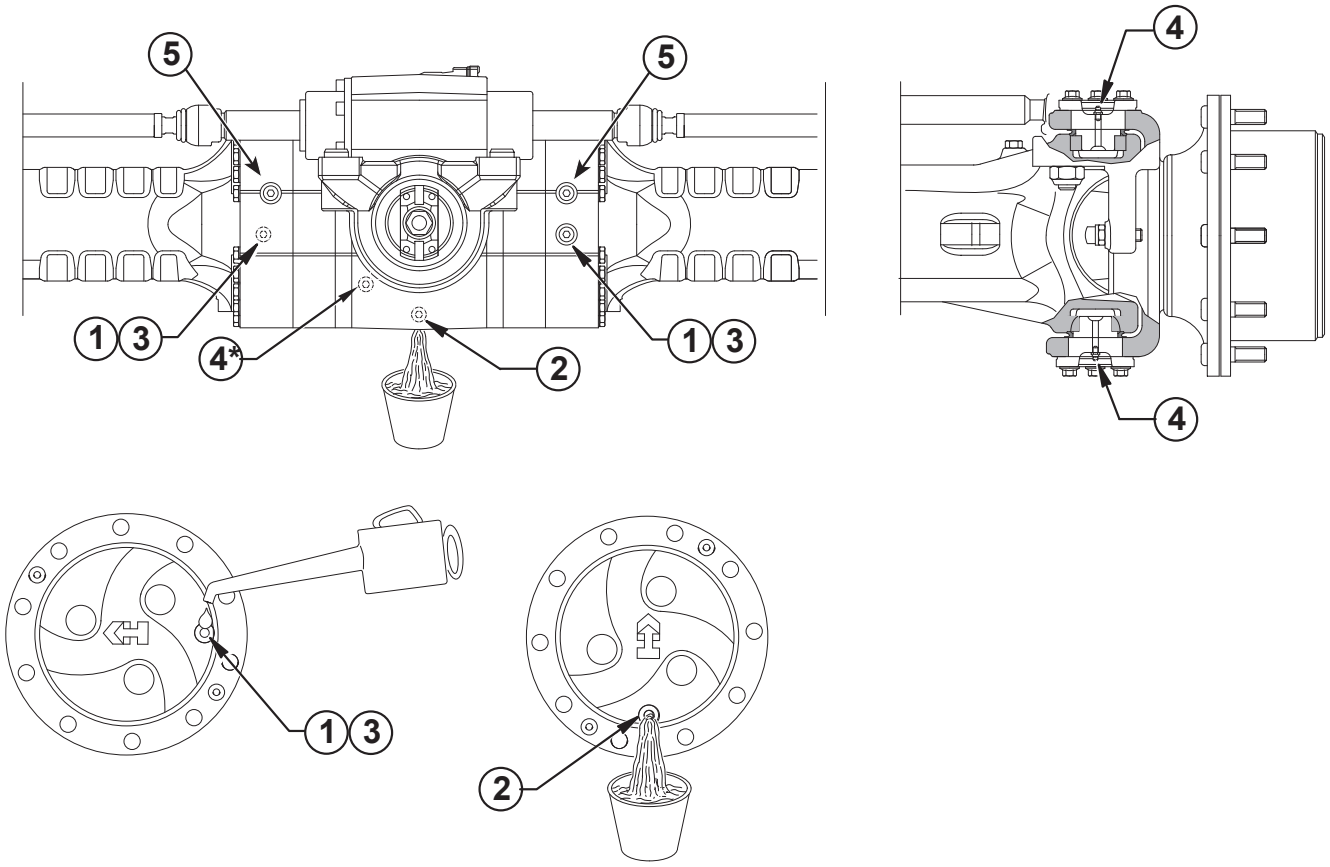

1 - Oil filling plug **2 -**

Oil draining plug

3 - Check level plug

4 - Grease zerk

5 - Check brake disc wearMinimum thickness between counter discs is 5.2 mm.

NOTE:

For details see BRAKE WEAR CHECK PROCEDURE p. 21

* Not present in all models

Oil Draining Mandatory Procedure

WARNING!

• Do not attempt any maintenance if the axle is hot (104-122°F / 40-50°C). Hot oil and components can cause personal injury. Avoid skin contact. Wear protective gloves and glasses.

• Make sure all fluids are contained during inspection, maintenance, tests, adjustment and repair of the product. Prepare a suitable container to collect the fluid before removing any component containing fluids. Dispose of all fluids following legal and local regulations.

CENTRAL HOUSING

Before draining oil it is mandatory to loosen the oil filling plug or the breather (if present), and wait until the internal pressure is completely released. Remove the oil draining plug and drain oil only when the pressure is completely released.

PLANETARY GEAR REDUCTION

Before draining oil it is mandatory to rotate the planetary gear reduction in order to move the oil plug in filling position, then loosen the oil plug and wait until the internal pressure is completely released. Remove the oil plug and drain oil only when the pressure is completely released.

END-STOP PLIER SETTING

RETAINING SNAP RING FOR BORES

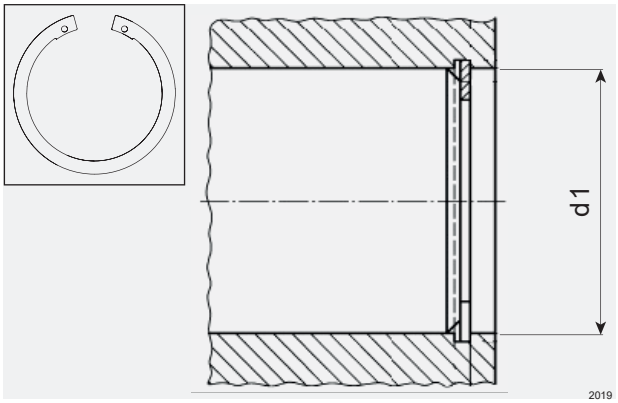

1 - Measure the bore diameter of circlip (or snapring) "d1";
2 - Pre-set the caliber at value "Dmin" ("Dmin"= "d1" x 0,99);
3 - Fix it with the screw on caliber (see picture - Point A);
4 - Put the snap ring into the plier;
5 - Close it until the end-stop bolt allows;
6 - Adjust the end-bolt in order to match the external diameter of the snap ring with "Dmin" value;
7 - Scrap the snap ring used for the end-stop plier calibration.

AEnd-bolt

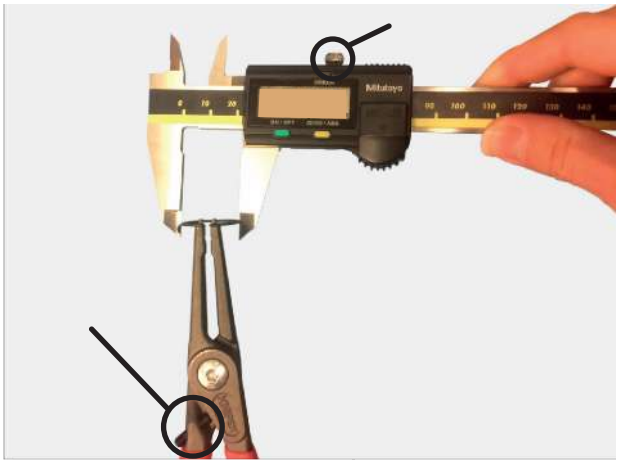

⚠CAUTION

This procedure is aligned with DIN standard. In any case, DIN 472 regulation prevails.

⚠CAUTION

Snap ring replacement is mandatory if they are removed without pre-setted plier.

RETAINING SNAP RING FOR SHAFTS

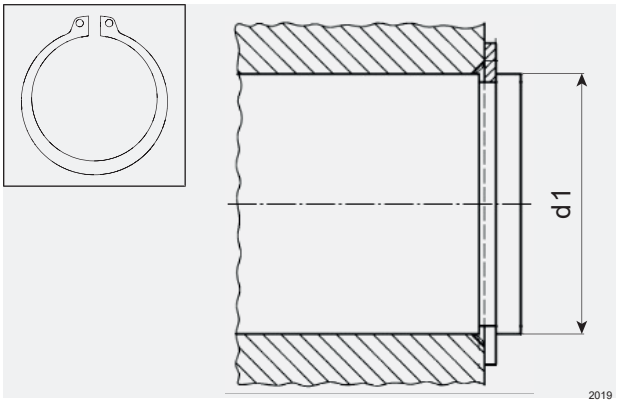

1 - Measure the shaft diameter of circlip (or snapring) "d1";
2 - Pre-set the caliber at value "Dmax" ("Dmax"= "d1" x 1,01);
3 - Fix it with the screw on caliber (see picture - Point A);
4 - Put the snap ring into the plier;
5 - Open it until the end-stop bolt allows:
6 - Adjust the end-bolt in order to match the internal diameter of the snap ring with "Dmax" value;
7 - Scrap the snap ring used for the end-stop plier calibration.

⚠CAUTION

This procedure is aligned with DIN standard. In any case, DIN 471 regulation prevails.

⚠CAUTION

Snap ring replacement is mandatory if they are removed without pre-setted plier.

Maintenance Intervals

OPERATION	COMPARTMENT	1st CHANGE / CHECK (whs)	FREQUENCY (whs)	LUBRICANTS	REMARKS
Oil level check **All**		10 whs	Monthly	For details see below	Carefully clean oil magnetic plugs and speed sensors**.
Oil Change	Differential	100-250 whs max. *	1000 whs	Central body with standard bevel gear - UTTO (API GL4) J20/C; or gear: SAE 80W/90 (API GL4 or GL5) (1)	(1) If with limited slip differential, and/or wet brakes, use LS additivated oils. Carefully clean oil magnetic plugs and speed sensors **.
				Central body with hypoid bevel gear - SAE 80W/90 (API GL5) (1)	
	Hub Reduction	100-250 whs max.		UTTO (API GL4) J20/C; or gear: SAE 80W/90 (API GL4 or GL5)	Carefully clean oil magnetic plugs and speed sensors **
	Dropbox / Transmission**	100-250 whs max. *		Gears and wet discs clutch - ATF oil e.g. GM Dexron IIE, Dexron III	Carefully clean oil magnetic plugs and speed sensors **. * in accordance with Machine Service requirements.
				Only gears- UTTO J20/C, or gear: SAE 80W/90 (API GL4 or GL5)	
Adjustment	Negative brake (SAHR)	100 whs	Every 500 whs	For hydraulic actuations (brakes, SAHR, 100% diff. lock, etc.) use ATF oil e.g. GM Dexron IIE, Dexron III	Not applicable
	Service brake				DOT brake fl uids oils are NOT compati- ble w/ std oils
Tightening	Wheel nuts	10 whs	Every 200 whs	No lubricant allowed	Check for any damage or corrosion of treads or mating surfaces.
Greasing	King Pin Tapered Roller Bearings	10 whs	Normal work – Weekly or Severe duty – Daily	NLGI2 EP or NLGI3 EP	Supply grease until clean grease is vis- ible from outside. Grease performance level acc. to: According to DIN 51825 level KP2K-30 (NLGI2) or KP3K-20 (NLGI3); ASTM D4950 NLGI2 GC-LB
	Seals	10 whs			
	King Pin Bushings	10 whs		NLGI2 EP or NLGI3 EP with Moly Addittive	
	Trunnion Bushings	10 whs			

In case of severe duty, half oil change intervals must be applied.

In case of extreme enviroments, chatter noise, reduce oil change intervals accordingly.

In case of extremely low ambient temperatures (<-4°F (-20°C)), use appropriate oils w/ low viscosity: UTTO J20/D (std Bevel Gears), SAE 75W/90 API GL5 LS (Hypoid Bevel Gears: i.e. axle models 192, 193, 194).

API GL5: Acc. To MIL L-2105-B document rev.02_18122018

See PSB 00279 (latest update) for more info regarding lubricants and viscosity grades.

**Where present.

LUBRICANT & SEALANT SPECIFICATIONS

1- Locking, sealing and lubricating materials referred to in this manual are the same used in the shop-floor.
2 - The table below gives an account of the typical applications of each single material, in order to facilitate replacement with similar products marketed by different brand names with different trade marks.

LOCTITE 242
Anaerobic product apt to prevent the loosening of screws, nuts and plugs. Used for medium-strength locking. Before using it, completely remove any lubricant by using the specific activator.

LOCTITE 243
The oleocompatible alternative to 242. Does not require the activation of lubricated surfaces.

LOCTITE 270
Anaerobic product for very-high strength locking of screws and nuts. Before using it, completely remove any lubricant by using the specific activator.
To remove parts, it may be necessary to heat them at 80 °C approximately.

LOCTITE 275
Anaerobic product suitable for high-strength locking and sealing of large threaded parts, bolts and stud bolts, for pipe sealing and for protecting parts against tampering; suitable for sealing coupling surfaces with a maximum diametrical clearance of 0.25 mm.

LOCTITE 510
Anaerobic product for the hermetic sealing of flanged units and screw holes communicating with fluids. Can seal clearances between flanges up to 0.2 mm.

LOCTITE 577
Quick anaerobic sealant for sealing threaded portions of conical or cylindrical unions up to M80. Before using it, remove any lubricant with the specific activator. After polymerisation, disassembly may result rather difficult, so heating may be necessary for larger diameters.

LOCTITE 638
Anaerobic adhesive for fast and high-strength gluing of cylindrical metal joints (hub on shaft). Can glue together parts with clearance ranging between 0.1 and 0.25 mm.

LOCTITE 648
Anaerobic adhesive for fast and medium-strength gluing of cylindrical metal joints (hub on shaft). Can glue together parts with radial clearance below 0.1 mm.

AREXONS (REPOSITIONABLE JOINTING COMPOUND FOR SEALS)
Solvent-based sealing compound for elastic seals, drying through evaporation. Used for sealing the outer diameter of sealing rings for rotating shafts with outer metal reinforcement.

SILICONE
Semi-fluid adhesive material used for sealing and filling and to protect components from environmental and physical elements. Polymerises with non-corrosive dampness.

TECNO LUBE/101 (SILICONE-BASED GREASE)
Highly adhesive synthetic grease, with silicone compounds added.

Applied to adjustment screws with hole communicating with oil-type fluids.

Used when frequent adjusting is required.

MOLIKOTE (DOW CORNING)
Lubricating compound containing molybdenum disulphide, used to lubricate articulation pins and to prevent sticking and oxidation of parts that are not lubricated on a regular basis.

(LITHIUM-BASED) GREASE
Applied to bearings, sliding parts and used to lubricate seals or parts during assembly.

SAFETY PRECAUTIONS

1- During all operations described in this manual, the axle should be fastened onto a trestle, while the other parts mentioned should rest on supporting benches.

2- When removing one of the arms, an anti-tilting safety trestle should be placed under the other arm.

3- When working on an arm that is fitted on the machine, make sure that the supporting trestles are correctly positioned and that the machine is locked lengthways.

4- Do not admit any other person inside the work area; mark off the area, hang warning signs and remove the ignition key from the machine.

5- Use only clean, quality tools; discard all worn, damaged, lowquality or improvised wrenches and tools. Ensure that all torque wrenches have been checked and calibrated.

6- During maintenance operations, always wear protective glasses, safety footwear, protective gloves and all P.P.E. (Personal Protective Equipment) in function of the risks which the workers may be exposed to.

7- Should you stain a surface with oil, remove marks straight away.

8- Dispose of all lubricants, seals, rags and solvents once work has been completed. Treat them as special waste and dispose of them according to the relative law provisions obtaining in the country where the axles are being overhauled.

9- Make sure that only weak solvents are used for cleaning purposes; avoid using turpentine, dilutants and toluol, xylolbased or similar solvents; use light solvents such as Kerosene, mineral spirits or water-based, environment friendly solvents.

10- For the sake of clarity, the parts that do not normally need to be removed have not been reproduced in some of the diagrams.

11- After repair work has been completed, accurately touch up any coated part that may have been damaged.

12- Follow all safety instructions in the Original Equipment Manufacturer (OEM) manual that came with the vehicle.

13- Before draining oil, release the internal pressure, for details see OIL DRAINING MANDATORY PROCEDURE.

	DANGER	Indicates an imminently hazardous situation which, if not avoided, will result in death or serious injury.
	WARNING	Indicates an imminently hazardous situation which, if not avoided, could result in death or serious injury
İ	CAUTION	Indicates a situation which, if not avoided, may result in damage to components.
	NOTICE	Indicates information which may make product service easier to perform.

CHANGING OIL

⚠WARNING

Hot oil components can cause injury. Avoid skin contact.

NOTE:

Make sure all fluids are contained during inspection, maintenance, tests, adjustment and repair of the product. Prepare a suitable container to collect the fluid before removing any component containing fluids. Dispose of all fluids following legal and local regulations.

DRAINING

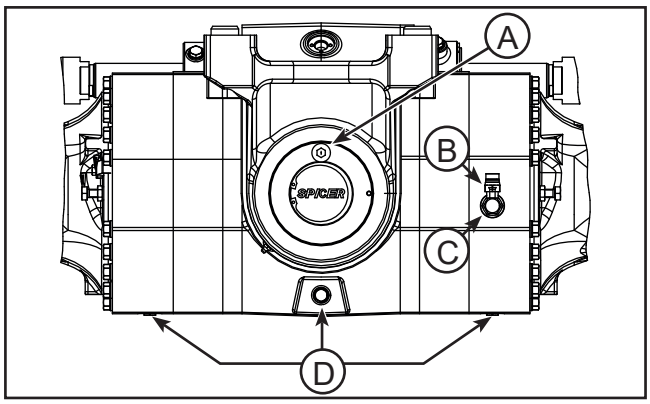

1 - Before draining the oil, remove the level plugs (A) to release any internal pressure.

FOR MODELS WITH OIL FITTING ELBOW:

2 - Remove the oil fitting elbow (B).

NOTE:

DO NOT REMOVE THE ELBOW FITTING (C).

FOR STANDARD MODELS: REMOVE THE OILFITTING PLUG IN POSITION (C).

3 - To drain the oil from the central part of the axle, slacken and remove the drain plugs (D).

FILLING

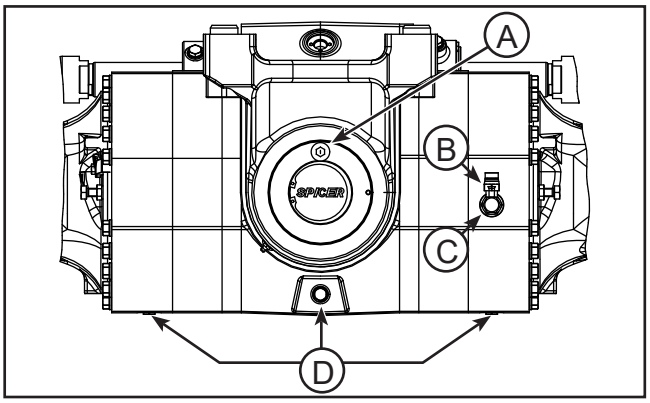

1 - Tighten the drain plugs (D) to a torque of 50 - 60 N·m.

2 - Fill up the axle body (A) wth new oil. When filling the axle with oil, WAIT FOR 15 MINUTES for the oil to flow through the differential and the brakes into the axle arms.

3 - Check carefully that the oil is at the correct level and top up if necessary.

NOTE:

On models with oil fitting elbow, see the illustration below fot the fill level and then tighten the oil fitting elbow to 50 - 70 N·m.

4 - Fit the oil p ue of 50 - 60 N·m.

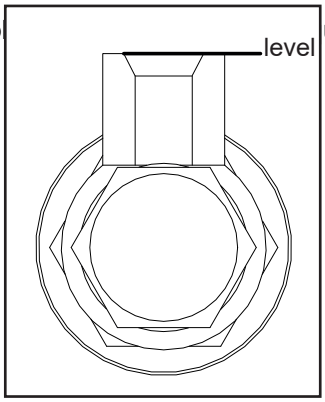

BRAKE WEAR CHECK PROCEDURE

⚠CAUTION

Perform all operations on both arms.

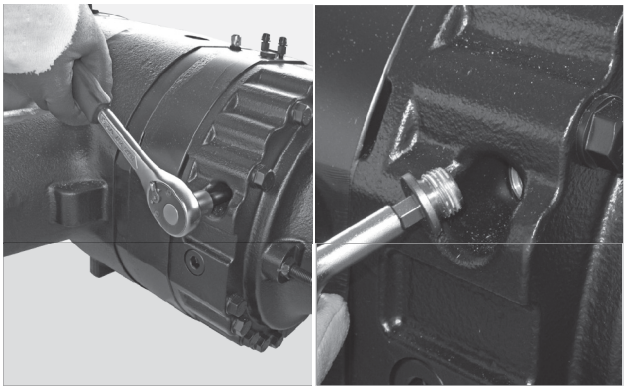

FIGURE 1: Remove the inspection plug.

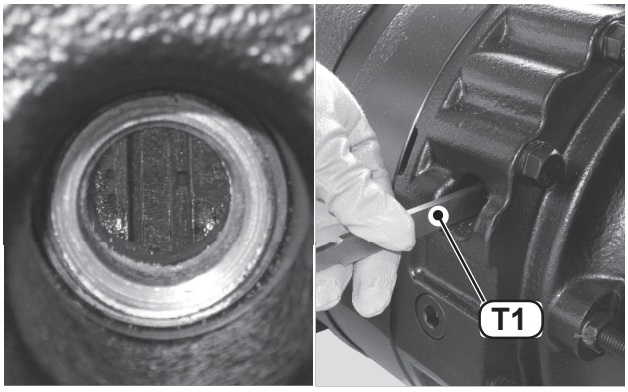

FIGURE 2: Apply the parking brake (or have someone hold the service brake) and with either brake applied, check the distance between discs using tool T1 (See drawing T1 p. 22). Minimum distance: 5,2 mm

⚠CAUTION

Replace the braking disks and the intermediate disks on both sides if necessary. See SERVICE BRAKE AND NEGATIVE PARKING BRAKE (OLD MANUAL ADJUSTER) p. 23 and SERVICE BRAKE AND NEGATIVE PARKING BRAKE (NEW SELF ADJUSTING) p. 45.

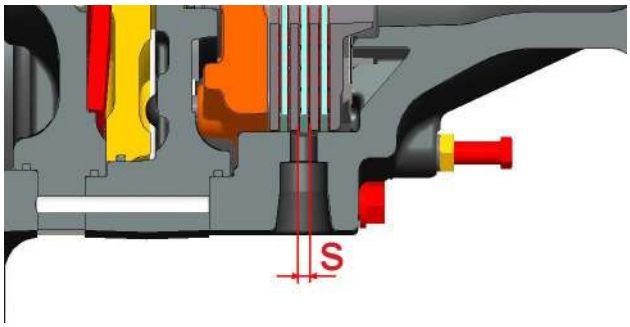

FIGURE 3: Checking brake distance with the T1 go / no-go gauge.

FIGURE 4: Install the inspection plug. Torque wrench setting for screws: 35 - 50 N·m.

SPECIAL TOOLS

T1

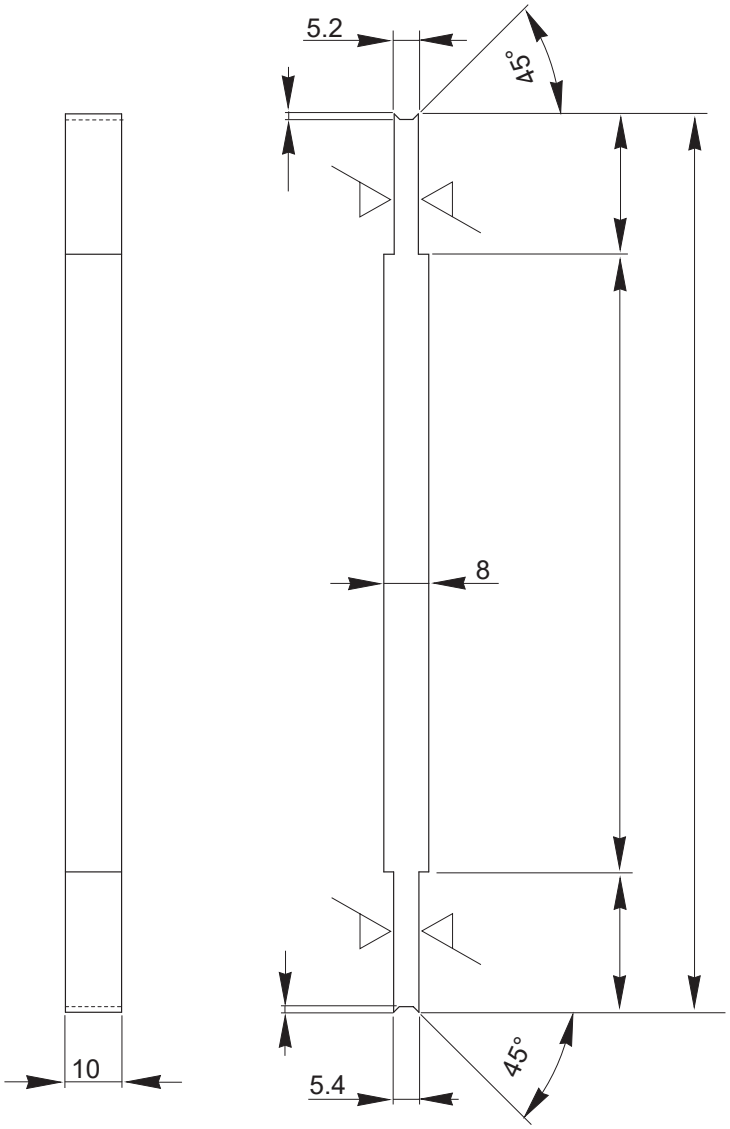

SERVICE BRAKE AND NEGATIVE PARKING BRAKE (OLD MANUAL ADJUSTER)

EXPLODED VIEW

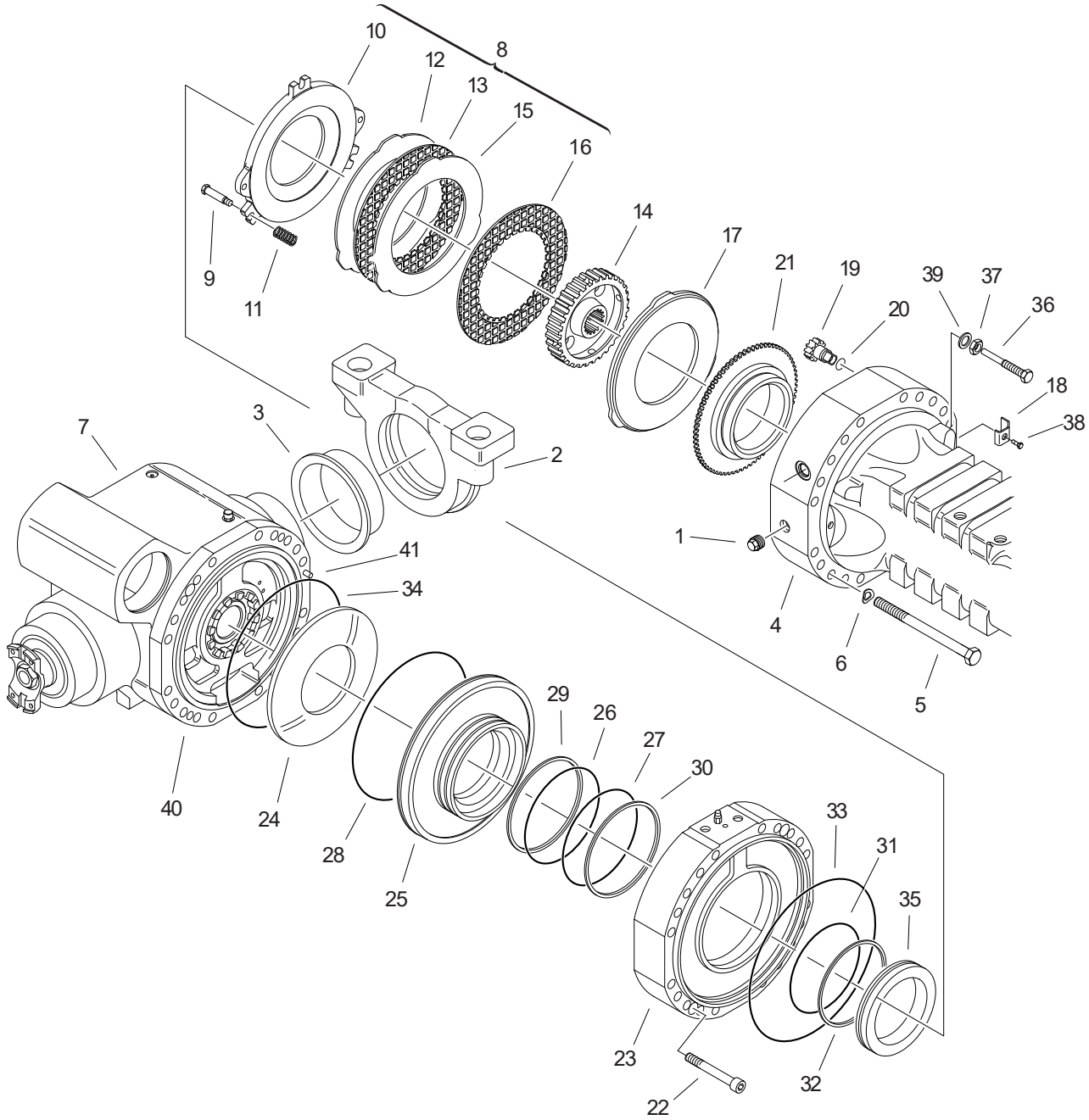

DISASSEMBLY

⚠DANGER

Before maintaining brakes, when the axle is installed on the vehicle, follow all safety instructions in the Original Equipment Manufacturer (OEM) manual that came with the vehicle.

⚠CAUTION

Before draining oil, release the internal pressure, for details see OIL DRAINING MANDATORY PROCEDURE p. 14.

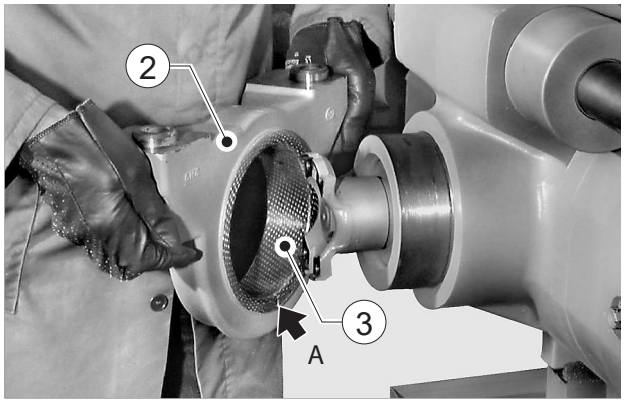

FIGURE 5: REPLACING DISCS
Remove the rocking support (2) from non-drive end.

NOTE:

If bushing (3) will be replaced because it is worn, write down direction of installation of joint split "A".

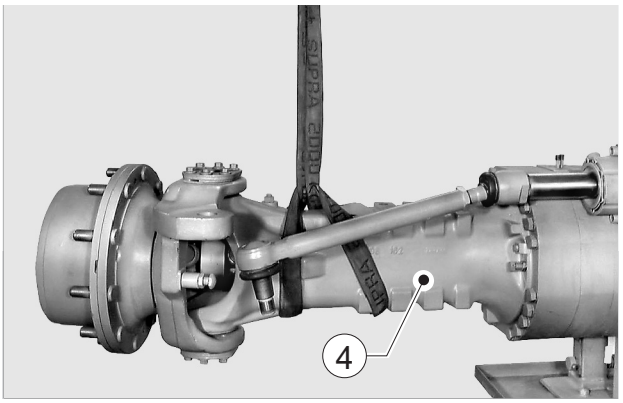

FIGURE 6: Disconnect steering bar pivots from the steering cases (See STEERING CYLINDER (STANDARD VERSION) p. 79).
Sling arm (4) to be removed and slightly tighten the sling

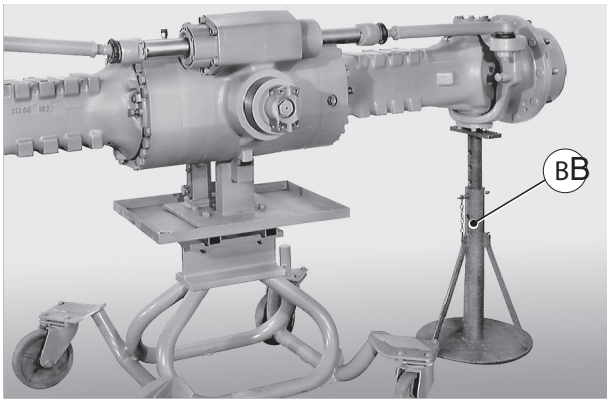

FIGURE 7: If axle is positioned on an overhaul bench, place a safety anti-tilting stand "B" under the arm that remains connected and block wheels, if any.

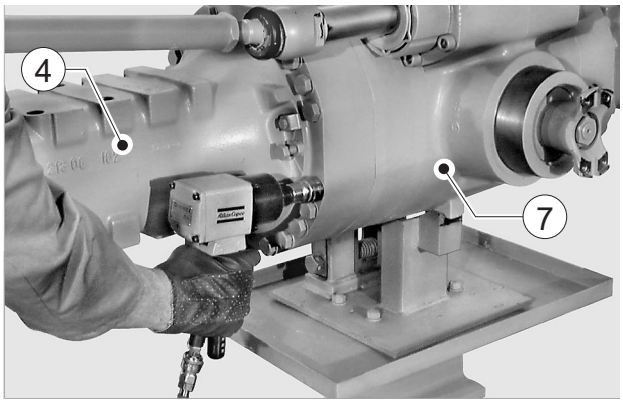

FIGURE 8: Loosen and remove the screws (5) and washers (6) that fix the arm (4) to the main body (7).

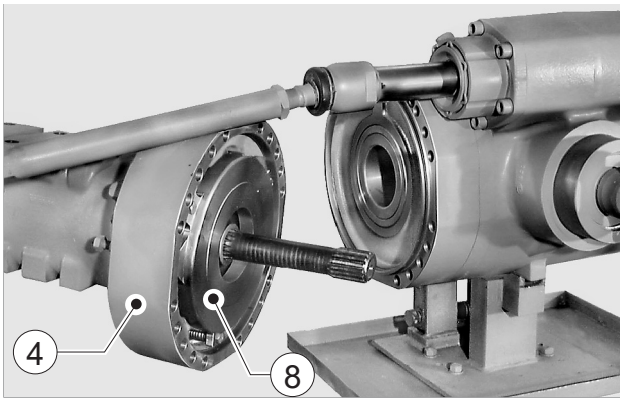

FIGURE 9: Remove arm (4) along with brake discs pack (8). Lay the arm on a workbench.

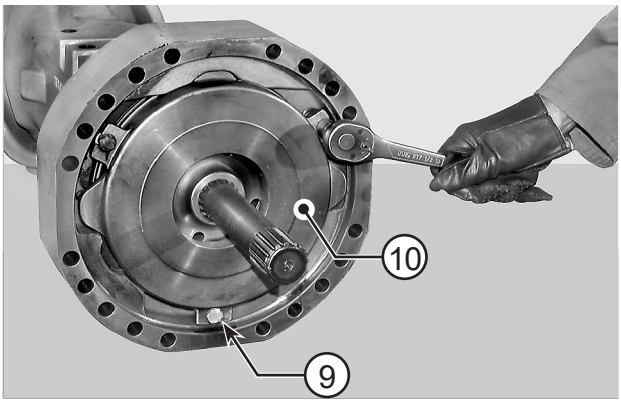

FIGURE 10: Loosen check and guide screws (9) of thrust disc (10).

⚠CAUTION

Loosen screws (9) in several stages, sequentially and slowly.

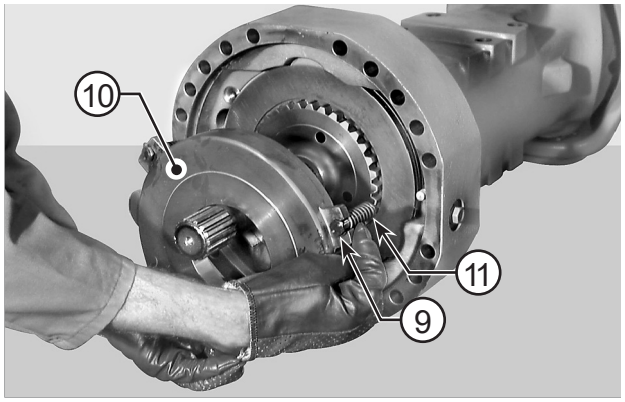

FIGURE 11: Remove the thrust disc (10) along with screws (9) and springs (11).

NOTE:

Write down direction of installation.

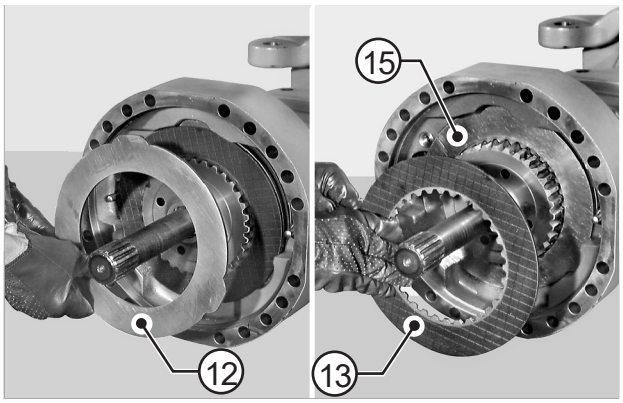

FIGURE 12: Remove in sequence: first intermediate disc (12), friction disc (13), and second intermediate disc (15).

⚠CAUTION

Check friction disc thickness; if thickness is 5 mm or less, replace discs on both sides.

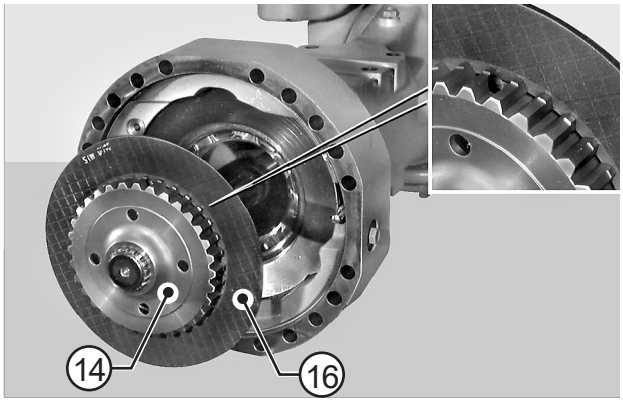

FIGURE 13: Remove both coupling (14) and friction disc (16) at the same time.

⚠CAUTION

Write down direction of installation of coupling (14) in relation to brake disc (16).

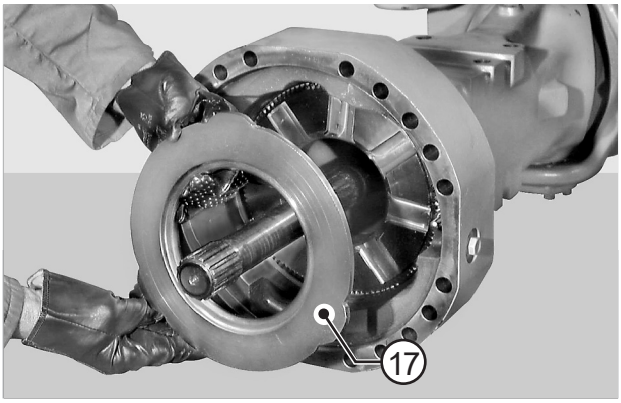

FIGURE 14: Remove end counter plate (17).

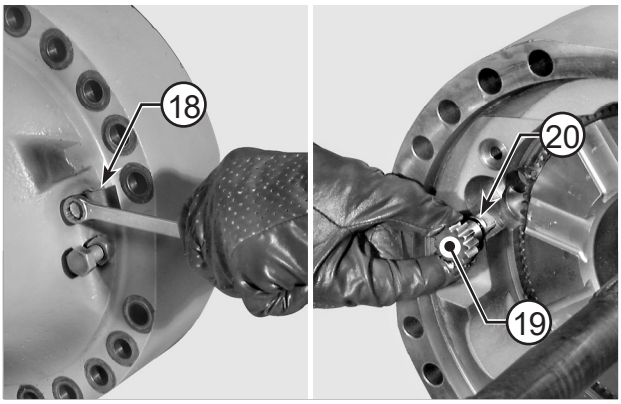

FIGURE 15: Only if necessary, remove catch (18) and pinion (19) for the brake adjustment and replace the o-ring (20).

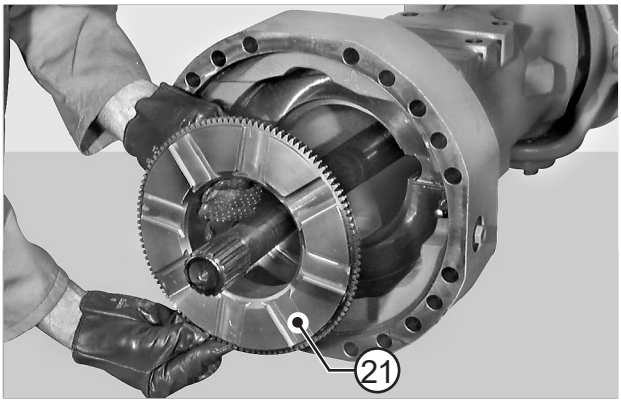

FIGURE 16: Only if necessary, remove ring (21) for the brake adjustment.

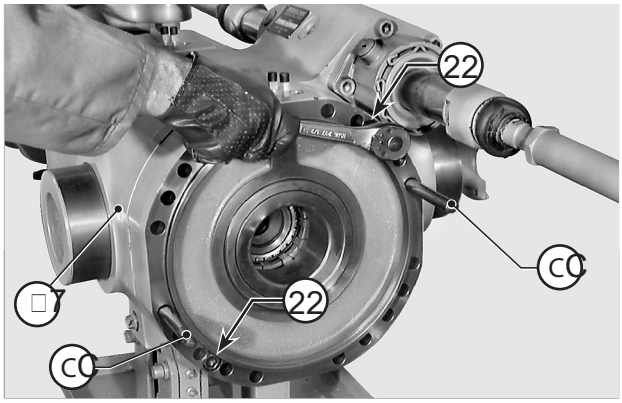

FIGURE 17: REPLACING BRAKE SEALS
Tighten two safety studs "C" in two opposite holes on the main body (7). Loosen screws (22) in an alternate manner until the thrust exerted by the Belleville washer is eliminated, then remove the screws.

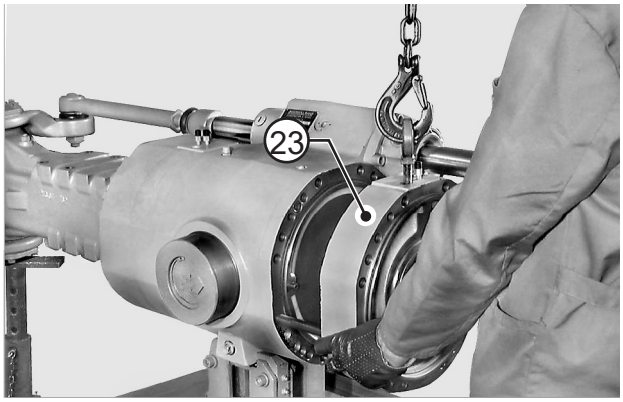

FIGURE 18: Tighten an eye-bolt in either of the connection holes of the braking system and connect the eye-bolt to a hoist.
Extract screws "C" and remove brake cylinder (23).

NOTE:

Support the Belleville washers (24), as they may fall.

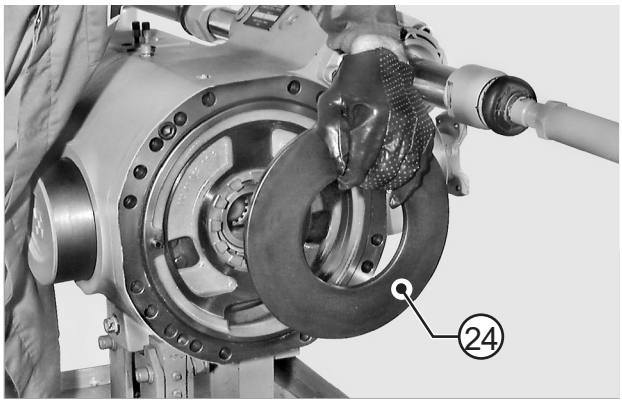

FIGURE 19: Remove Belleville washer (24) from the main body (7).

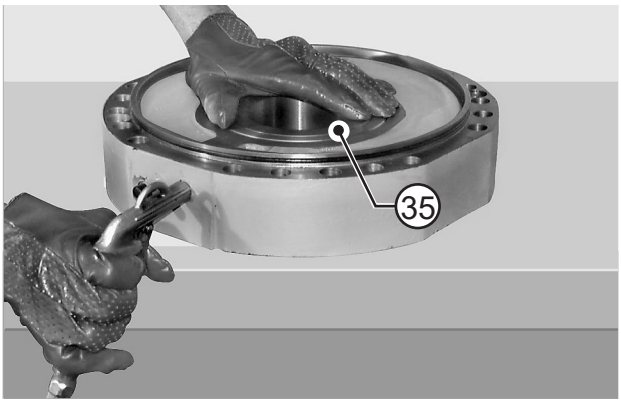

FIGURE 20: Carefully introduce low pressure compressed air through the hole of service brake and eject piston (35).

NOTE:

Replace seals at each disassembly.

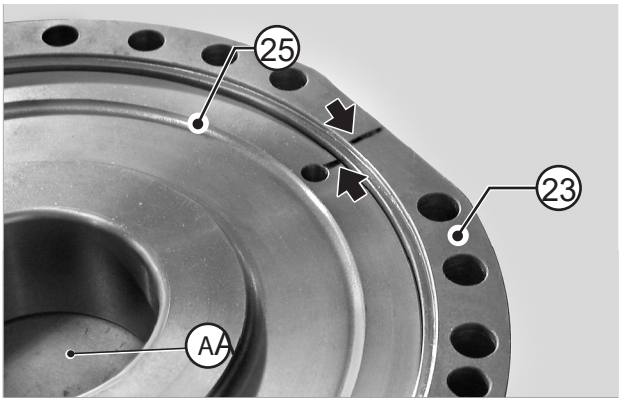

FIGURE 21: Turn assembly (23) over and place it on a support "A" 125 x 50 mm made of tender material (aluminium or copper).
Make positional marks across brake cylinder (23) and piston (25) to mark the position of the pin hole.

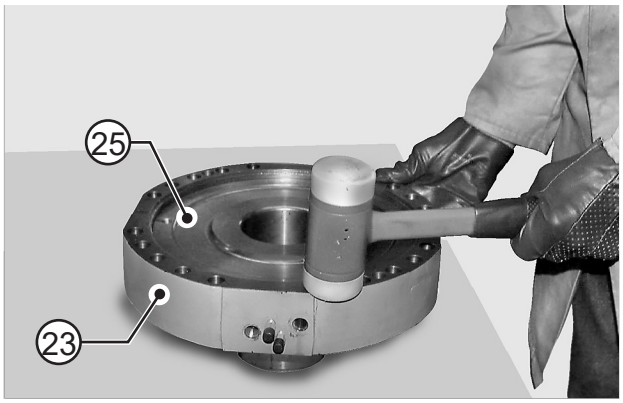

FIGURE 22: Hammer the brake cylinder (23) with a plastic hammer until the negative brake piston (25) comes out.

NOTE:

Tap around the whole rim and replace seals at each disassembly.

ASSEMBLY

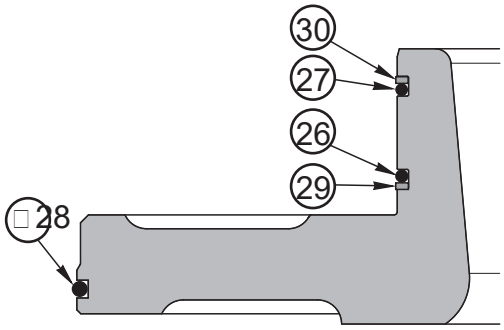

FIGURE 23: Thoroughly clean negative brake piston as well as beds and seal seats.
Replace o-ring seals (26, 27, 28) as well as anti-extrusion rings (29, 30), keeping to assembling positions.

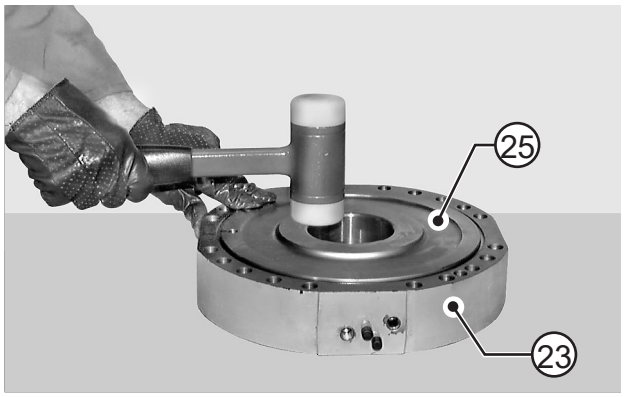

FIGURE 24: Lubricate seals (26, 27, 28) with oil and, using a plastic hammer, install piston (25) into brake cylinder (23).

⚠CAUTION

1- Hammer around the whole rim
- Check match marks of guide pin hole

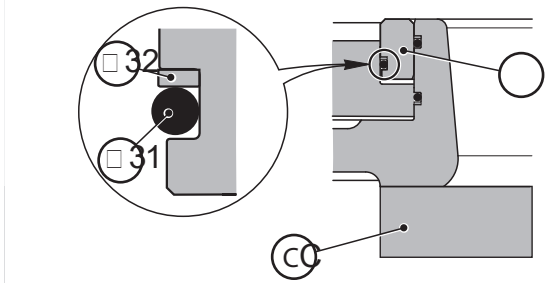

FIGURE 25: Turn the kit over and lay it on a support "C". Clean piston (35) of service brake as well as bed and seal seat. Replace o-ring (31) and anti-extrusion ring (32) observing assembling position.

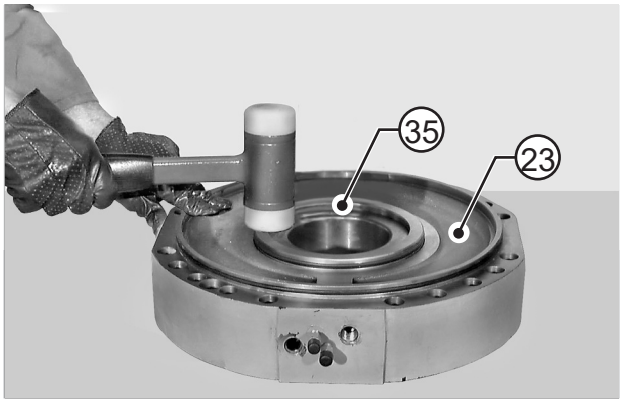

FIGURE 26: Lubricate seal (31) with oil and install piston (35) in brake cylinder (25) using a plastic hammer.

⚠CAUTION

1- Hammer around the whole rim
2 - Check direction of installation

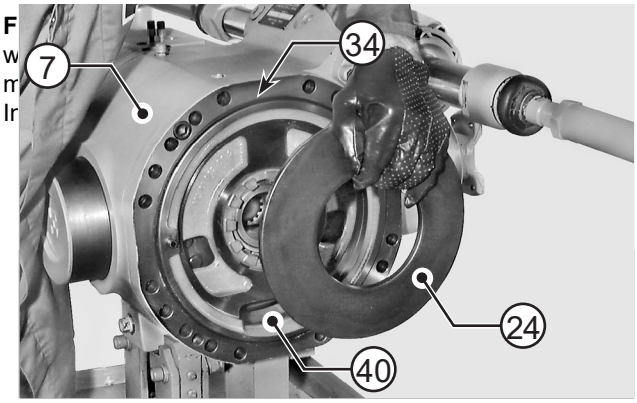

⚠CAUTION

The outer rim of the Belleville washer must be centered in the intermediate cover (40).

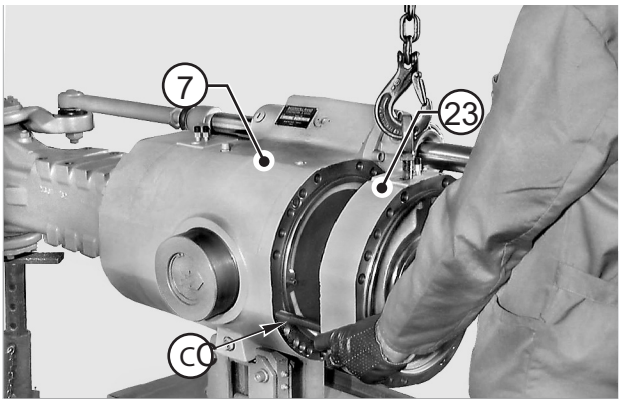

FIGURE 28: Hoist the brake cylinder (23) and position it opposite the main body (7). Tighten two safety studs "C" in the main body (7) and disconnect from the hoist.

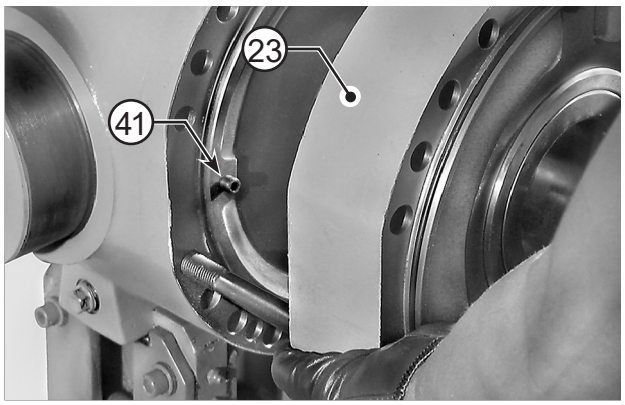

FIGURE 29: Push cylinder unit (23) to stop and check that the anti-rotation pin (41) is centered.

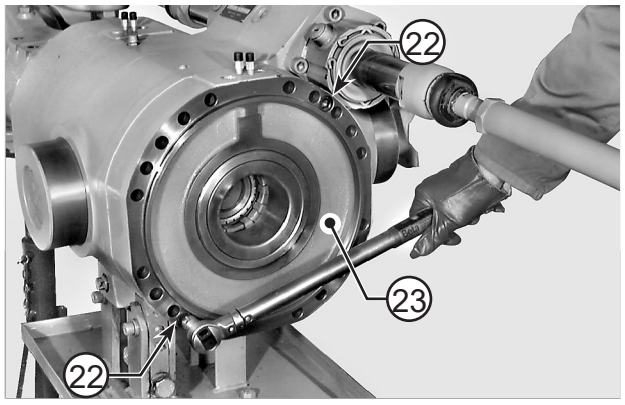

FIGURE 30: Attach cylinder (23) with screws (22) tightened and coated with Loctite 242 to a torque of 130 N·m. Remove the studs "C" used for assembly.

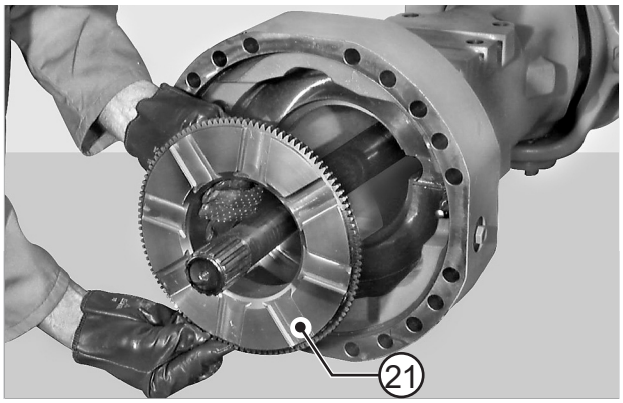

FIGURE 31: Only if adjustment ring has been removed, tighten the ring (21) for the brake adjustment.

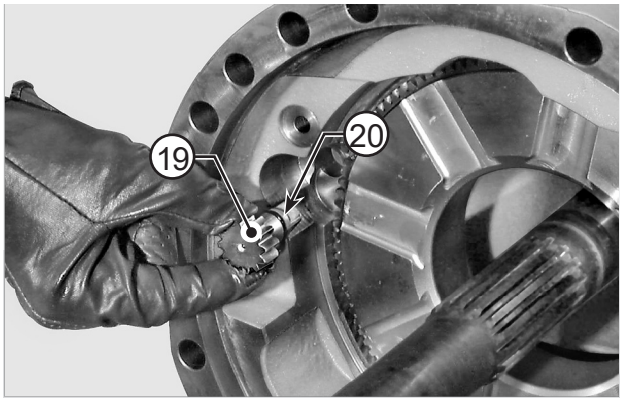

FIGURE 32: Only if pinion has been removed, install pinion (19) with new o-ring (20) coated with grease.

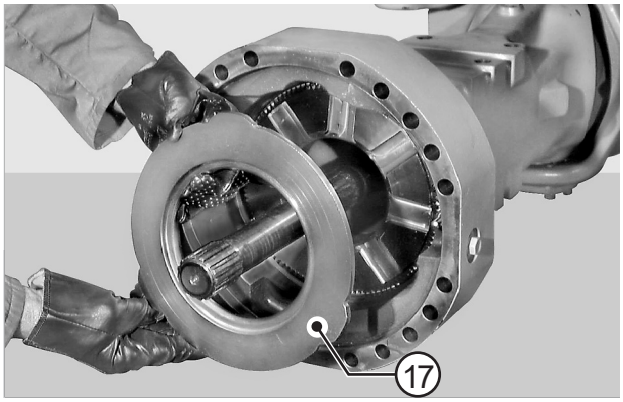

FIGURE 33: Install the thickest counter plate (17).

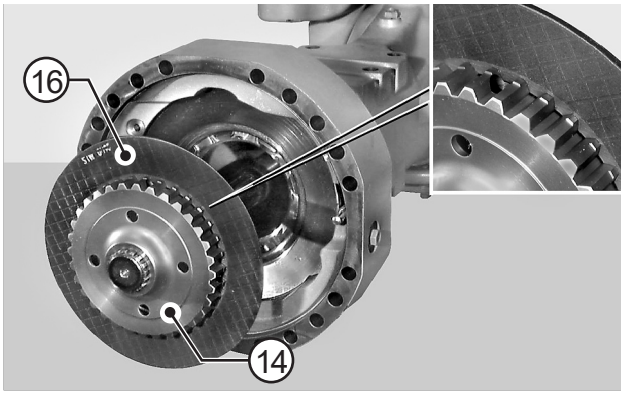

FIGURE 34: Lubricate the friction disc (16) with oil SAE 85W90; install friction disc and coupling (14).

⚠CAUTION

Check coupling's direction of installation carefully.

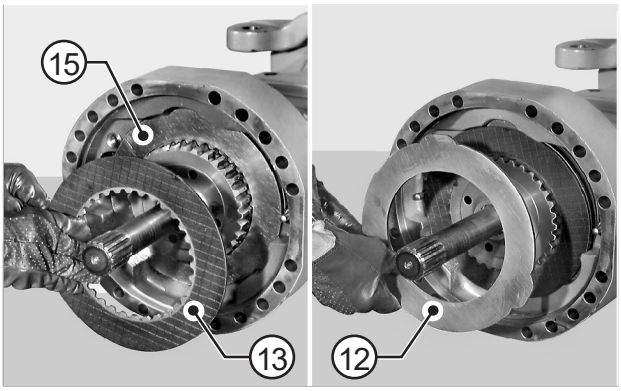

FIGURE 35: Install parts in the following sequence: intermediate disc (15), friction disc (13), and second intermediate disc (12).

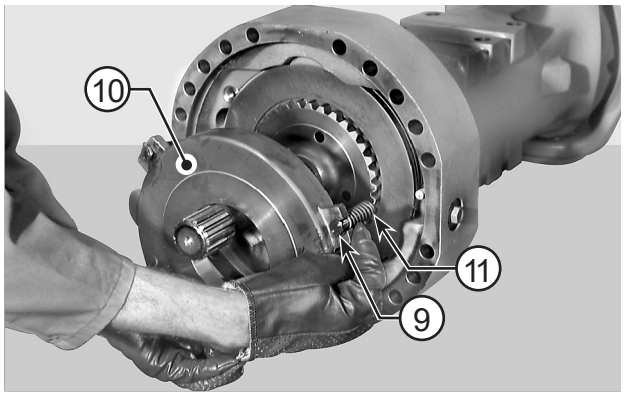

FIGURE 36: Install the thrust disc (10), springs (11), and screws (9).

⚠CAUTION

Orient disc (10) to align on horizontal axis the negative brake release screws (36) recesses.

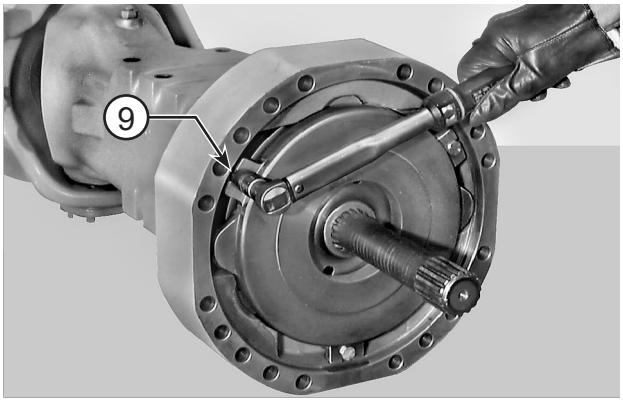

FIGURE 37: Tighten screws (9) sequentially and in several stages to a torque of 20 - 30 N·m.

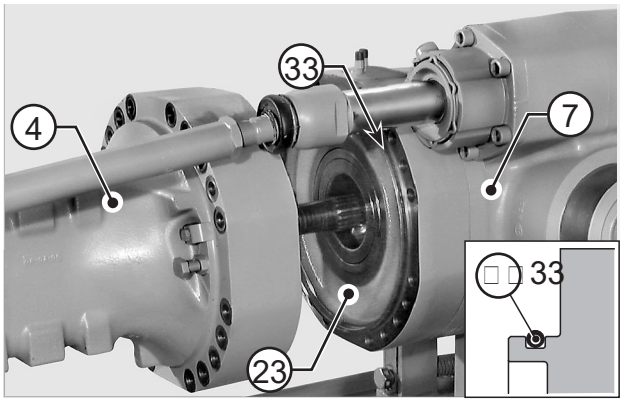

FIGURE 38: Fit a new o-ring (33) on the brake cylinder (23). Connect the complete arm (4) to a hoist and install it in the main body (7).

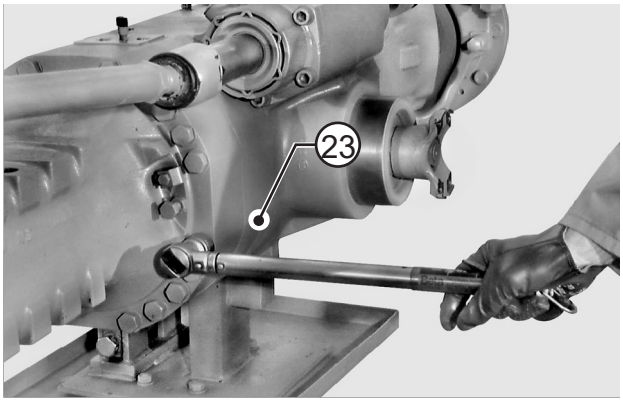

FIGURE 39: Fasten the arm to the brake cylinder (23) and attach the arm with screws and washers (6).

NOTE:

Tighten screws to make the coupling faces just touch each other.

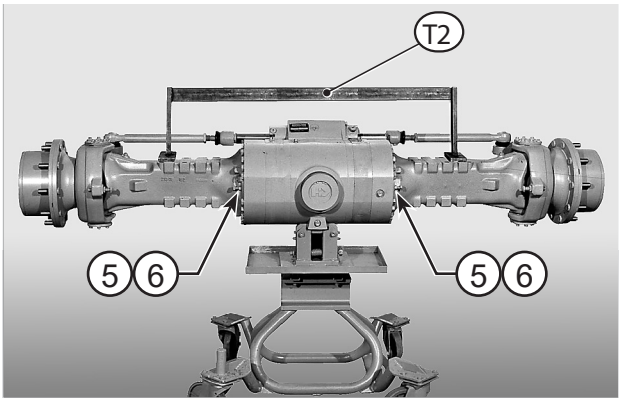

FIGURE 40: Using tool T2 (See drawing T2 p. 32) check that the arms are level, then finally lock them with screws (5) and washers (6) using the criss-cross method. Tightening torque: 283 - 312 N·m.

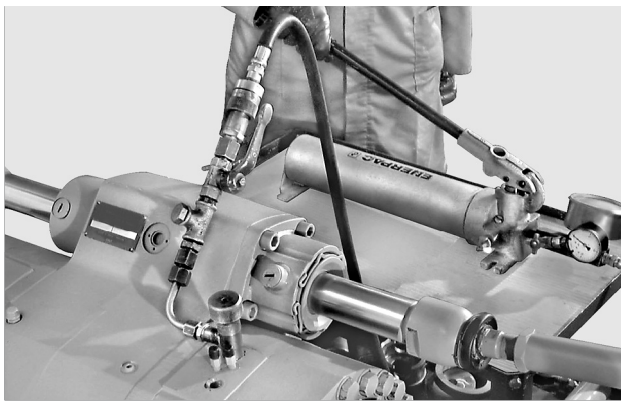

FIGURE 41: ADJUSTING BRAKES
When adjusting the brakes, connect a hydraulic pump to the access hole of the negative brake and introduce pressure at 20 - 25 bar to release the brake disc.

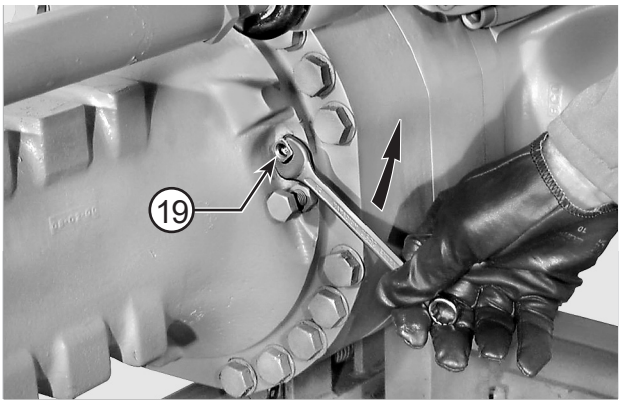

FIGURE 42: Rotate the pinion (19) counter-clockwise until it reaches the end of stroke and a slight torque is obtained.

NOTE:

All existing clearances between discs are eliminated as a result of this operation.

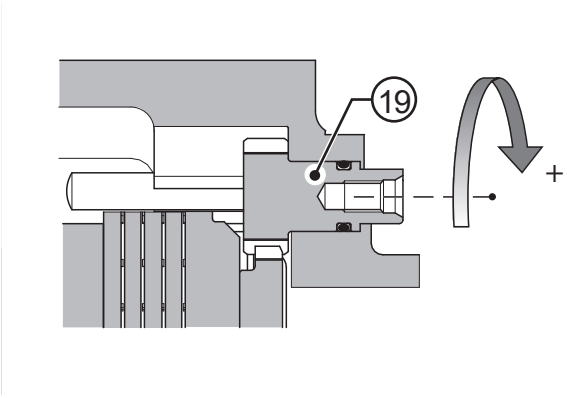

FIGURE 43: Rotate pinion (19) clockwise to obtain the accurate clearance.
Axles with two friction discs: 3 turns + 3 sides; clearance: 0.75 mm;
Axles with three friction discs: 5 turns; clearance: 1 mm.

NOTE:

Every turn of the pinion produces a clearance of 0.2 mm.

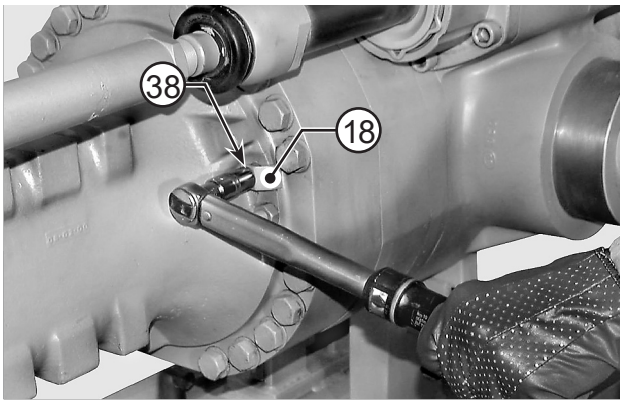

FIGURE 44: Release pressure, fit the catch (18) and lock with screw (38) coated with Loctite 242. Tighten screw to a torque of 20 - 30 N·m.

SPECIAL TOOLS

T1

P/N: 2362

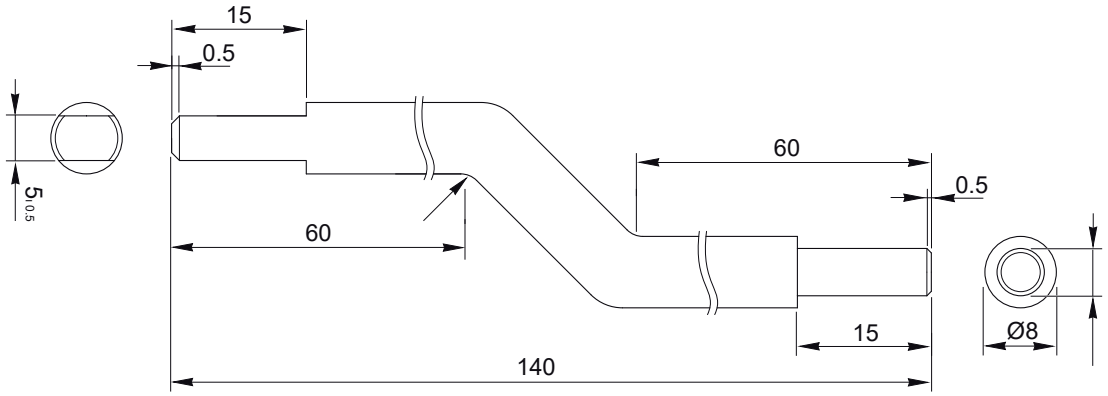

T2

P/N: 2363

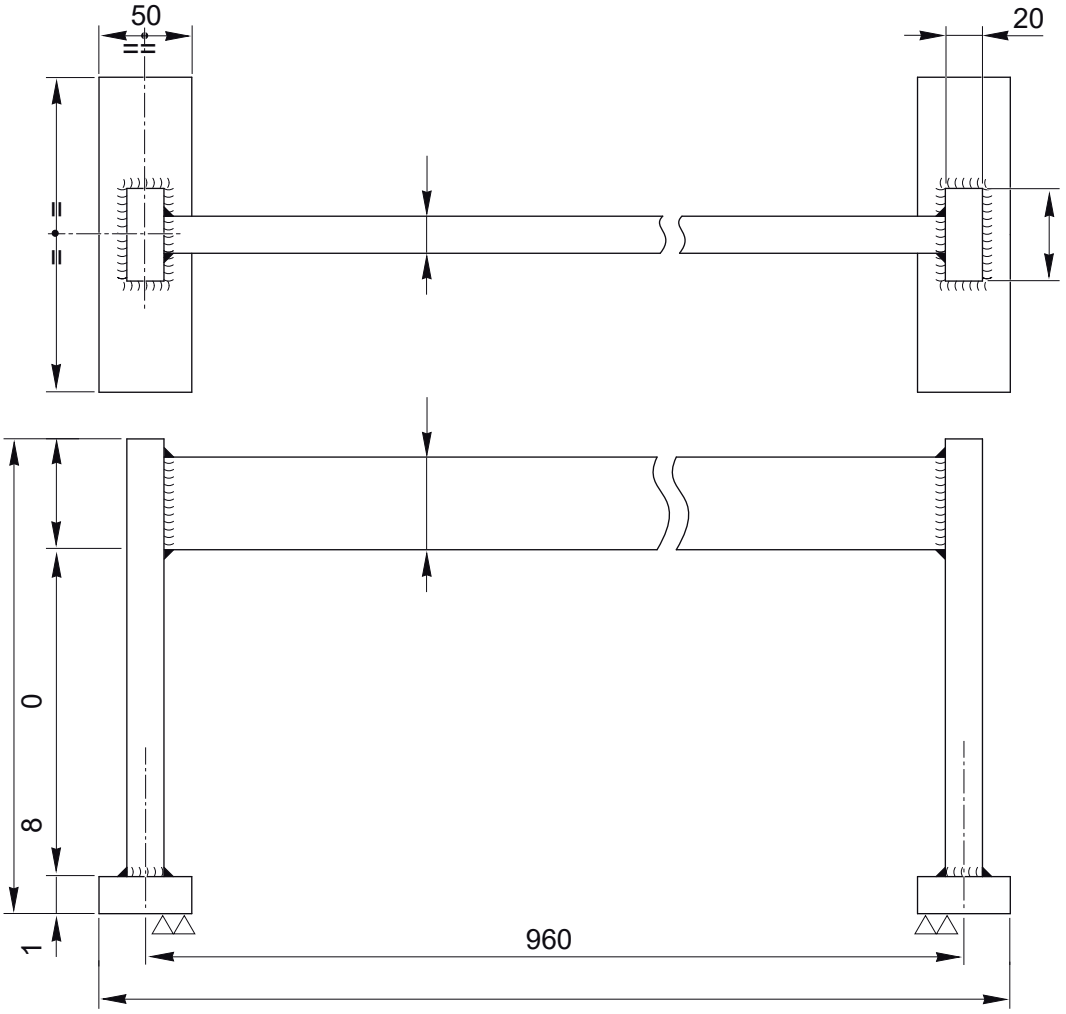

COMPLETE STEERING CASE

EXPLODED VIEW

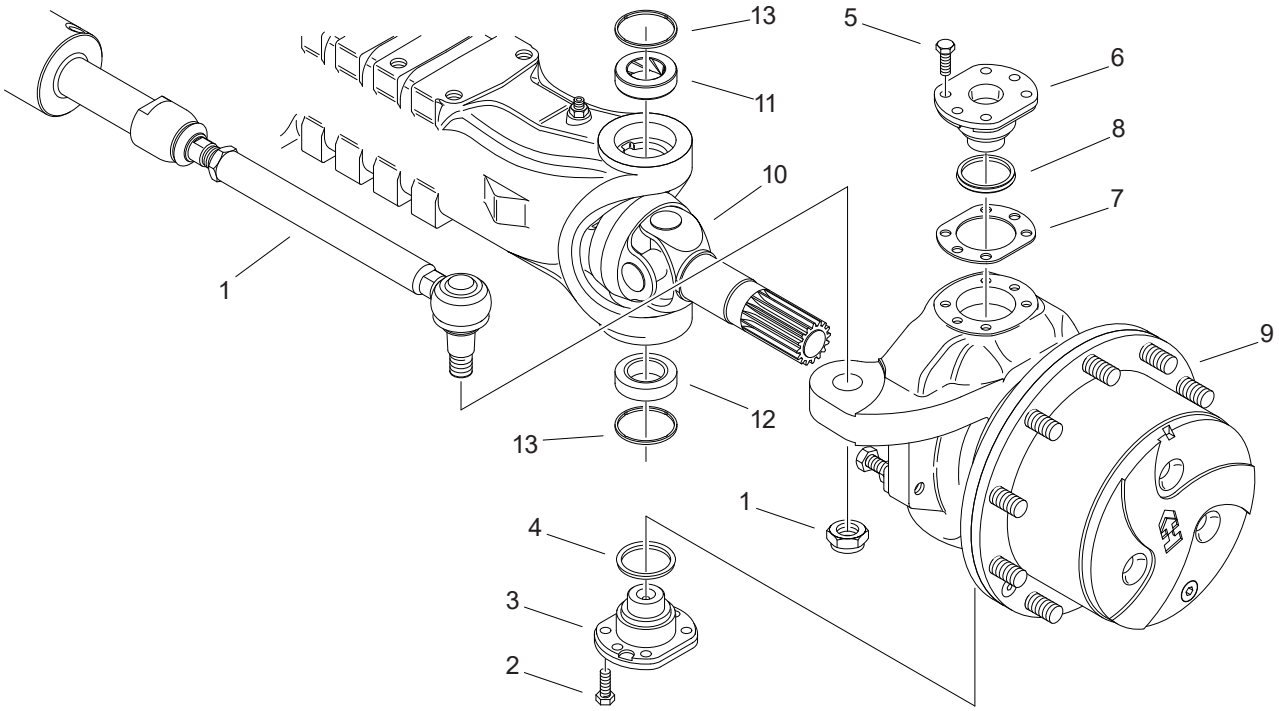

DISASSEMBLY

⚠CAUTION

Before draining oil, release the internal pressure, for details see OIL DRAINING MANDATORY PROCEDURE p. 14.

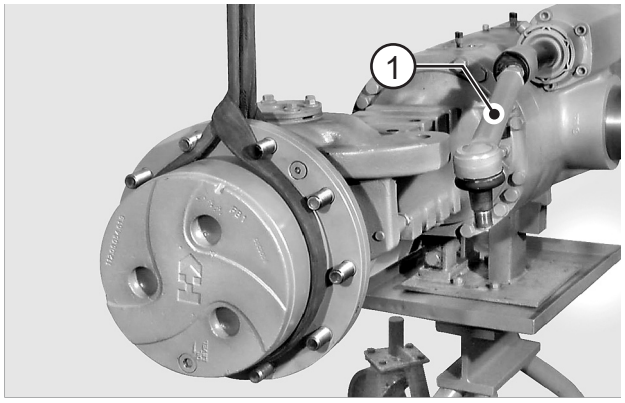

FIGURE 1: Disconnect the pivot of the steering bar (1) from the steering case. (See STEERING CYLINDER (STANDARD VERSION) p. 79).
Sling the whole unit (1) and connect it to a hoist; then lightly tighten the sling rope.

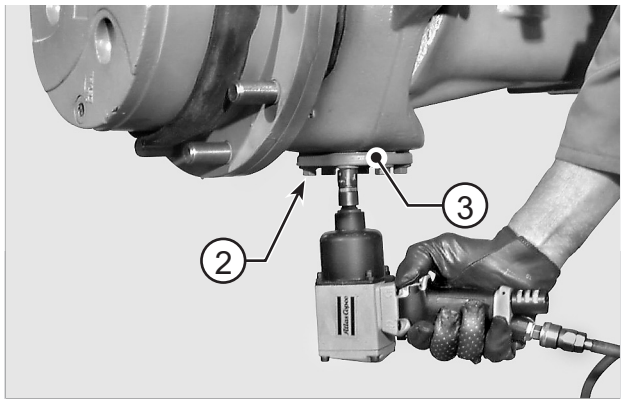

FIGURE 2: Loosen and remove the check screws (2) of the lower pivot pin (3).

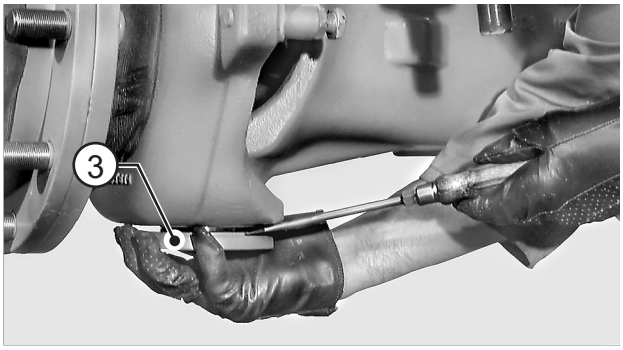

FIGURE 3: Insert a screwdriver or lever alternately in the slots provided and pry out the lower pivot pin (3) along with the dust ring (4).

⚠CAUTION

Replace the ring (4) at each disassembly.

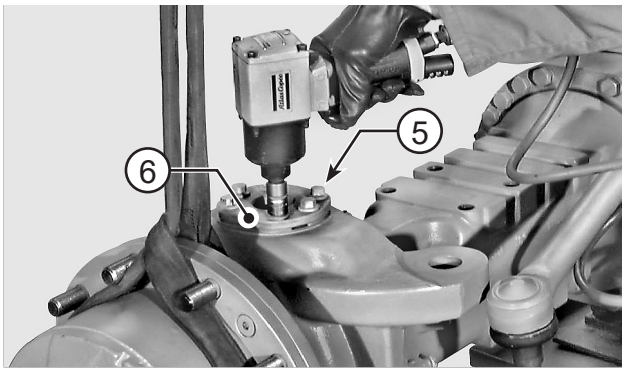

FIGURE 4: Loosen and remove the check screws (5) of the upper pivot pin (6).

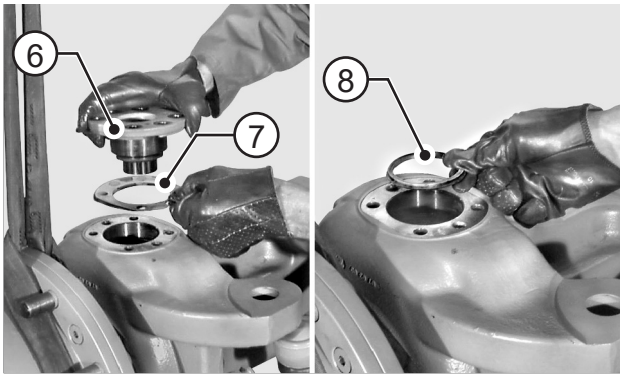

FIGURE 5: With the same method used for the lower pivot pin, remove the complete pivot pin (6), shims (7), and dust

⚠CAUTION

Replace ring (8) at each disassembly.

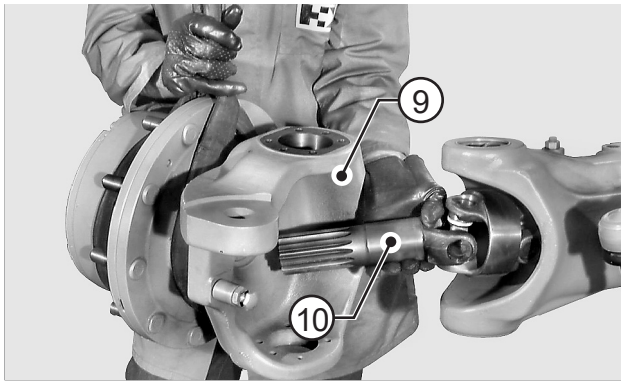

FIGURE 6: Remove the complete steering case (9) by drawing it out from the twin joint (10).

⚠CAUTION

For twin joint seal ring replacement, see PLANETARY REDUCTION GEAR p. 65.

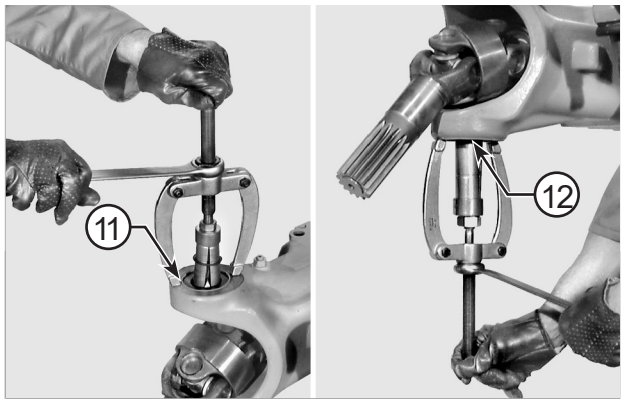

FIGURE 7: Using a puller for inner parts, remove the upper bushing (11) and lower ball bushing (12).

NOTE:

When bushings are pulled out, spacers (13) are removed as well.

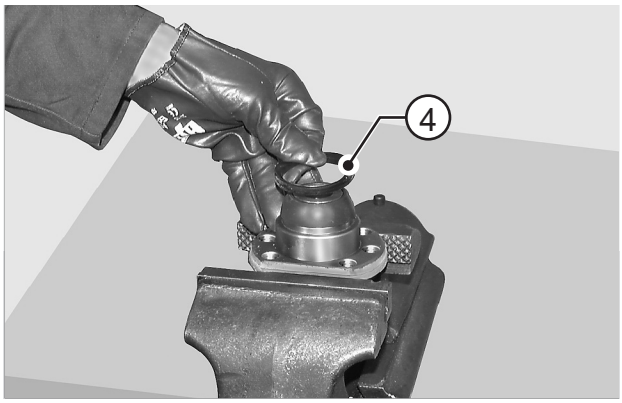

FIGURE 8: Remove the dust ring from the lower pivot pin (4).

NOTE:

Write down direction of installation.

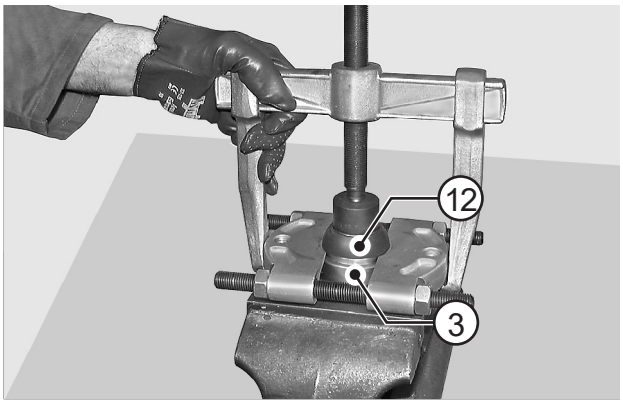

FIGURE 9: Only if round cap needs replacing, remove round cap (12) from lower pivot pin (3).

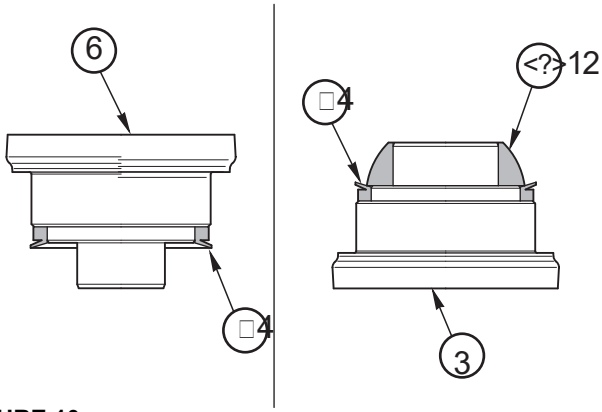

FIGURE 10:
6 - upper pivot pin
4 - dust ring
3 - lower pivot pin
12 - lower ball bushing

ASSEMBLY

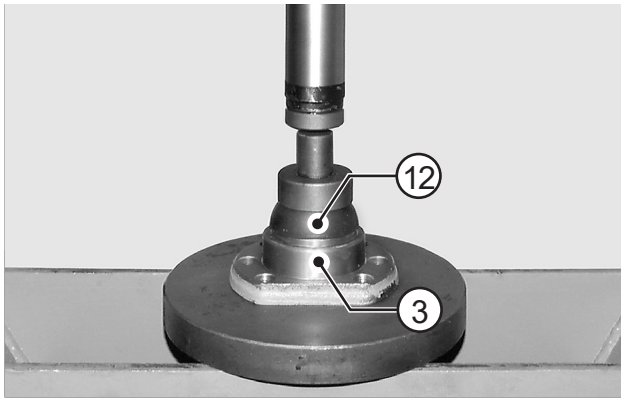

FIGURE 11: Only if lower pivot pin has been disassembled, position the lower pivot pin (3) under a press and fit the round cap (12).

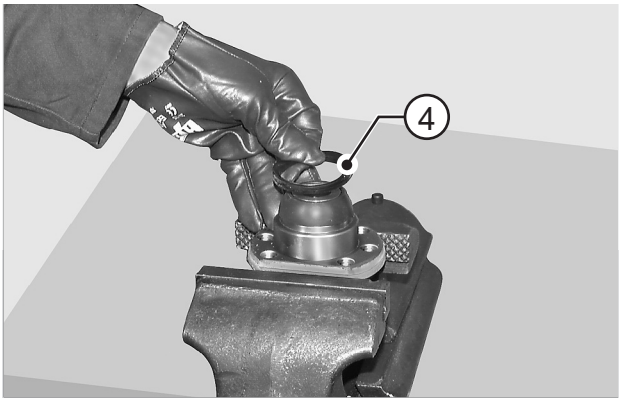

FIGURE 12: Fit the dust ring (4) onto the lower pivot pin.

NOTE:

Check orientation carefully.

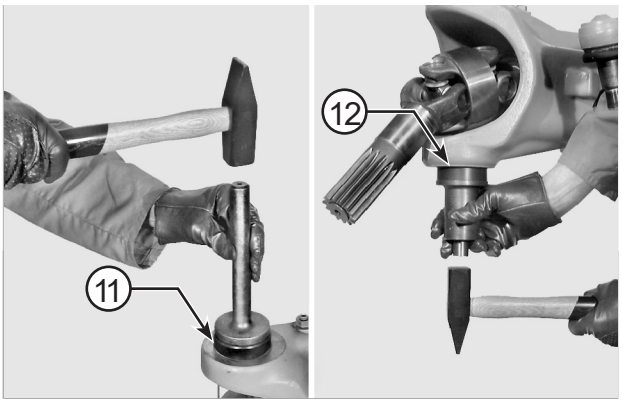

FIGURE 13: Lubricate the upper bushing (11) and round lower bushing (12). Fit them in the fulcrum holes provided on the arm, using a suitable tool.

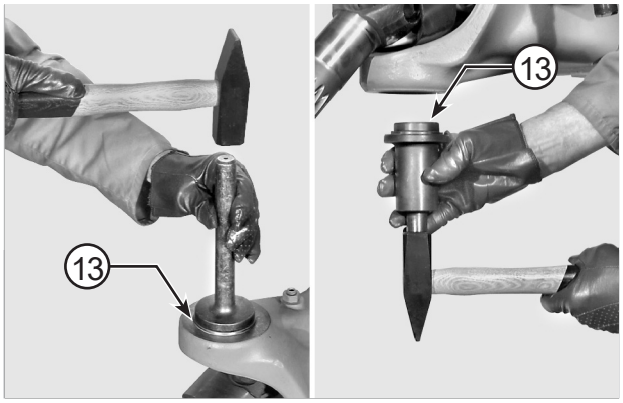

FIGURE 14: Install spacers (13) using the same tools.

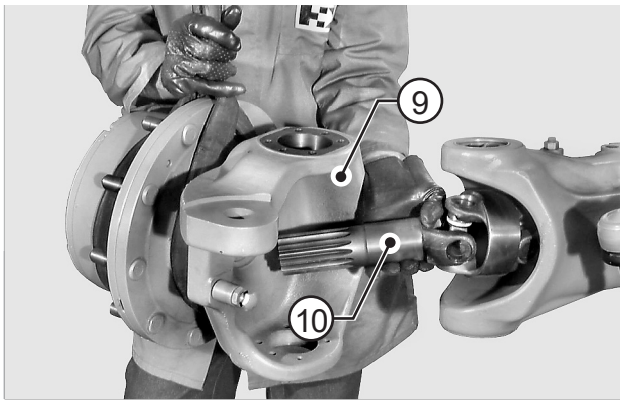

FIGURE 15: Lubricate the end part of twin u-joint (10) and mount steering case (9).

⚠CAUTION

Pay special attention not to damage the seal ring of the twin joint.

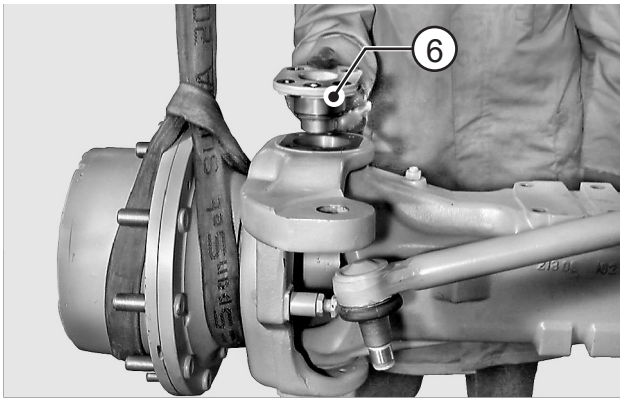

FIGURE 16: Make sure that the holes for the upper and lower fulcrum pins are perfectly coaxial, then fit the upper pivot pin (6).

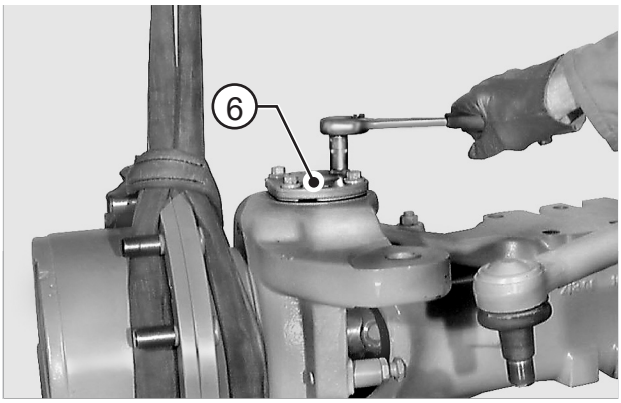

FIGURE 17: Temporarily lock the upper pivot pin (6) with four screws (5), but without shims.

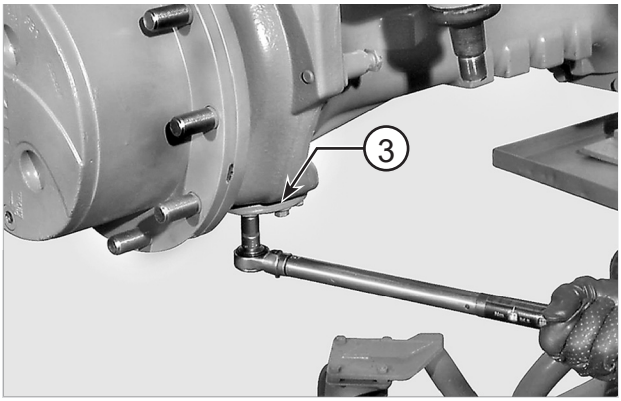

FIGURE 18: Fill the seat of the lower pivot pin with NLGI 3 EP grease and insert the complete pin (3). Apply a coat of Loctite 242 to the screws (2) and tighten until the pin is secured (3).

Loosen upper pivot pin screws by about 4 mm and lock lower screws to a torque of 130 - 142 N·m using the criss-cross method.

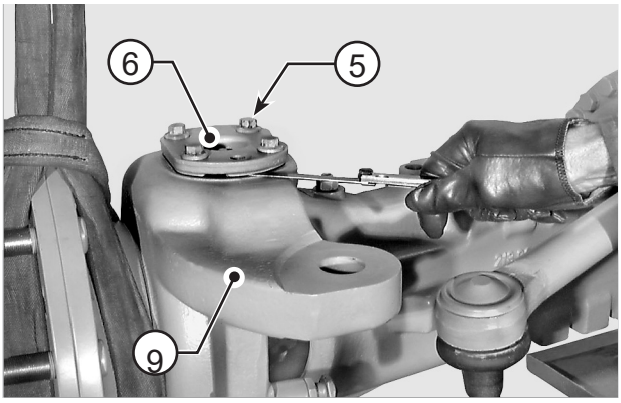

FIGURE 19: Tighten screws (5) of upper pivot pin (6) with the criss-cross method until a slight increase in the torque of the steering case (9) occurs.
Using a feeler gauge, check clearance between upper pivot flange (6) and steering case; check several points.

FIGURE 20: Calculate the average of measurements taken and subtract 0 - 0.1 mm from the resulting measurement until you have rounded off to the lower decimal figure. Make up the pack of shims choosing among available shims.

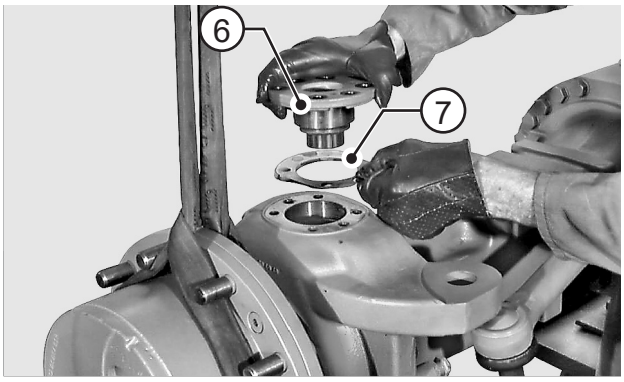

FIGURE 21: Remove upper pivot pin (6) and install the dust ring (8). Fill the seat of the upper pivot pin with NLGI 3 EP grease. Position the pack of shims (7) previously calculated and reinstall the upper pivot pin (6) with screws (5) coated with Loctite 242 to a torque of 130 - 142 N·m using the criss-cross method.

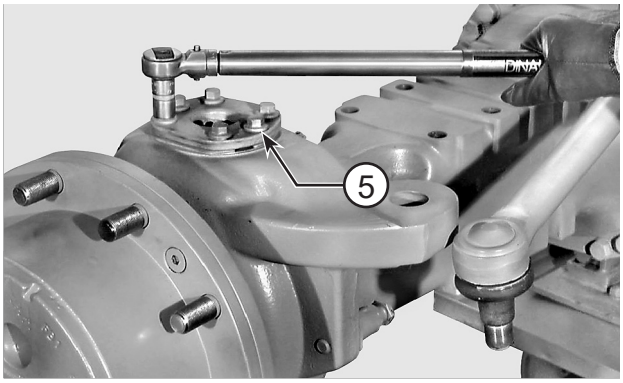

FIGURE 22: Check that the steering case is not jammed and has no vertical clearance; if necessary, recalculate shims as described earlier.

NOTE:

Thoroughly lubricate the two pivot pins with NLGI 3 EP grease.

SERVICE BRAKE

EXPLODED VIEW

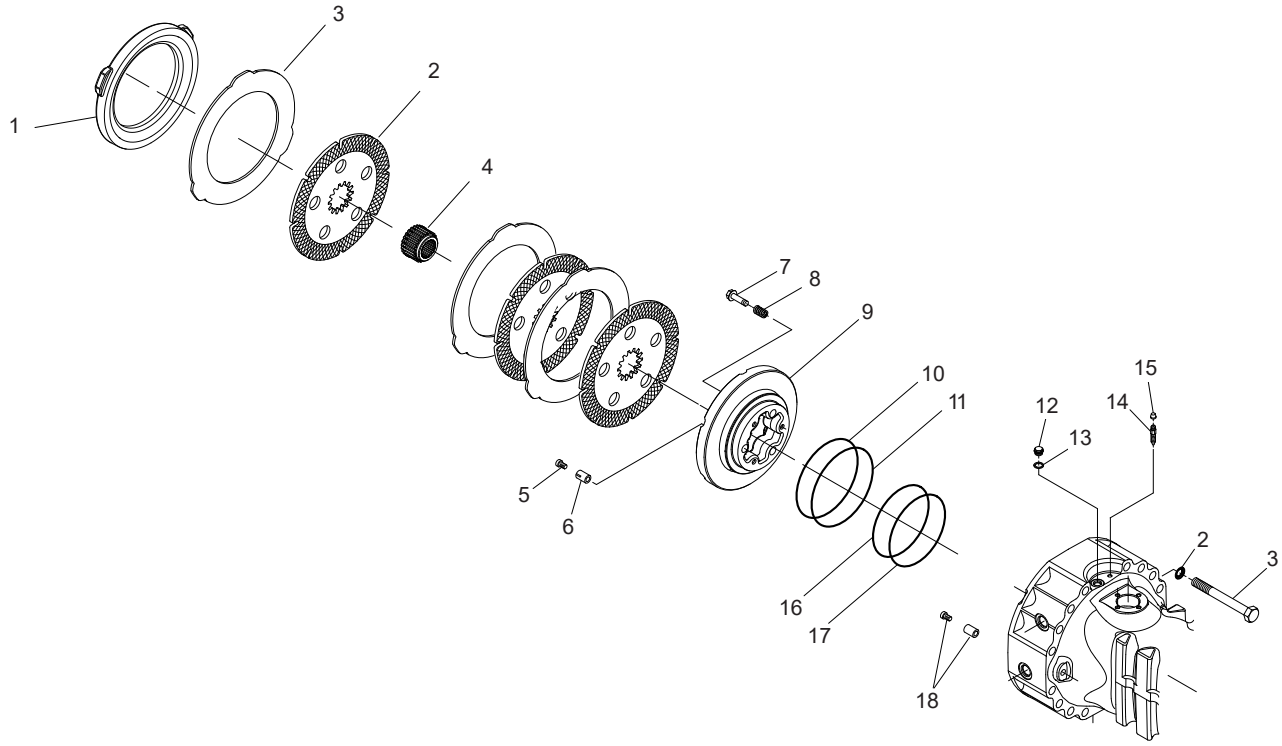

DISASSEMBLY

⚠DANGER

Before maintaining brakes, when the axle is installed on the vehicle, follow all safety instructions in the Original Equipment Manufacturer (OEM) manual that came with the vehicle.

⚠CAUTION

Before draining oil, release the internal pressure, for details see OIL DRAINING MANDATORY PROCEDURE p. 14.

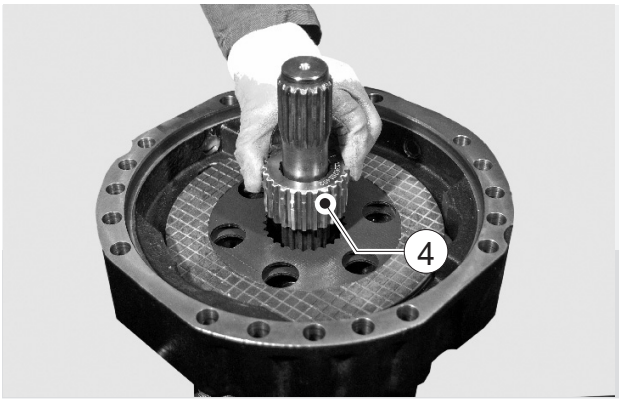

FIGURE 1: Remove the flange (4) complete with the discs. Write down direction of assembly.

FIGURE 2: Remove the axle shaft.

NOTE:

Be very careful not to damage the seal ring.

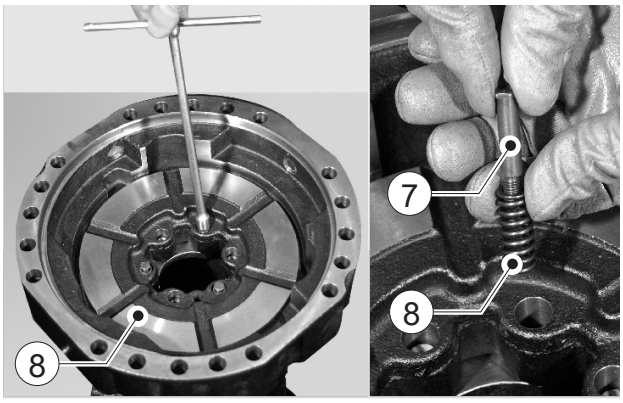

FIGURE 3: Remove the reversal springs (8) and screws (7).

NOTE:

If the springs (8) are weak or deformed they must be replaced.

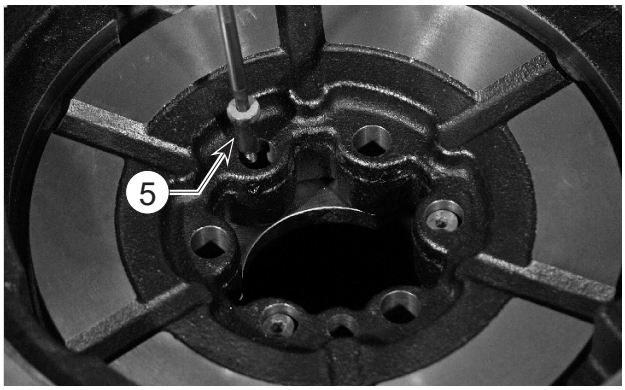

FIGURE 4: Remove the adjusting screws (5)

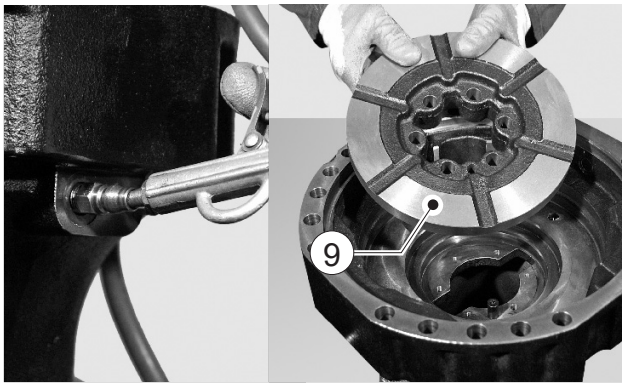

FIGURE 5: Slowly introduce low-pressure compressed air through the connection member for the service brake (P1), in order to extract the piston (9).

⚠CAUTION

Hold the piston (9) back, as it may be suddenly ejected and damaged.

ASSEMBLY

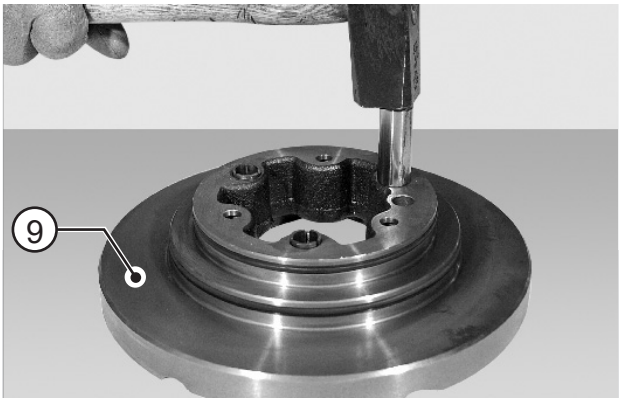

FIGURE 6: Insert the stroke automatic regulation springs (6); place them in line with the piston (9).

FIGURE 7: Fit o-ring (11, 16) and back-up ring (10, 17) onto the piston (11).
Lubricate the piston and the o-rings and install the unit into the arm.

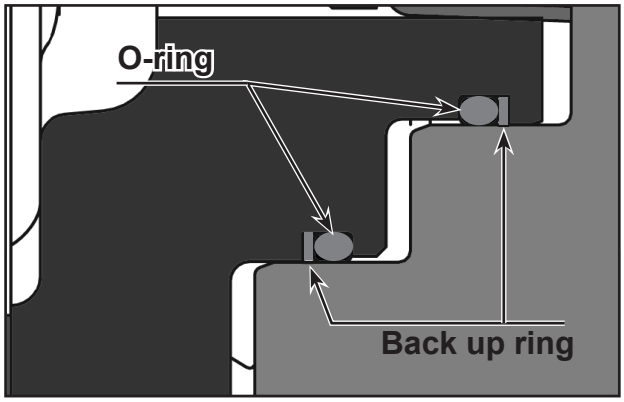

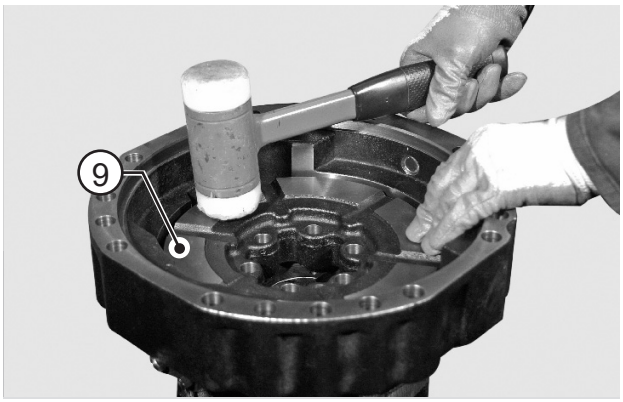

FIGURE 8: Using a plastic hammer, install the piston (9) into the arm.

NOTE:

Lightly hammer all around the edge in an alternate sequence.

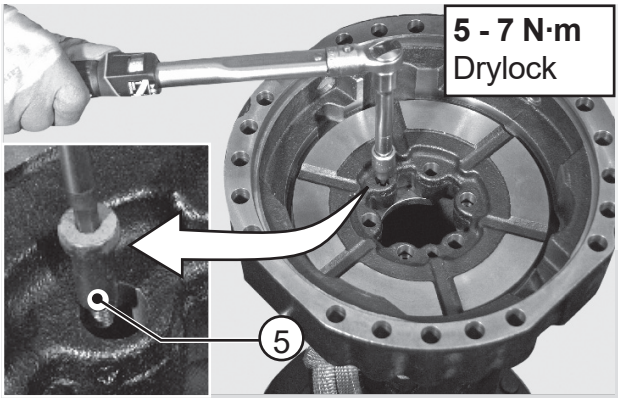

FIGURE 9: Fit the adjusting screws (5).
Torque wrench setting: 5 - 7 N·m

⚠CAUTION

Use only new screws pre-treated with Driloc locking adhesive. Threads must be cleaned from oil. Degrease only non pre-treated threads.

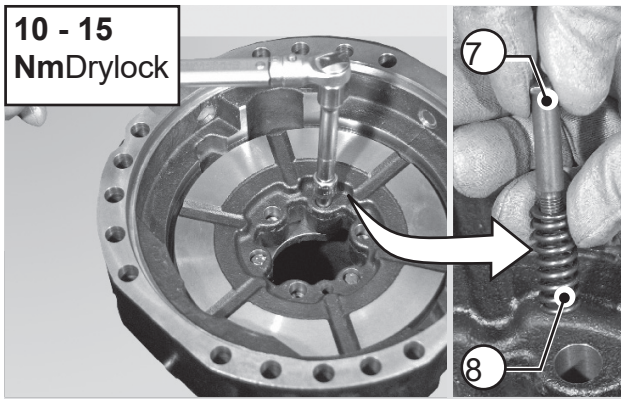

FIGURE 10: Fit the reversal springs (8) on the piston (9). Tighten with torque wrench setting of 10 - 15 N·m

⚠CAUTION

Use only new screws pre-treated with Driloc locking adhesive. Threads must be cleaned from oil. Degrease only non pre-treated threads.

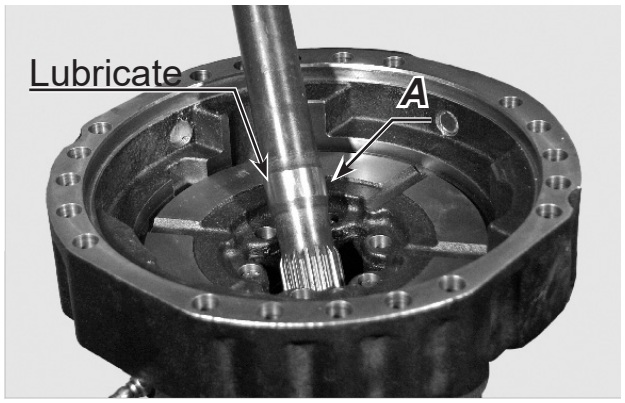

FIGURE 11: Grease sealing face “A” of axle-shaft .

NOTE:

Be very careful not to damage the snap ring.

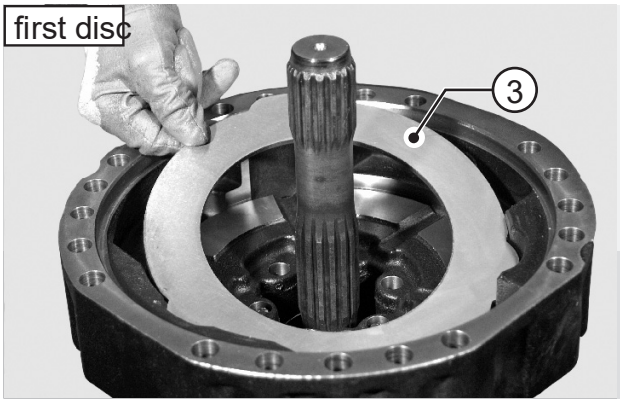

FIGURE 12: Insert the brake discs in the right sequence.

NOTE:

The first brake disc (3) to be inserted must be of steel material.

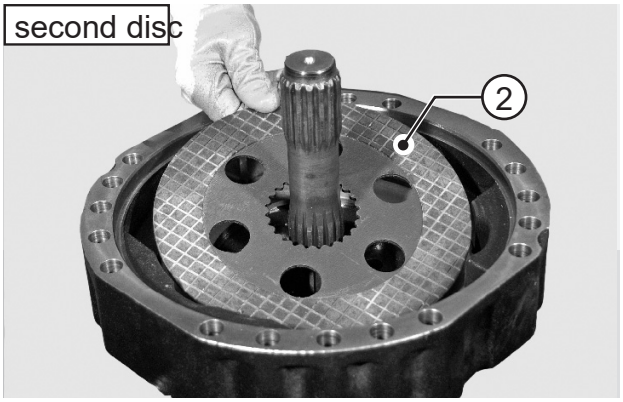

FIGURE 13: The second brake disc (2) to be inserted must be of friction material.

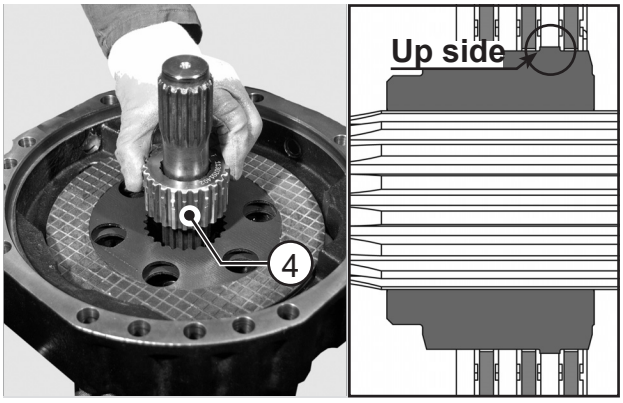

FIGURE 14: Install the flange (4) on the arm.

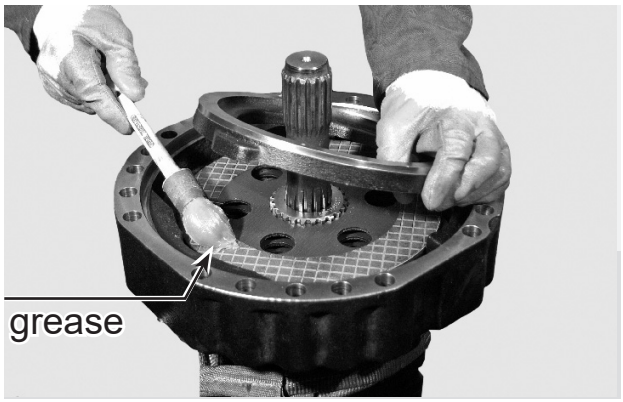

FIGURE 15: Insert the intermediate disk (1).
Before installing the last brake disc and the intermediate disc, spread grease over the contact surfaces to hold them in position while mounting on the central housing.

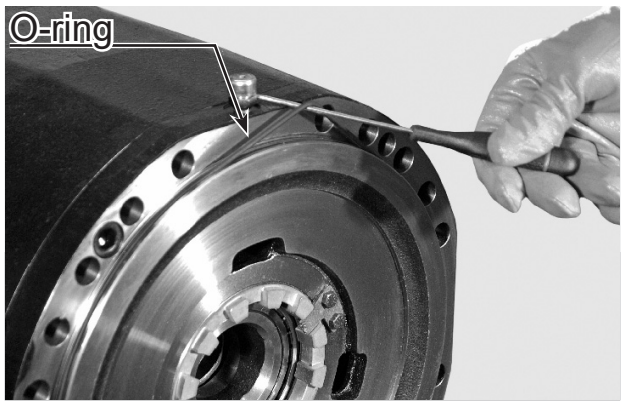

FIGURE 16: Check integrity and position of the cylinder's oring.

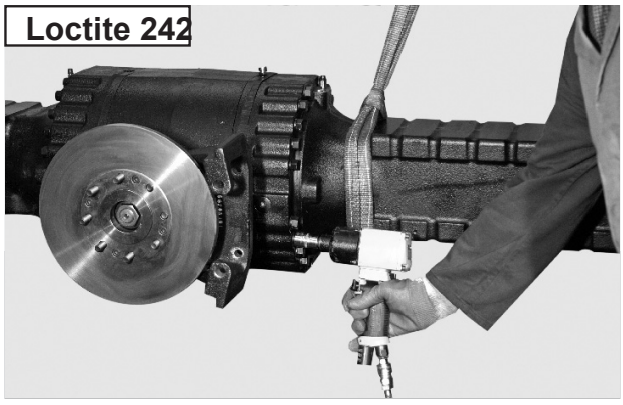

FIGURE 17: Temporarily lock the arm with nuts previously coated with Loctite 242; tighten lightly to make the unit touch the main body.

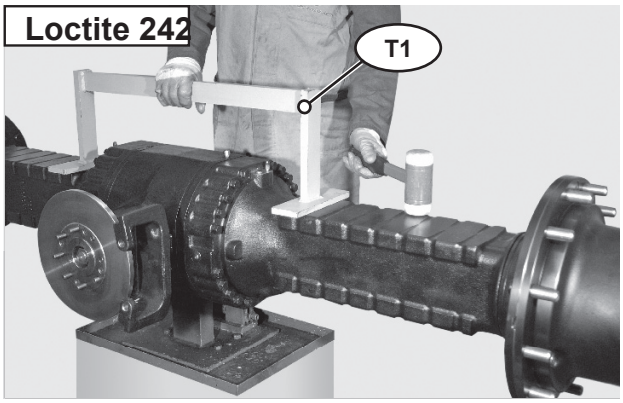

FIGURE 18: Check the flatness of the arms, using tool T1 (See drawing T1 p. 44); then lock the arms into their final position, using screws adequately coated with Loctite 242.

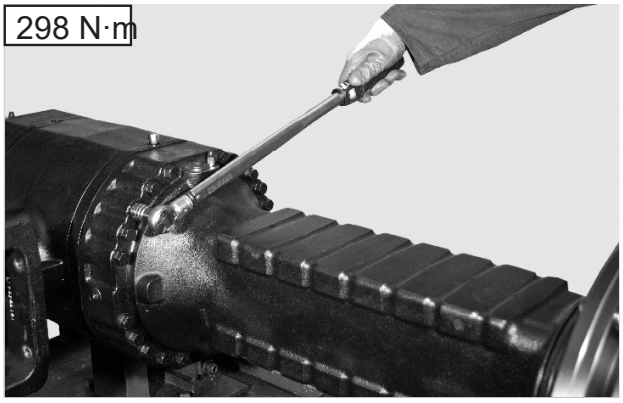

FIGURE 19: Secure in position with the screws (3) and washers (2), tightening to a torque of 298 N·m.

SPECIAL TOOLS

T1

P/N: 910.06.2363

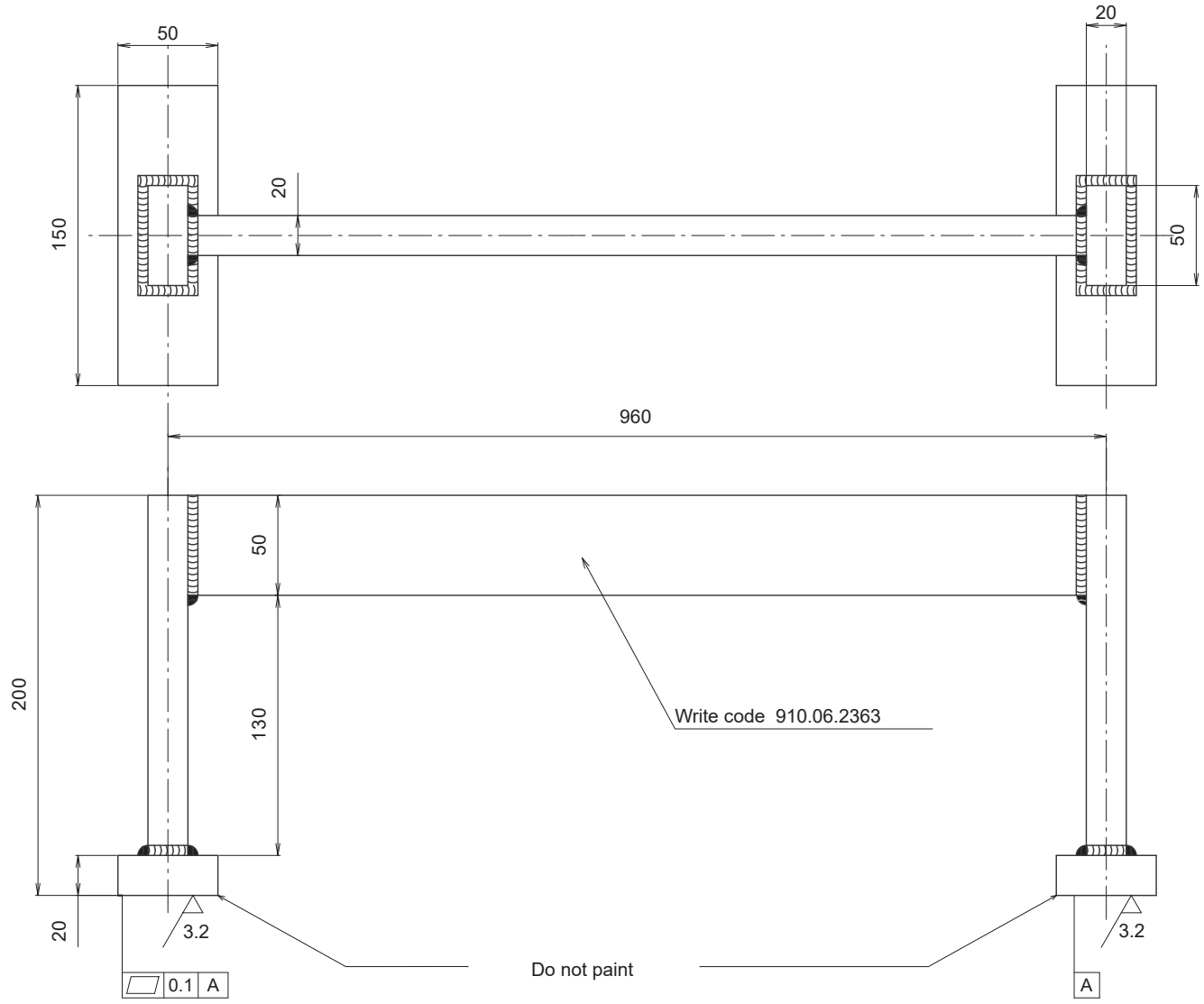

SERVICE BRAKE AND NEGATIVE PARKING BRAKE (NEW SELF ADJUSTING)

EXPLODED VIEW

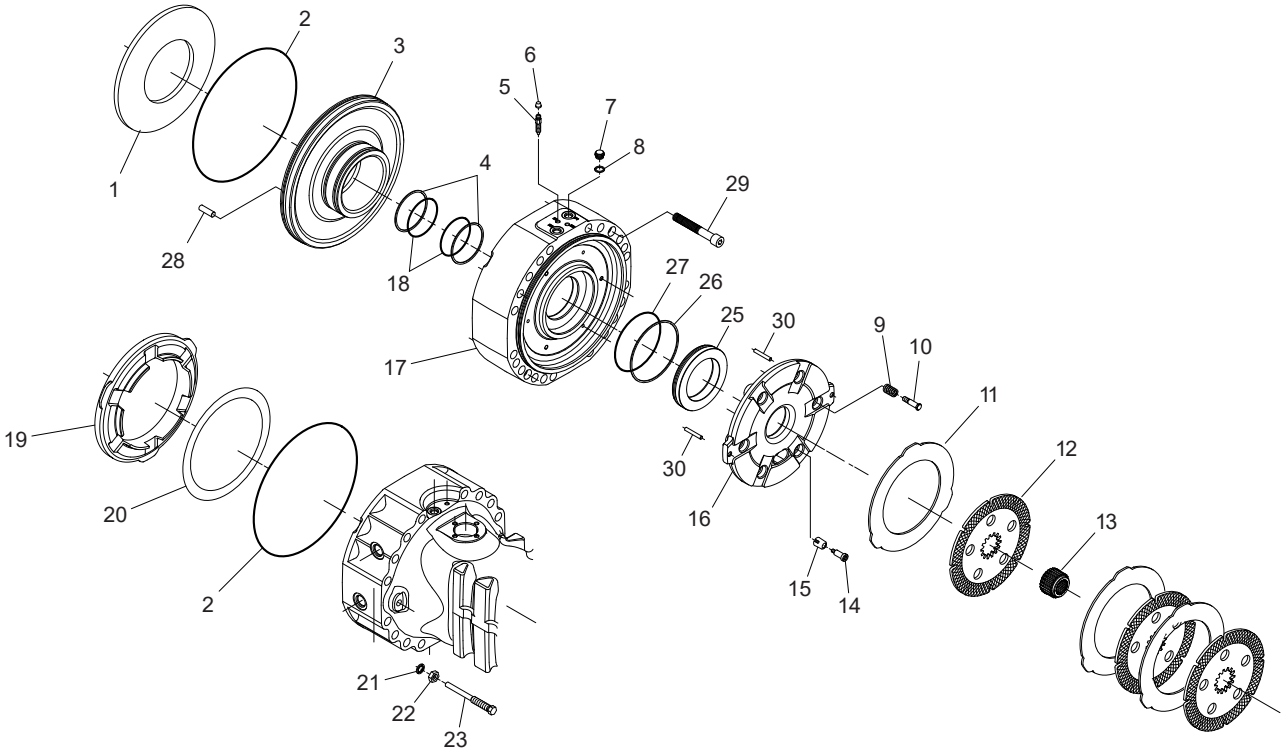

RELEASE

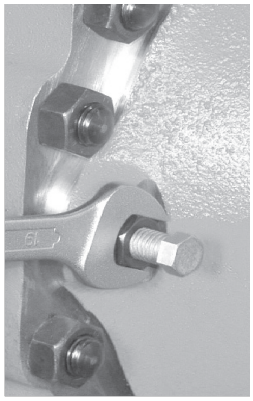

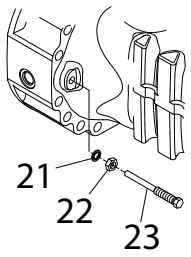

FIGURE 1: Loosen nuts (22) of screws (23) provided for the mechanical and manual release of the braking units, then move the nuts backwards.

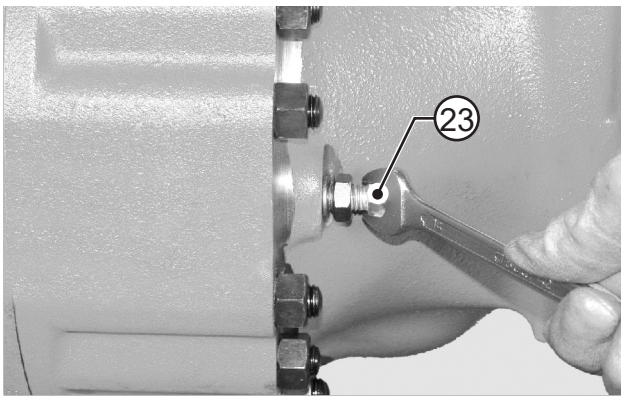

FIGURE 2: Screw in release bolts (23) until contact is made with the pusher plate (16). Once contact is made, the torque to rotate the screws will increase.

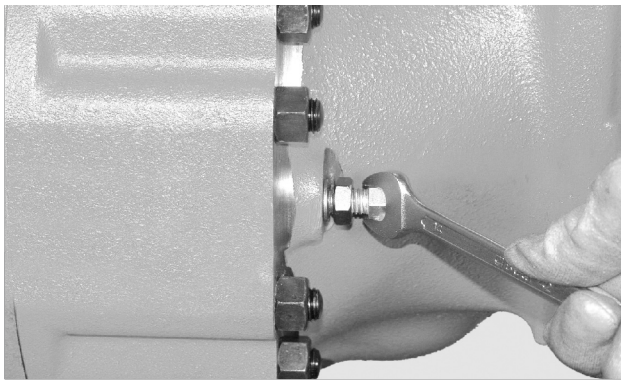

FIGURE 3: From this position, gradually tighten the bolts ¼ turn alternating between each side.

⚠CAUTION

ADJUSTMENT

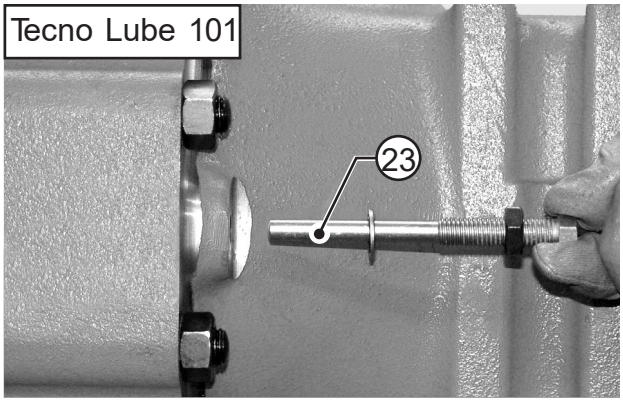

FIGURE 4: Remove screws complete with nuts and seals. Replace seals, apply silicone-based Tecno Lube /101 grease to the screws, and install all parts into the arm.

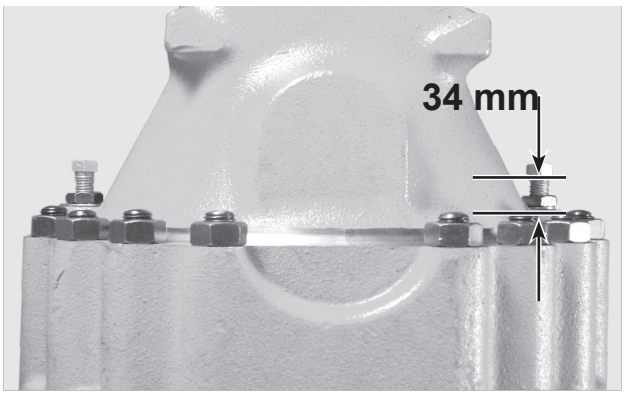

FIGURE 5: Adjust screws (23) to obtain a distance of 34 mm in relation to the arm.

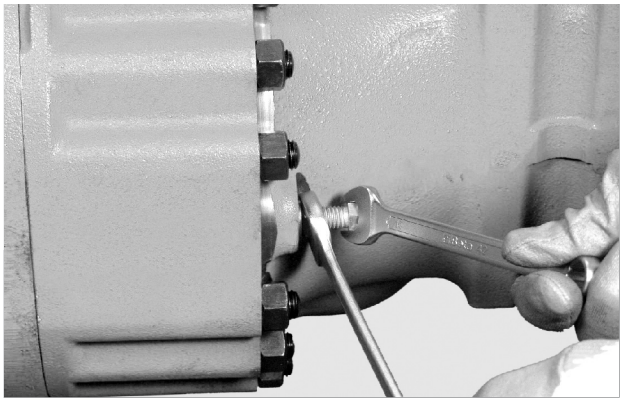

FIGURE 6: Lock into position with nuts (22).

⚠CAUTION

Hold screws (23) into position while locking the nuts (22); after locking, check the distance of screws (23) once more.

DISASSEMBLY

⚠DANGER

Before maintaining brakes, when the axle is installed on the vehicle, follow all safety instructions in the Original Equipment Manufacturer (OEM) manual that came with the vehicle.

⚠CAUTION

Before draining oil, release the internal pressure, for details see OIL DRAINING MANDATORY PROCEDURE p. 14.

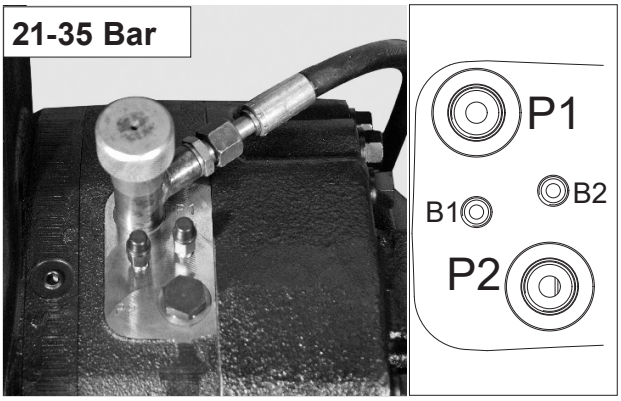

FIGURE 7: Connect an external pump to the union piece “P1“ of the negative brake and introduce a pressure of 21 - 35 bar to eliminate the pressure of the Belleville washers (1).

⚠DANGER

Always check that the hydraulic circuit test for leaks under pressure. Always use a cardboard or a panel to control the loss.

A leak from a hole of the size of a pin can cause serious injury. If fluid is injected into the skin it is necessary to seek immediate medical care.

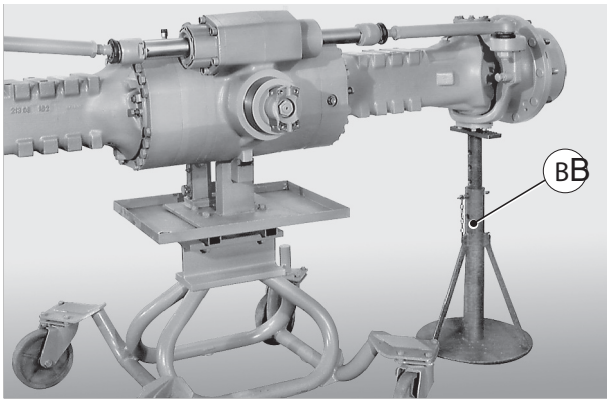

FIGURE 8: If axle is positioned on an overhaul bench, place a safety anti-tilting stand “B” under the arm that remains connected and block wheels, if any.

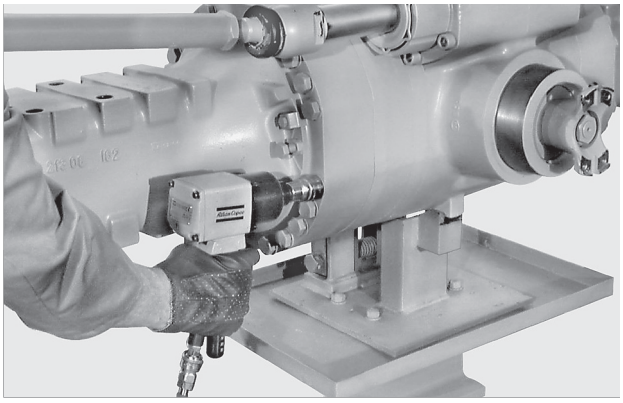

FIGURE 9: Sling the arm to be removed and connect it to a hoist. Remove the retainer screws and washers.

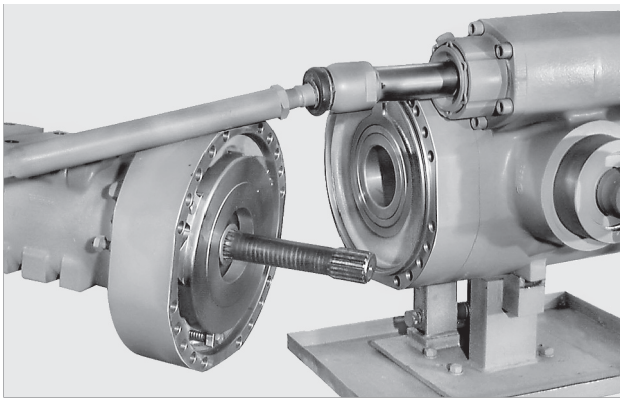

FIGURE 10: Remove arm together with brakes and axle shafts; lay down the arm vertically.

FIGURE 11: Gradually release the pressure in the braking circuit, bringing it to zero through the external pump.

⚠ DANGER

Do not remove any part of the hydraulic circuit without having completely released the hydraulic pressure.

The removal of pressurized parts or loss caused from releasing these components can cause serious injuries and even death. A leak from a hole of the size of a pin can cause serious injury. If fluid is injected into the skin it is necessary to seek immediate medical care.

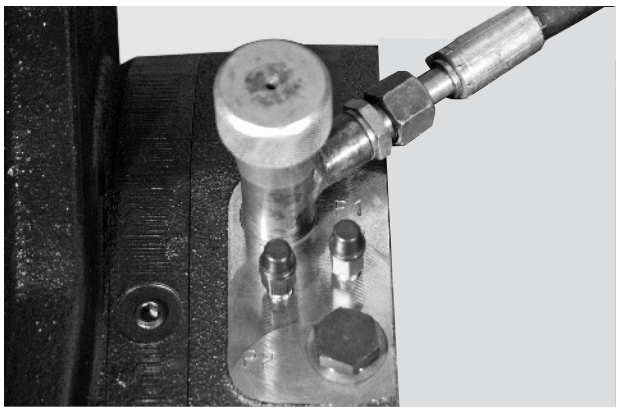

FIGURE 12: Gradually loosen the sleeve and remove.

⚠ DANGER

Carefully check that the hydraulic pressure is discharged completely before removing the external pump sleeve connected to the brake.

FIGURE 13: Remove braking discs (11, 12), noting down direction of assembly.

NOTE:

If disks are not being replaced, avoid changing their position.

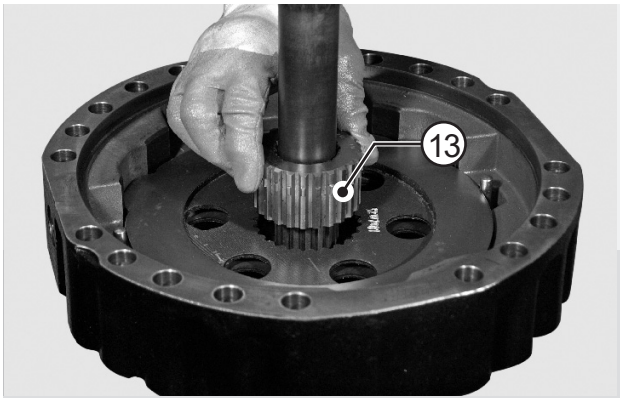

FIGURE 14: Remove the flange (13) complete with the discs, noting the direction of assembly.

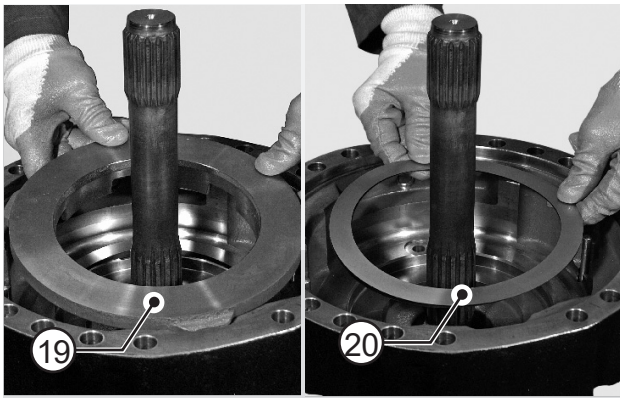

FIGURE 15: Remove spacer-braking discs (19) and shims (20) noting direction of assembly.

NOTE:

Build a stack of washers and check the measure.

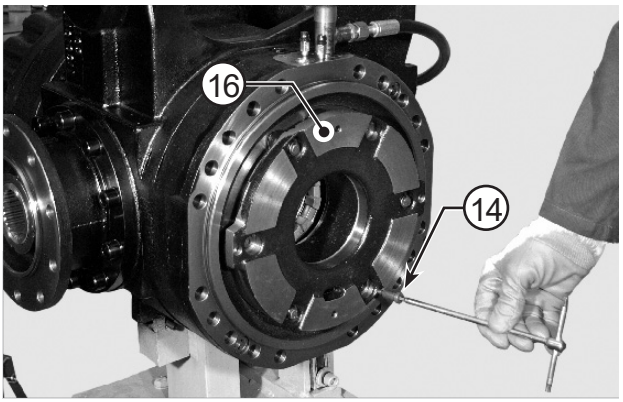

FIGURE 16: Remove the adjusting screws (14) from the counterwasher (16).

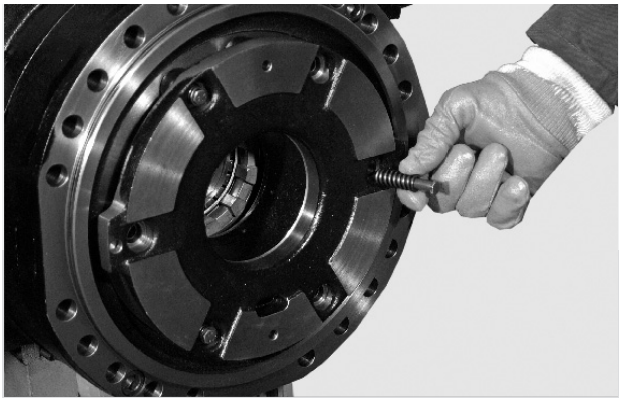

FIGURE 17: Remove the reversal springs (9) and screws

NOTE:

If the springs (9) are weak or deformed they must be replaced.

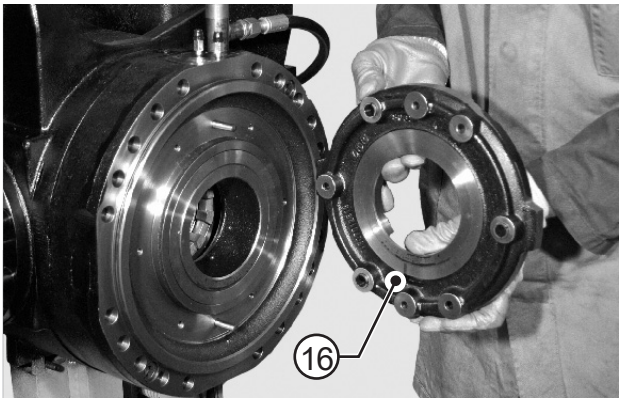

FIGURE 18: Write down the order of assembly and remove the counterwasher (16).

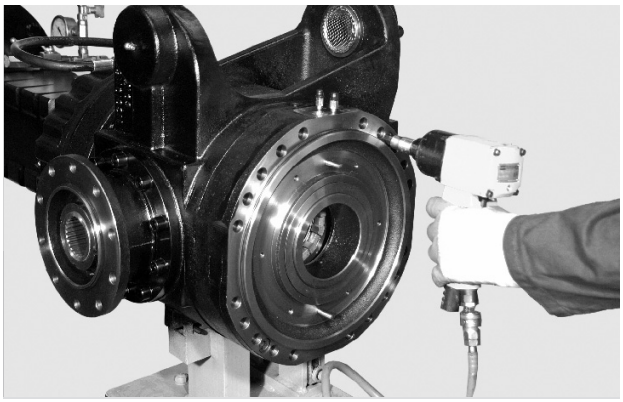

FIGURE 19: Loosen the screws (29) in an alternate manner and remove them.

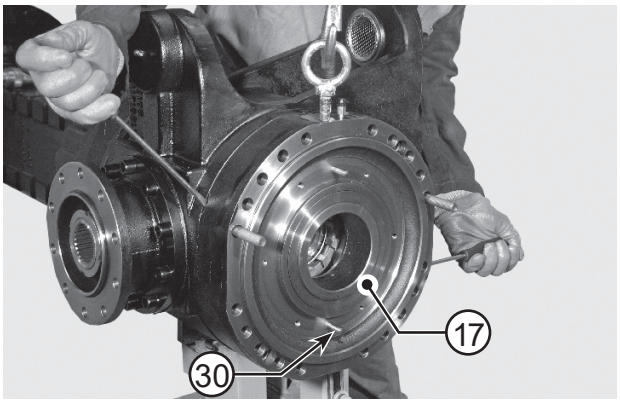

FIGURE 20: Remove the brake cylinder (17) and dowels

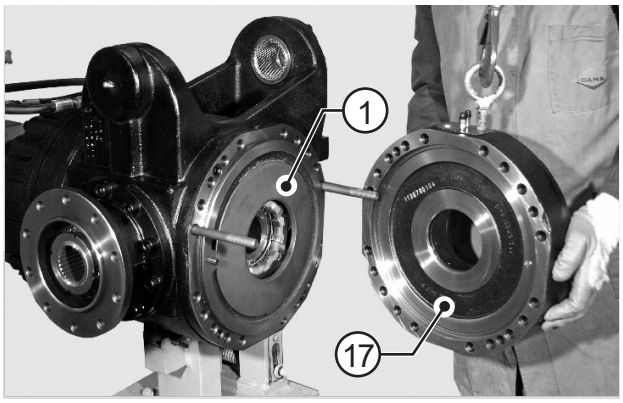

FIGURE 21: Move the cylinder (17) outwards while supporting the Belleville washers (1).
Remove the Belleville washers (1) and write down the direction of assembly.

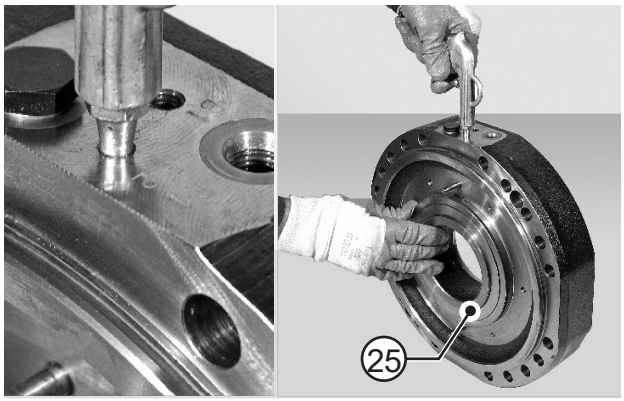

FIGURE 22: Slowly introduce low-pressure compressed air through the connection member for the service brake (P2), in order to extract the piston (25).

⚠CAUTION

Hold the piston (25) back, as it may be suddenly ejected and damaged.

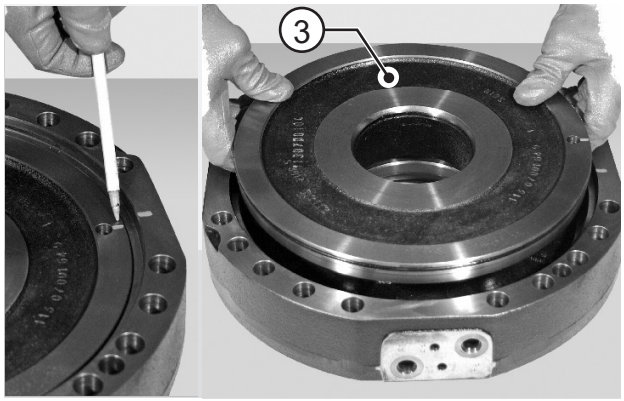

FIGURE 23: Slowly introduce low-pressure compressed air through the connection member for the negative brake (P1), in order to extract the piston (3).

⚠CAUTION

Hold the piston (3) back, as it may be suddenly ejected and damaged. Write down the order of assembly.

ASSEMBLY

FIGURE 24: Fit antitwist rings (2, 4) onto the piston (3).

⚠WARNING

Antitwist ring replaces o-ring + backup ring solution.
For details, see PSB-0395.

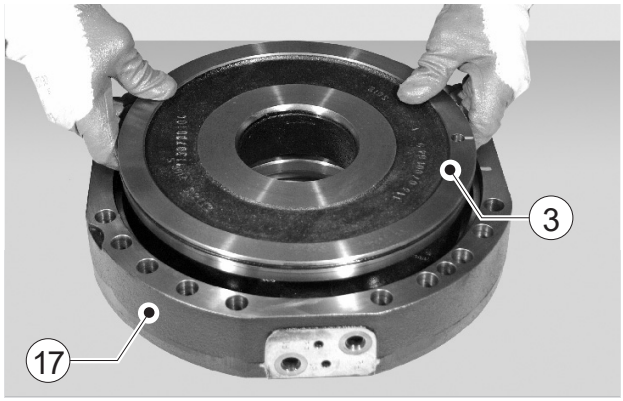

FIGURE 25: Check the position of the antitwist rings (2, 4). Lubricate the piston and the antitwist rings and install the unit (3) into the cylinder (17) .

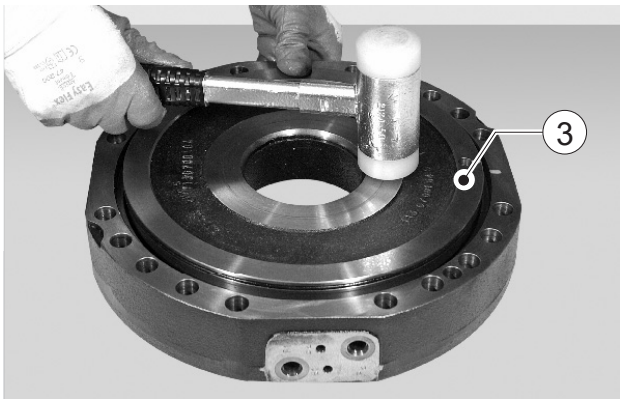

FIGURE 26: Using a plastic hammer, install the piston (3) into the cylinder (17).

NOTE:

Lightly hammer all around the edge in an alternate sequence.

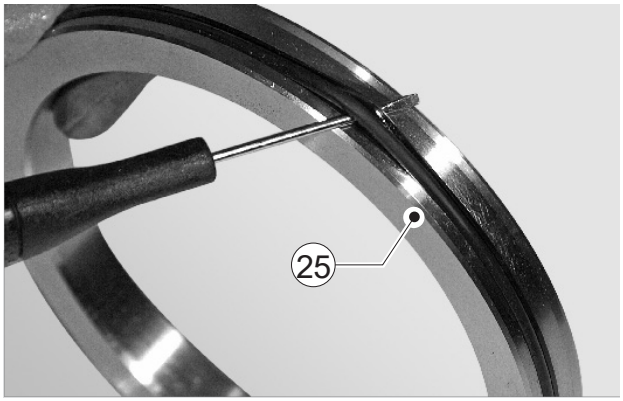

FIGURE 27: Fit antitwist ring (27) onto the piston (25).

⚠WARNING

Antitwist ring replaces o-ring + backup ring solution.
For details, see PSB-0395.

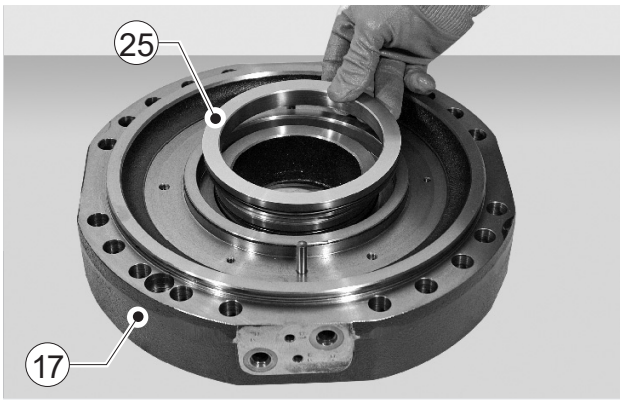

FIGURE 28: Lubricate the piston and the antitwist rings and install the unit (25) into the cylinder (17) .

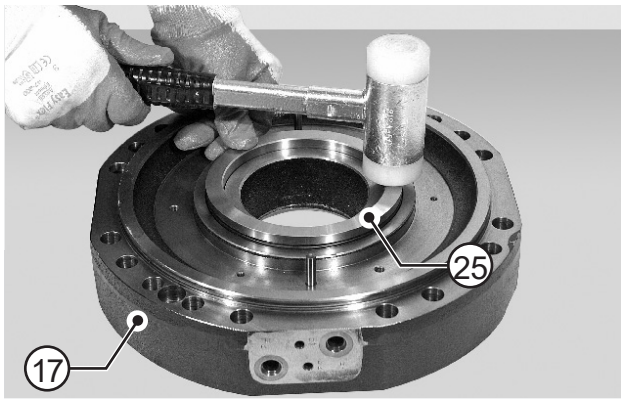

FIGURE 29: Using a plastic hammer, install the piston (25) into the cylinder (17).

NOTE:

Lightly hammer all around the edge inan alternate sequence.

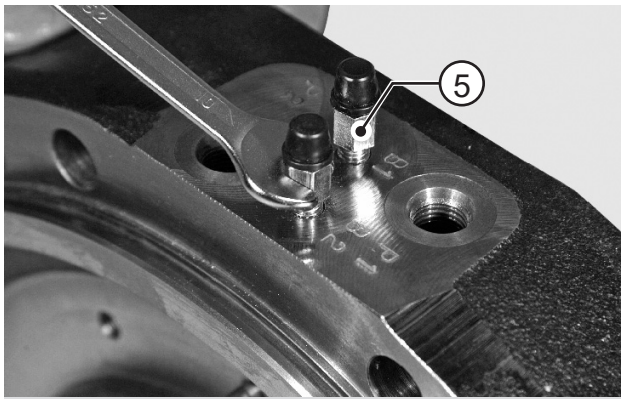

FIGURE 30: Assemble the breather (5).

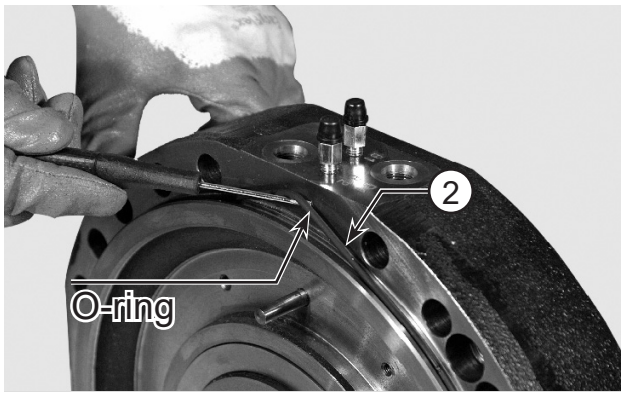

FIGURE 31: Check condition and position of the cylinder's oring (2).

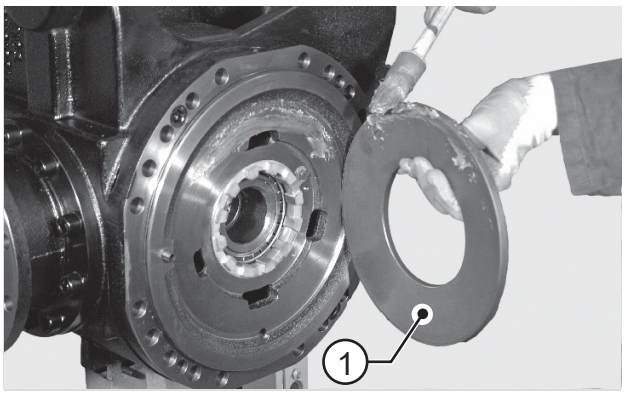

FIGURE 32: Position the Belleville washers (1) and engage the cylinder, spread grease over the contact surfaces to hold them in position while mounting on the central housing.

NOTE:

Check the sense of direction of Belleville washers (1) and relative centering.

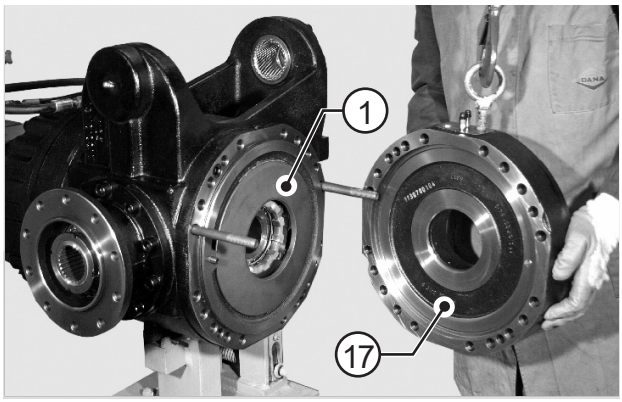

FIGURE 33: Install the cylinder (17).

NOTE:

Check the sense of direction of washers (1) and relative centering.

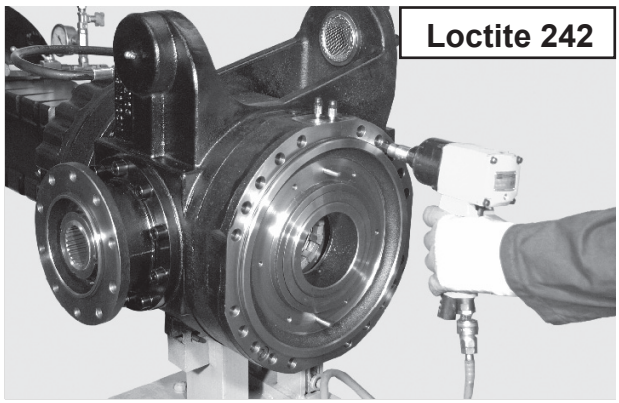

FIGURE 34: Insert the screws (29) and tighten them alternately. Lock the cylinder (17).

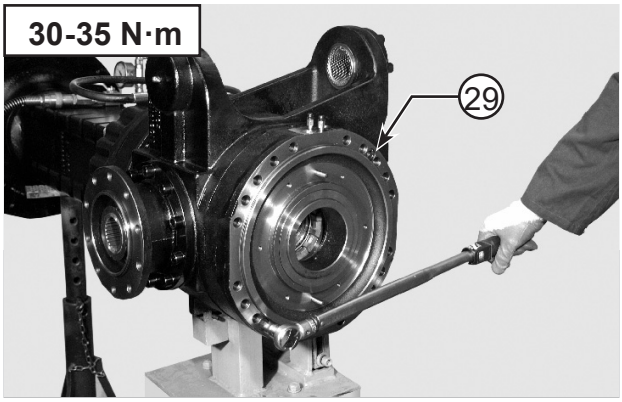

FIGURE 35: Tightening the screws (29) with a torque wrench set to 30 - 35 N·m.

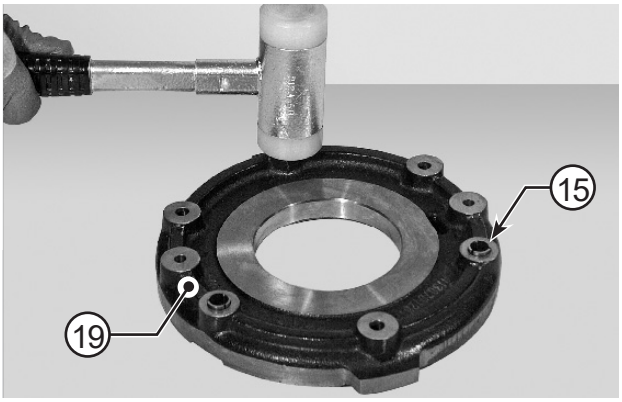

FIGURE 36: Insert the stroke automatic regulation springs (15); place them in line with the intermediate disc (19).

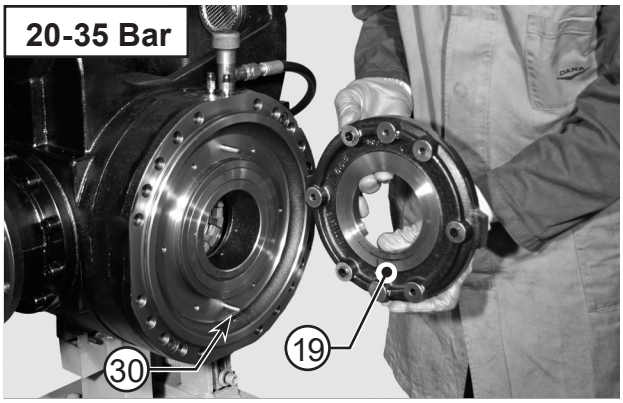

FIGURE 37: Insert the intermediate disc (19) on dowels (30). Connect an external pump to the negative brake and introduce pressure to 20 - 35 bar.

⚠DANGER

Always check that the hydraulic circuit test for leaks under pressure. Always use a cardboard or a panel to control the loss.

A leak from a hole of the size of a pin can cause serious injury. If fluid is injected into the skin it is necessary to seek immediate medical care.

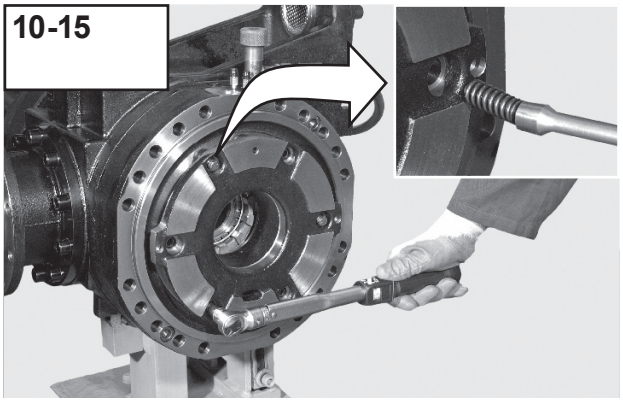

FIGURE 38: Install the reversal springs (9) and screws (10) on the intermediate disk (16).
Tighten to a torque wrench setting of 10 - 15 N·m

⚠CAUTION

Use only new screws pre-treated with Driloc locking adhesive. Threads must be cleaned from oil. Degrease only non pre-treated threads.

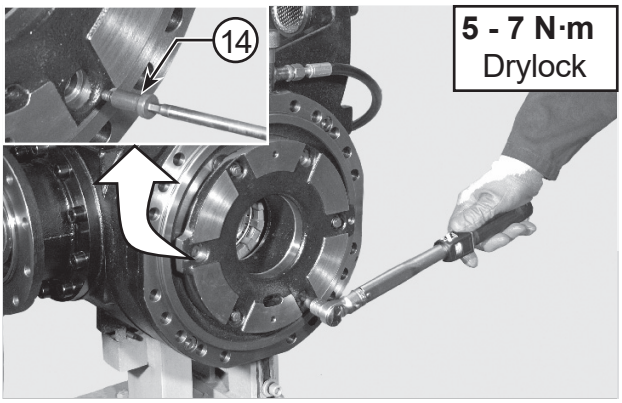

FIGURE 39: Install the adjusting screws (14). Tighten to 5 - 7 N·m.

⚠CAUTION

Use only new screws pre-treated with Driloc locking adhesive. Threads must be cleaned from oil. Degrease only non pre-treated threads.

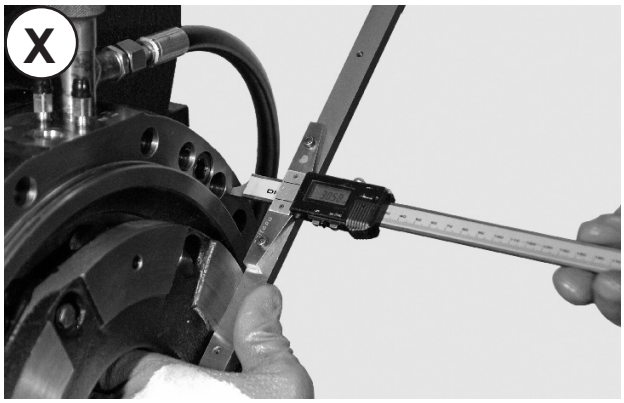

FIGURE 40: Take the measurement from the surface of the intermediate disk to the cover sealing surface with 20 - 35 bar of pressure introduced.
EXAMPLE: 30,6 mm

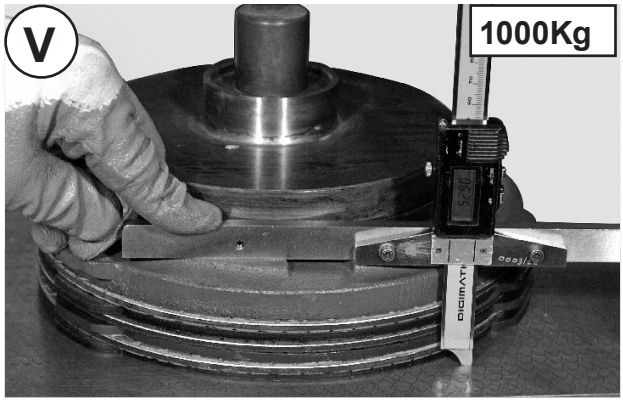

FIGURE 41: Put the brake disc pack including the shim under a press. Load with 1000 kg and take the measure “V”.
EXAMPLE: V = 52,9 mm

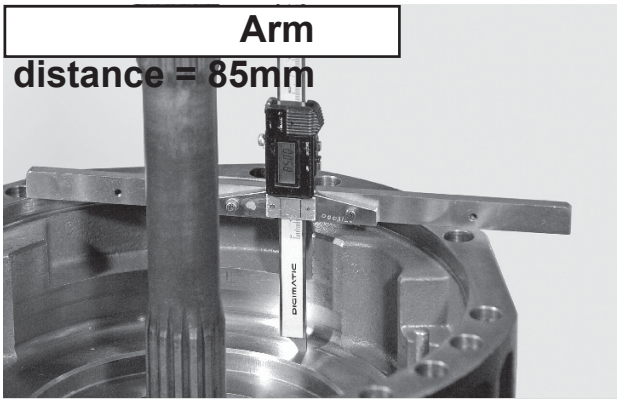

FIGURE 42: Arm distance = 85 mm

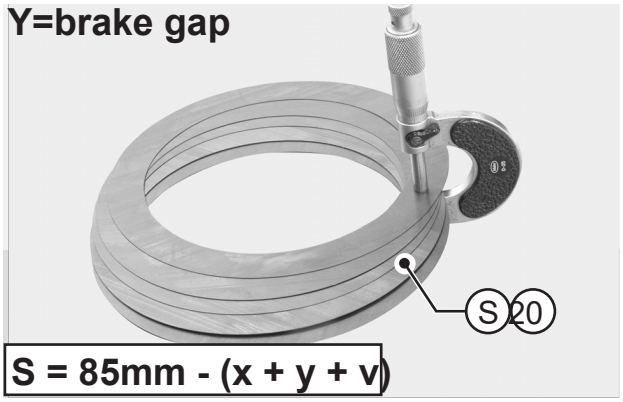

FIGURE 43: S = 85 mm - (x + y + v) = Thickness of shims to insert under the shim washer. EXAMPLE: 85 mm - (30,6 + 52,9 + 1) = S = 0,5 mm

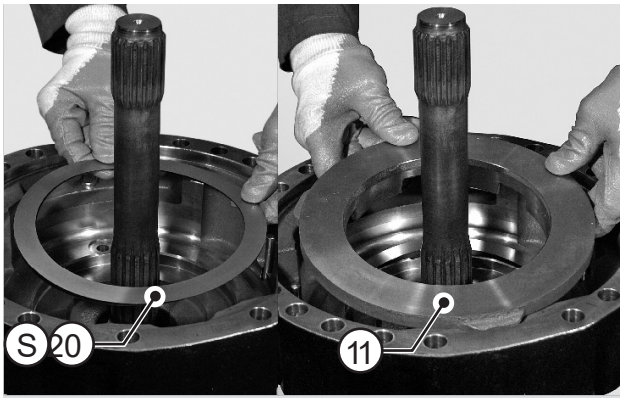

FIGURE 44: Insert under the shim washer a thickness of shims (20).

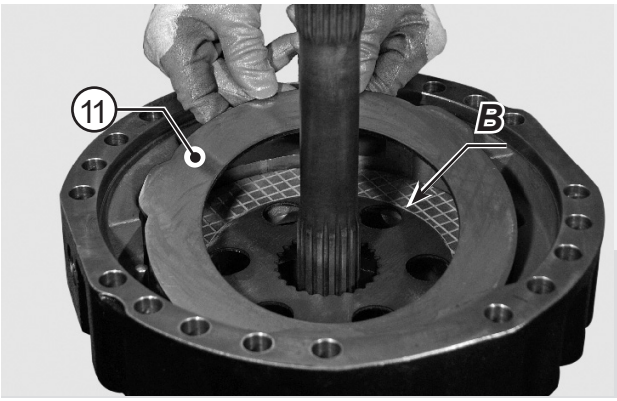

FIGURE 45: Slightly lubricate the braking disks (11, 12) and fit them in the arm following the correct sequence. Orient so that the oil circulation holes and the marks “B” are perfectly lined up.

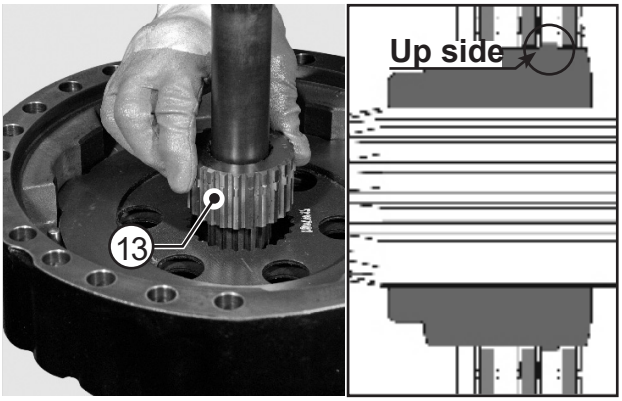

FIGURE 46: Install the flange (13) on the arm.

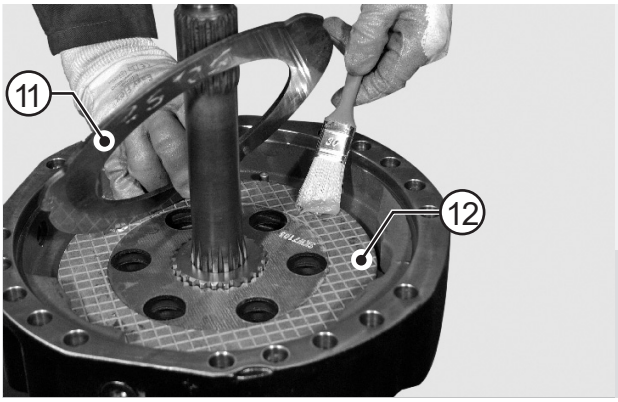

FIGURE 47: Insert the brake discs (11, 12) in the right sequence.

NOTE:

The last brake disc to be inserted must be steel material.

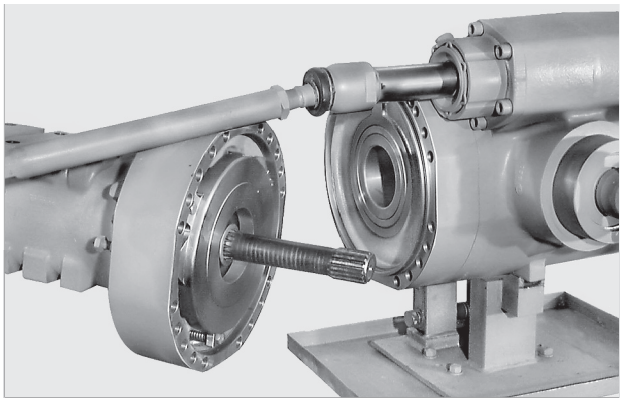

FIGURE 48: Check condition and position of the arm's o-ring. Install the complete arm.

NOTE:

To assist axle shaft centering, slightly move the wheel hub.

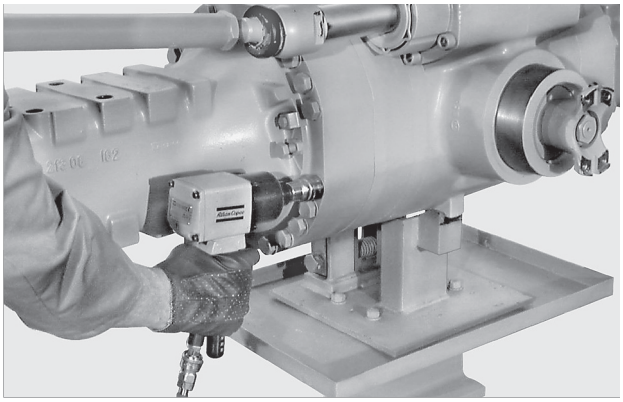

FIGURE 49: Temporarily lock the arm with nuts previously coated with Loctite 242; tighten lightly to make the unit touch the main body.

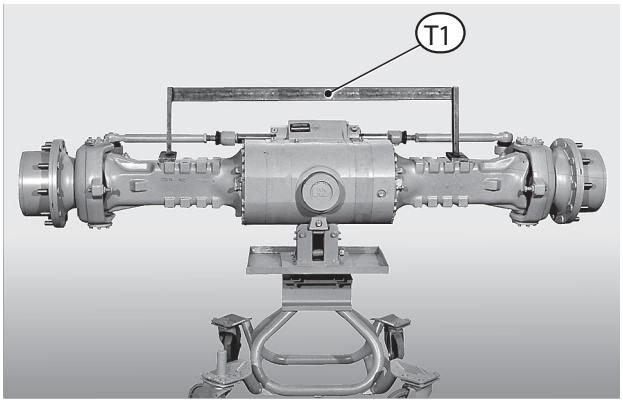

FIGURE 50: Check that the arms are level, using tool T1 (See drawing T1 p. 57); then lock the arms into their final position, using screws adequately coated with Loctite 242.

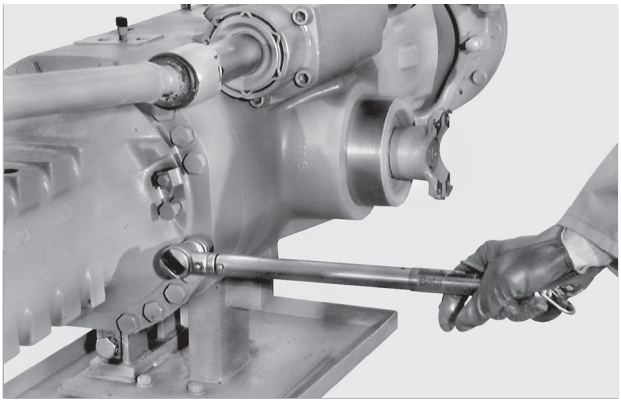

FIGURE 51: Secure in position with the screws and washers, by tightening to a torque of 298 N·m.

FIGURE 52: Gradually release the pressure in the braking circuit, bringing it to zero through the external pump.

⚠ DANGER

Do not remove any part of the hydraulic circuit without having completely released the hydraulic pressure.

The removal of pressurized parts or loss caused from releasing these components can cause serious injuries and even death. A leak from a hole of the size of a pin can cause serious injury. If fluid is injected into the skin it is necessary to seek immediate medical care.

FIGURE 53: Gradually loosen the sleeve and remove.

⚠ DANGER

Carefully check that the hydraulic pressure is discharged completely before removing the external pump sleeve connected to the brake.

SPECIAL TOOLS

T1

P/N: 910.06.2363

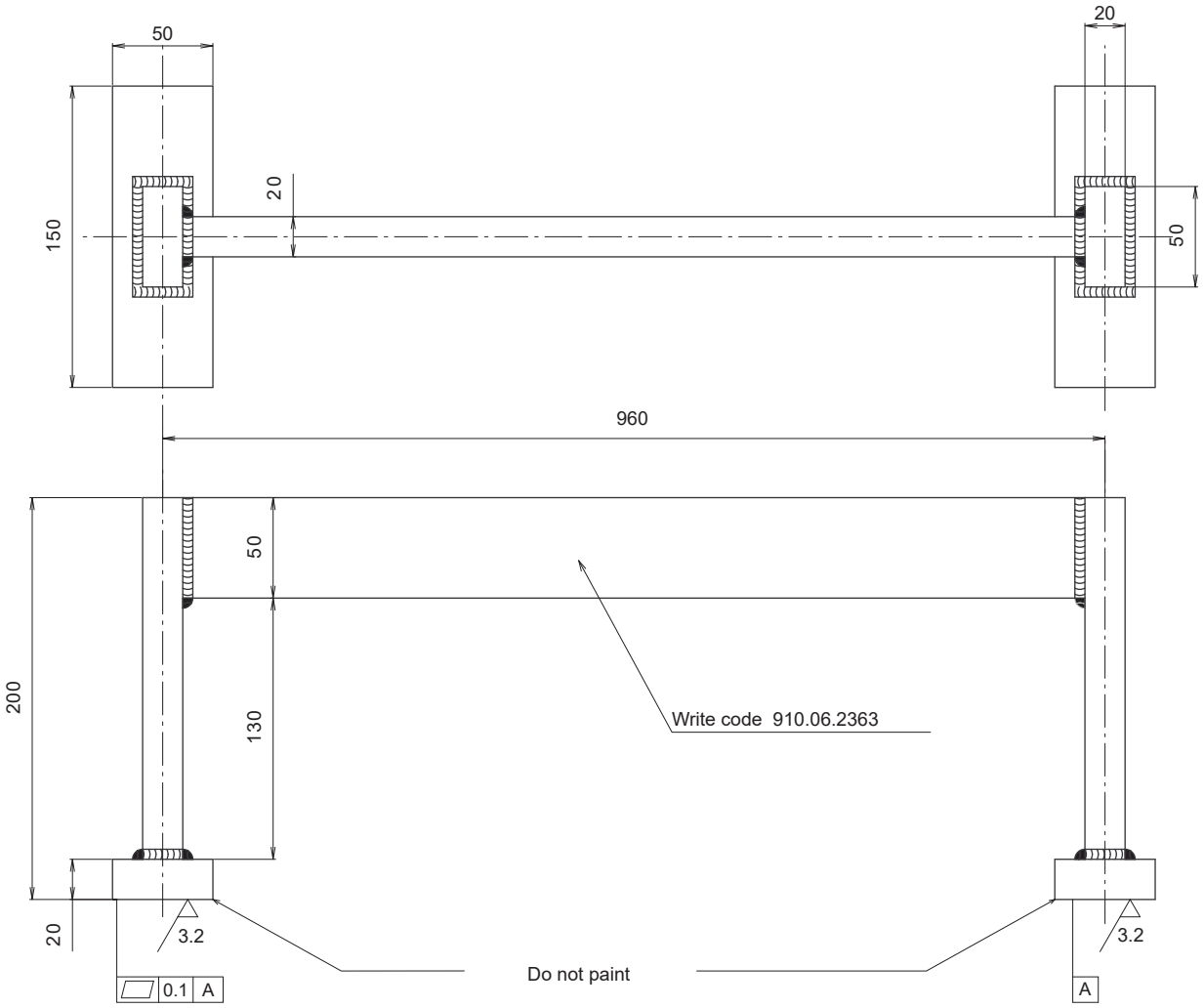

DOUBLE U-JOINT

EXPLODED VIEW

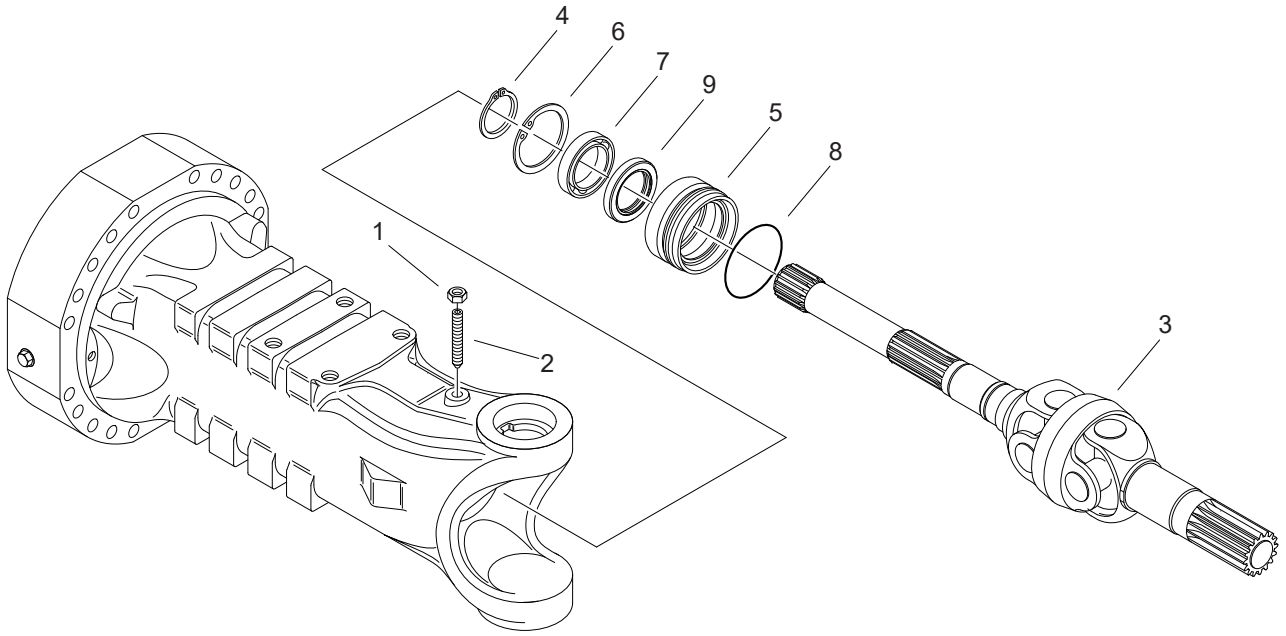

DISASSEMBLY

⚠CAUTION

Before draining oil, release the internal pressure, for details see OIL DRAINING MANDATORY PROCEDURE p. 14.

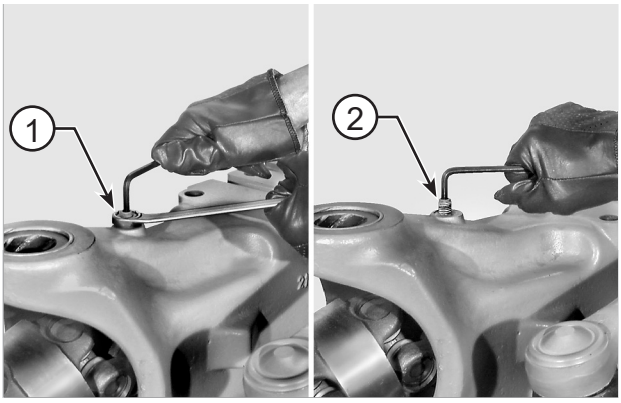

FIGURE 1: Loosen and remove the check nut (1) of the stud (2). Remove stud (2).

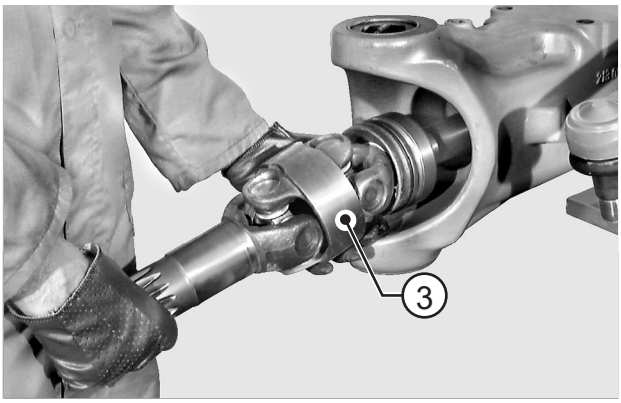

FIGURE 2: Extract the whole twin u-joint (3).

NOTE:

If necessary, use a plastic hammer or lever to ease extraction of the twin u-joint.

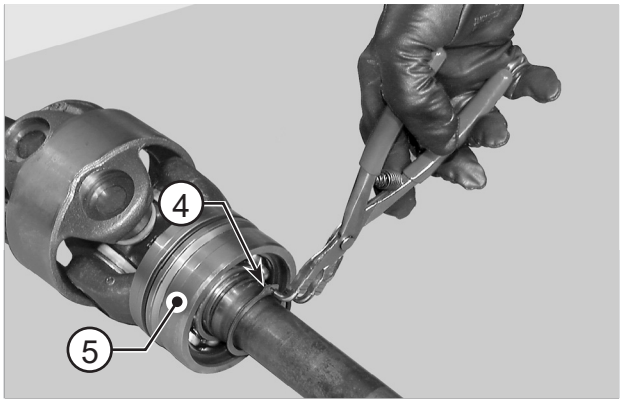

FIGURE 3: Remove the bushing (5) snap ring (4).

⚠CAUTION

MANDATORY PROCEDURE

Set the pliers following the correct procedure shown in END-STOP PLIER SETTING p. 15.

⚠WARNING

Removal of the snap rings can cause personal injuries. You must wear appropriate safety equipment. To avoid injury to eyes, wear eye protection equipment.

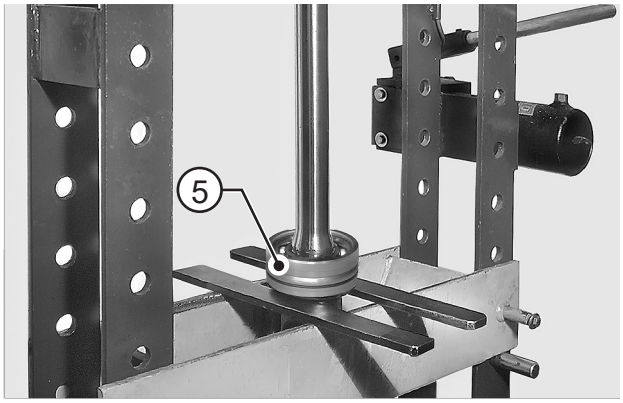

FIGURE 4: Place the u-joint under a press and remove the complete bushing (5).

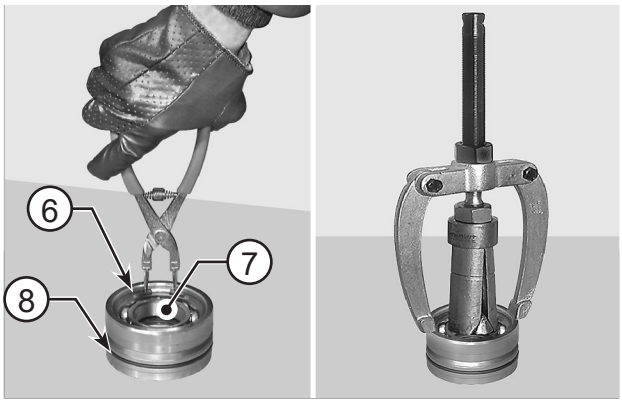

FIGURE 5: Remove the bearing (7) snap ring (6). Remove the o-ring (8) and, using a puller for inner parts, remove the bearing (7) and seal ring (9).

⚠CAUTION

MANDATORY PROCEDURE

Set the pliers following the correct procedure shown in END-STOP PLIER SETTING p. 15.

⚠WARNING

Removal of the snap rings can cause personal injuries. You must wear appropriate safety equipment. To avoid injury to eyes, wear eye protection equipment.

NOTE:

Write down direction of installation of seal ring.

ASSEMBLY

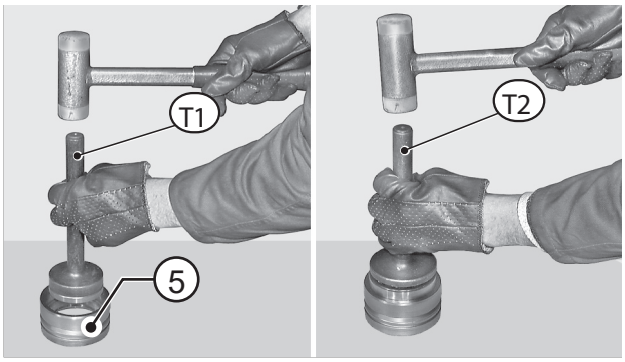

FIGURE 6: Using tools T1 (See drawing T1 p. 64) and T2 (See drawing T2 p. 64), introduce the seal ring (9) and bearing (7) into the bushing (5).

NOTE:

Check direction of installation of seal (9) carefully.

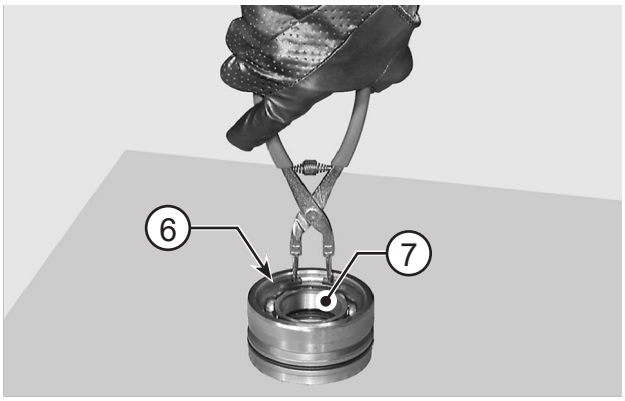

FIGURE 7: Install the bearing (7) snap ring (6).

CAUTION

MANDATORY PROCEDURE

Set the pliers following the correct procedure shown in END-STOP PLIER SETTING p. 15.

WARNING

Personal injury can result when installing snap ring. The appropriate safety equipment must be worn. To avoid injury to your eyes, wear protective glasses during this procedure.

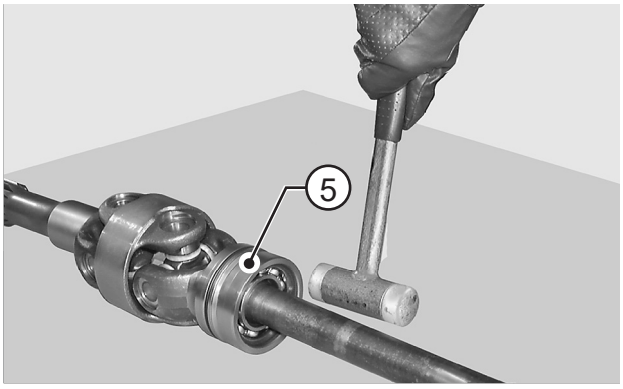

FIGURE 8: Install the complete bushing (5) onto the twin ujoint and set bushing into position with a plastic hammer.

CAUTION

Tap around the whole rim.

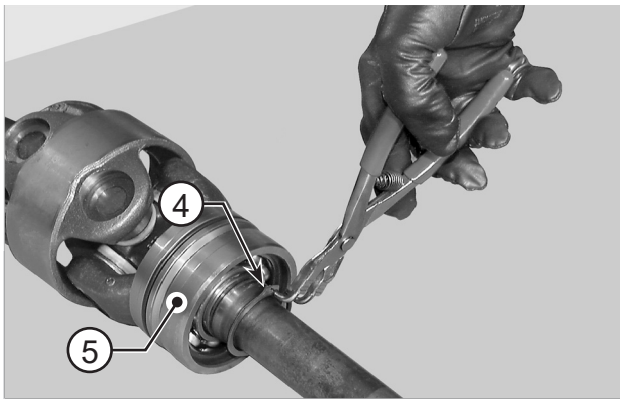

FIGURE 9: Install the bushing (5) snap ring (4) and position the o-ring (8) as well.

CAUTION

MANDATORY PROCEDURE

Set the pliers following the correct procedure shown in END-STOP PLIER SETTING p. 15.

WARNING

Personal injury can result when installing snap ring. The appropriate safety equipment must be worn. To avoid injury to your eyes, wear protective glasses during this procedure.

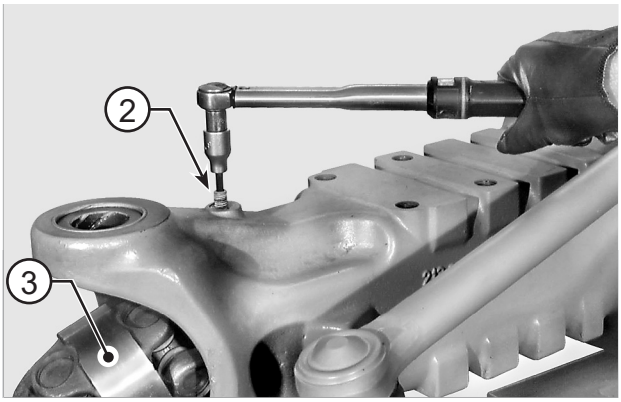

FIGURE 10: Introduce the twin u-joint (3) into the arm and lock into position with stud (2) coated with Loctite 242. Tighten stud to a maximum torque of 15 N·m.

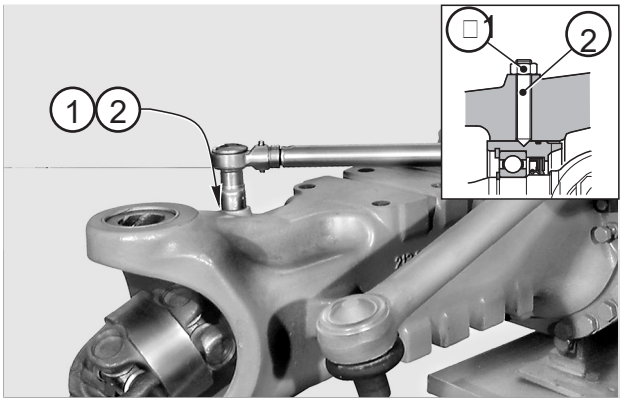

FIGURE 11: Apply Loctite 242 to the jutting portion of the stud (2) and tighten nut (1) to a torque of 60 - 70 N·m while holding stud (2) in position.

SPECIAL TOOLS

T1

P/N: 3342

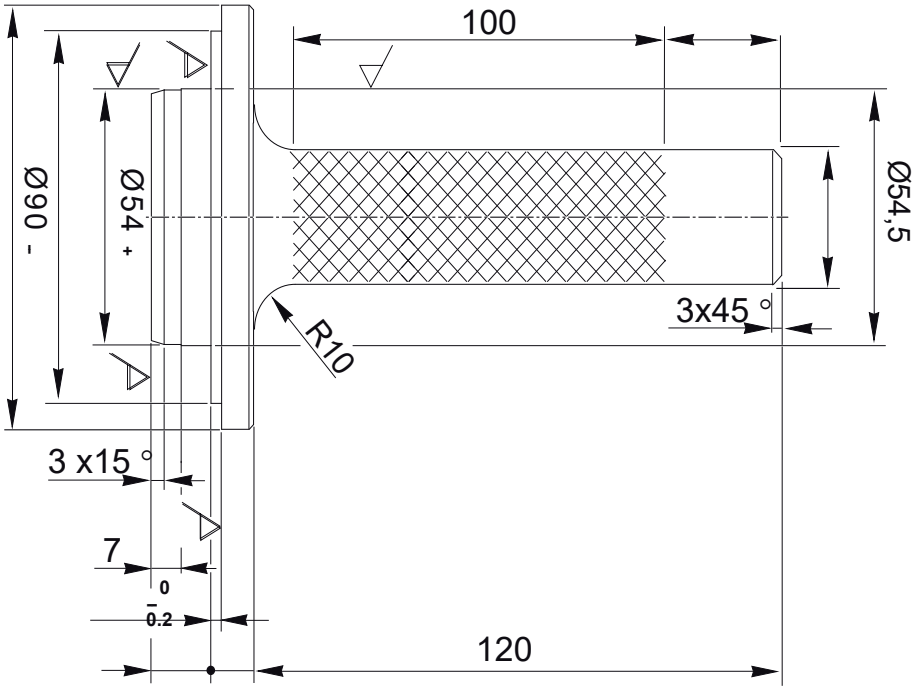

T2

P/N: 2301

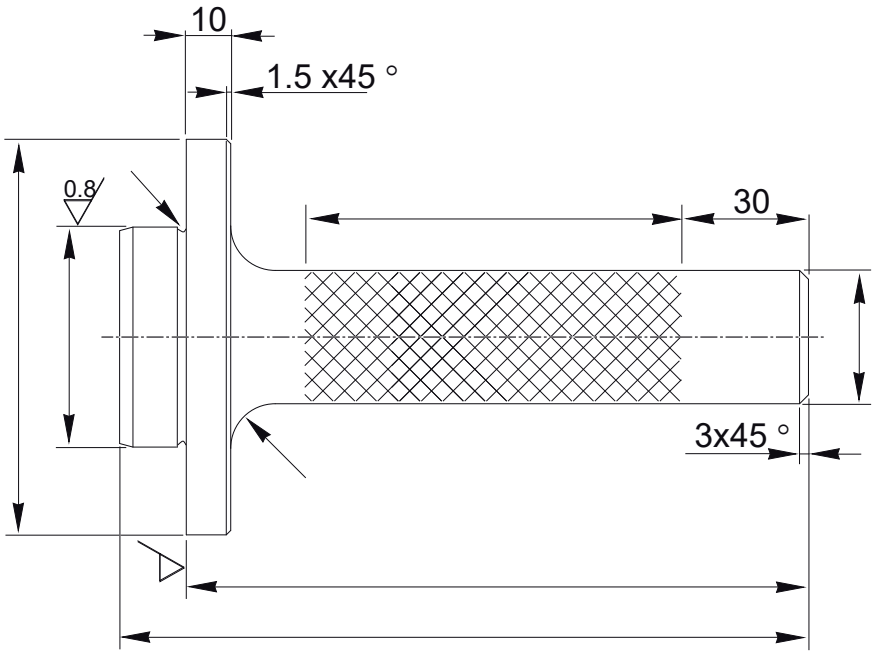

PLANETARY REDUCTION GEAR

EXPLODED VIEW

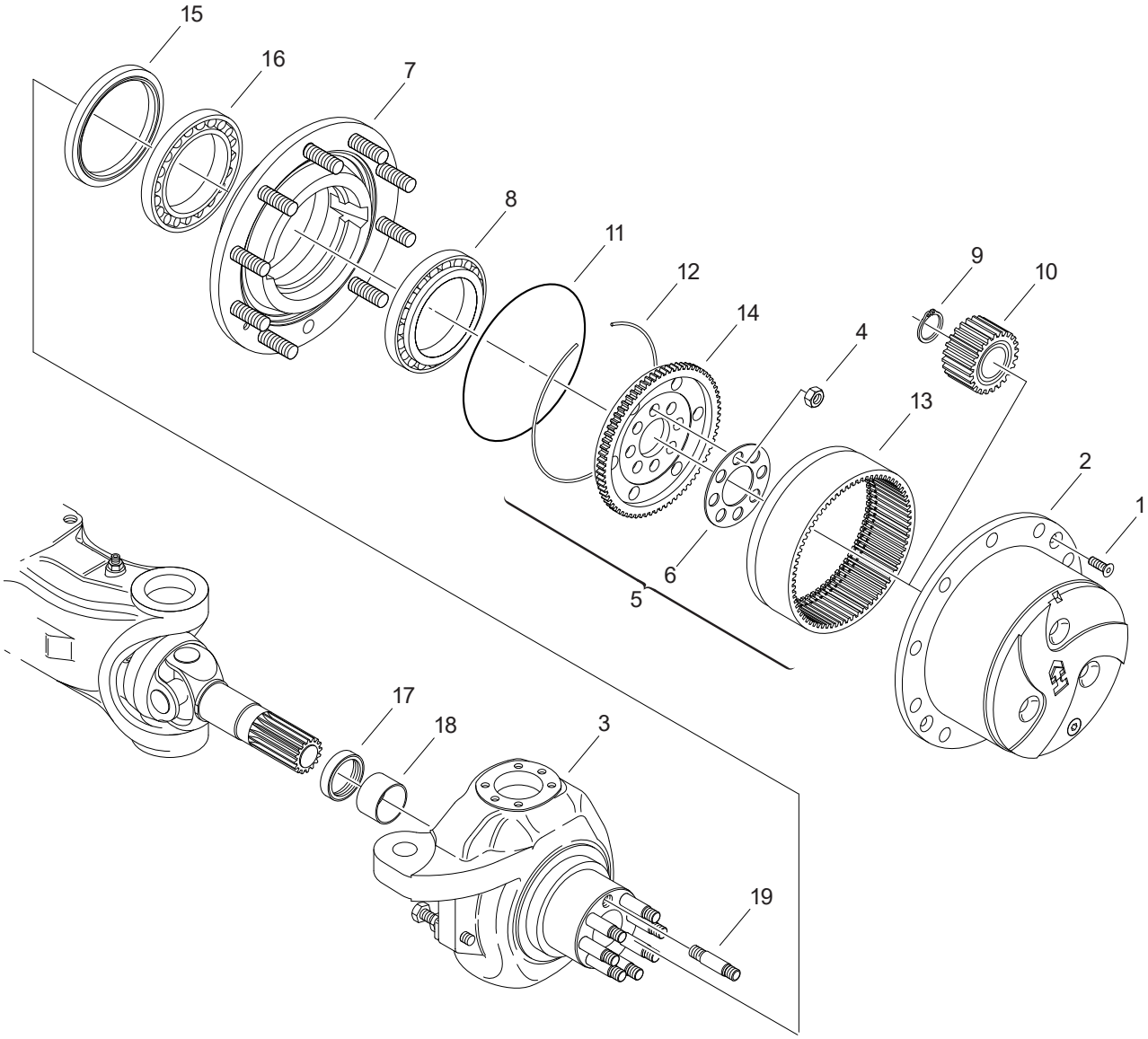

DISASSEMBLY

⚠CAUTION

Before draining oil, release the internal pressure, for details see OIL DRAINING MANDATORY PROCEDURE p. 14.

⚠CAUTION

Make sure all fluids are contained during inspection, maintenance, tests, adjustment and repair of the product. Prepare a suitable container to collect the fluid before removing any component containing fluids. Dispose of all fluids following legal and local regulations.

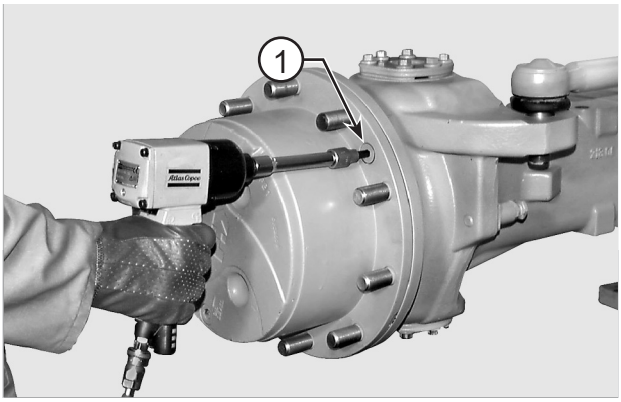

FIGURE 1: Remove screws (1) from planetary cover.

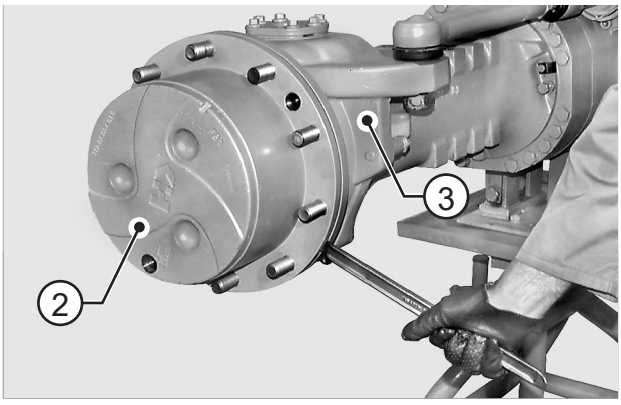

FIGURE 2: Alternately insert a lever in the slots provided and pry to separate the planetary cover (2) from the steering case (3).

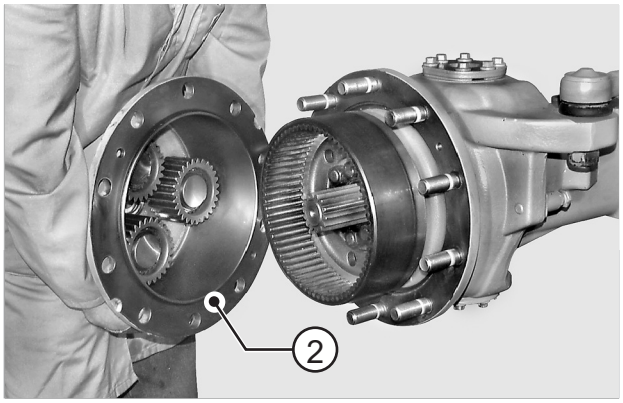

FIGURE 3: Remove the complete planetary cover (2).

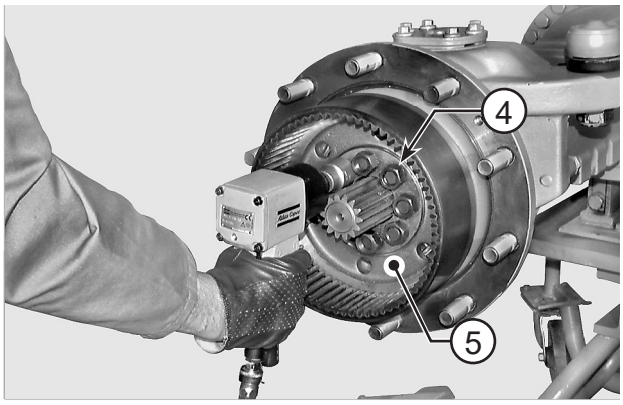

FIGURE 4: Loosen and remove the nuts (4) that lock the ring gear flange (5).

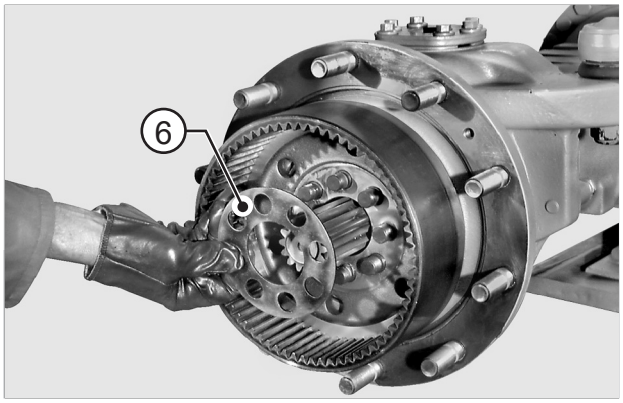

FIGURE 5: NOT PRESENT ON ALL MODELS
Remove safety flange (6).

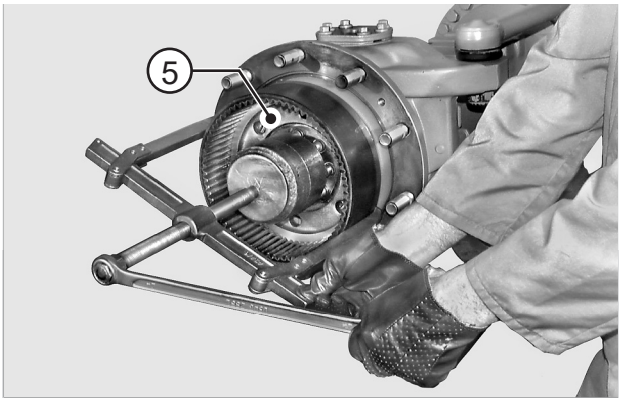

FIGURE 6: Remove the complete ring gear flange (5) by using a puller and applying counter pressure to the studs.

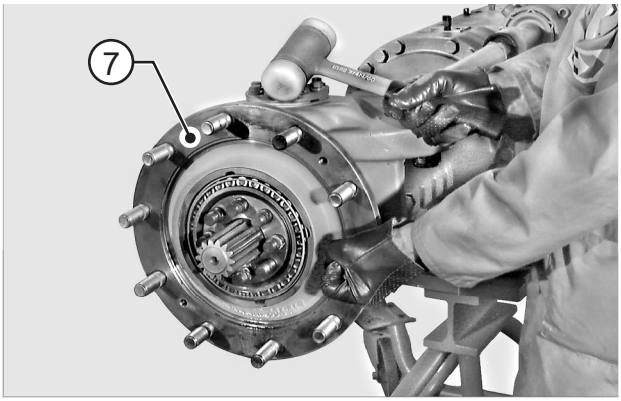

FIGURE 7: Partially draw out the wheel hub (7) by using a plastic hammer.

NOTE:

Hammer alternately on several equidistant points.

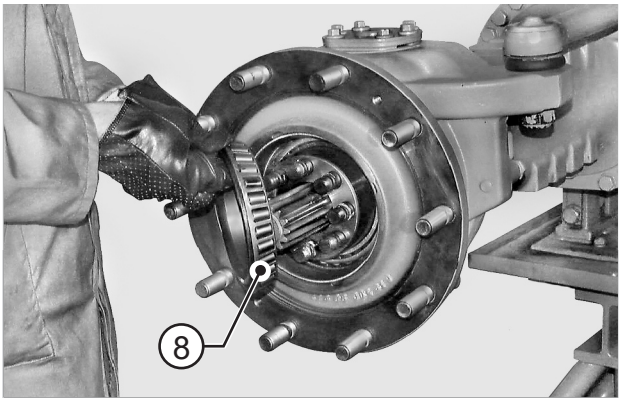

FIGURE 8: Remove the external bearing (8).

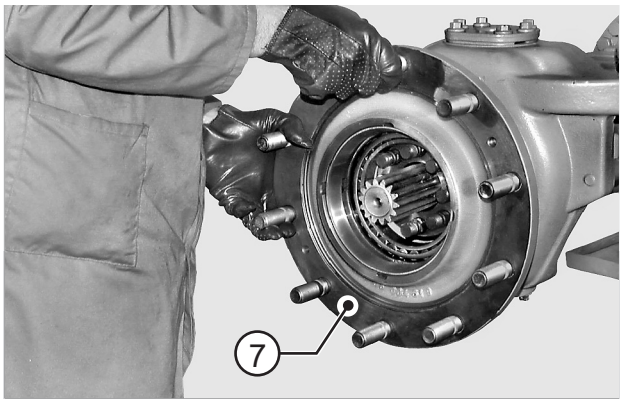

FIGURE 9: Draw out the wheel hub (7).

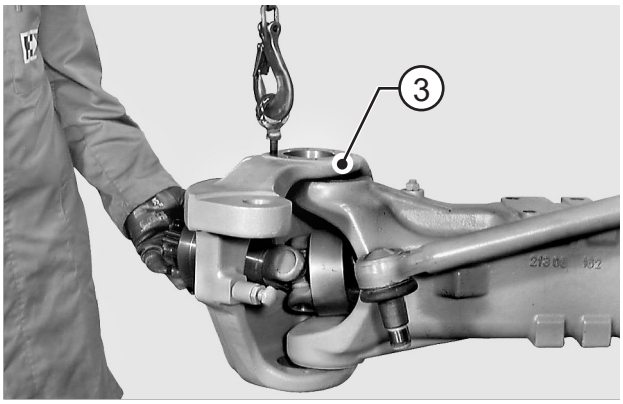

FIGURE 10: Remove the pins and steering case (3). For pin removal details, see COMPLETE STEERING CASE p. 33.

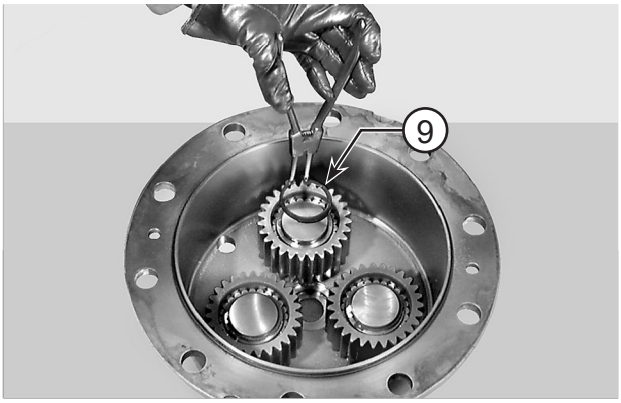

FIGURE 11: Remove the snap rings (9).

⚠CAUTION

MANDATORY PROCEDURE

Set the pliers following the correct procedure shown in END-STOP PLIER SETTING p. 15.

⚠WARNING

Removal of the snap rings can cause personal injuries. You must wear appropriate safety equipment. To avoid injury to eyes, wear eye protection equipment.

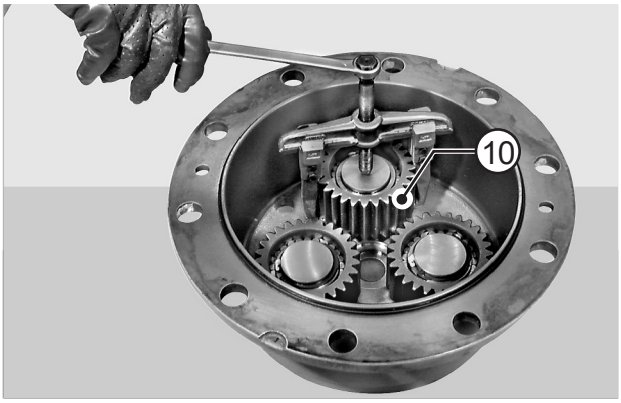

FIGURE 12: Using a puller, remove the planetary gears (10).

NOTE:

Write down direction of installation of planetary gears.

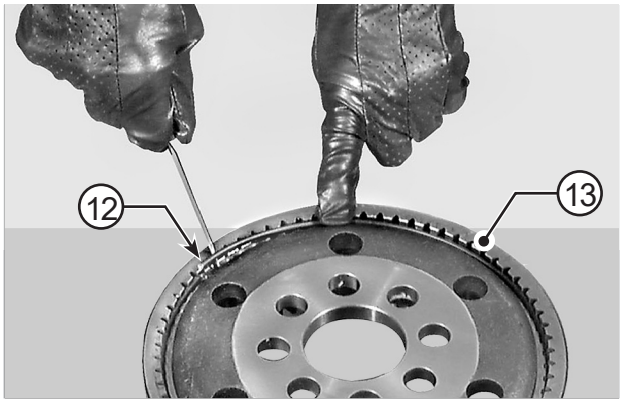

FIGURE 13: Remove the ring gear (13) snap ring

⚠WARNING

Removal of the snap rings can cause personal injuries. You must wear appropriate safety equipment. To avoid injury to eyes, wear eye protection equipment.

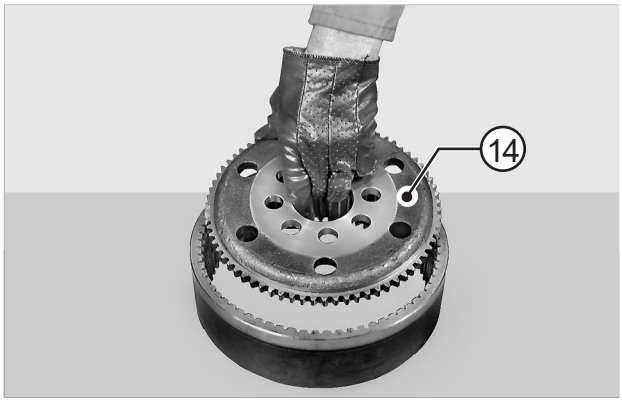

FIGURE 14: Remove ring gear flange (14).

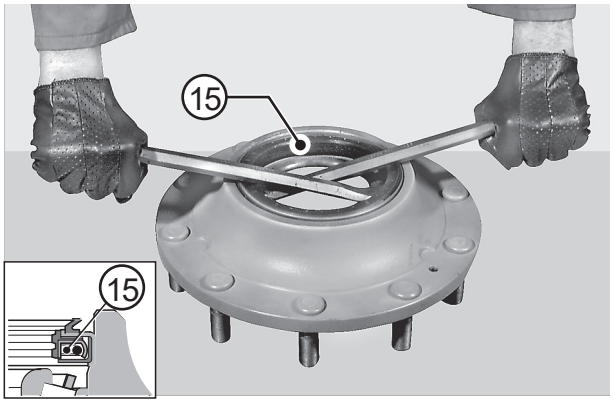

FIGURE 15: Remove seal ring (15) from wheel hub (7).

NOTE:

Mark the seal ring position.

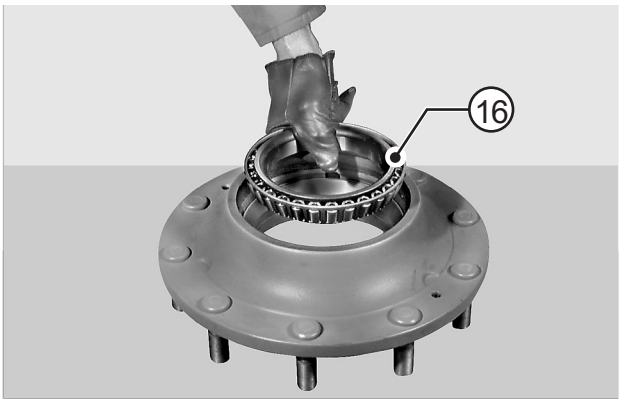

FIGURE 16: Remove inner bearing (16).

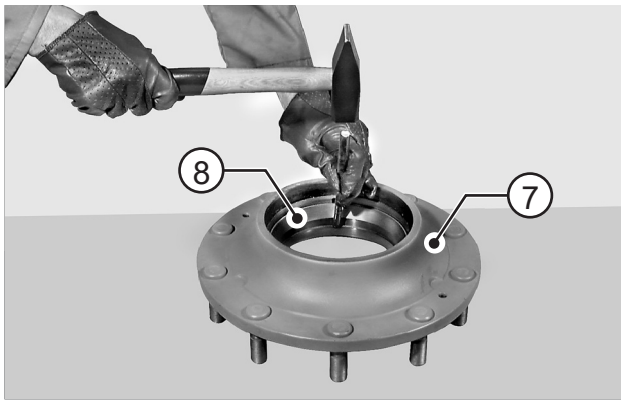

FIGURE 17: Remove the outer thrust blocks of bearings (8, 16) by inserting and hammering a pin driver in the slots provided on the hub (7).

NOTE:

Hammer alternately to avoid thrust block clamping and deformation.

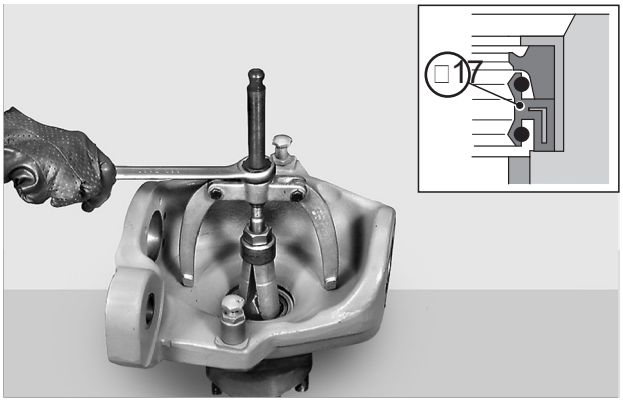

FIGURE 18: Using a puller, remove the seal ring (17) from steering case (3).

NOTE:

Write down seal ring orientation.

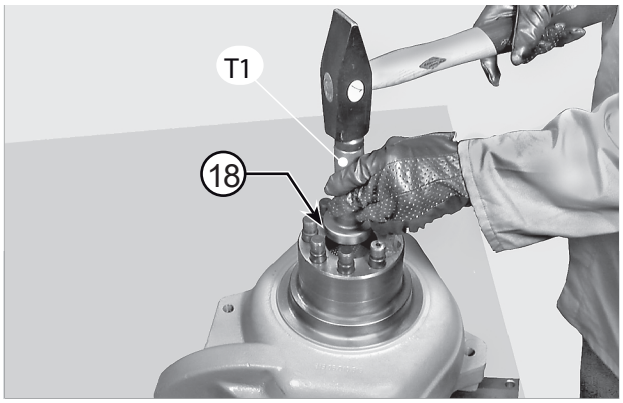

FIGURE 19: Using driver T1 (See drawing T1 p. 74), extract the guide bushing (18) of twin u-joint. Only if necessary, remove any damaged studs (19), which need to be replaced.

ASSEMBLY

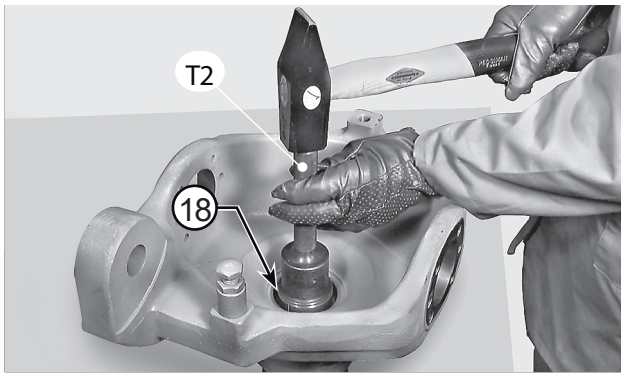

FIGURE 20: Fit the bushing (18) in the steering case (3) using tool T2 (See drawing T2 p. 74).

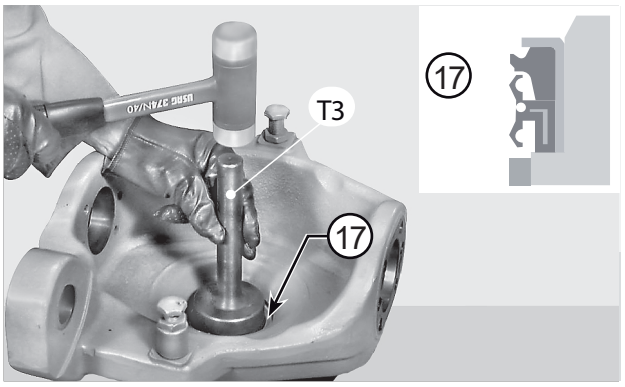

FIGURE 21: Apply a coat of AREXONS rubber cement to the outer metal surface of the snap ring (17). Position the seal ring and, using tool T3 (See drawing T3 p. 75), fit it in the appropriate seat.

⚠CAUTION

Check direction of installation carefully.

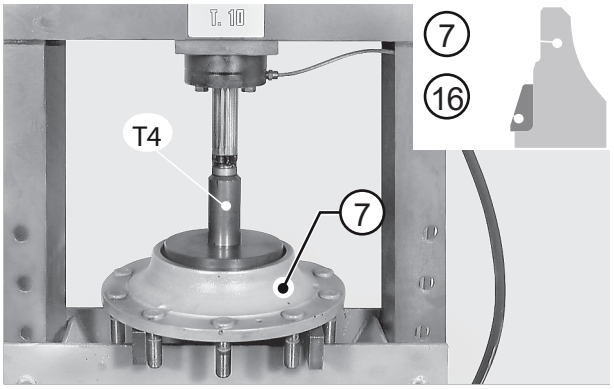

FIGURE 22: Position the wheel hub (7) under a press; lubricate the outer seat of bearing and, using tool T4 (See drawing T4 p. 76), install the thrust block of bearing (16).

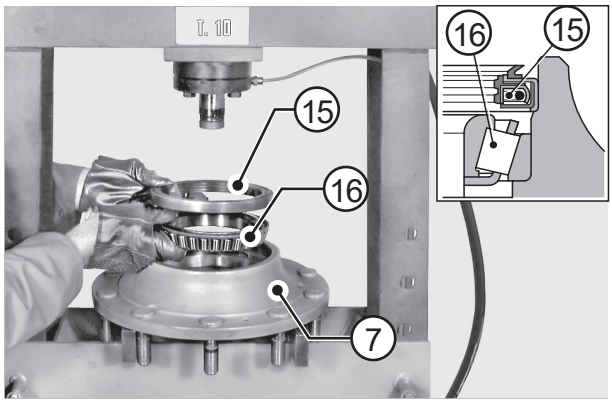

FIGURE 23: Install bearing (16).
Apply Arexons seal rubber cement to the outer surface of seal ring (15). Position the seal ring (15) in the hub (7).

⚠CAUTION

Check ring orientation carefully.

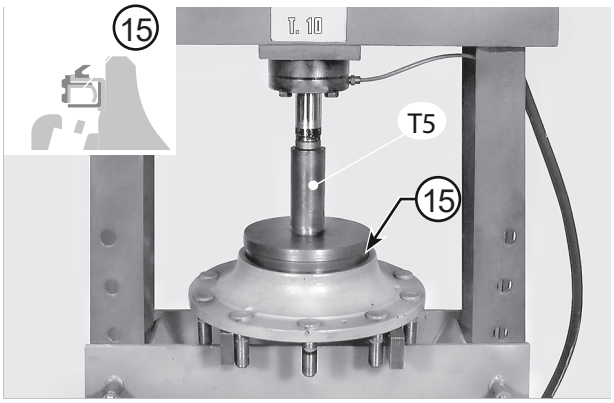

FIGURE 24: Position tool T5 (See drawing T5 p. 77) and press the seal ring (15) into its seat.

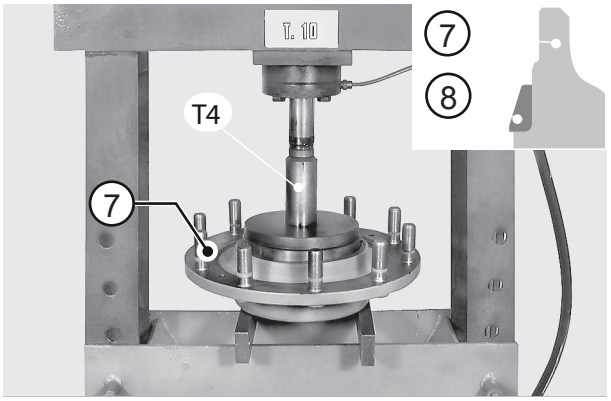

FIGURE 25: Turn the hub over (7), lubricate bearing seat and, using tool T4 (See drawing T4 p. 76) install the thrust block of bearing (8).

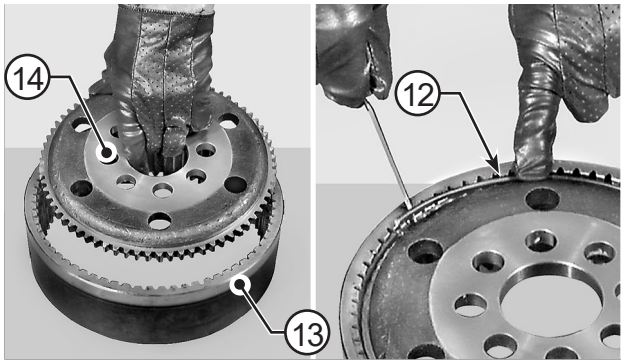

FIGURE 26: Fit the flange (14) in the ring gear (13) and lock into position with snap ring (12).

⚠WARNING

Personal injury can result when installing snap ring. The appropriate safety equipment must be worn. To avoid injury to your eyes, wear protective glasses during this procedure.

NOTE:

Check that snap ring (12) is fully inserted in the slot of ring gear (13).

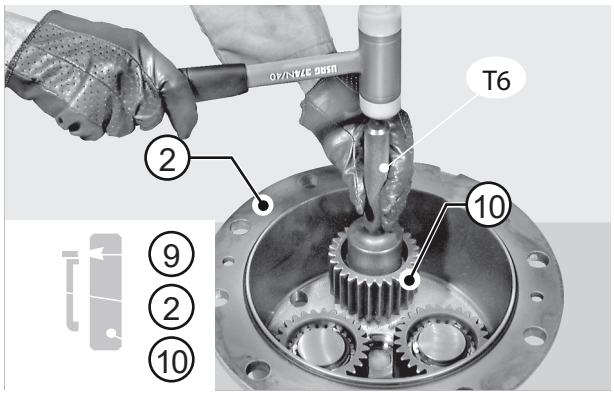

FIGURE 27: Mount gears (10) onto the pins of the planetary cover (2).
To insert gears, use tool T6 (See drawing T6 p. 77).

⚠CAUTION

The radiused part of bearings' inner ring must face the bottom of the pin.

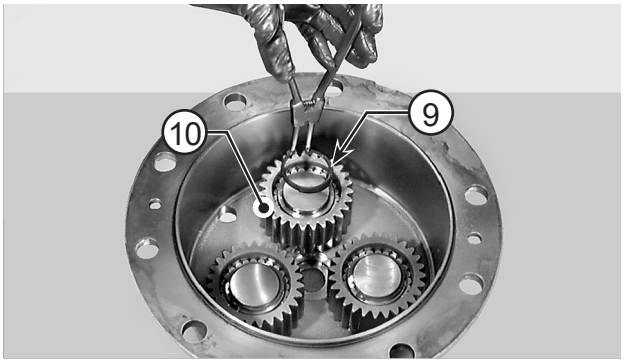

FIGURE 28: Lock gears (10) into position by installing the snap rings (9).

⚠CAUTION

MANDATORY PROCEDURE

Set the pliers following the correct procedure shown in END-STOP PLIER SETTING p. 15.

⚠WARNING

Personal injury can result when installing snap ring. The appropriate safety equipment must be worn. To avoid injury to your eyes, wear protective glasses during this procedure.

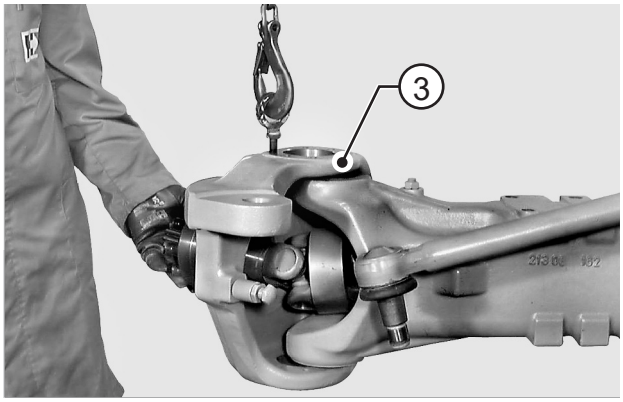

FIGURE 29: Oil the seal ring and bushing. Slip the steering case (3) onto the twin u-joint. Fit the pivot pins and connect the steering bar.
For details, see COMPLETE STEERING CASE p. 33 and STE-ERING CYLINDER (STANDARD VERSION) p. 79.

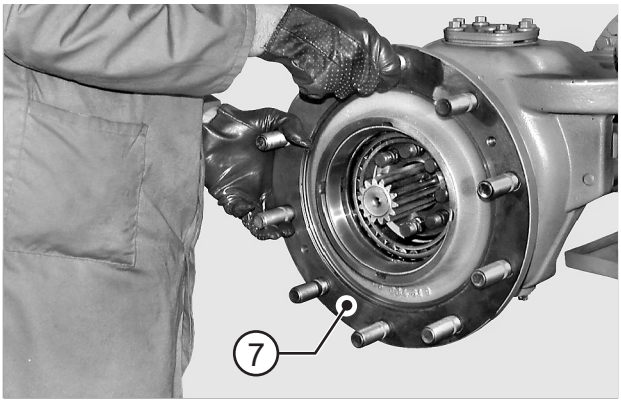

FIGURE 30: Install the wheel hub (7) onto the steering case (3).

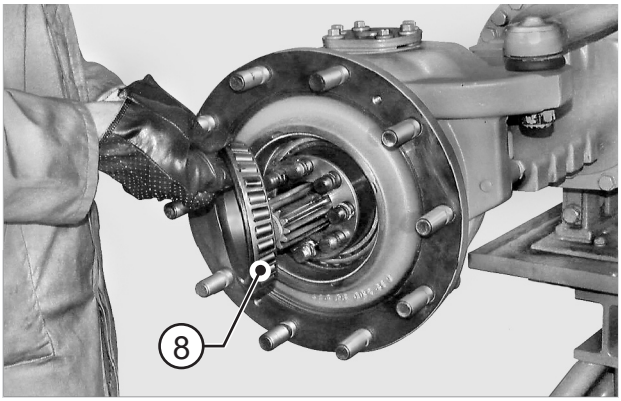

FIGURE 31: Install the outer bearing (8).

NOTE:

Push the bearing as far as it will go by tapping with a plastic hammer all around the rim.

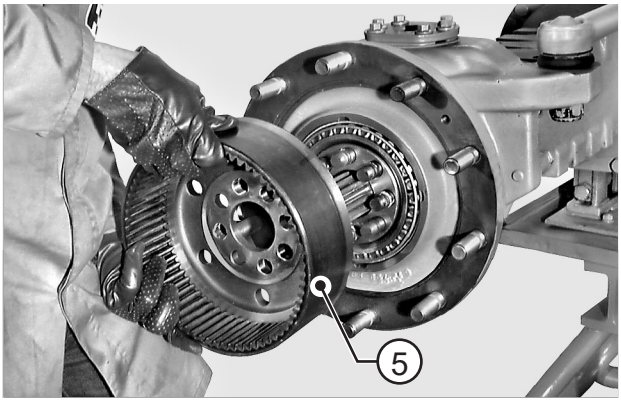

FIGURE 32: Install the complete ring gear flange (5).

NOTE:

To engage the flange (5), use a plastic hammer and hammer alternately on several equidistant points.

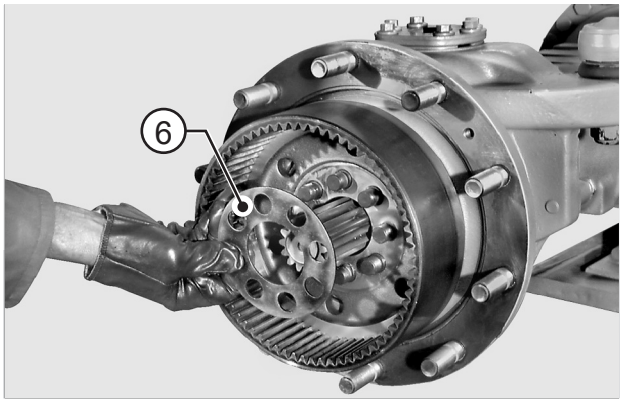

FIGURE 33: STANDARD NUTS MODELS:
Ensure that faces are thoroughly cleaned, and then mount the safety flange (6).

NOTE:

SAFETY PLATE ONLY FOR STANDARD NUTS

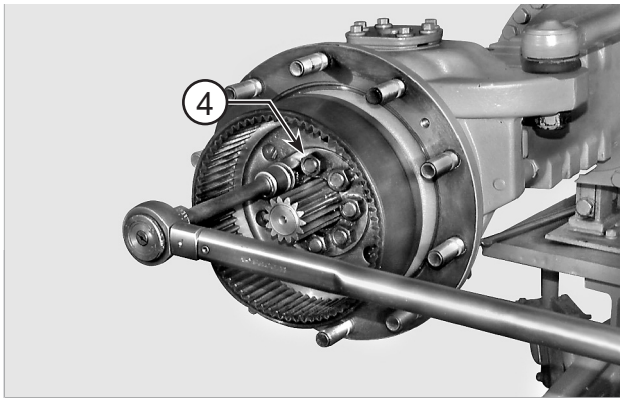

FIGURE 34: STANDARD NUTS MODELS:
Install the new nuts (4) and tighten them, using the criss-cross method applying initial tightening torque of 100 N·m. Pay attention to clean the thread of the original stud. Final torque wrench setting: 300 - 385 N·m.

⚠CAUTION

It is recommended to use only new components. Use only new screws pre-treated with Driloc locking adhesive. Threads must be cleaned from oil.

Clean the thread in the arm.

Degrease only non pre-treated threads.

NOTE:

If studs have been removed or got loose during nuts (4) removal, clean the thread in the arm and replace the studs tightening to 70 - 110 N·m.

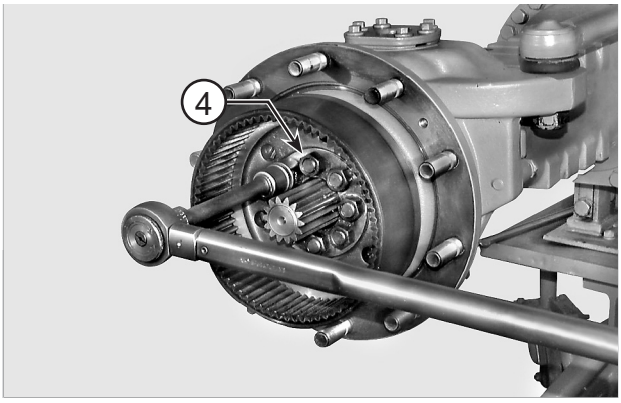

FIGURE 35: FLANGED NUTS MODELS:
Install the new nuts (4) and tighten them, using the criss-cross method applying initial tightening torque of 100 N·m. Pay attention to clean the thread of the original stud. Final torque wrench setting: 410 - 450 N·m.

⚠CAUTION

It is recommended to use only new components.

Use only new screws pre-treated with Driloc locking adhesive. Threads must be cleaned from oil.

Clean the thread in the arm.

Degrease only non pre-treated threads.

NOTE:

DON'T USE THE SAFETY PLATE ON FLANGED NUTS MODELS

NOTE:

If studs have been removed or got loose during nuts (4) removal, clean the thread in the arm and replace the studs tightening to 70 - 110 N·m.

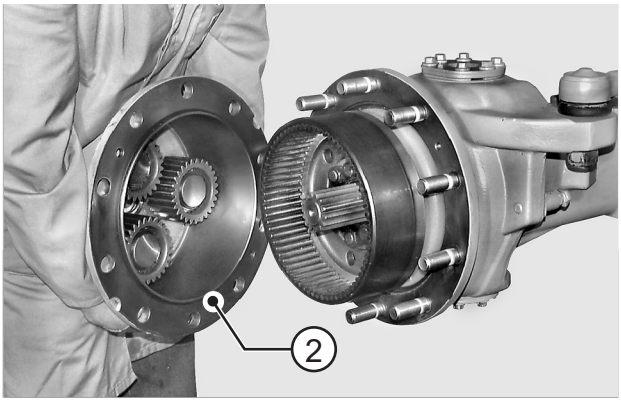

FIGURE 36: Fit the planetary cover (2) on the wheel hub (7).

⚠CAUTION

Check condition and position of o-ring (11).

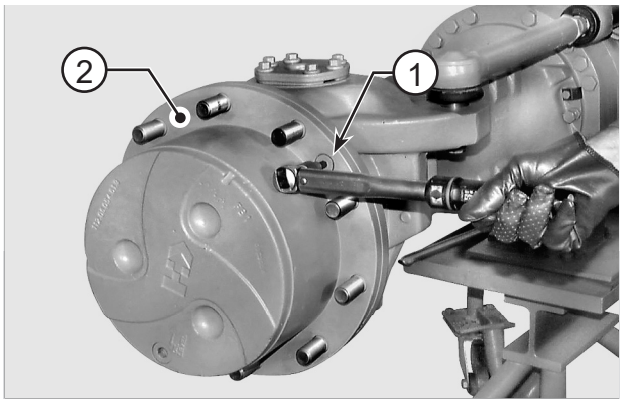

FIGURE 37: Lock the planetary cover (2) with screws (1) to 40 - 50 N·m.

SPECIAL TOOLS

T1

P/N: 2364

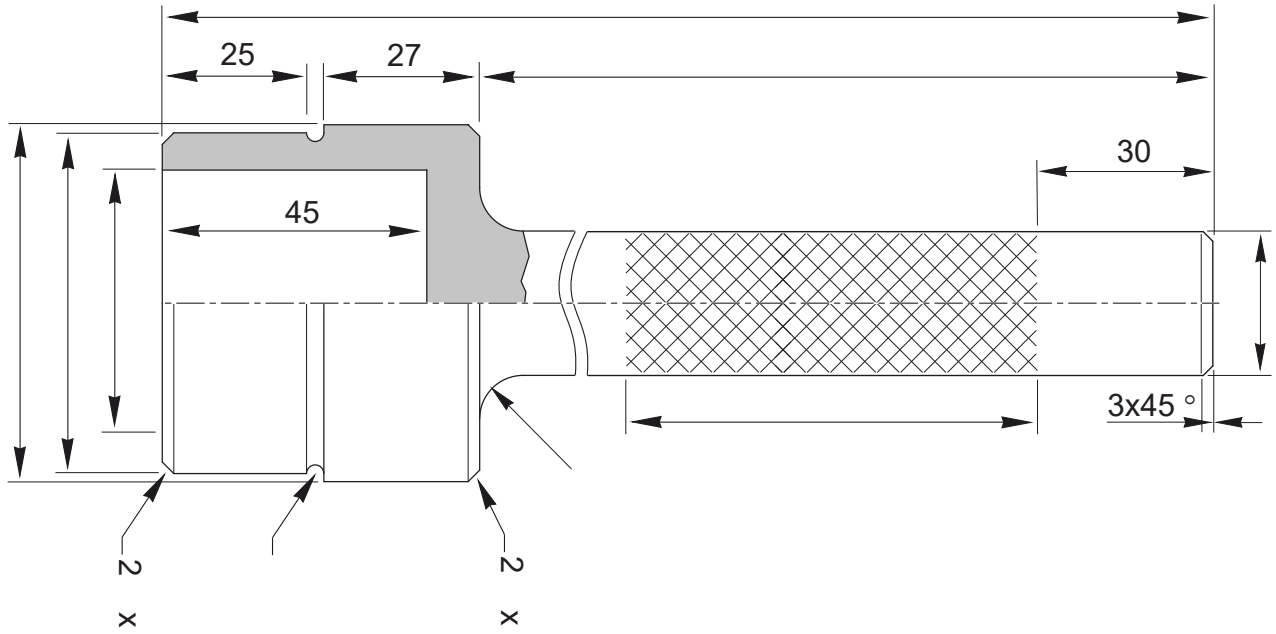

T2

P/N: 3348

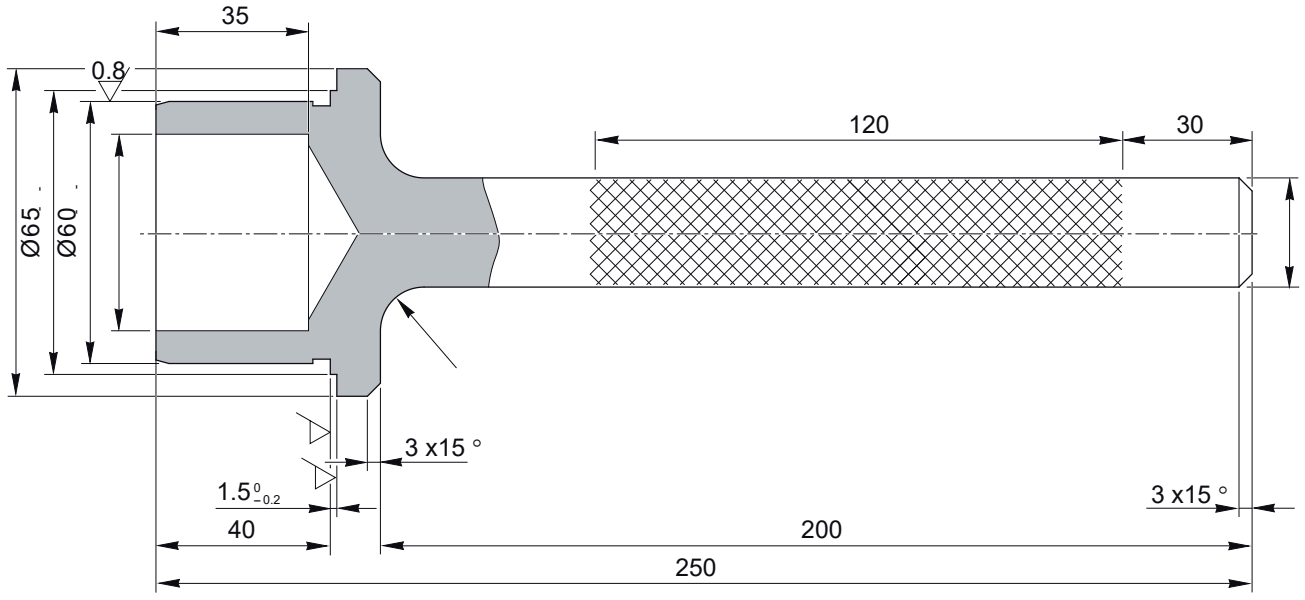

T3

P/N: 2365

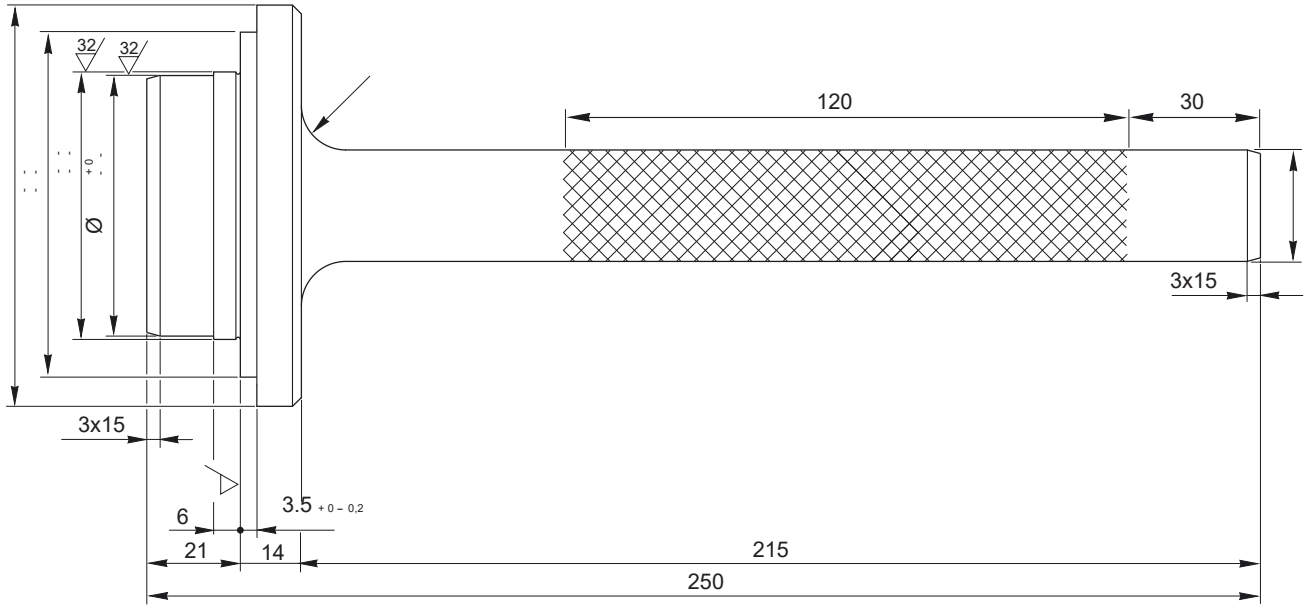

T4

P/N: 3265

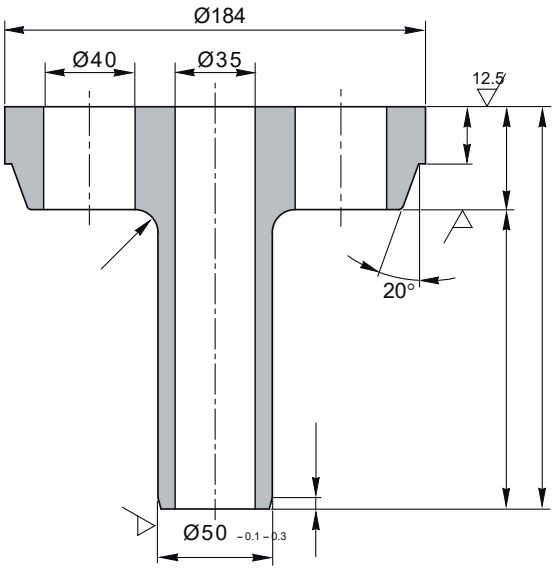
Ø184
Ø40
Ø35
12.5
20°
Ø50 -0.1 -0.3

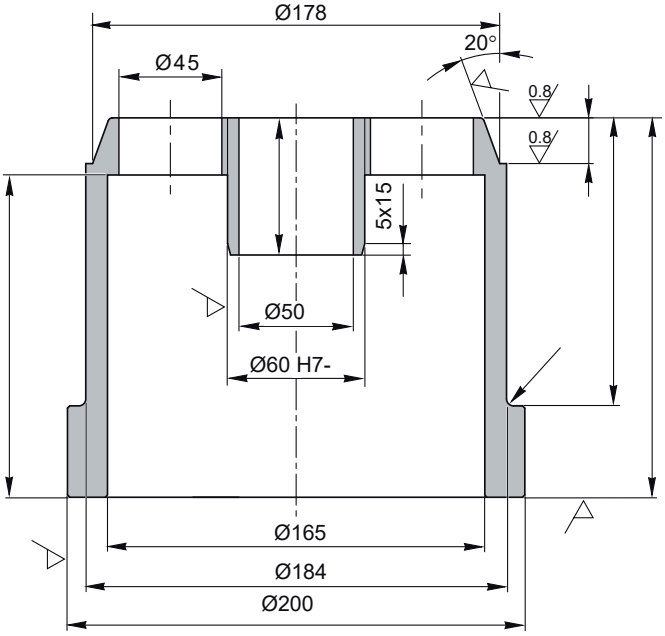
Ø178
20°
Ø45
0.8
0.8
5x15
Ø50
Ø60 H7-
Ø165
Ø184
Ø200

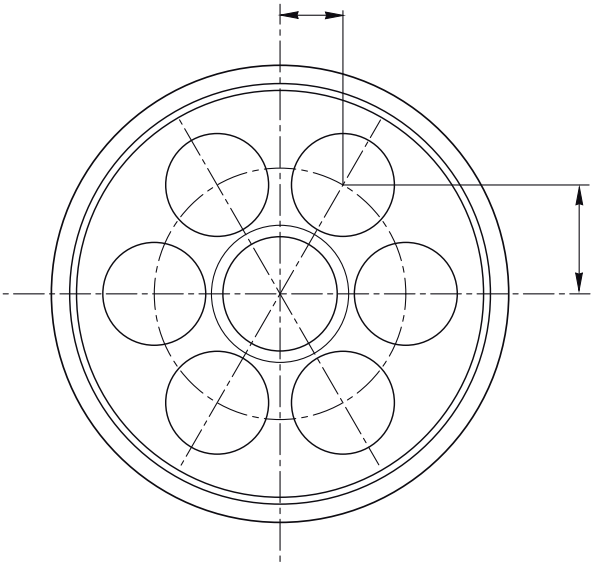

T5

P/N: 2366

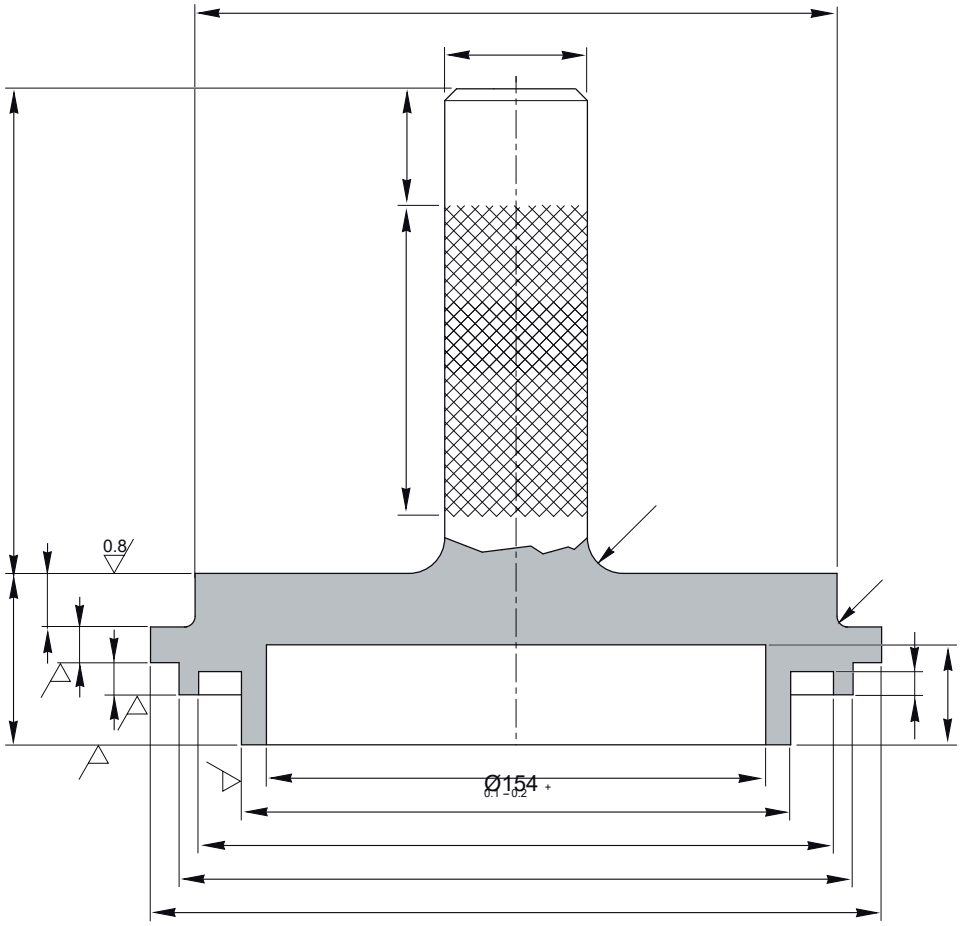

T6

P/N: 2378

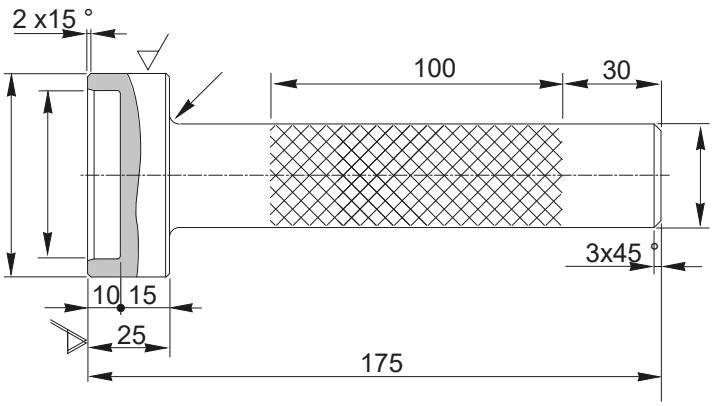

STEERING CYLINDER (STANDARD VERSION)

WRENCH DIMENSIONS

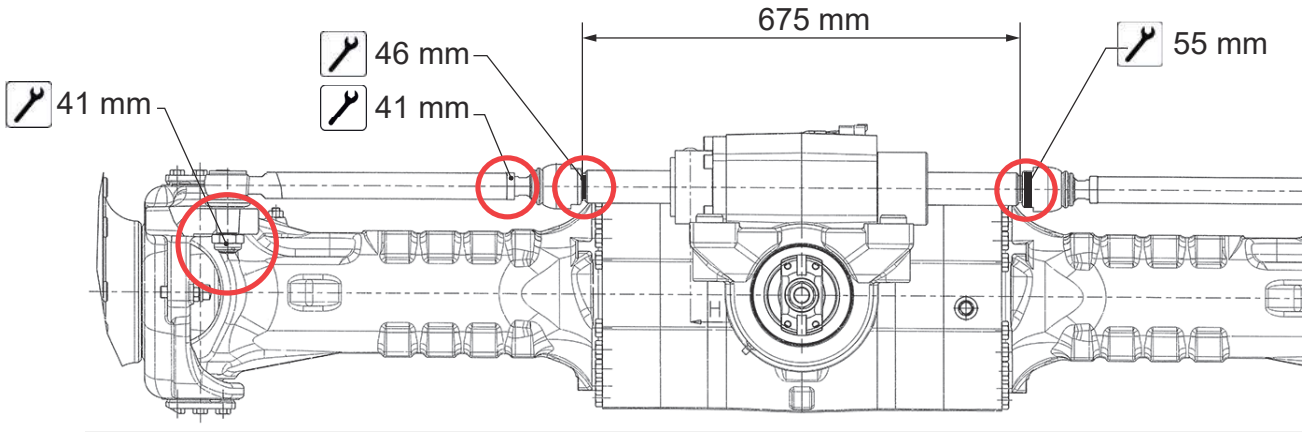

EXPLODED VIEW

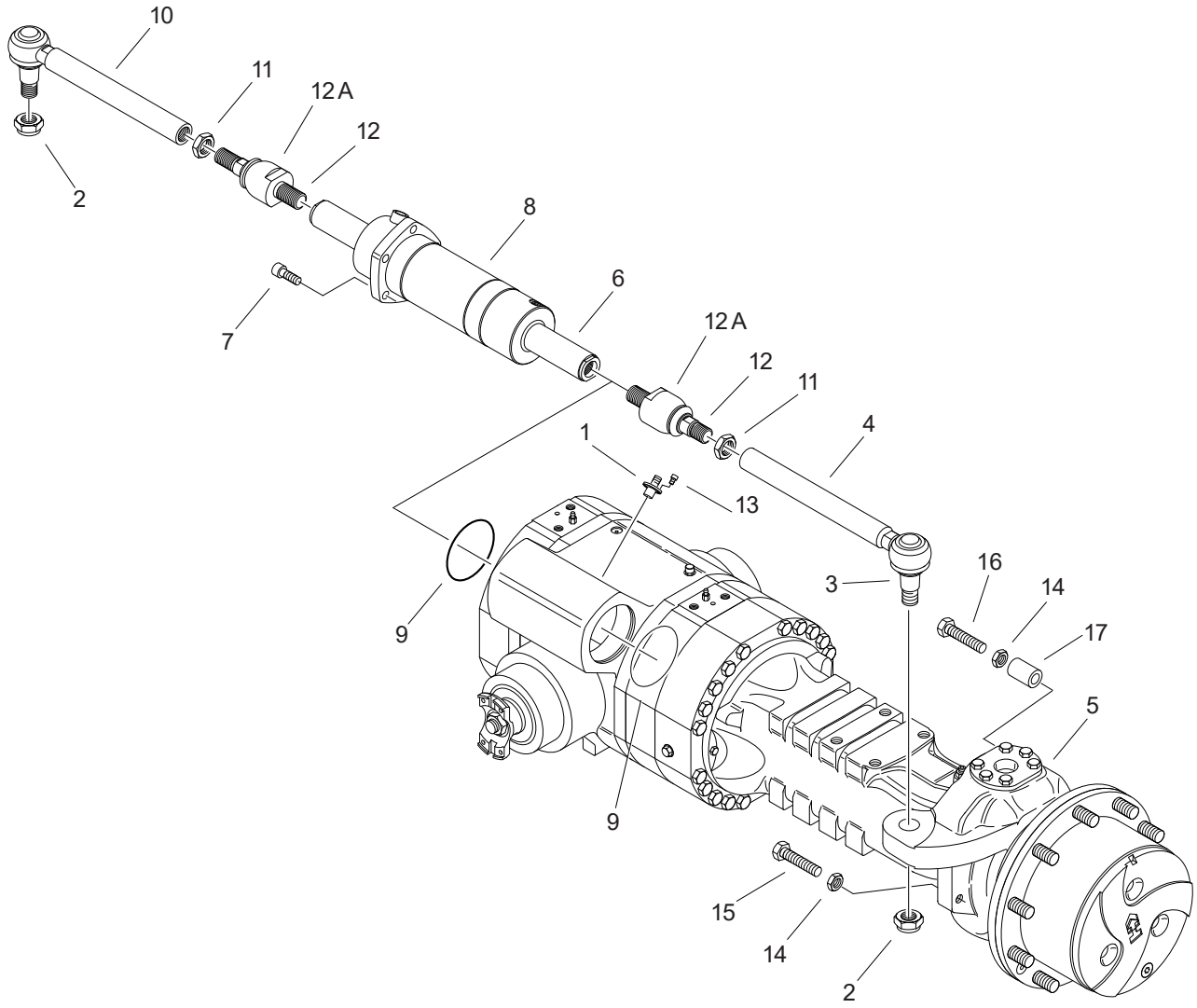

DISASSEMBLY

⚠CAUTION

Before draining oil, release the internal pressure, for details see OIL DRAINING MANDATORY PROCEDURE p. 14.

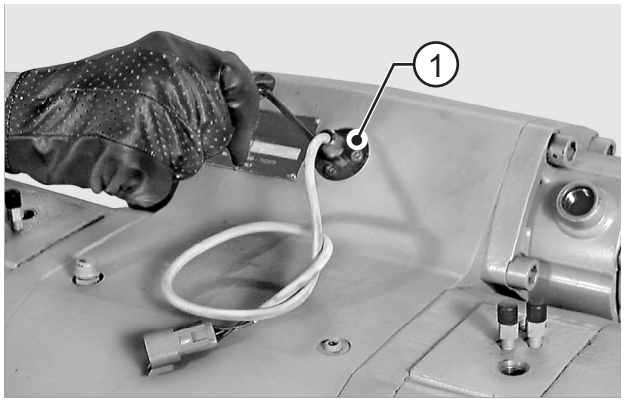

FIGURE 1: If required, remove the steering piston stroke centering sensor (1).

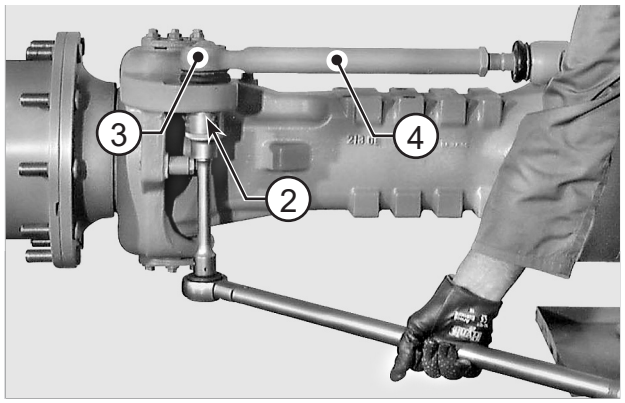

FIGURE 2: Loosen the check nuts (2) on the joints (3) of the steering bars (4) and remove nuts.

NOTE:

Should the joint rotate, hold it with a wrench inserted in the seat provided.

⚠CAUTION

The self-locking nuts (2) must be replaced once every 5 disassemblies.

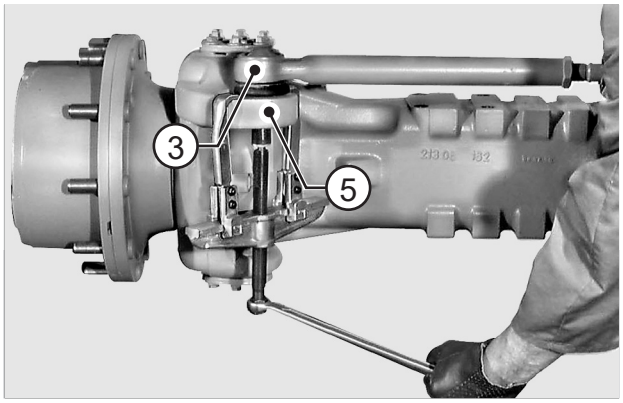

FIGURE 3: Using a puller, disconnect the tapered pins of the joints (3) from the steering cases (5).

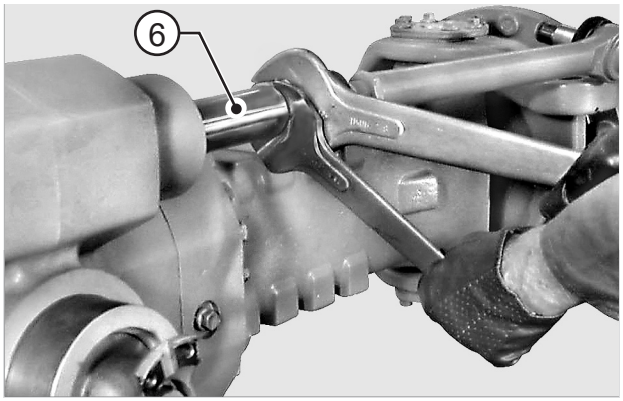

FIGURE 4: Disconnect left and right steering bars from piston (6).

⚠CAUTION

To ease bar removal, heat the threaded portion of the piston to approximately 212 °F [100 °C] with a heat gun.

⚠WARNING

Wear protective garments when handling hot objects.

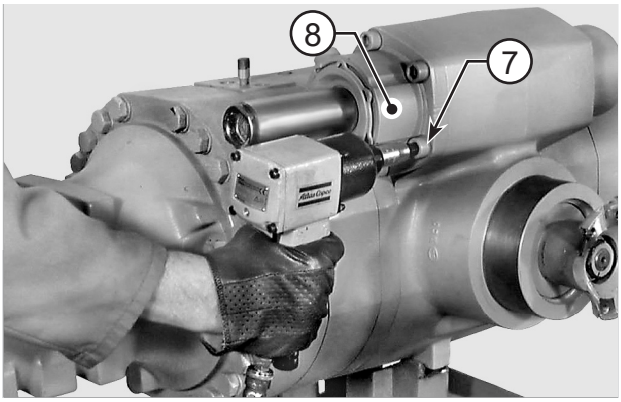

FIGURE 5: Loosen and remove the check screws (7) of steering cylinder (8).

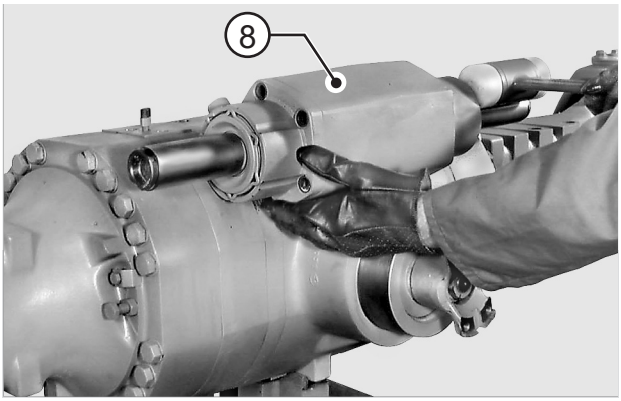

FIGURE 6: Extract the steering cylinder (8) using a plastic hammer.

NOTE:

For cylinder disassembly, see STEERING CYLINDER (STANDARD VERSION) p. 79.

⚠CAUTION

Before attempting to disassemble the unit, drain the oil in the cylinder chambers completely.

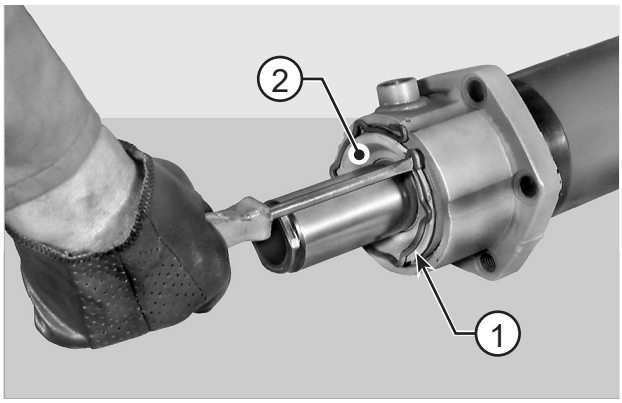

FIGURE 7: Using a screwdriver, remove the cylinder head (2) snap ring (1).

⚠WARNING

Removal of the snap rings can cause personal injuries. You must wear appropriate safety equipment. To avoid injury to eyes, wear eye protection equipment.

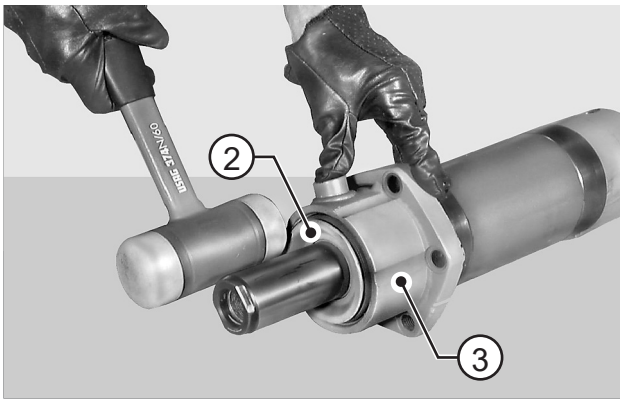

FIGURE 8: Lightly tap the cylinder head (2) with a plastic hammer to push it inside the cylinder (3).

NOTE:

Insert the cylinder head flush with the cylinder.

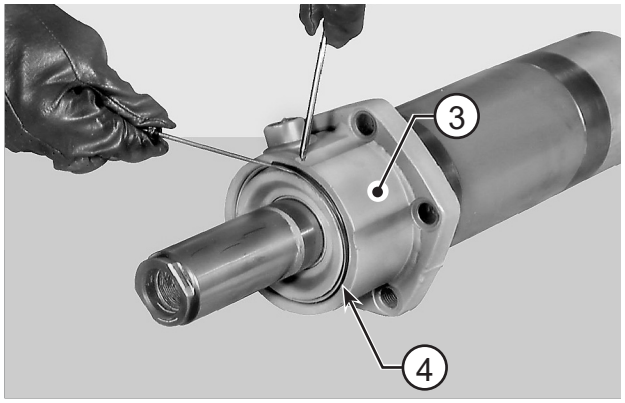

FIGURE 9: Using a punch, force the stop ring (4) located inside the cylinder (3) and extract ring using a screwdriver.

⚠WARNING

Removal of the snap rings can cause personal injuries. You must wear appropriate safety equipment. To avoid injury to eyes, wear eye protection equipment.

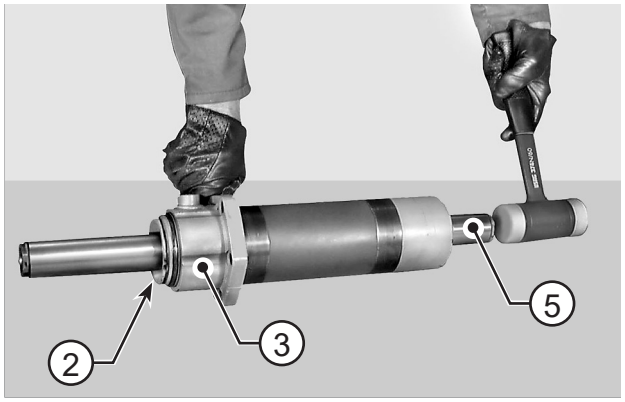

FIGURE 10: Using a plastic hammer, hammer the piston (5) so it strikes against the head (2).
Continue until the head (2) is ejected from the cylinder (3).

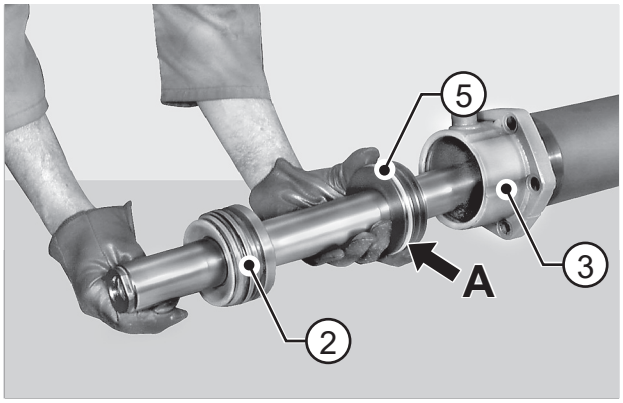

FIGURE 11: Take the cylinder unit (3) apart by extracting the head (2) first, followed by the piston (5). Remove all seals, anti-extrusion rings, and scraper rings from head (2), cylinder (3), and piston (5).

⚠CAUTION

During disassembly document the direction of seal ring "A" on the piston (5) as some models are assembled differently.

NOTE:

1 - All seals must be replaced at each disassembly.
2 - Pay particular attention not to damage seal seats and piston beds.

ASSEMBLY

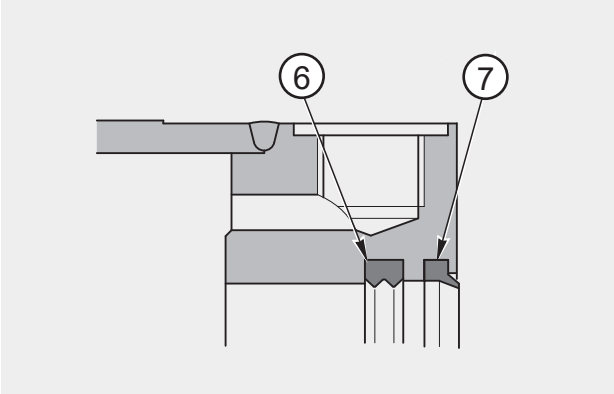

FIGURE 12: Grease and install the piston rod seal ring (6) and scraper ring (7) into cylinder (3).

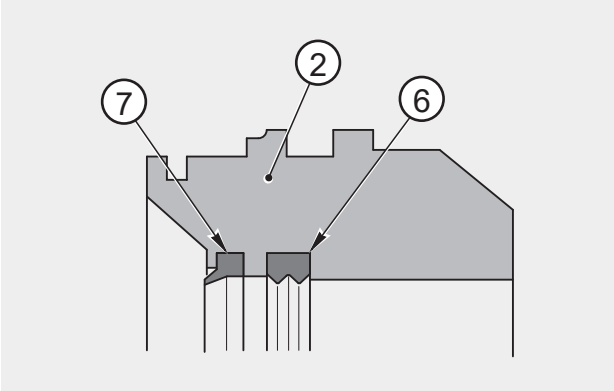

FIGURE 13: Grease and install the piston rod seal ring (6) and scraper ring (7) into the head (2).

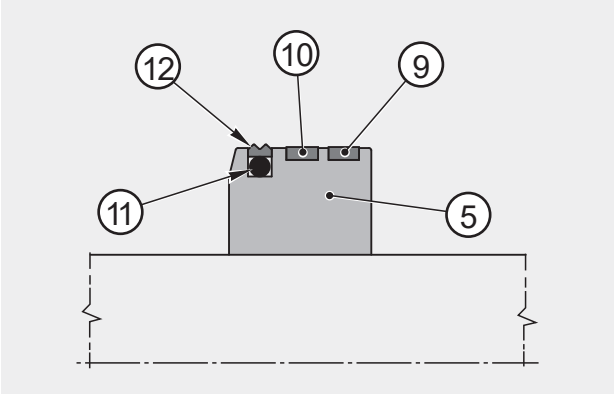

FIGURE 14: Fit seal (8) on the outside of the head (2).

⚠CAUTION

1 - To ease installation, grease the outer surface of the piston.
2 - Do not roll the seal (8).

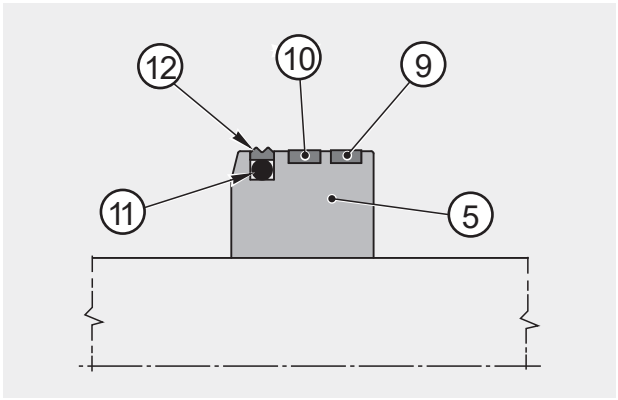

FIGURE 15: Prepare piston (5) by fitting it with guide ring (9), magnetic ring (10), o-ring (11), and seal (12).

⚠CAUTION

1 - To ease installation, lubricate with grease.
2- If a centring sensor is not required, the magnetic ring (10) can be replaced with an additional guide ring (9).

F
m

F
o
in

I

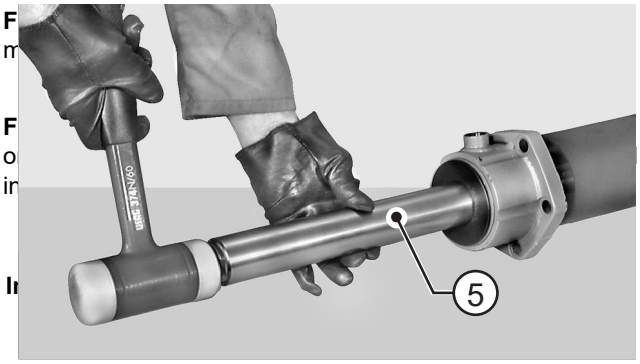

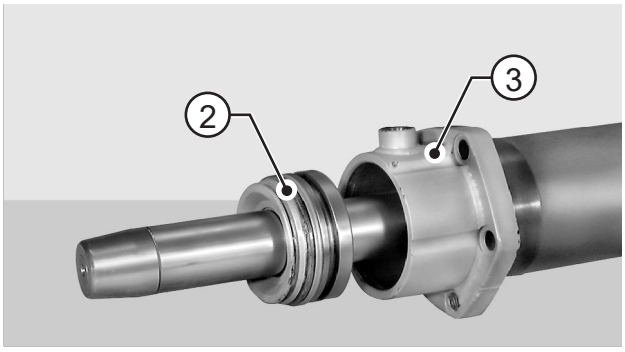

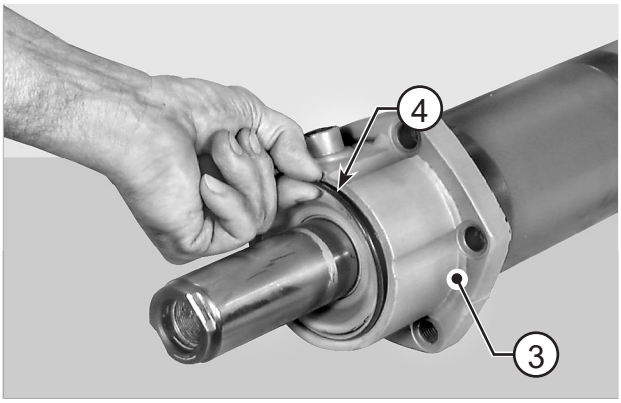

FIGURE 18: Install the stop ring (4) and ensure that it sets in the seat of cylinder (3).

⚠WARNING

Personal injury can result when installing snap ring. The appropriate safety equipment must be worn. To avoid injury to your eyes, wear protective glasses during this procedure.

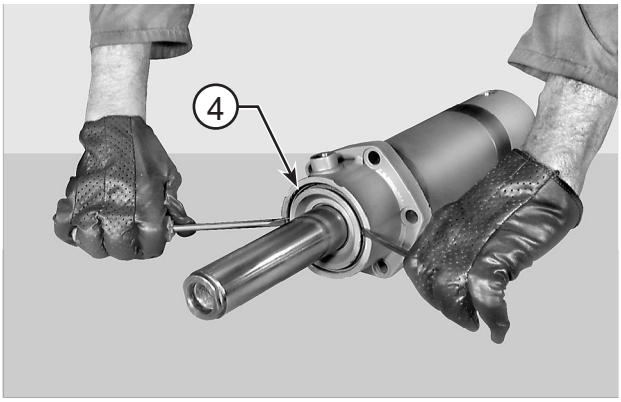

FIGURE 19: Using two screwdrivers or levers, force the head until it is seated against the stop ring (4).

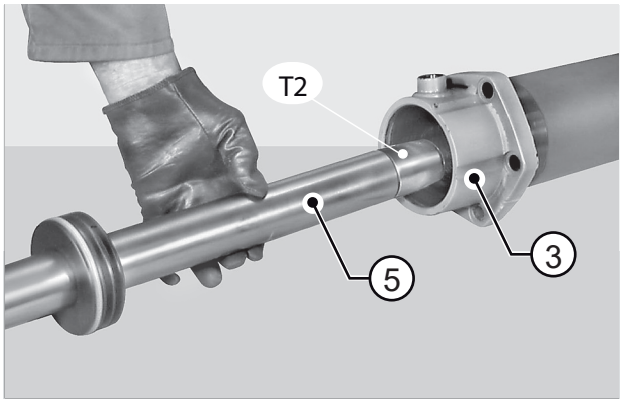

FIGURE 20: Apply tool T2 (See drawing T2 p. 90) to the piston rod on non-head side (2) and center rod into cylinder (3) to fit it into piston (5).

NOTE:

Lightly grease seals and cylinder.

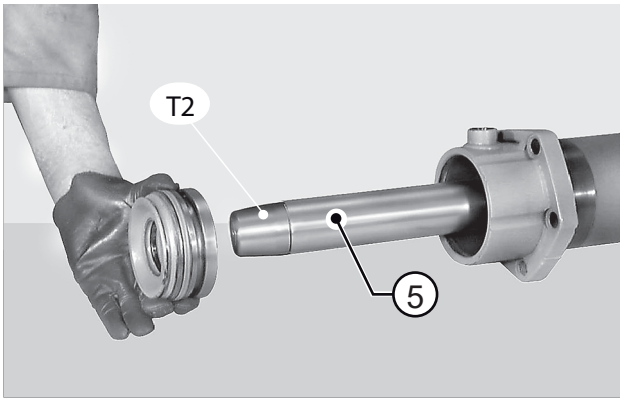

FIGURE 21: Remove tool T2 (See drawing T2 p. 90) and apply it to the opposite side of the piston (5).

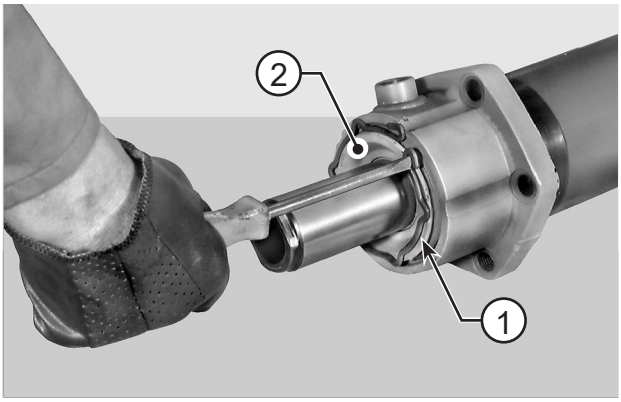

FIGURE 22: Install the snap ring (1) of head (2). If necessary, force it into the seat with a punch and hammer.

⚠CAUTION

MANDATORY PROCEDURE

Set the pliers following the correct procedure shown in END-STOP PLIER SETTING p. 15.

⚠WARNING

Personal injury can result when installing snap ring. The appropriate safety equipment must be worn. To avoid injury to your eyes, wear protective glasses during this procedure.

⚠CAUTION

Make sure the snap ring (1) fits snugly in its seat.

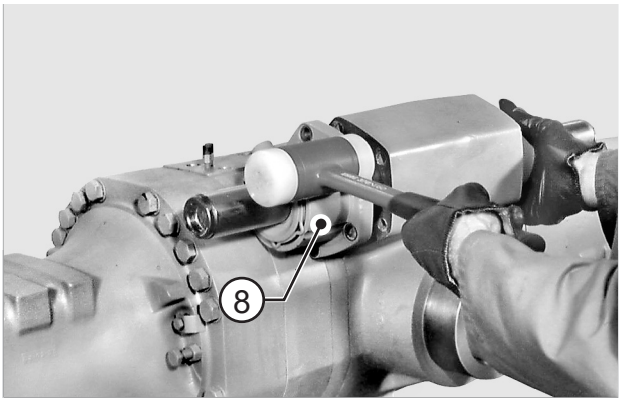

FIGURE 23: Check the condition of the axle unit's o-rings (9). Grease piston seats with Tecnolube Seal 101 and install cylinder using a plastic hammer.

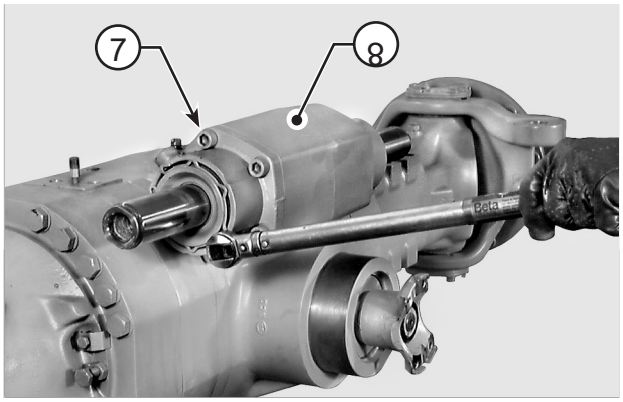

FIGURE 24: Block cylinder (8) with screws (7) coated with Loctite 242 and tighten to 180 - 200 N·m.

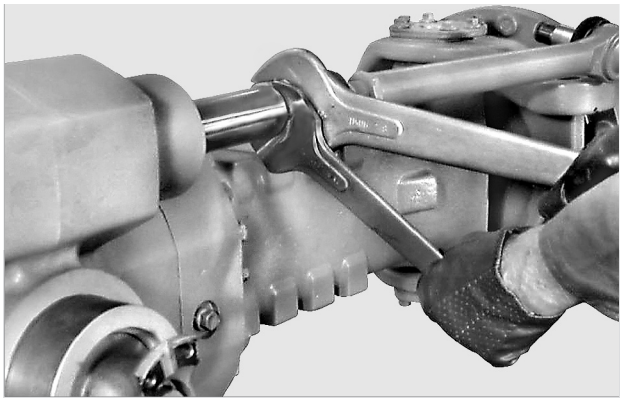

FIGURE 25: Apply Loctite 242 to the threaded portion of the steering bars and connect the bars by tightening the ends in the piston rod. Tightening torque: 430 - 470 N·m.

⚠CAUTION

Remove grease from the threads using an activator before applying the thread locking compound.

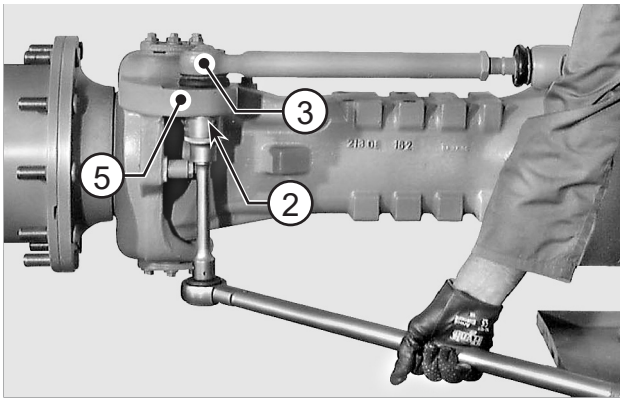

FIGURE 26: Introduce the pins (3) in the steering cases (5) and lock into position with nuts (2) tightened to a torque of 350 - 390 N·m.

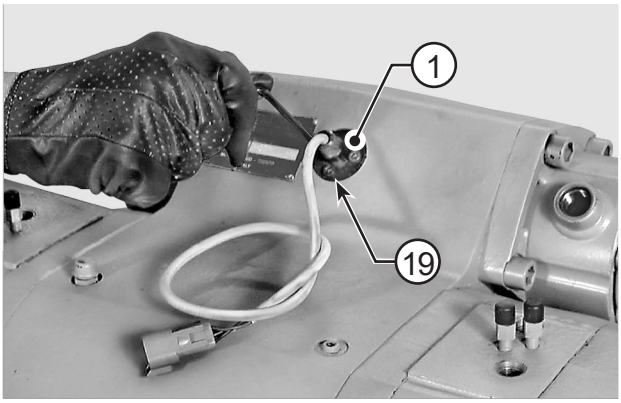

FIGURE 27: If required, install the steering piston stroke centering sensor (1) and tighten screws (13) to 5 - 6 N·m

⚠CAUTION

If required, eliminate the action of the negative brake.

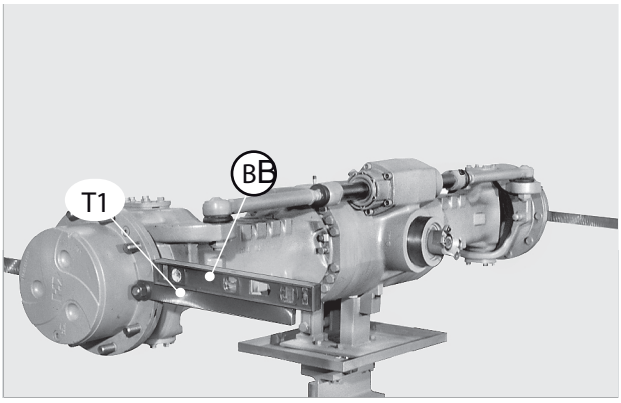

FIGURE 28: Apply tools T1 (See drawing T1 p. 90) onto the wheel hubs and lock tools.
Check that tools are perfectly flat and parallel to each other using a level "B".

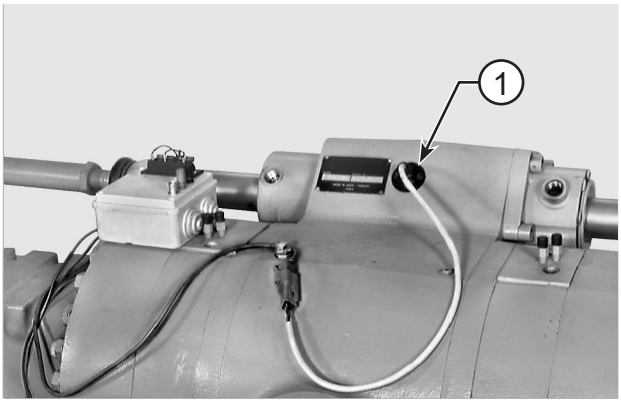

FIGURE 29: Connect the sensor (1) to the control device according to either of the following diagrams.

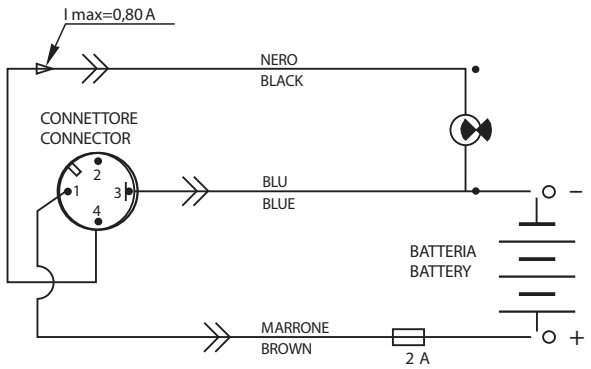

FIGURE 30: Sensor wiring diagram for STANDARD version.

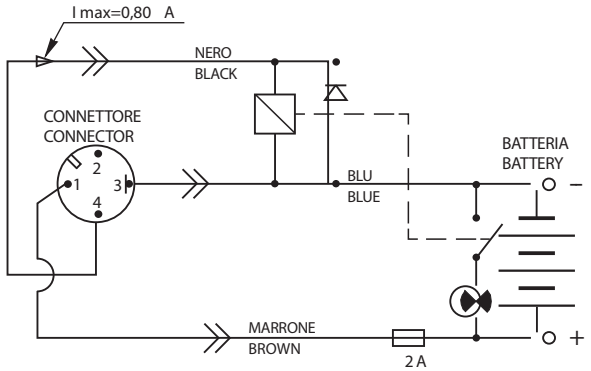

FIGURE 31: Sensor wiring diagram for OPTIONAL version.

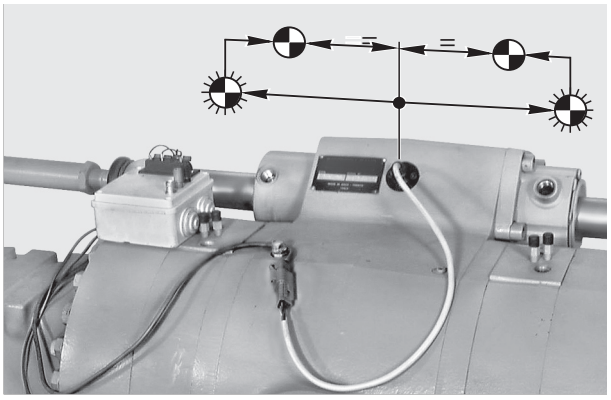

FIGURE 32: Center by slowly moving the piston first in one direction, then in the opposite one. Position the piston in the middle point of the stroke, which is determined by the control device signalling lamp turning on and switching off in the reverse stage.

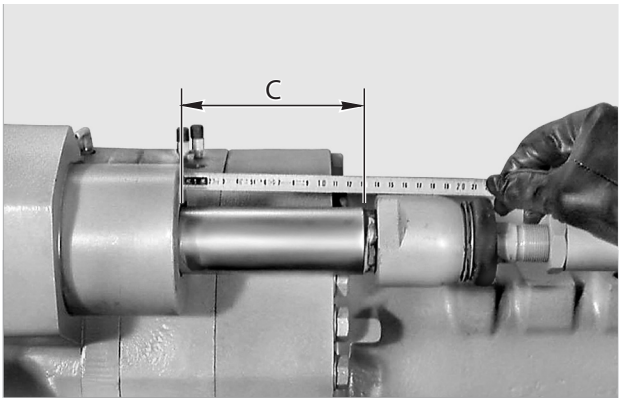

FIGURE 33: Check distance "C" of piston on either of the two sides and write down distance dimension to check subsequent adjustments.

NOTE:

For cylinders without sensors, piston must be centered based on maximum stroke.

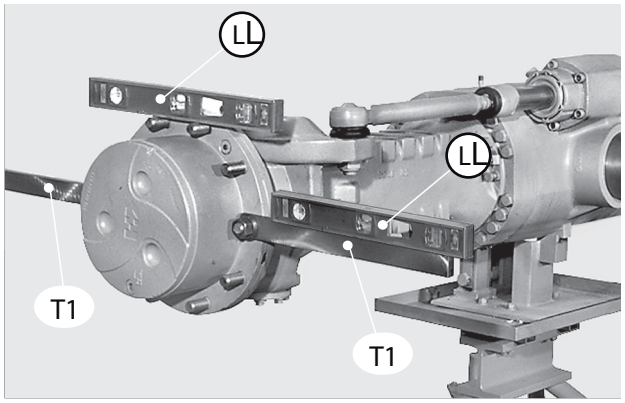

FIGURE 34: Lay level "L" on two upper studs and line them up. Apply tools T1 (See drawing T1 p. 90) to the two horizontal studs; hold them in position with two nuts, level them, and finally lock into position.

⚠CAUTION

Make sure that tools T1 (See drawing T1 p. 90) perfectly adhere to wheel face.

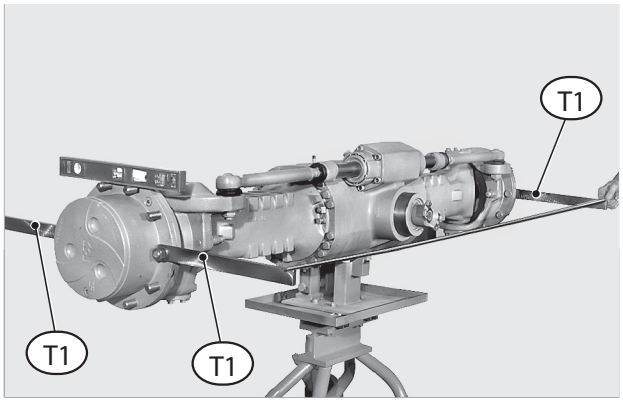

FIGURE 35: Without moving the piston, check front “B” and rear “A” using tool T1 (See drawing T1 p. 90) at “R” value. R = 400 mm (see picture below).

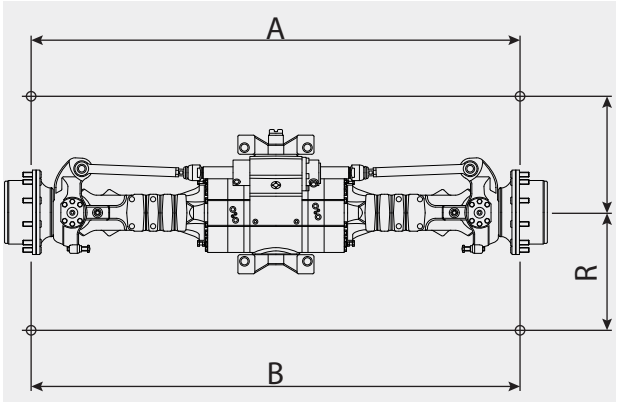

FIGURE 36: Adjust the convergence with a difference between “A” and “B” of maximum 2,5 mm.
A ± B = 2,5 mm
R = 400 mm

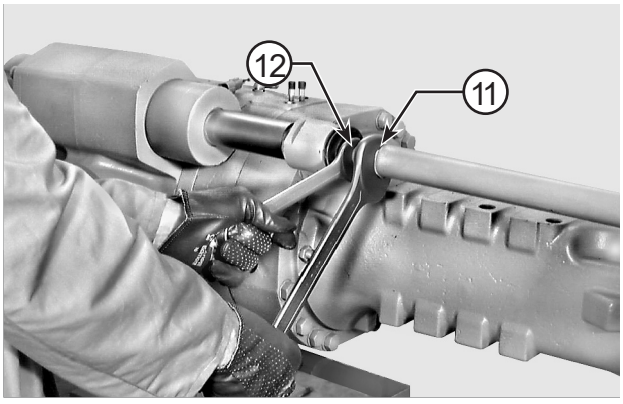

FIGURE 37: TOE-IN If necessary, adjust alignment after loosening the check nuts (11) of ball pins (12).

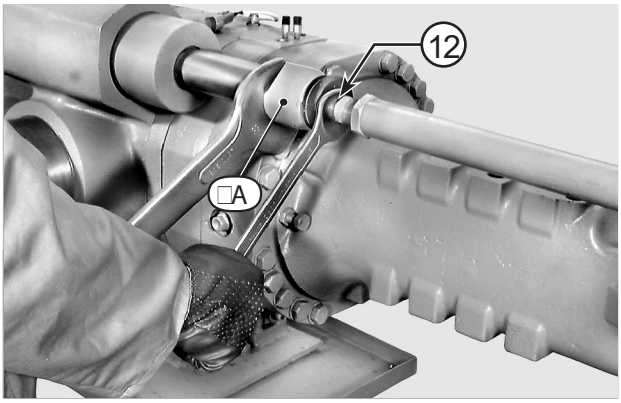

FIGURE 38: Hold joints (12A) tight and rotate the ball pins (12) until tools T1 (See drawing T1 p. 90) become parallel to

NOTE:

1 - Loosen the nuts by a few turns.
2 - Half a turn of the pin will reduce the front distance by about 3 mm and increase the rear one by about 3 mm.

F
T

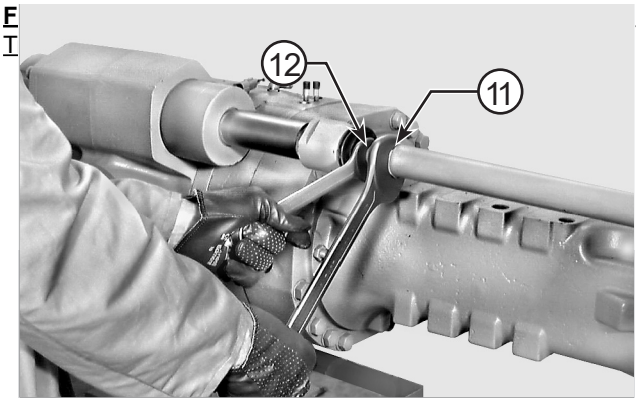

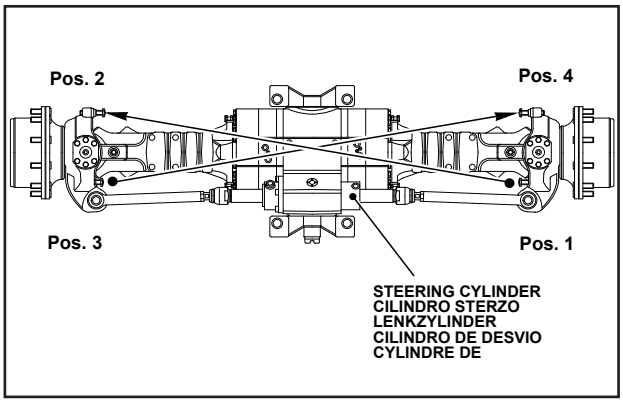

FIGURE 40: ADJUSTING THE STEERING
Loosen the nut of one of the adjusting screws on cylinder side.

NOTE:

Perform the same operations on both sides (see diagram).

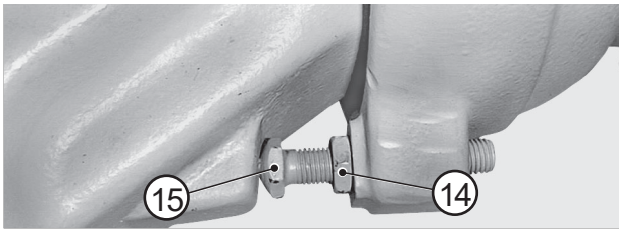

FIGURE 41: Adjust the distance of the screw (15) according to required data setting. Lock into position with nut (14) tightened to 145 - 148 N·m.

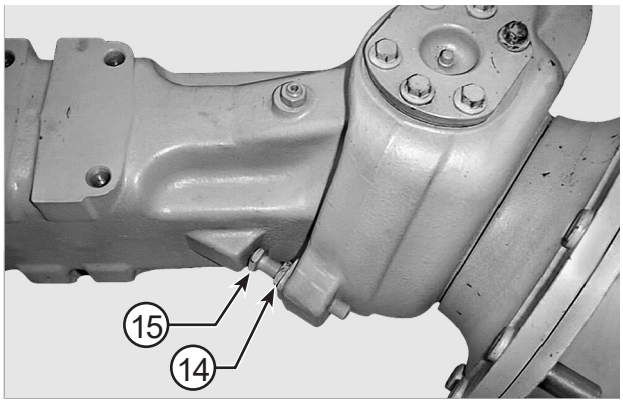

FIGURE 42: Perform one full steering operation until the adjusted screw (15) leans against the arm stop.

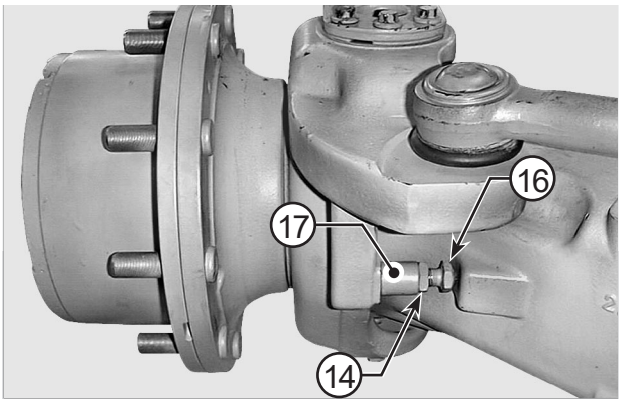

FIGURE 43: While holding the adjustment screw in position against the arm stop, adjust the screw opposite (16), on non-cylinder side, until it leans against the arm stop.

⚠CAUTION

The screws (15, 16) must lean against the respective arm stops all at the same time.

SPECIAL TOOLS

T1

P/N: 2367

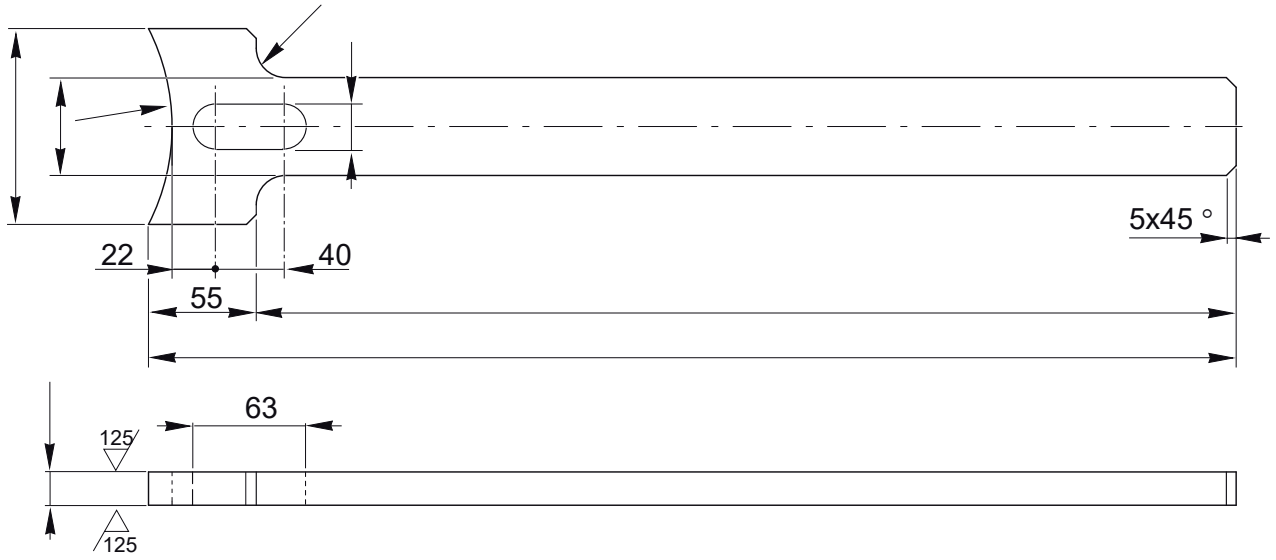

T2

P/N: 2368

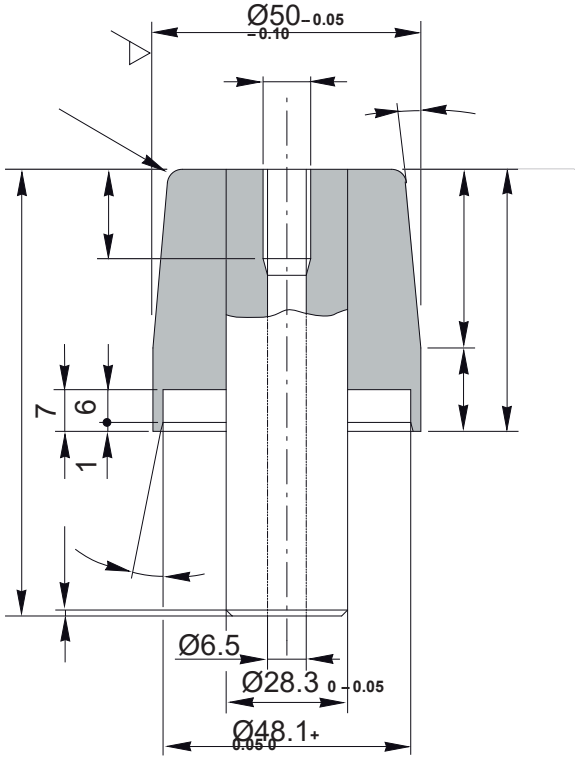

STEERING CYLINDER (HD VERSION)

WRENCH DIMENSIONS

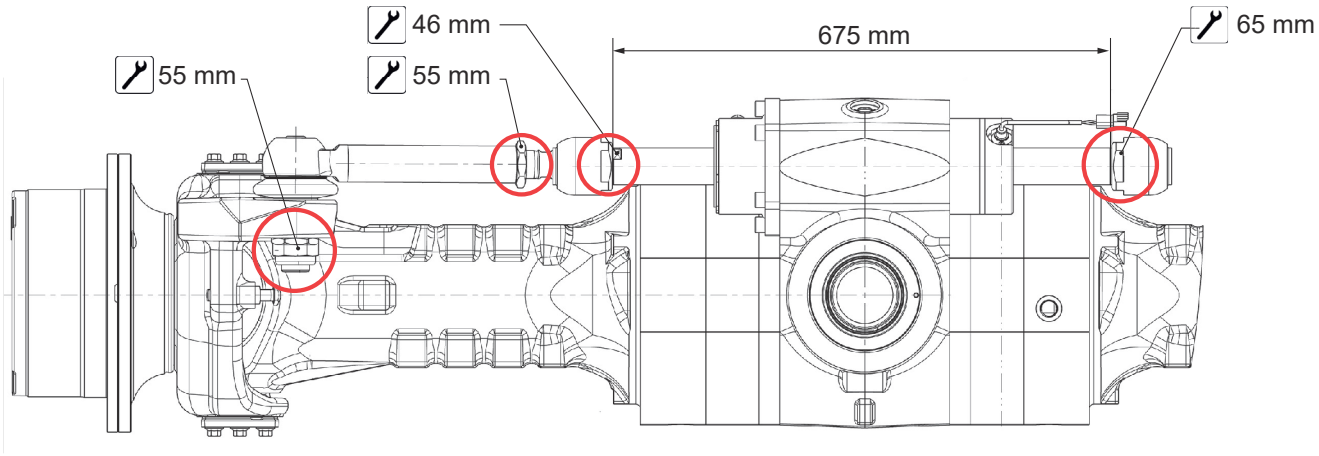

EXPLODED VIEW

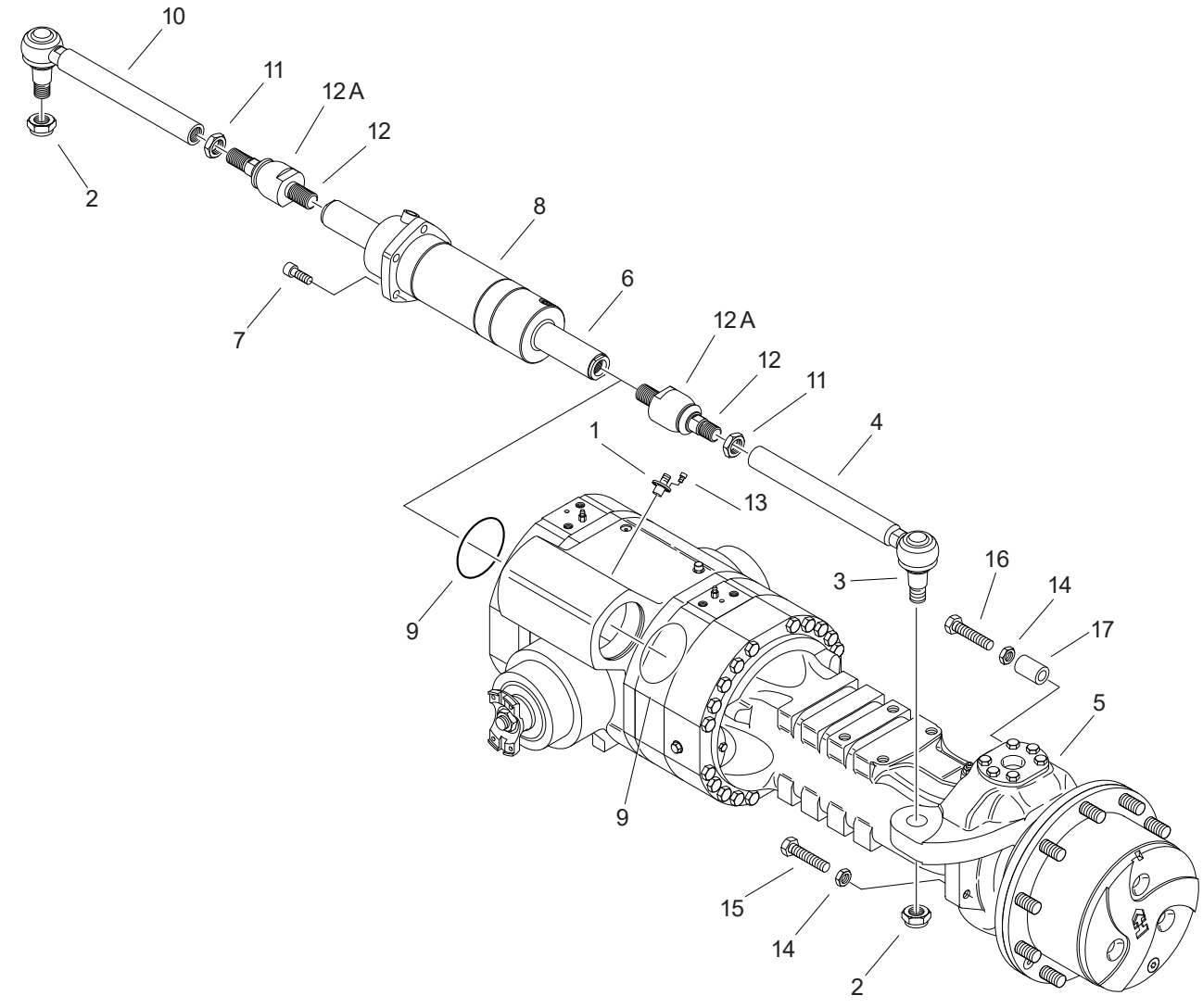

DISASSEMBLY

⚠CAUTION

Before draining oil, release the internal pressure, for details see OIL DRAINING MANDATORY PROCEDURE p. 14.

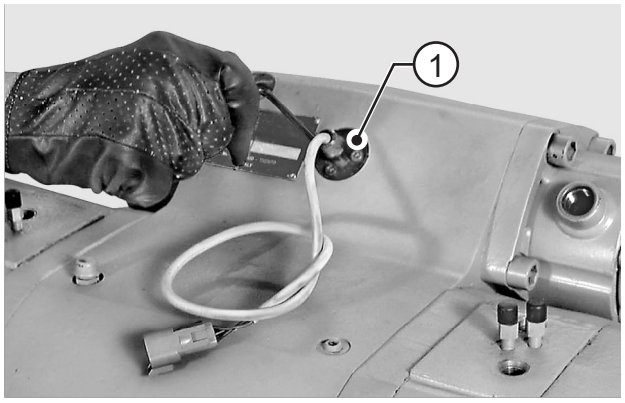

FIGURE 1: If required, remove the steering piston stroke centering sensor (1).

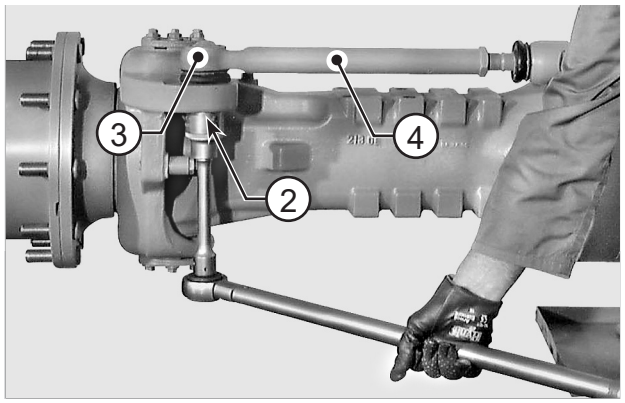

FIGURE 2: Loosen the check nuts (2) on the joints (3) of the steering bars (4) and remove nuts.

NOTE:

Should the joint rotate, hold it with a wrench inserted in the seat provided.

⚠CAUTION

The self-locking nuts (2) must be replaced once every 5 disassemblies.

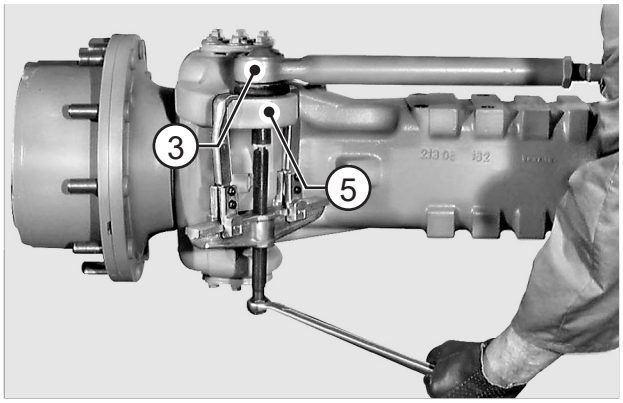

FIGURE 3: Using a puller, disconnect the tapered pins of the joints (3) from the steering cases (5).

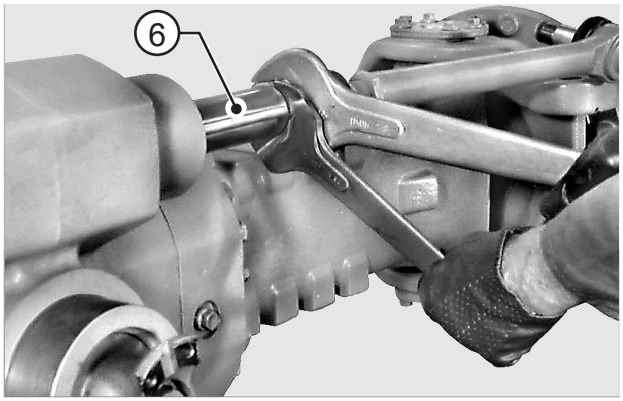

FIGURE 4: Disconnect left and right steering bars from piston (6).

⚠CAUTION

To ease bar removal, heat the threaded portion of the piston to approximately 212 °F [100 °C] with a heat gun.

⚠WARNING

Wear protective garments when handling hot objects.

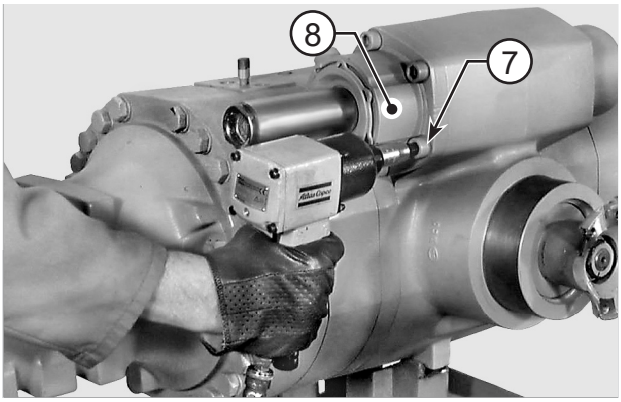

FIGURE 5: Loosen and remove the check screws (7) of steering cylinder (8).

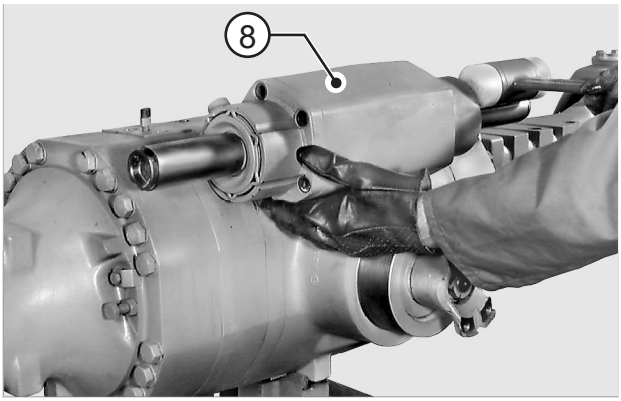

FIGURE 6: Extract the steering cylinder (8) using a plastic hammer.

NOTE:

For cylinder disassembly, see STEERING CYLINDER (STANDARD VERSION) p.79.

⚠CAUTION

Before attempting to disassemble the unit, drain the oil in the cylinder chambers completely.

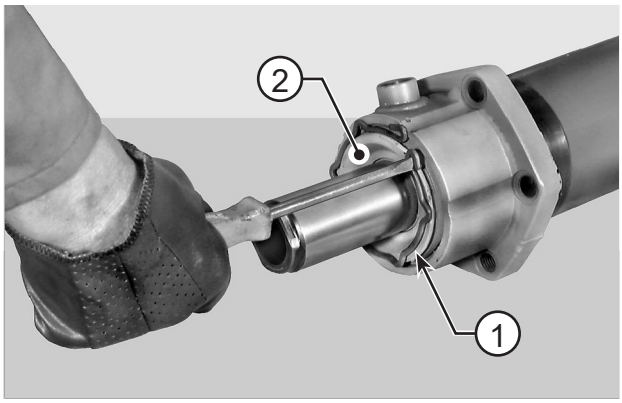

FIGURE 7: Using a screwdriver, remove the cylinder head (2) snap ring (1).

⚠WARNING

Removal of the snap rings can cause personal injuries. You must wear appropriate safety equipment. To avoid injury to eyes, wear eye protection equipment.

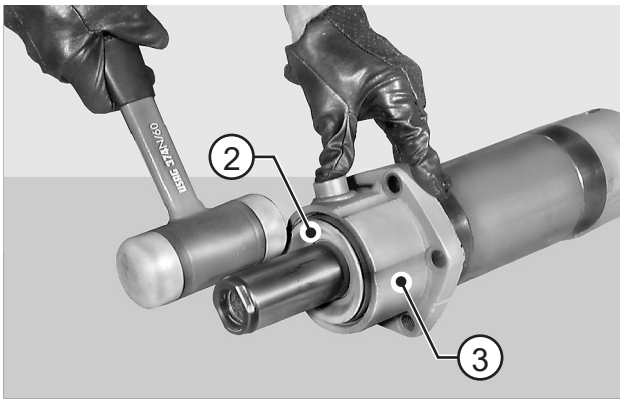

FIGURE 8: Lightly tap the cylinder head (2) with a plastic hammer to push it inside the cylinder (3).

NOTE:

Insert the cylinder head flush with the cylinder.

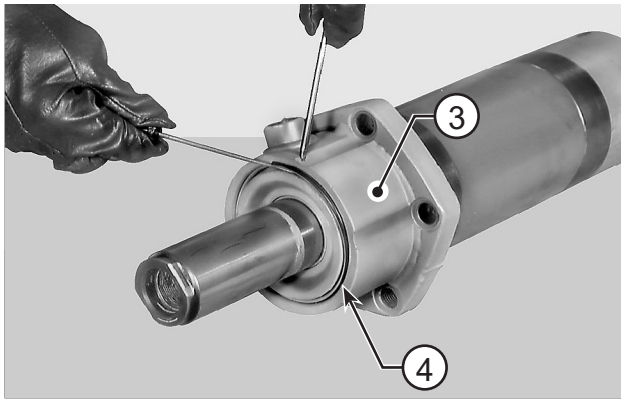

FIGURE 9: Using a punch, force the stop ring (4) located inside the cylinder (3) and extract ring using a screwdriver.

⚠WARNING

Removal of the snap rings can cause personal injuries. You must wear appropriate safety equipment. To avoid injury to eyes, wear eye protection equipment.

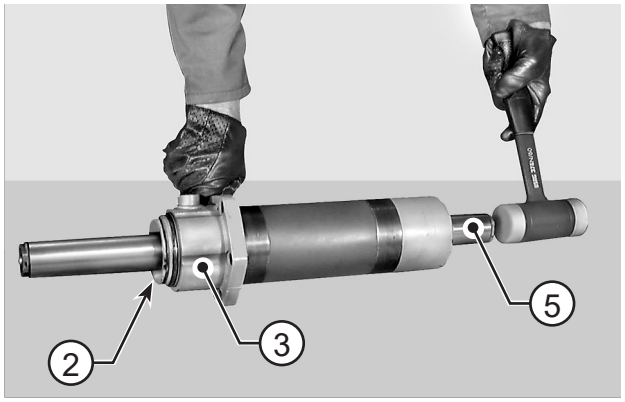

FIGURE 10: Using a plastic hammer, hammer the piston (5) so it strikes against the head (2).
Continue until the head (2) is ejected from the cylinder (3).

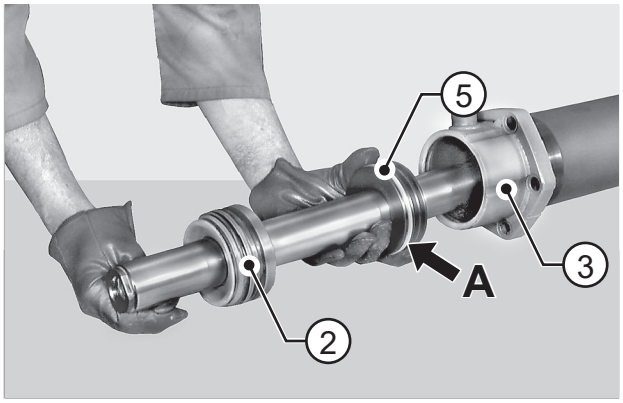

FIGURE 11: Take the cylinder unit (3) apart by extracting the head (2) first, followed by the piston (5). Remove all seals, anti-extrusion rings, and scraper rings from head (2), cylinder (3), and piston (5).

⚠CAUTION

During disassembly document the direction of seal ring "A" on the piston (5) as some models are assembled differently.

NOTE:

1 - All seals must be replaced at each disassembly.
2 - Pay particular attention not to damage seal seats and piston beds.

ASSEMBLY

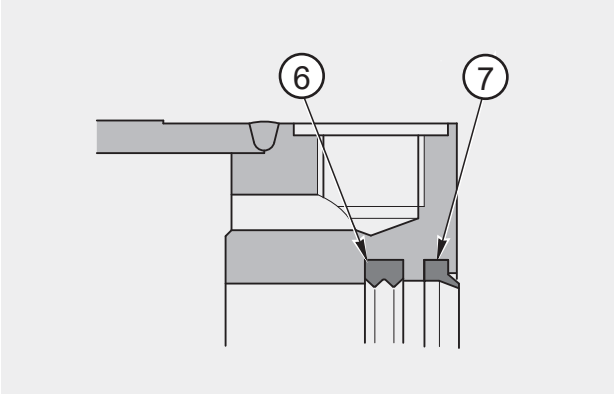

FIGURE 12: Grease and install the piston rod seal ring (6) and scraper ring (7) into cylinder (3).

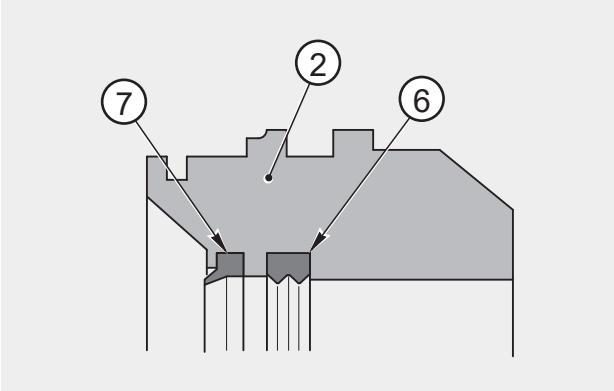

FIGURE 13: Grease and install the piston rod seal ring (6) and scraper ring (7) into the head (2).

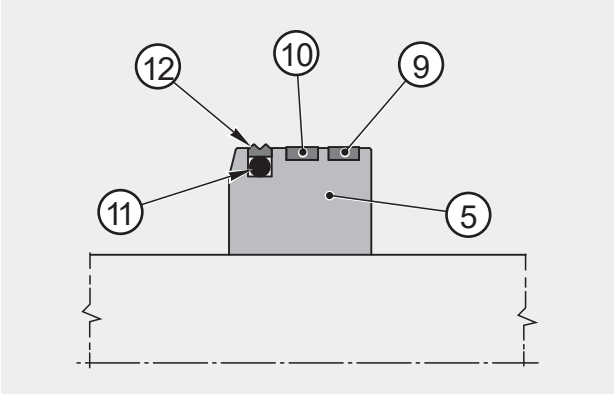

FIGURE 14: Fit seal (8) on the outside of the head (2).

⚠CAUTION

1 - To ease installation, grease the outer surface of the piston.
2 - Do not roll the seal (8).

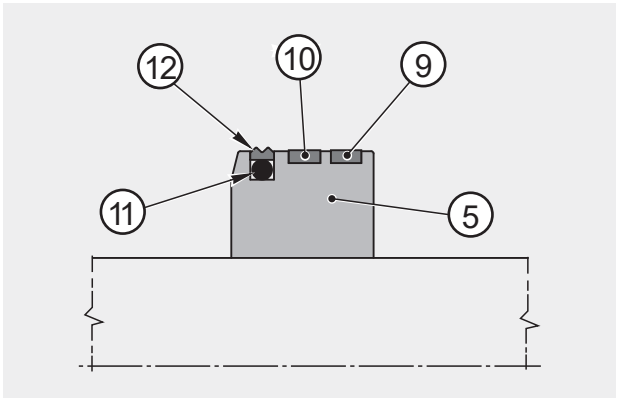

FIGURE 15: Prepare piston (5) by fitting it with guide ring (9), magnetic ring (10), o-ring (11), and seal (12).

⚠CAUTION

1 - To ease installation, lubricate with grease.
2- If a centring sensor is not required, the magnetic ring (10) can be replaced with an additional guide ring (9).

F
m

F
o
in

I

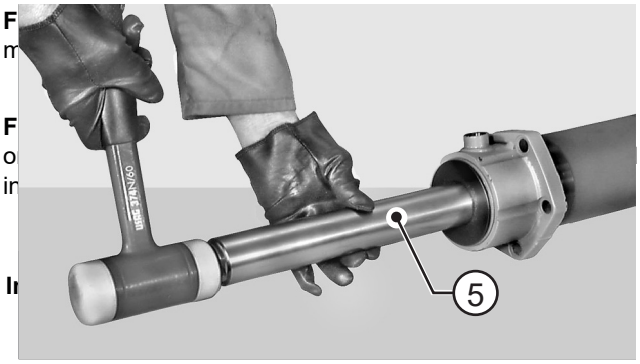

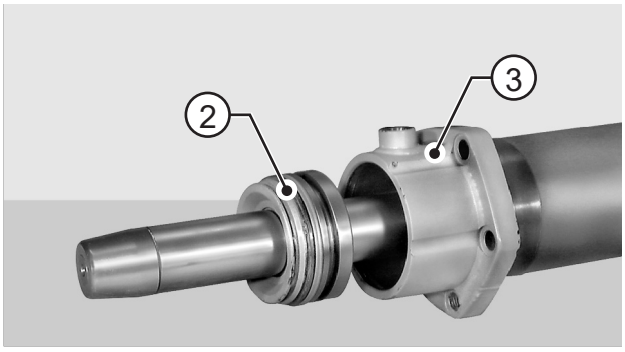

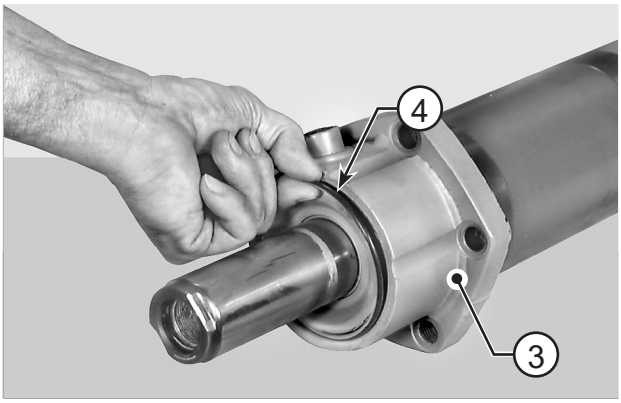

FIGURE 18: Install the stop ring (4) and ensure that it sets in the seat of cylinder (3).

⚠WARNING

Personal injury can result when installing snap ring. The appropriate safety equipment must be worn. To avoid injury to your eyes, wear protective glasses during this procedure.

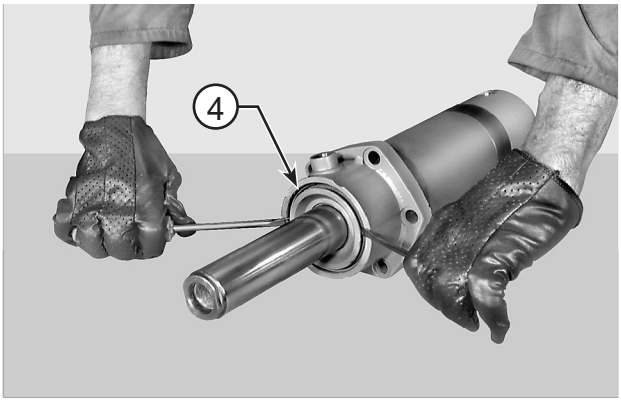

FIGURE 19: Using two screwdrivers or levers, force the head until it is seated against the stop ring (4).

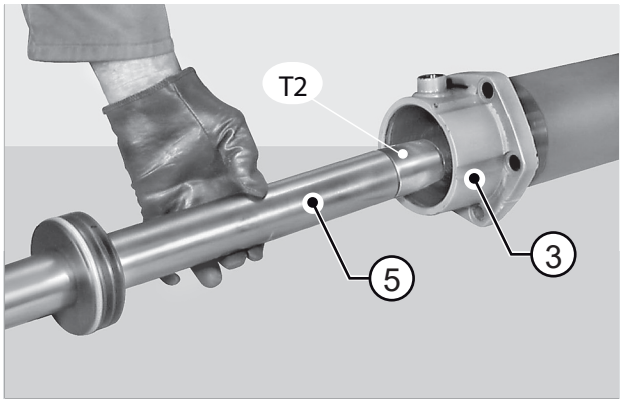

FIGURE 20: Apply tool T2 (See drawing T2 p. 90) to the piston rod on non-head side (2) and center rod into cylinder (3) to fit it into piston (5).

NOTE:

Lightly grease seals and cylinder.

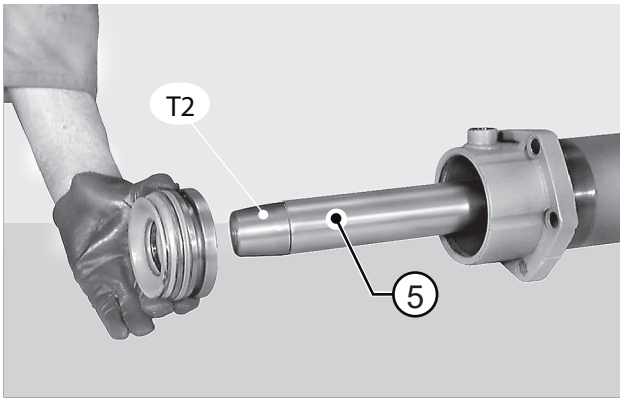

FIGURE 21: Remove tool T2 (See drawing T2 p. 90) and apply it to the opposite side of the piston (5).

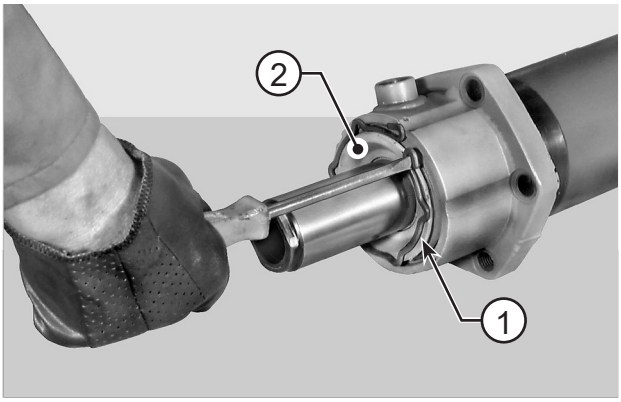

FIGURE 22: Install the snap ring (1) of head (2). If necessary, force it into the seat with a punch and hammer.

⚠CAUTION

MANDATORY PROCEDURE

Set the pliers following the correct procedure shown in END-STOP PLIER SETTING p. 15.

⚠WARNING

Personal injury can result when installing snap ring. The appropriate safety equipment must be worn. To avoid injury to your eyes, wear protective glasses during this procedure.

⚠CAUTION

Make sure the snap ring (1) fits snugly in its seat.

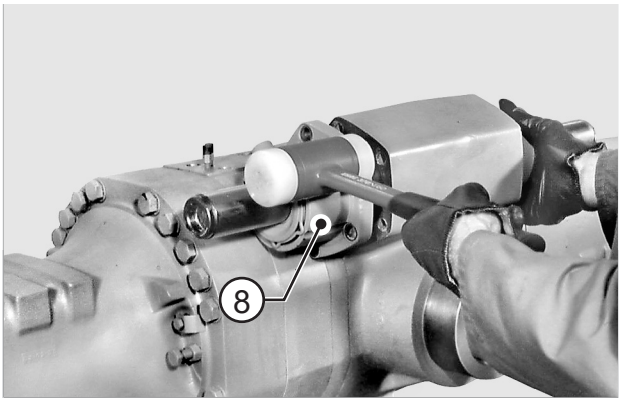

FIGURE 23: Check the condition of the axle unit's o-rings (9). Grease piston seats with Tecnolube Seal 101 and install cylinder using a plastic hammer.

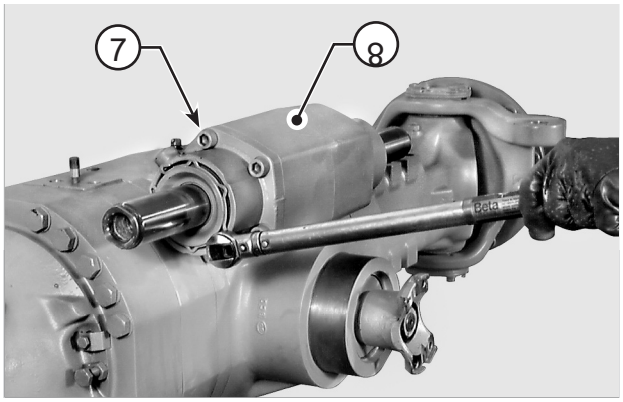

FIGURE 24: Block cylinder (8) with screws (7) coated with Loctite 242 and tighten to 180 - 200 N·m.

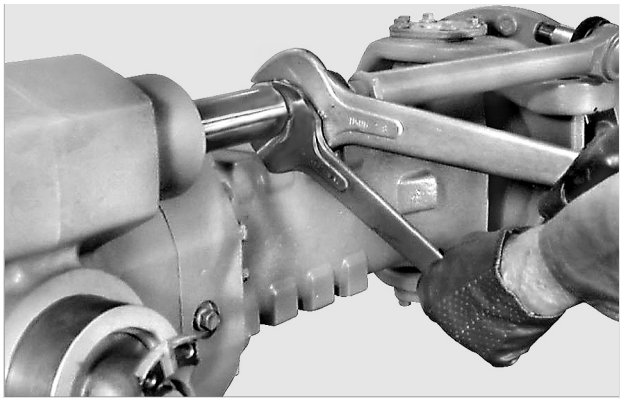

FIGURE 25: Apply Loctite 242 to the threaded portion of the steering bars and connect the bars by tightening the ends in the piston rod. Tightening torque: 940 - 1040 N·m.

⚠CAUTION

Remove grease from the threads using an activator before applying the thread locking compound.

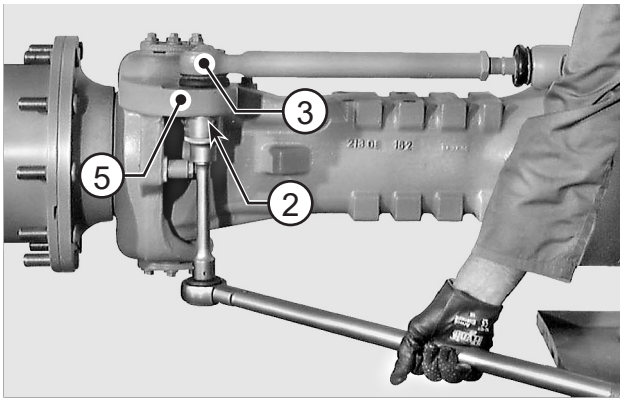

FIGURE 26: Introduce the pins (3) in the steering cases (5) and lock into position with nuts (2) tightened to a torque of 710 - 780 N·m.

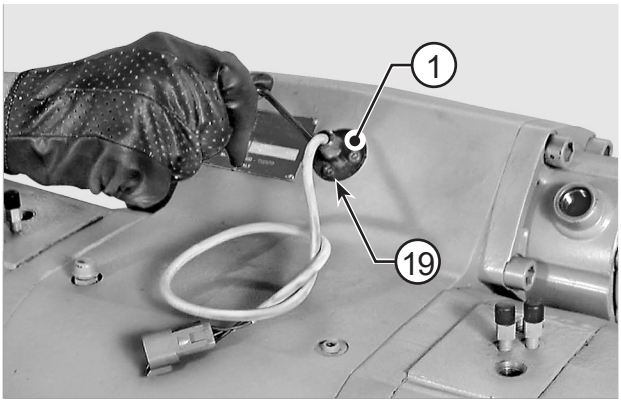

FIGURE 27: If required, install the steering piston stroke centering sensor (1) and tighten screws (13) to 5 - 6 N·m

⚠CAUTION

If required, eliminate the action of the negative brake.

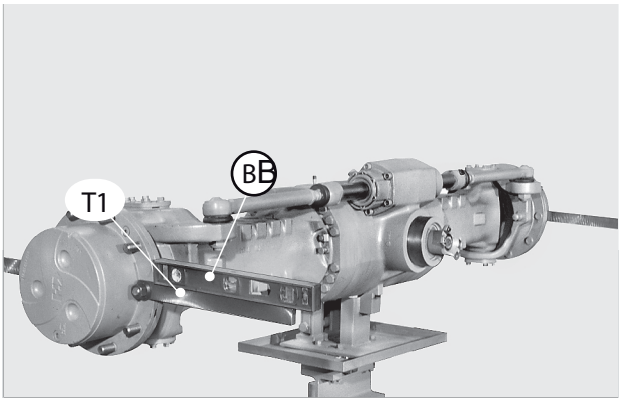

FIGURE 28: Apply tools T1 (See drawing T1 p. 90) onto the wheel hubs and lock tools.
Check that tools are perfectly flat and parallel to each other using a level "B".

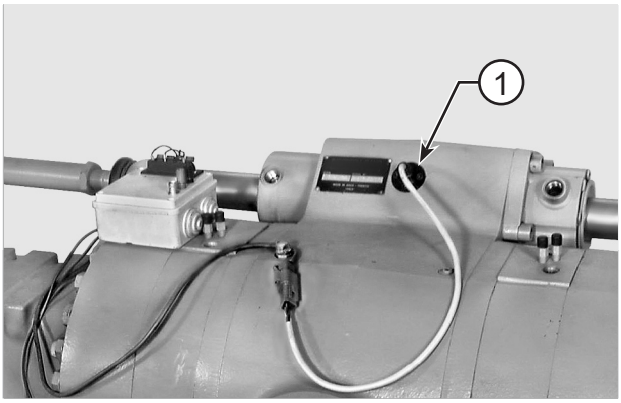

FIGURE 29: Connect the sensor (1) to the control device according to either of the following diagrams.

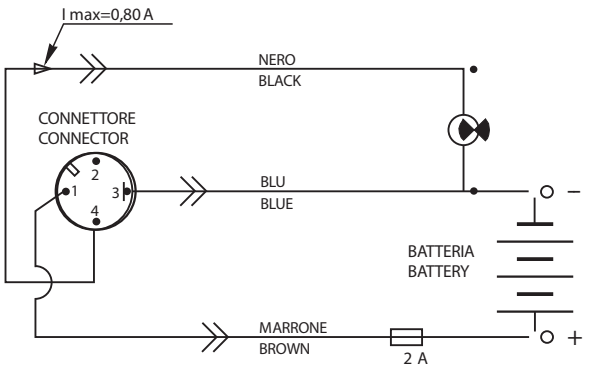

FIGURE 30: Sensor wiring diagram for STANDARD version.

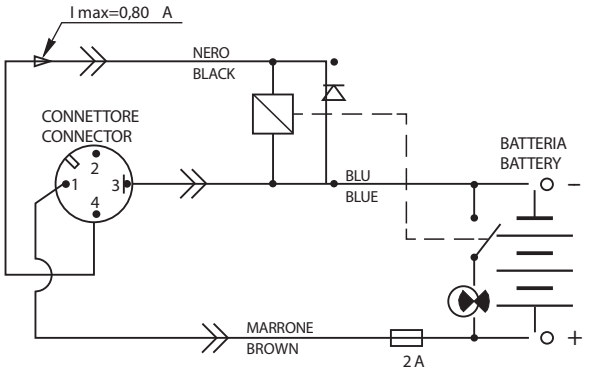

FIGURE 31: Sensor wiring diagram for OPTIONAL version.

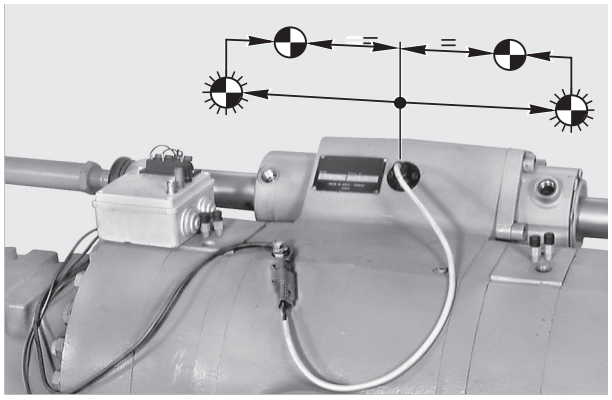

FIGURE 32: Center by slowly moving the piston first in one direction, then in the opposite one. Position the piston in the middle point of the stroke, which is determined by the control device signalling lamp turning on and switching off in the reverse stage.

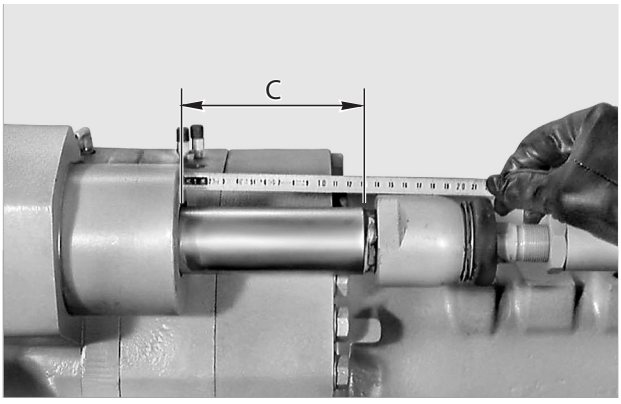

FIGURE 33: Check distance "C" of piston on either of the two sides and write down distance dimension to check subsequent adjustments.

NOTE:

For cylinders without sensors, piston must be centered based on maximum stroke.

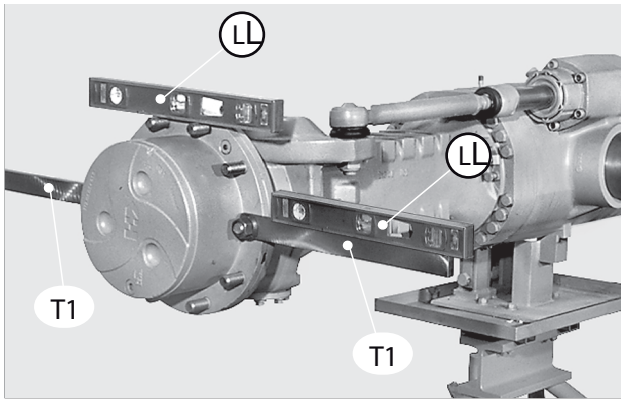

FIGURE 34: Lay level "L" on two upper studs and line them up. Apply tools T1 (See drawing T1 p. 90) to the two horizontal studs; hold them in position with two nuts, level them, and finally lock into position.

⚠CAUTION

Make sure that tools T1 (See drawing T1 p. 90) perfectly adhere to wheel face.

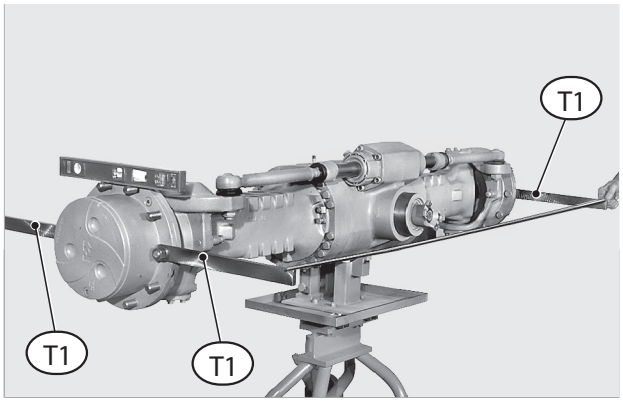

FIGURE 35: Without moving the piston, check front “B” and rear “A” using tool T1 (See drawing T1 p. 90) at “R” value. R = 400 mm (see picture below).

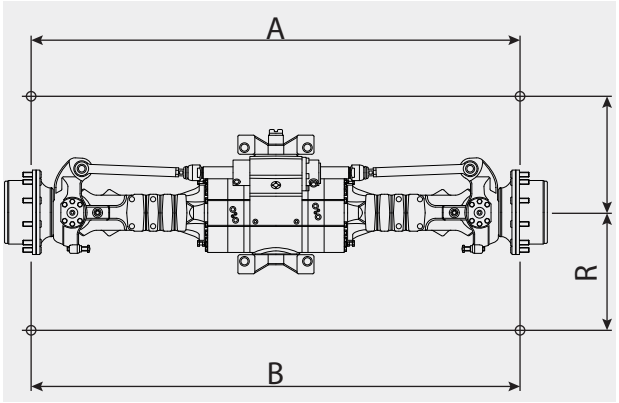

FIGURE 36: Adjust the convergence with a difference between “A” and “B” of maximum 2,5 mm.
A ± B = 2,5 mm
R = 400 mm

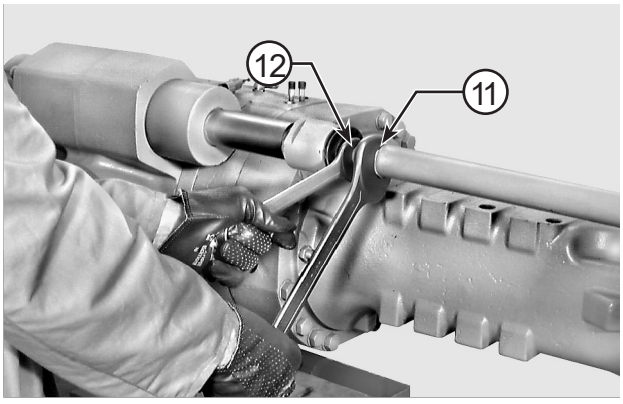

FIGURE 37: TOE-IN If necessary, adjust alignment after loosening the check nuts (11) of ball pins (12).

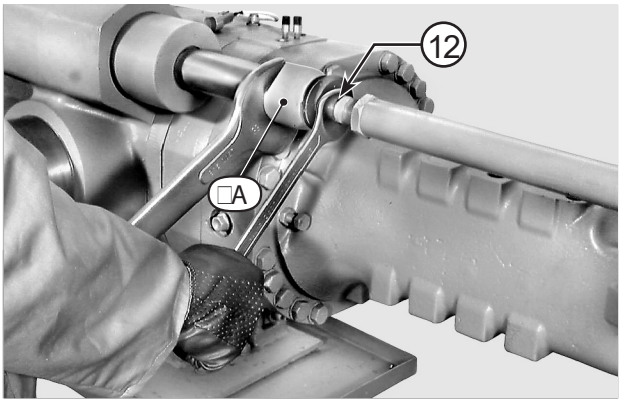

FIGURE 38: Hold joints (12A) tight and rotate the ball pins (12) until tools T1 (See drawing T1 p. 90) become parallel to

NOTE:

1 - Loosen the nuts by a few turns.
2 - Half a turn of the pin will reduce the front distance by about 3 mm and increase the rear one by about 3 mm.

F
T

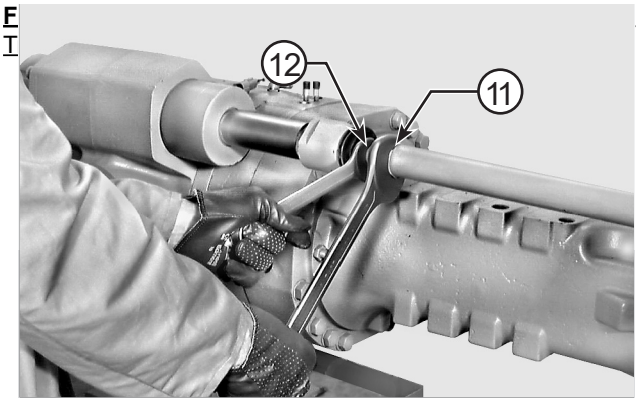

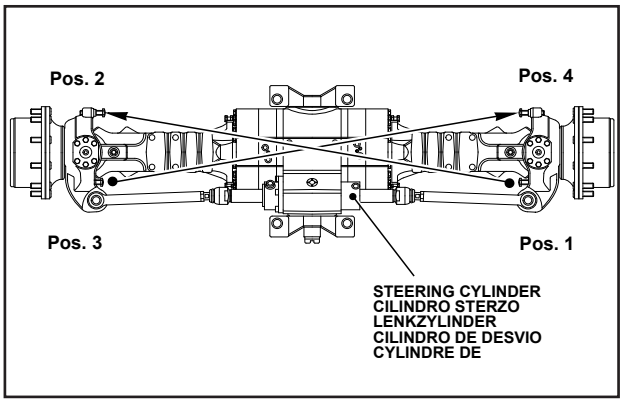

FIGURE 40: ADJUSTING THE STEERING
Loosen the nut of one of the adjusting screws on cylinder side.

NOTE:

Perform the same operations on both sides (see diagram).

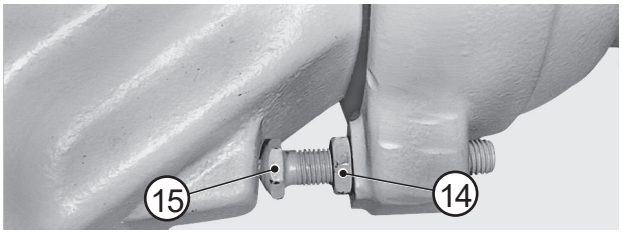

FIGURE 41: Adjust the distance of the screw (15) according to required data setting.
Lock into position with nut (14) tightened to 145 - 148 N·m.

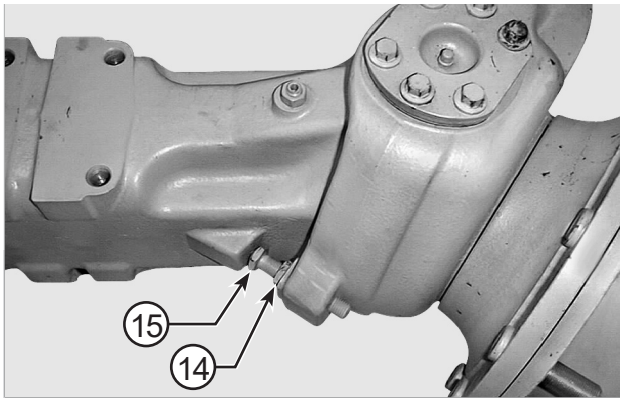

FIGURE 42: Perform one full steering operation until the adjusted screw (15) leans against the arm stop.

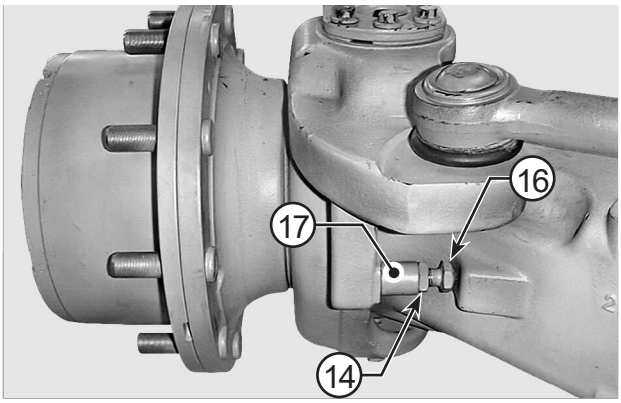

FIGURE 43: While holding the adjustment screw in position against the arm stop, adjust the screw opposite (16), on non-cylinder side, until it leans against the arm stop.

⚠CAUTION

The screws (15, 16) must lean against the respective arm stops all at the same time.

SPECIAL TOOLS

T1

P/N: 2367

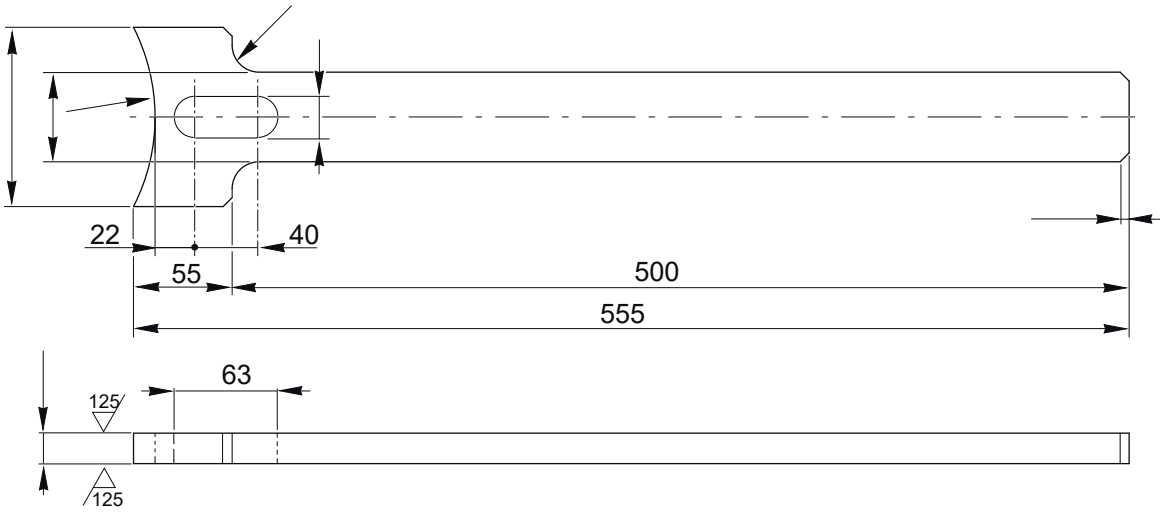

T2

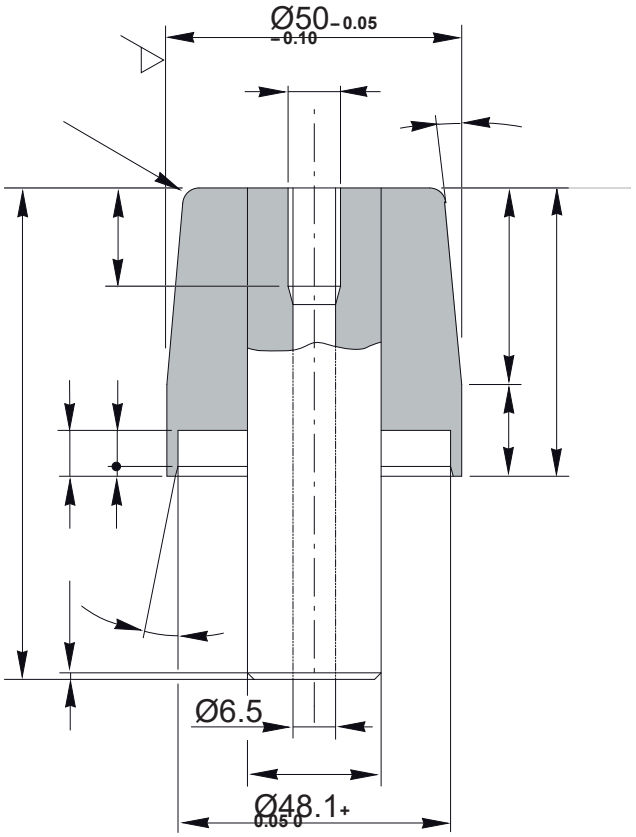

DIFFERENTIAL UNIT

EXPLODED VIEW

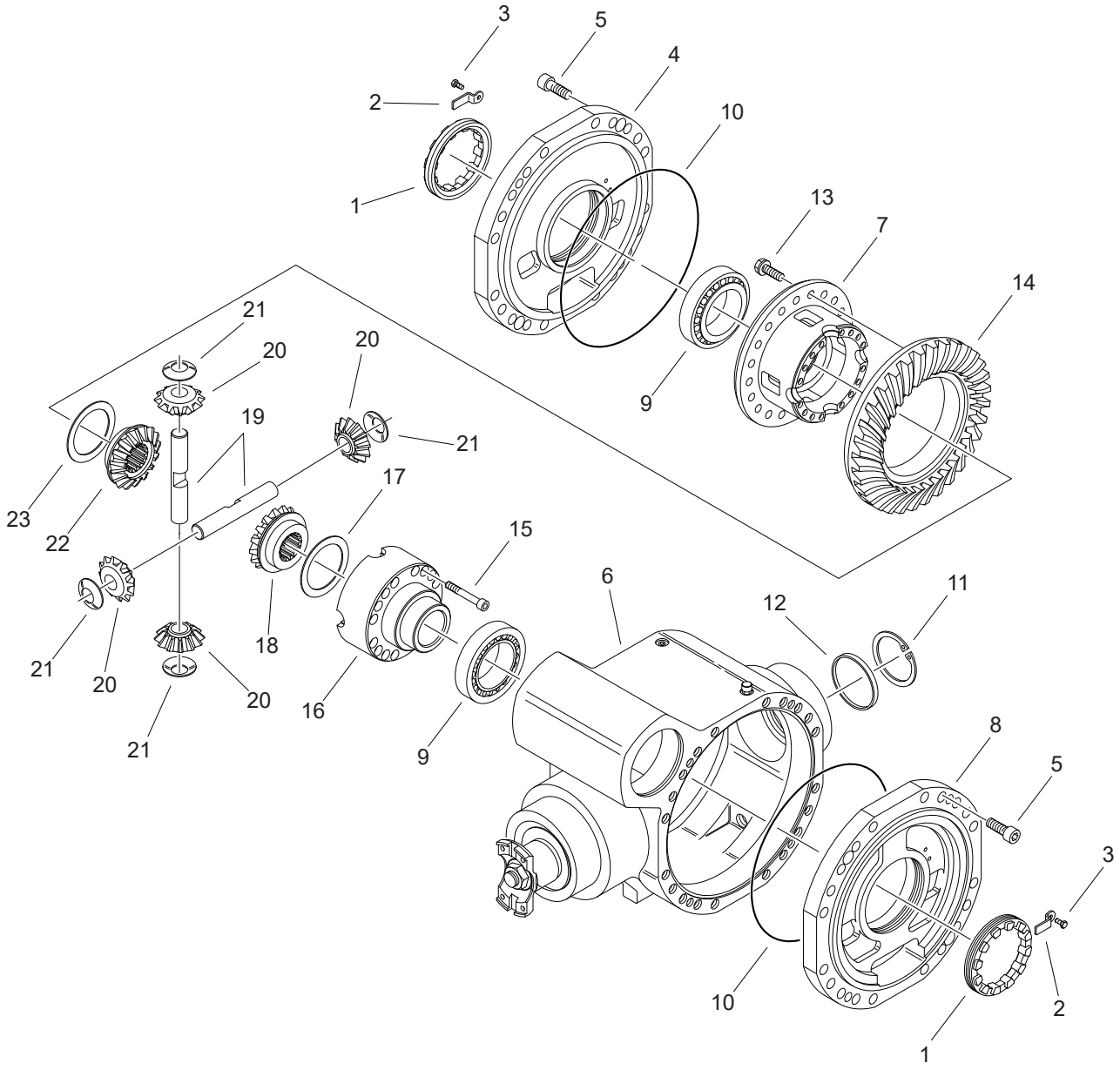

DISASSEMBLY

⚠CAUTION

Before draining oil, release the internal pressure, for details see OIL DRAINING MANDATORY PROCEDURE p. 14.

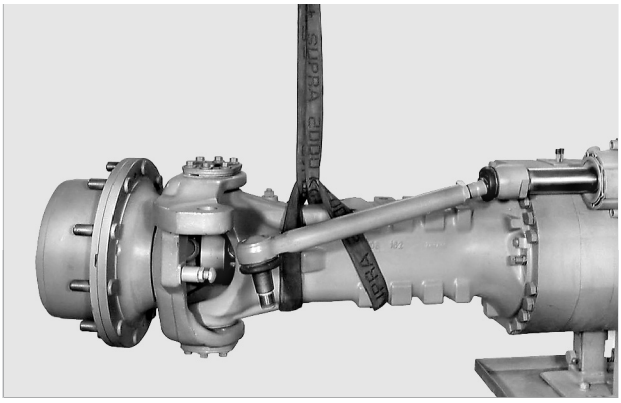

FIGURE 1: Remove the entire arms and negative brake cylinders. For details, see BRAKE WEAR CHECK PROCEDURE p. 21.

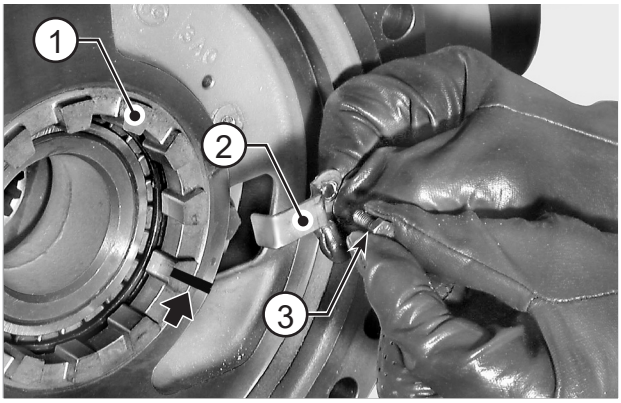

FIGURE 2: Only if removing or adjusting is needed, mark the position of the ring nuts (1).
Remove screws (3) and ring nut checks (2).

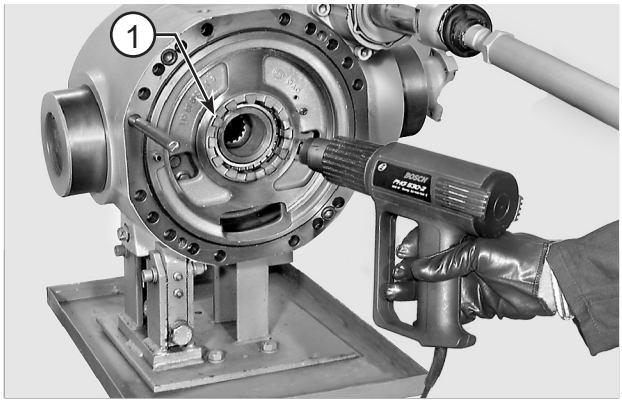

FIGURE 3: Only if removing or adjusting is needed, heat the ring nuts (1) uniformly to a temperature of about 176 °F [80 °C].

⚠WARNING

Wear protective garments when handling hot objects.

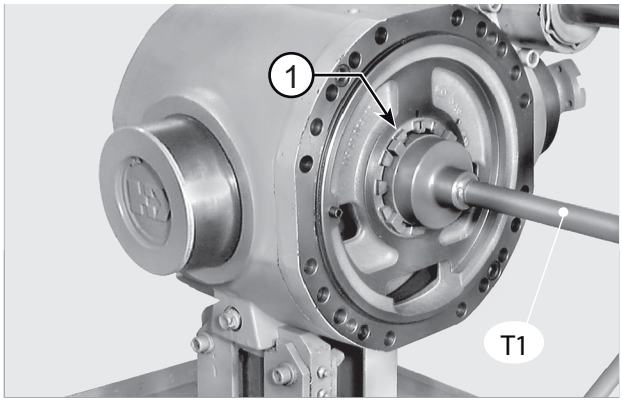

FIGURE 4: Only if removing or adjusting is needed, use tool T1 (See drawing T1 p. 113) to loosen and remove the ring nuts (1).

NOTE:

Remove any trace of sealant from the ring nuts threads and intermediate covers.

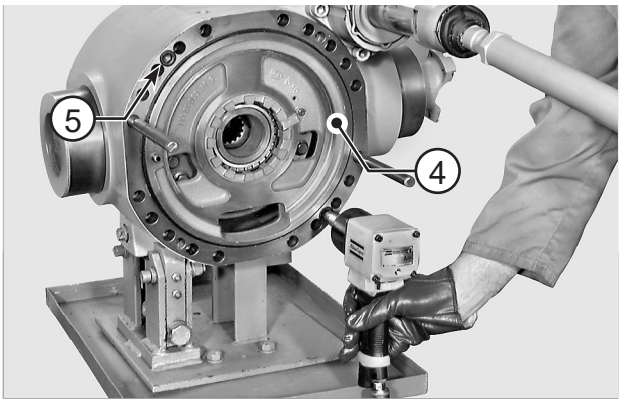

FIGURE 5: Tighten two safety M16 studs in the main body. Loosen and remove the check screws (5) of intermediate cover (4) on ring gear side.

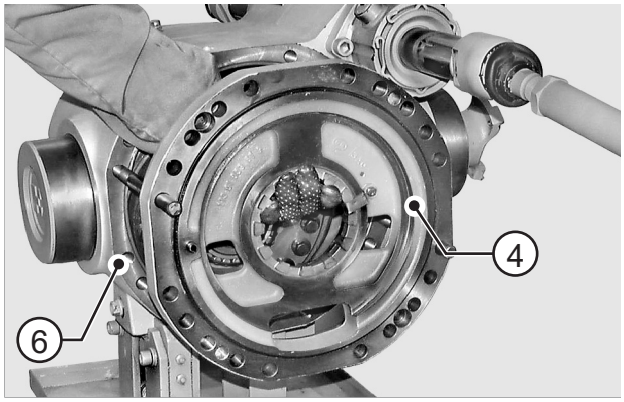

FIGURE 6: Support the differential unit and separate the intermediate cover (4) from the main body (6). Remove cover (4).

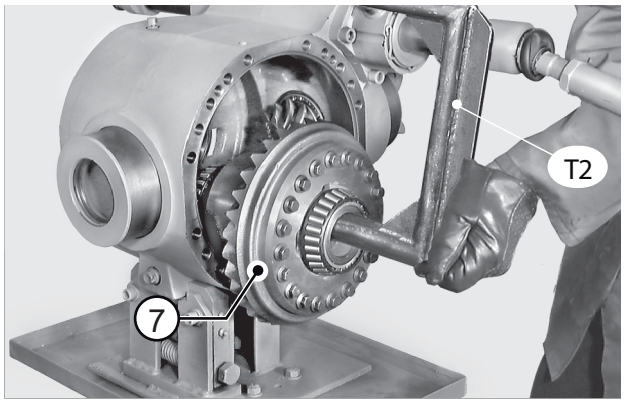

FIGURE 7: Remove the differential unit (7) and place it on a workbench.

NOTE:

Use the tool T2 (See drawing T2 p. 114) to ease removal.

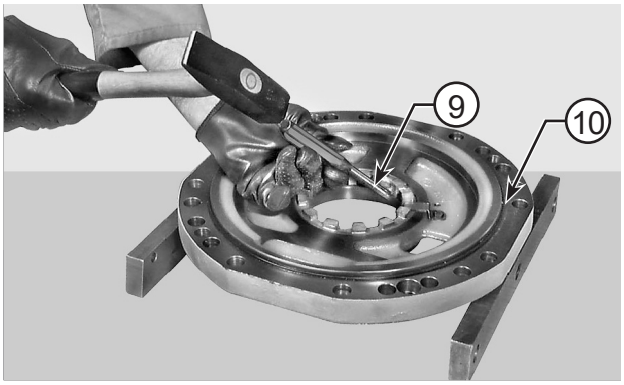

FIGURE 8: If bearings need replacing, remove the outer thrust blocks of bearings (9) from intermediate covers (4, 8).

NOTE:

Carefully check the o-rings (10).

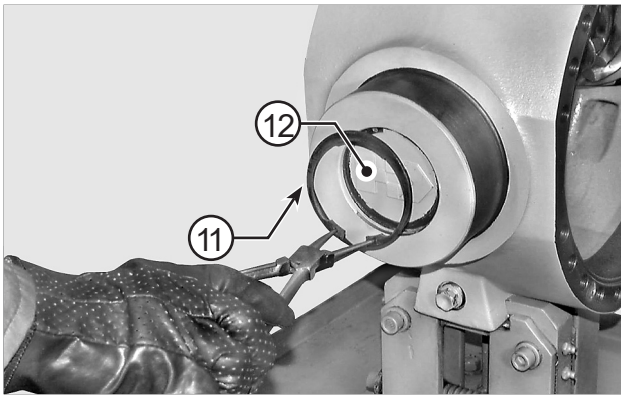

FIGURE 9: Remove snap ring (11) and cap (12).

⚠CAUTION

MANDATORY PROCEDURE

Set the pliers following the correct procedure shown in END-STOP PLIER SETTING p. 15.

⚠WARNING

Removal of the snap rings can cause personal injuries. You must wear appropriate safety equipment. To avoid injury to eyes, wear eye protection equipment.

NOTE:

Replace cap at each disassembly.

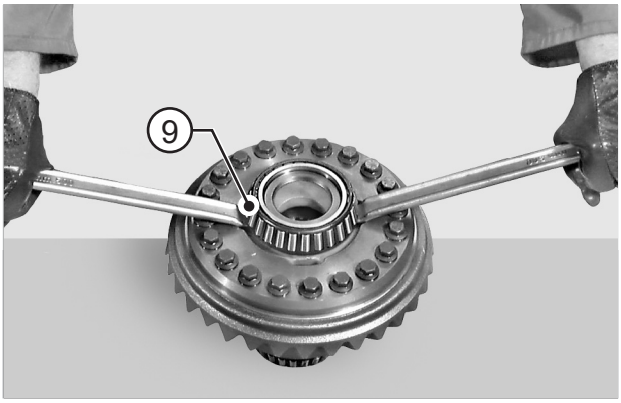

FIGURE 10: DISASSEMBLY
Using two levers, lift bearing (9) on ring gear side by about 8 mm.

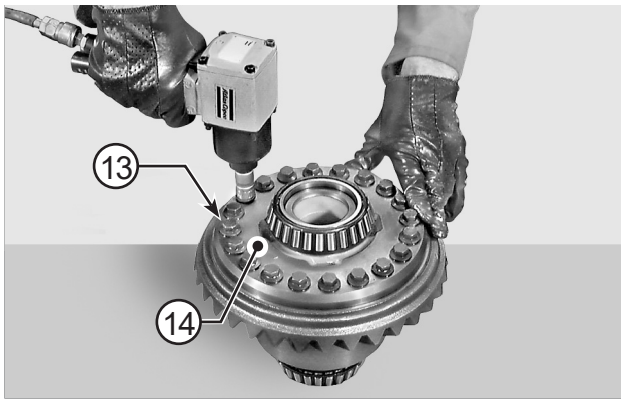

FIGURE 11: Loosen and remove the check screws (13) of ring gear (14).

NOTE:

The screws must be replaced at each disassembly.

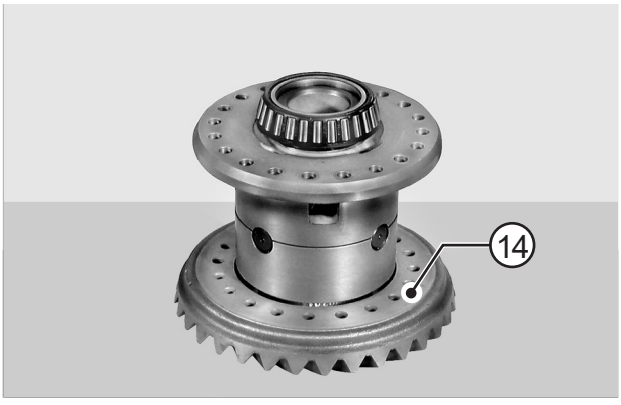

FIGURE 12: Remove the ring gear (14).

NOTE:

If necessary, use a plastic hammer.

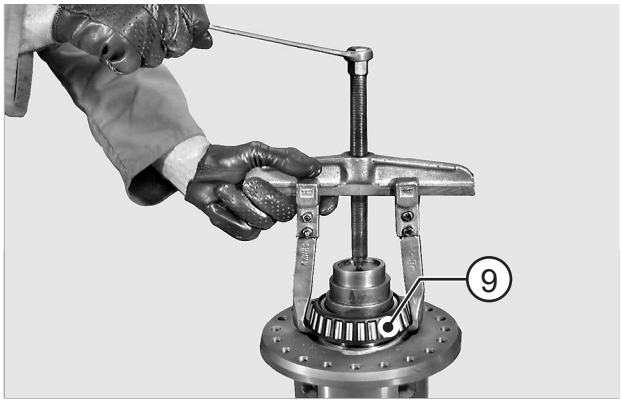

FIGURE 13: Using a puller, remove bearings from ring gear (9) side.

NOTE:

Fit puller in connection with the slots provided.

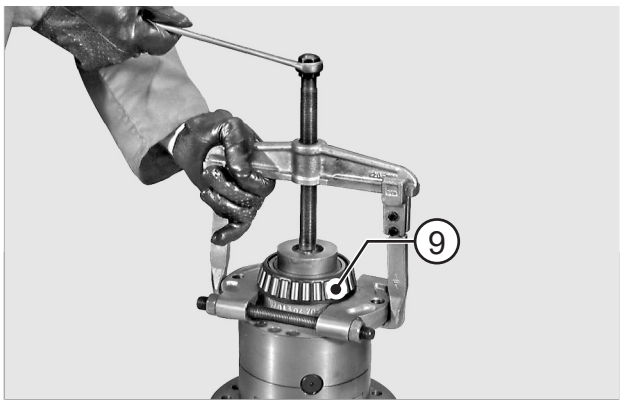

FIGURE 14: Using a separator and a puller, remove bearing from non-ring gear side.

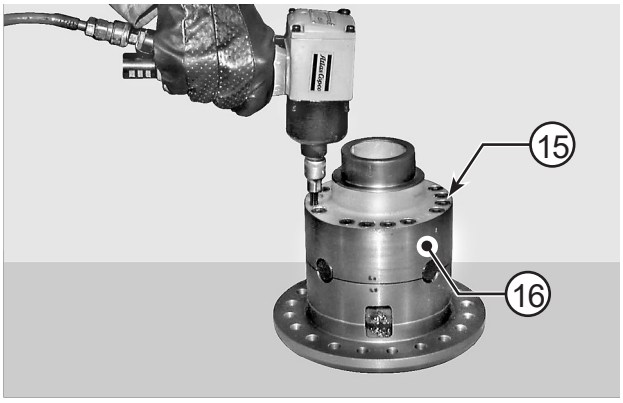

FIGURE 15: Loosen and remove check screws (15) from differential box (16).

NOTE:

The screws must be replaced at each disassembly.

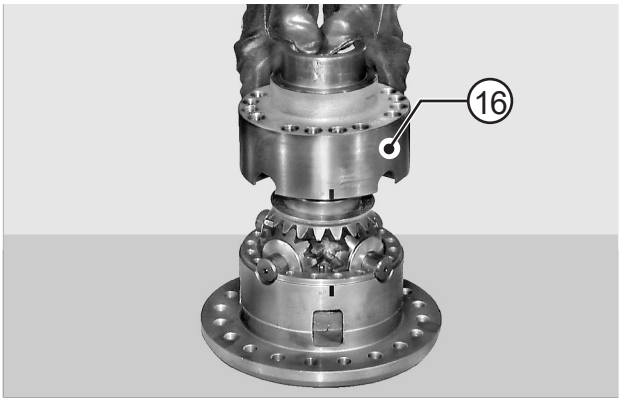

FIGURE 16: Remove the half-box (16).

⚠CAUTION

Mark reference marks for joining the two halves.

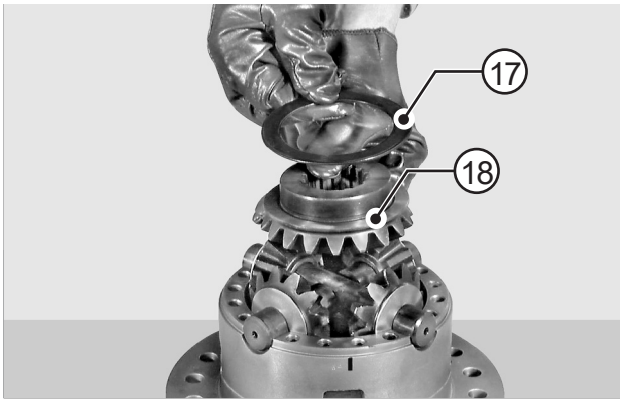

FIGURE 17: Remove shoulder (17) and first planetary gear (18).

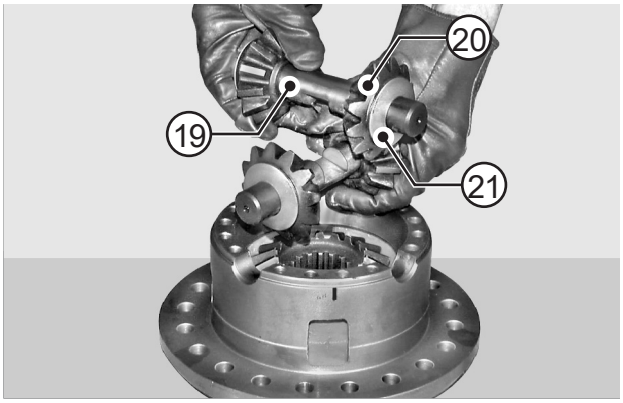

FIGURE 18: Remove shafts (19), complete with planetary gears (20) and spherical shoulder washers (21).

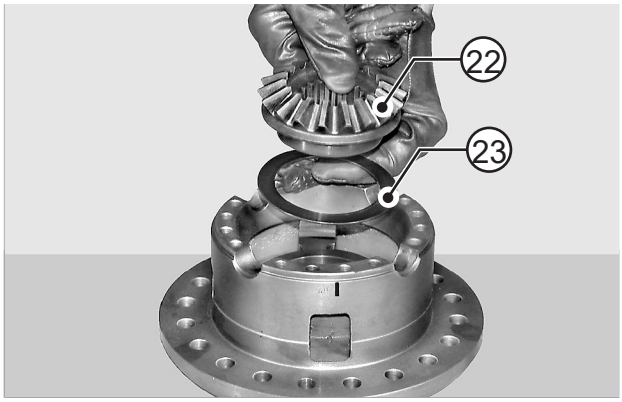

FIGURE 19: Remove the 2nd planetary gear (22) and shoulder ring (23).

ASSEMBLY

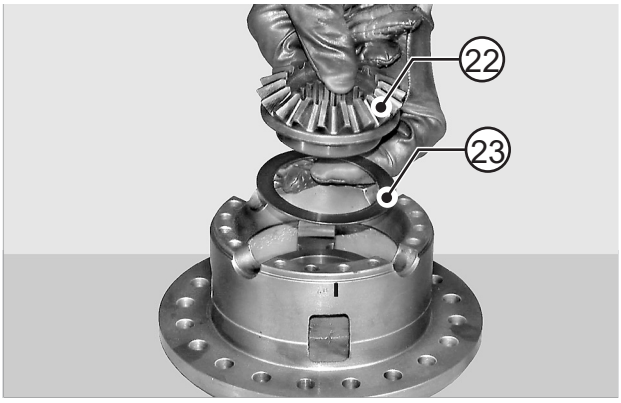

FIGURE 20: ASSEMBLY
Install the shoulder ring (23) and planetary gear (22) into the half-box (7).

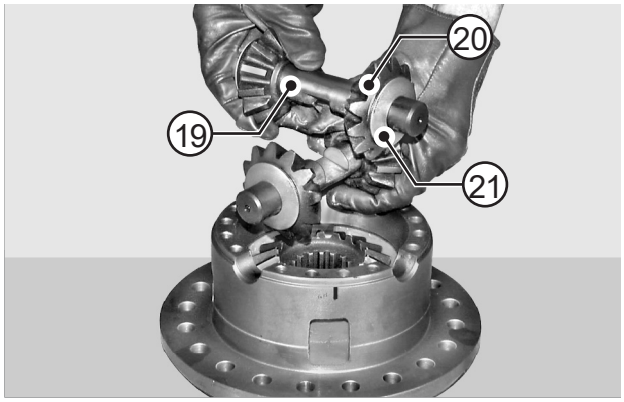

FIGURE 21: Install the planetary gears (20) and spherical shoulder washers (21) onto the shafts (19). Install the assemblies in the half-box (7).

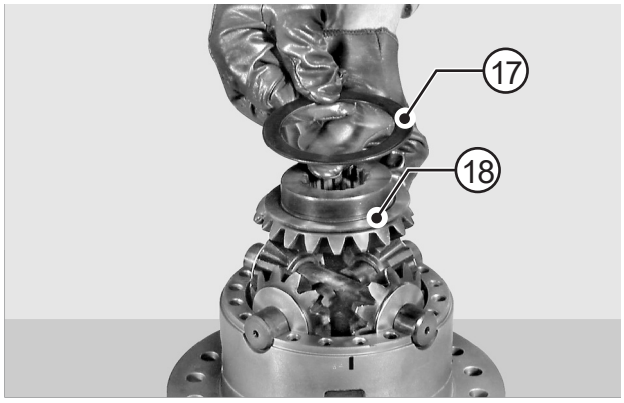

FIGURE 22: Install the planetary gear (18) and shoulder ring (17).

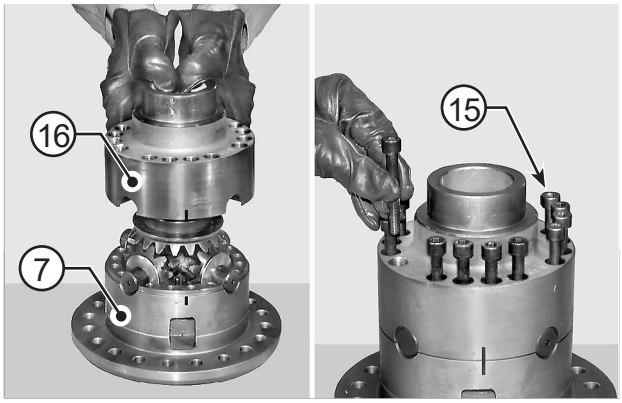

FIGURE 23: Mount the locking half-box (16) onto the half-box (7) and lock it with screws (15) coated with Loctite 270. Tighten temporarily by hand.

⚠CAUTION

1 - The match marks on the two half-boxes must correspond.
2- Use only new screws.

F
d
h

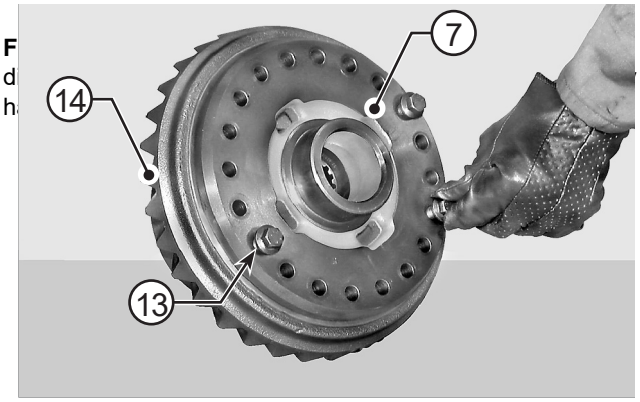

⚠CAUTION

Use only new screws.

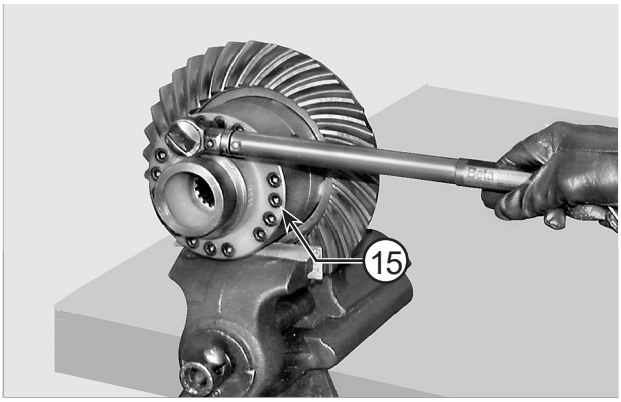

FIGURE 25: Fit the complete differential unit in a vice and tighten the screws (15) holding the two half boxes together to a torque of 71.5 - 78.5 N·m.

⚠CAUTION

Tighten screws using the criss-cross method.

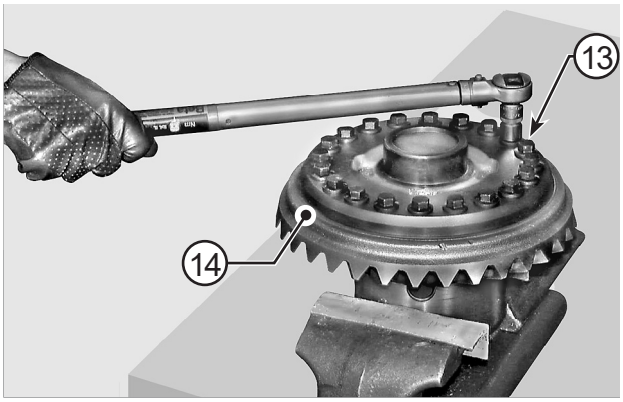

FIGURE 26: Lock the ring gear (14) by tightening the screws (13) to a torque of 115 - 142 N·m.

⚠CAUTION

Tighten screws using the criss-cross method.

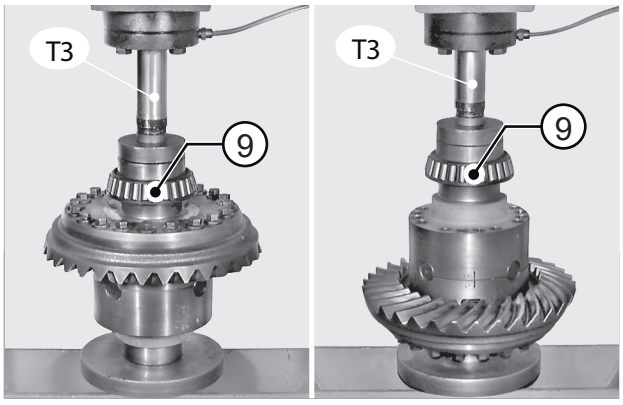

FIGURE 27: Position the differential unit under a press and fit it with bearings (9) using tool T3 (See drawing T3 p. 114).

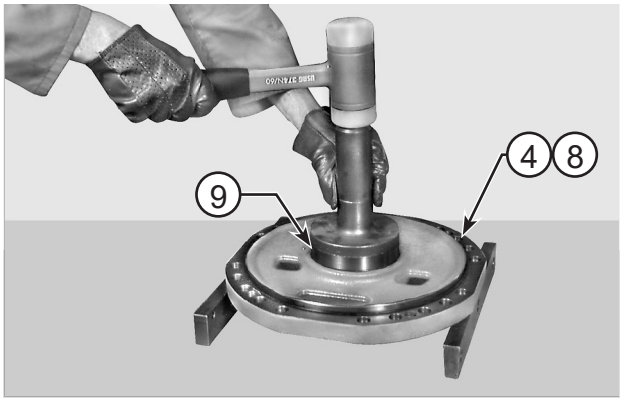

FIGURE 28: INSTALLATION
If bearings (9) are replaced, introduce the thrust blocks into intermediate covers (4, 8).

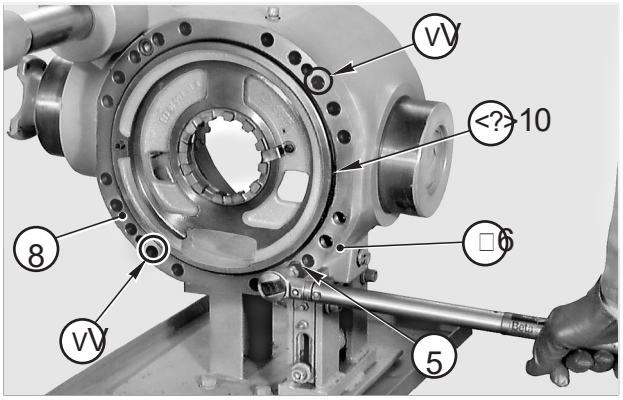

FIGURE 29: Fit the non-ring gear side of main body (6) complete of pinion with intermediate cover (8). Lock cover with screws (5) coated with Loctite 242 and with two service screws "V" (M16X50) tightened to a torque of 130 - 143 N·m.

NOTE:

Check the condition of the o-ring (10).

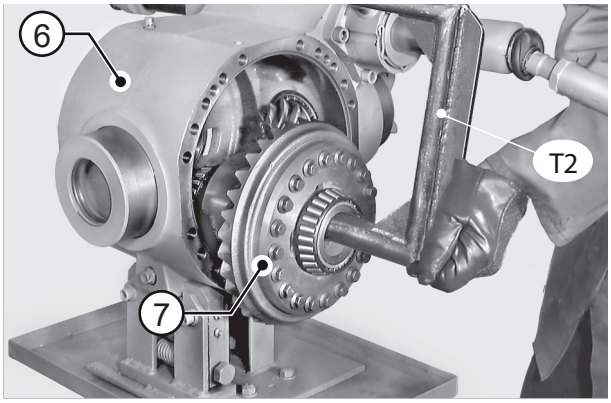

FIGURE 30: Using tool T2 (See drawing T2 p. 114), position the differential unit (7) into the main body (6).

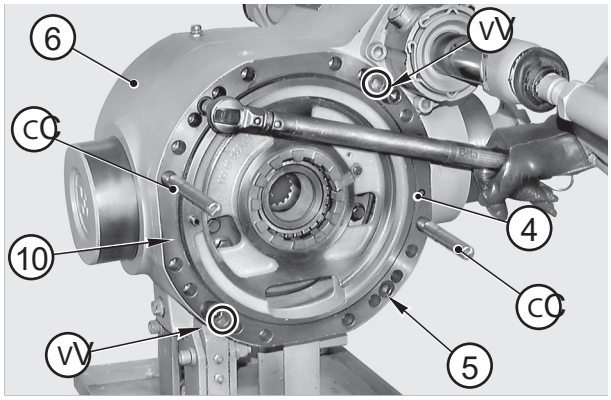

FIGURE 31: Tighten the two safety studs "C" into the main body (6) and install the intermediate cover (4). Lock into position with screws (5) treated with Loctite 242 and two service screws "V" (M16X50) to a torque of 130 - 143 N·m.

NOTE:

Check the condition of o-ring (10).

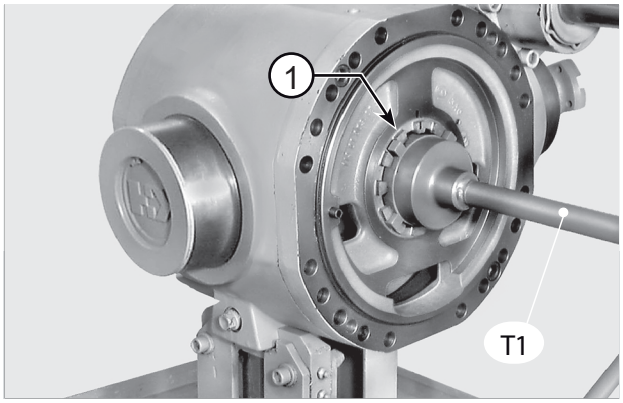

FIGURE 32: Only if the differential clearance and preload adjustment ring nuts have been removed, tighten the ring nuts (1) by 3 turns approximately. Coat with Loctite 222 and tighten in the relative intermediate covers. Tighten the ring nut (1) on ring gear side until clearances between pinion and ring gear are zeroed. Then, loosen by about 1/4 - 1/2 turn.

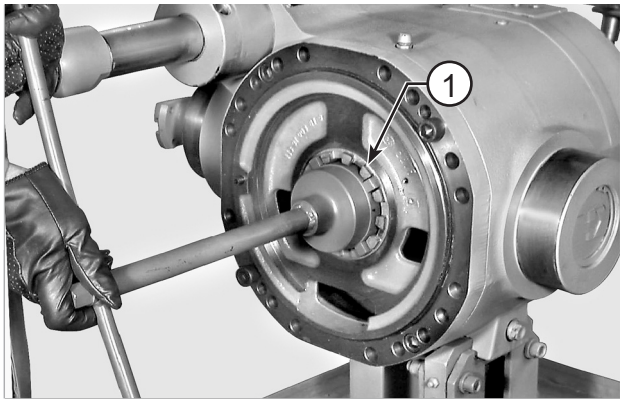

FIGURE 33: Only if ring nuts have been removed, preload bearings with ring nut (1) on non-ring gear side in order to increase the torque of the pinion.

⚠CAUTION

In the case of used bearings, check thrust torque; in the case of new bearings, check continuous torque.

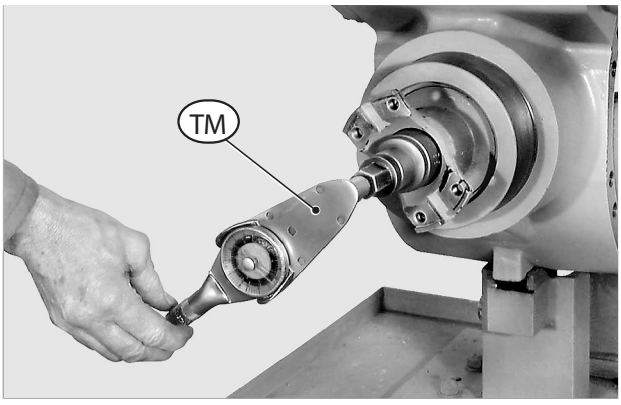

FIGURE 34: Apply torque meter TM to pinion nut and check that torque will increase by 20 - 40 N·cm as a result of differential bearing preload.
Example: pinion torque: 120 - 130 N·cm
Pinion + differential torque: 140 - 170 N·cm.

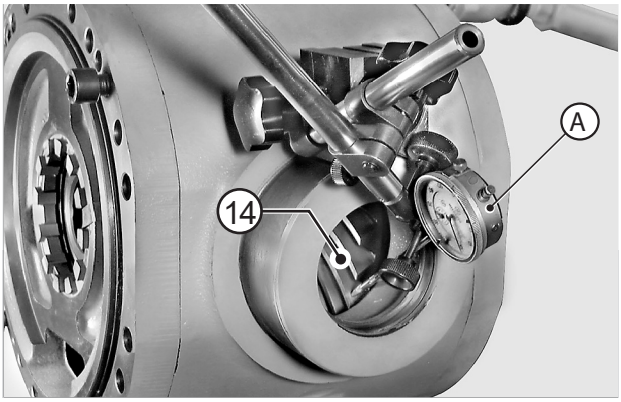

FIGURE 35: Introduce a dial indicator "A" with long tracer through the hole provided for the cap (12). Position the tracer on the side of a tooth of the ring gear, approximately 5 mm from the outer rim; preload by about 1 mm and zero the dial indicator.

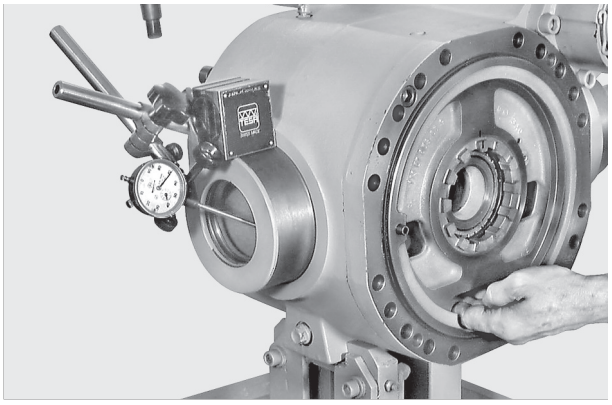

FIGURE 36: As you hold the pinion in position, move the ring gear (14) manually in both directions to check clearance between pinion and ring gear. Standard clearance. See table

RATIO - *RAPPORTO* VERHÄLTNIS - *RAPORTE* - RAPPORT	CLEARANCE - *GIOCO* - SPIEL *JUEGO* - JEU	
	MIN.	MAX.
9÷29	0,25	0,33
9÷33	0,25	0,33
11÷34	0,25	0,33

FIGURE 37: CAUTION! Difference between minimum and maximum clearance for whole circumference must not exceed 0.09 mm.

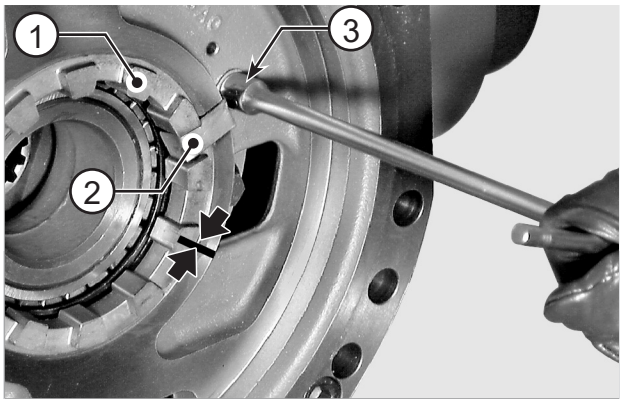

FIGURE 38: If torque and/or pinion-ring gear clearance is not within tolerance values and the ring nuts have not been removed, mark the position of the ring nuts (1) and remove the safety plates (2).

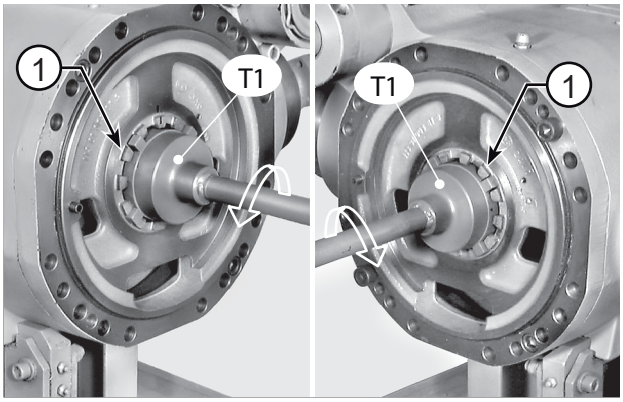

FIGURE 39: Adjusting clearance between pinion and ring gear.
To INCREASE: loosen the ring nut on ring gear side and tighten the ring nut on non-ring gear side by the same measure.
To DECREASE: perform the same operations inversely. To rotate ring nuts, use special wrench T1 (See drawing T1 p. 113).

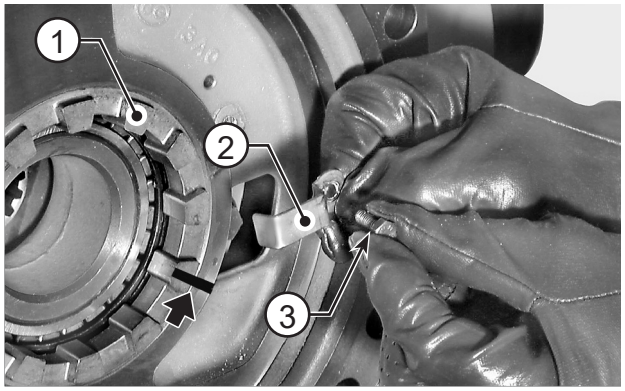

FIGURE 40: Install the stops (2) for the ring nuts (1). Engage stops in the slot next to the holes provided for the check screws. Coat screws (3) with Loctite 242 and tighten to a torque of 7 - 10 N·m.

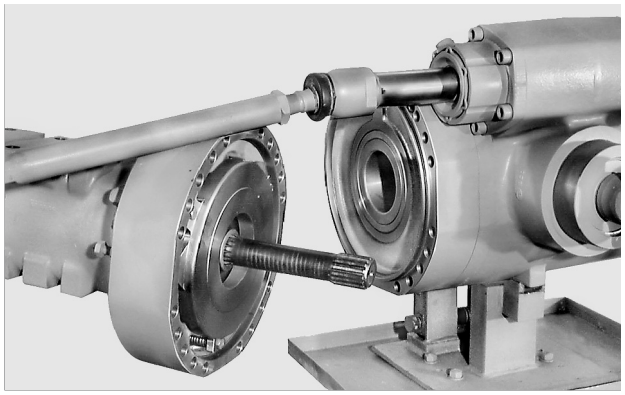

FIGURE 41: Install negative brake cylinders and arms. For details, see BRAKE WEAR CHECK PROCEDURE p. 21.

SPECIAL TOOLS

T1

P/N: 2369

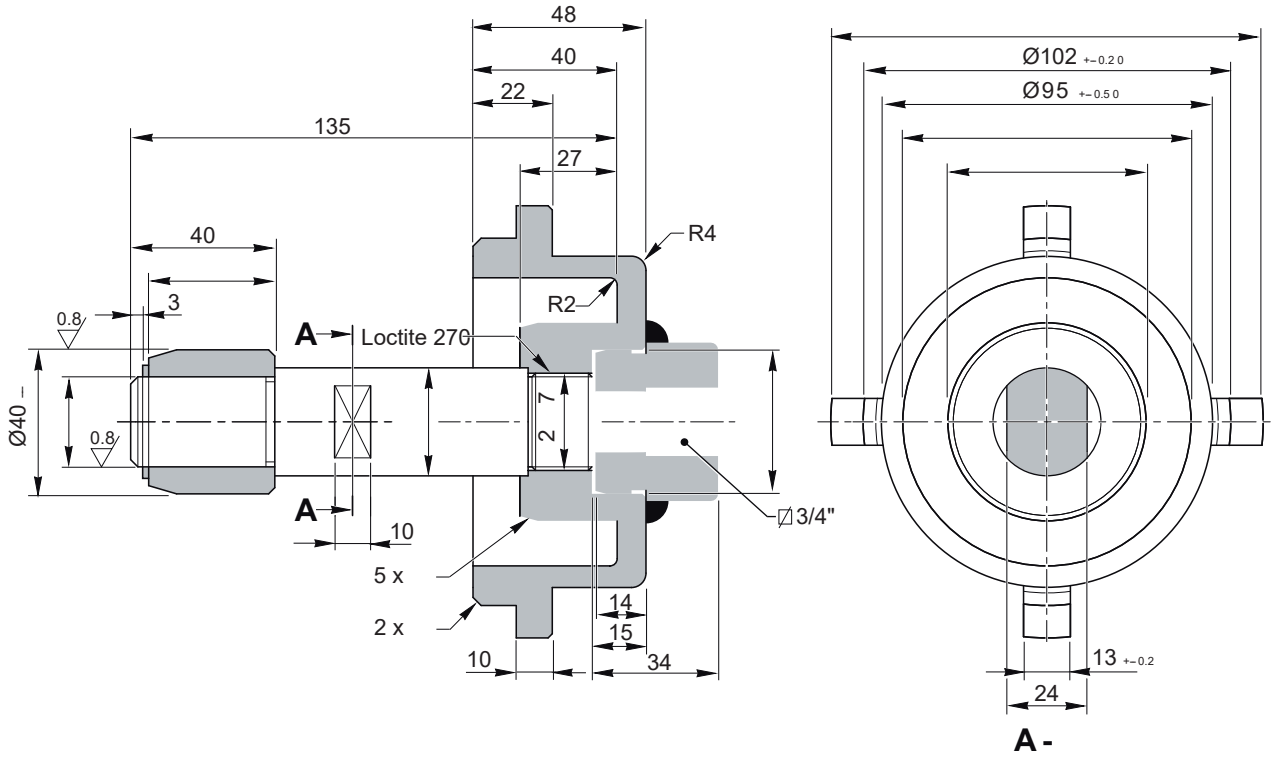

T2

P/N: 2370

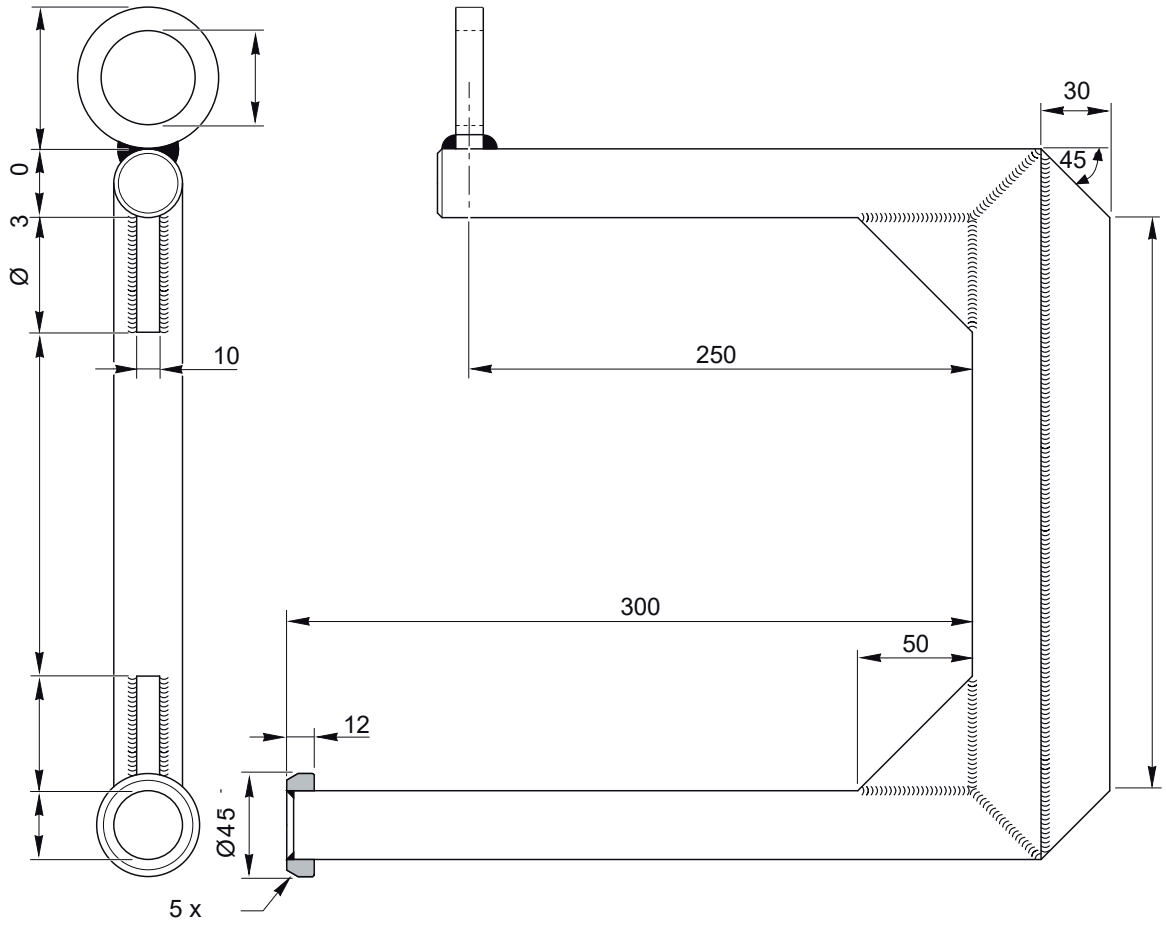

T3

P/N: 2371

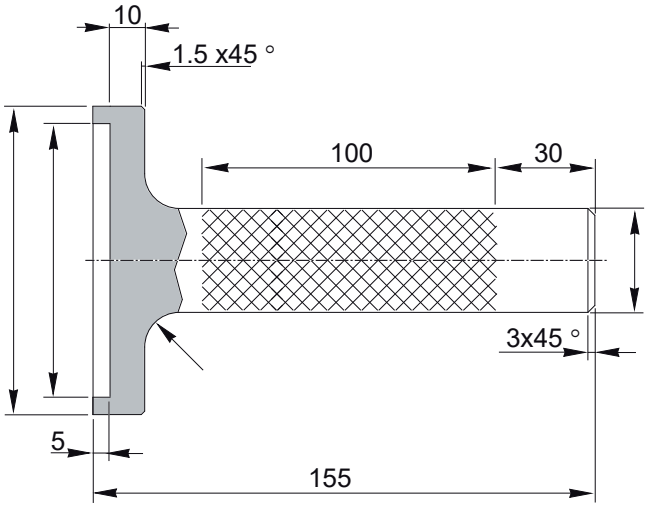

BEVEL PINION

EXPLODED VIEW

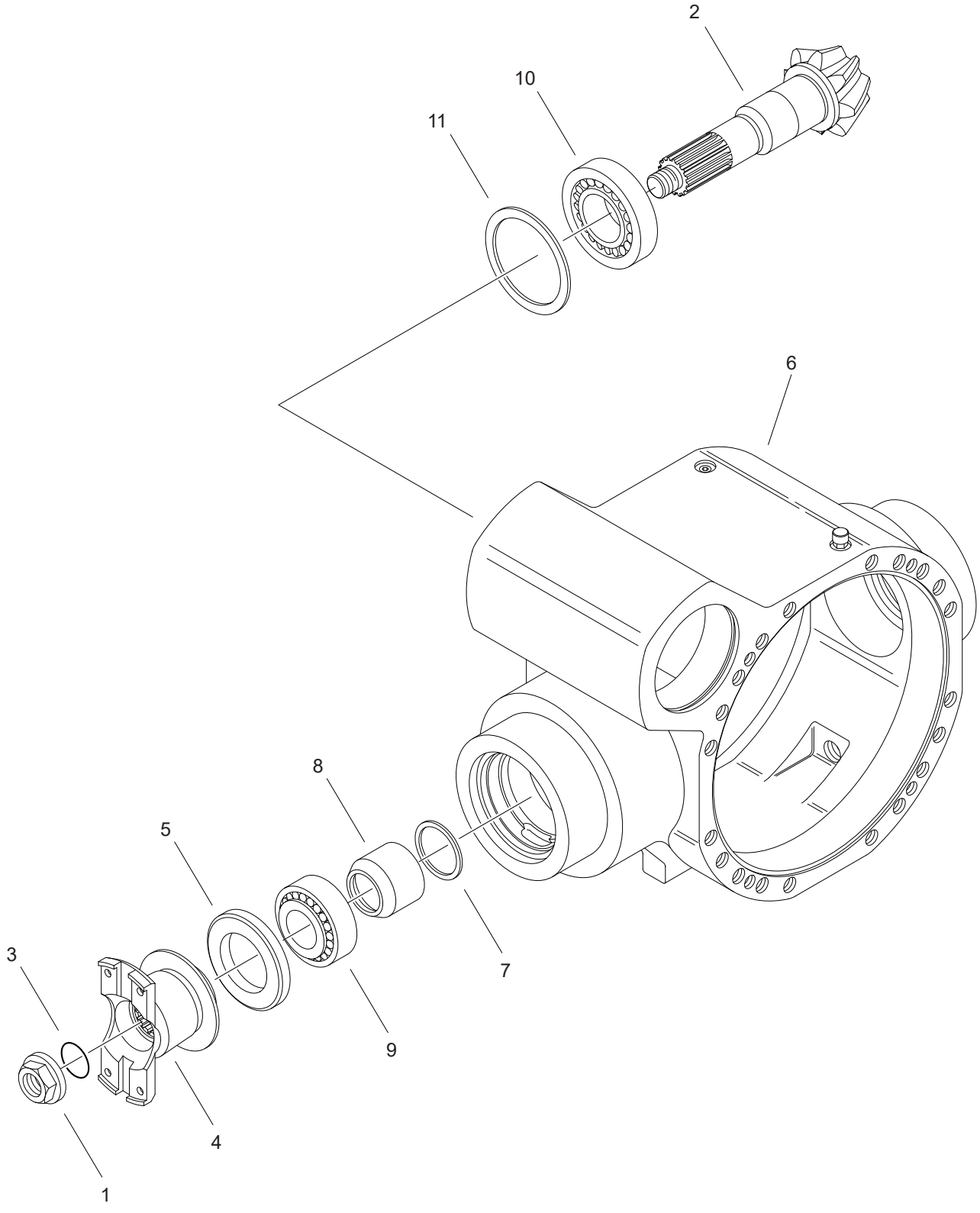

DISASSEMBLY

⚠CAUTION

Before draining oil, release the internal pressure, for details see OIL DRAINING MANDATORY PROCEDURE p. 14.

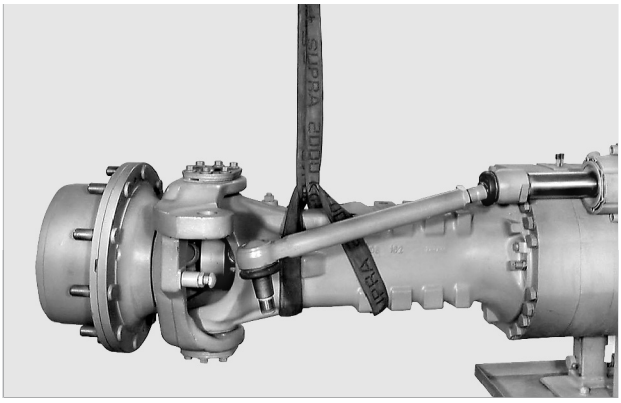

FIGURE 1: Remove the arms, negative brake cylinders and differential unit.
For details, see BRAKE WEAR CHECK PROCEDURE p. 21 and DIFFERENTIAL UNIT p. 103.

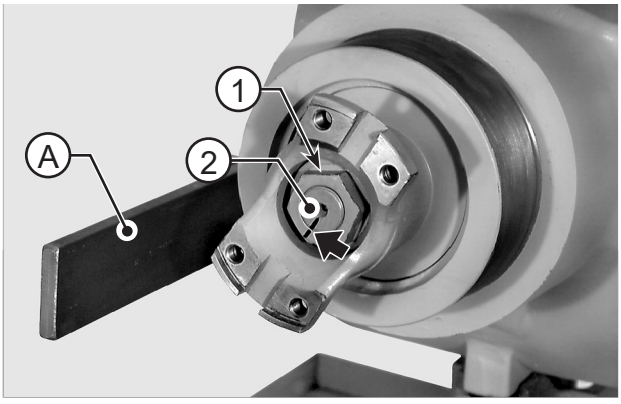

FIGURE 2: Make match marks across the joint seam between nut (1) and pinion (2) and apply a reaction bar "A" to the main body.

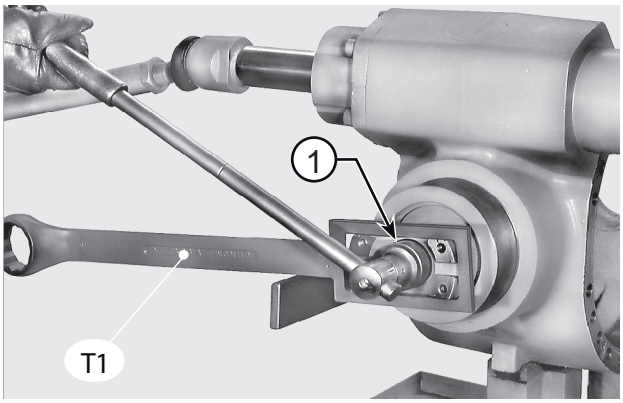

FIGURE 3: Apply wrench T1 (See drawing T1 p. 124) to hold the pinion tight and, using a socket wrench, loosen nut (1).

⚠CAUTION

If disassembly proves hard, heat the nut (1) with a heat gun to a temperature of about 176 °F [80 °C].

⚠WARNING

Wear protective garments when handling hot objects.

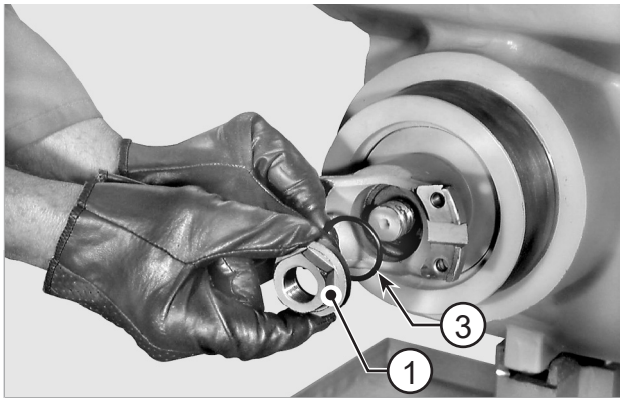

FIGURE 4: Remove nut (1) and o-ring (3).

NOTE:

If the nut is heated to assist removal, then the o-ring must be replaced.

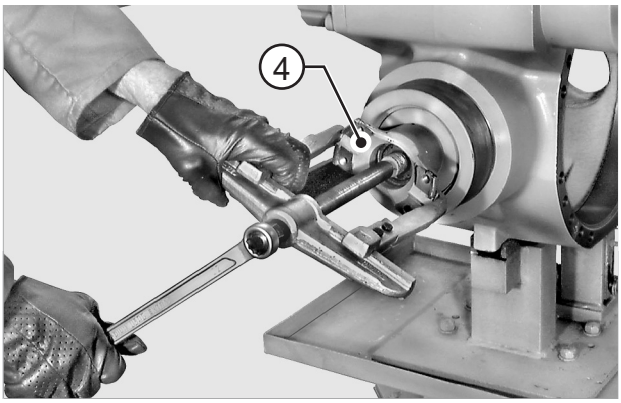

FIGURE 5: Using a puller, pull out and remove the flange (4).

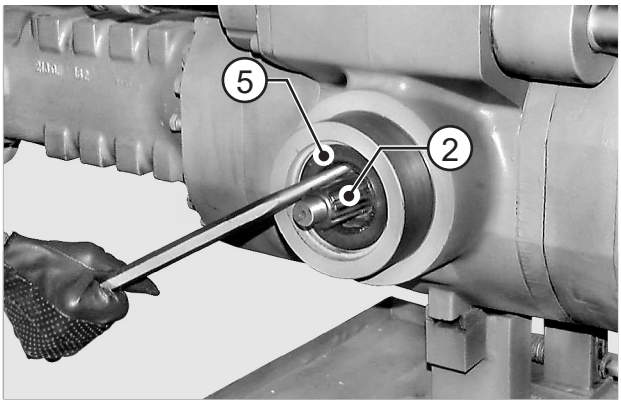

FIGURE 6: If only the seal ring (5) of pinion (2) is to be replaced, pull ring out using a screwdriver or a lever.

NOTE:

1 - Do not damage ring seat and pinion.
2 - Replace the seal ring and install the new one using tool T4 (See drawing T4 p. 127) once AREXSONS rubber cement has been applied to the outer surface; smear with Loctite 270 the pinion thread and tighten nut (1) up to the marks.

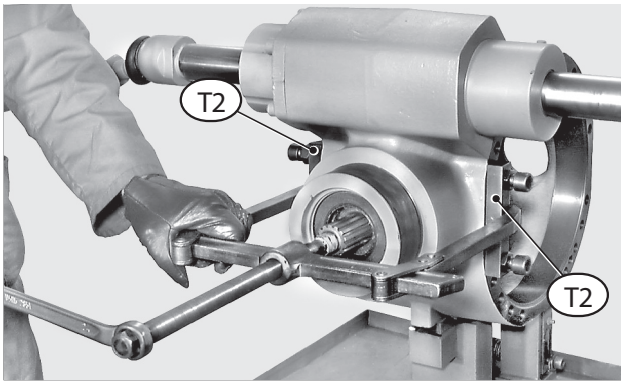

FIGURE 7: Apply small blocks T2 (See drawing T2 p. 125) to the main body (6) and, using a puller, remove the entire pinion (2).

NOTE:

Outer bearing and thrust blocks remain in the main body

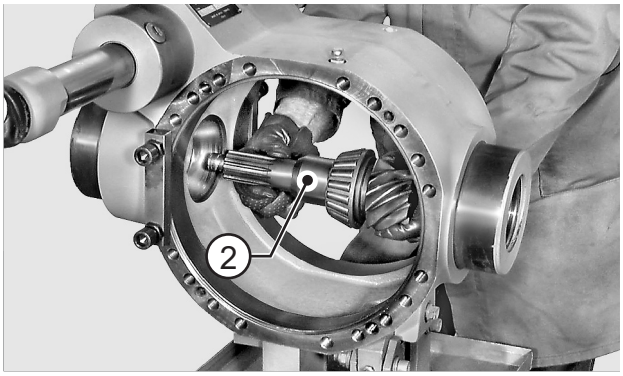

FIGURE 8: Remove pinion (2), calibrated spacer (7), and spacer (8).

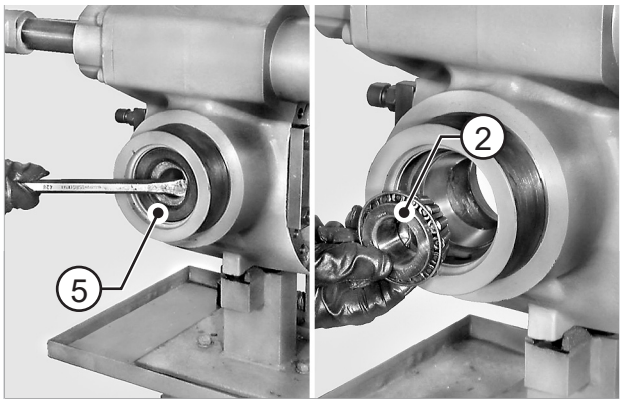

FIGURE 9: Remove the seal ring (5) of pinion (2) and outer bearing (9).

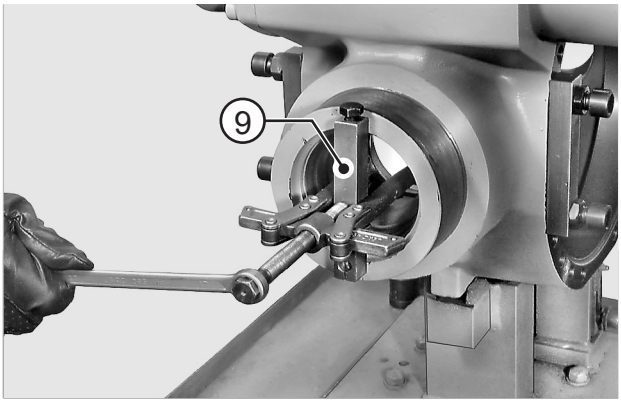

FIGURE 10: Using a puller for inner parts, remove the thrust block of outer bearing (9).

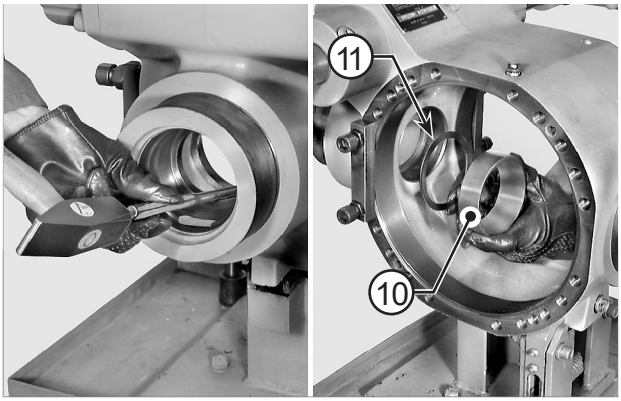

FIGURE 11: Using a punch of soft material, remove the thrust block of inner bearing (10) and shims (11).

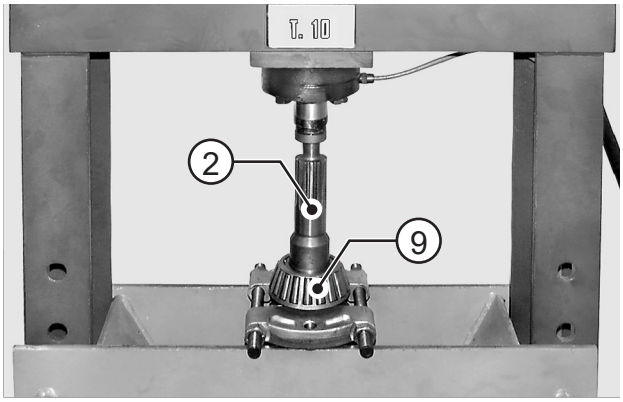

FIGURE 12: Using a separator and a press, remove the inner bearing (9) from the pinion (2).

INSTALL AND ADJUST

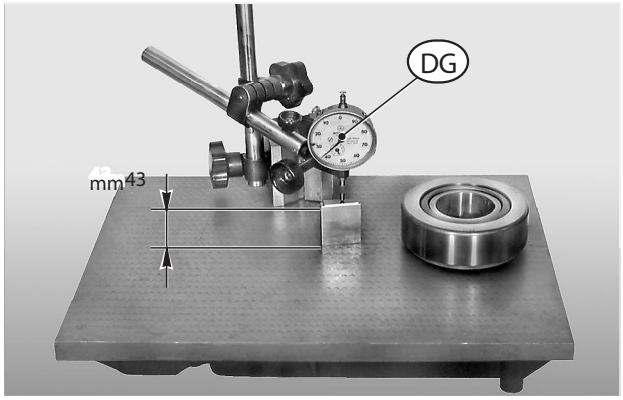

FIGURE 13: CALCULATING PINION CENTER DISTANCE
Using a faceplate, reset a dial indicator "DG" on a calibrated block (whose known thickness is 43 mm). Preload the comparator by about 3 mm.

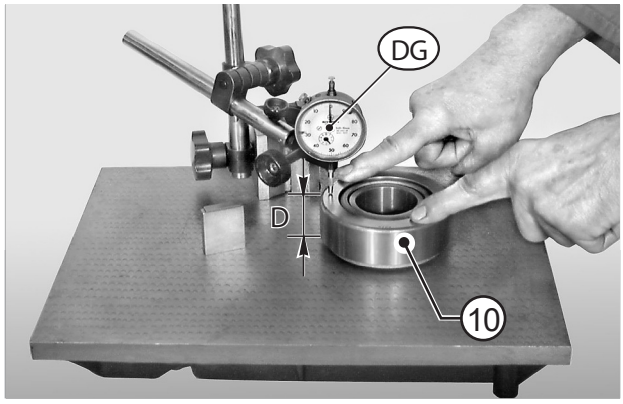

FIGURE 14: Bring inner bearing (10), complete with thrust block, under the dial indicator "DG".
Calculate total thickness "D" of bearing by checking deviation compared with the dimension of block.
EXAMPLE: 43-0.62 = 42.38 = "D".

⚠CAUTION

Press the thrust block centrally and carry out several measurements by rotating the thrust block.

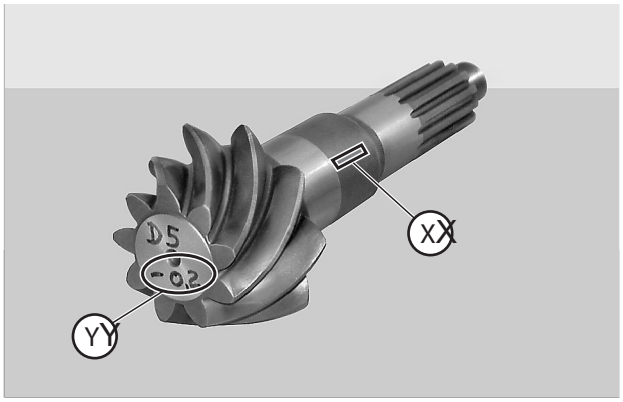

FIGURE 15: Check nominal dimension "X" as marked on the pinion. Add up to or subtract from "X" the variation indicated as "Y" to obtain the actual center distance "I". EXAMPLE: I = 153 - 0.2 = 152.8

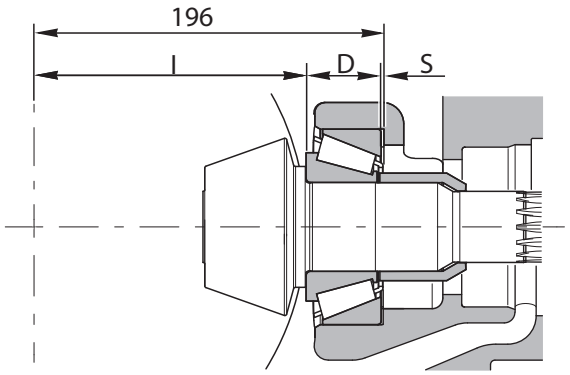

FIGURE 16: Calculate shims "S" for insertion under the thrust block of the inner bearing using the following formula: S = 196 - (I + D) where: 196 = fixed dimension I = actual pinion Center distance
D = Total bearing thickness;
EXAMPLE: S = 196 - (152.8 + 42.38) = 0.82 mm.

FIGURE 17: Subtract 0.05 - 0.07 mm from the resulting S value, until the value is rounded off to the lower 5/100.
EXAMPLE: S = 0.82 = 0.75 mm.
Make up the pack of shims "S".

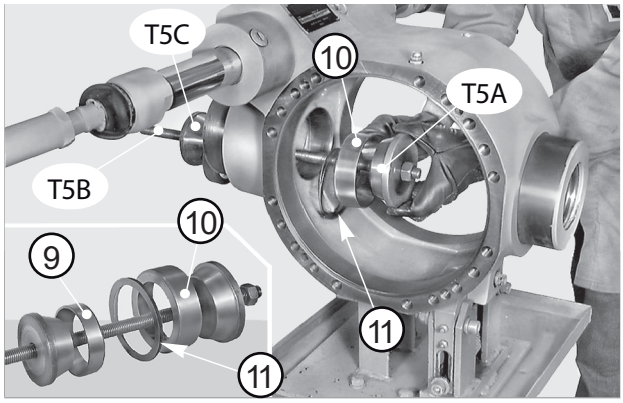

FIGURE 18: Assemble driver T5A (See drawing T5 p. 128), thrust block of inner bearing (10) and pack of shims (11) onto tension bar T5B (See drawing T5 p. 128) Introduce the tension bar into the main body and mount the thrust block of outer bearing (9) and driver T5C (See drawing T5 p. 128).

NOTE:

Grease shims to hold in position.

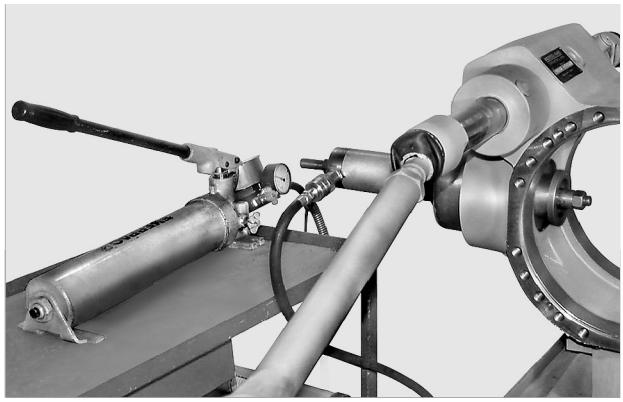

FIGURE 19: Connect the tension bar to the press and push the thrust blocks of bearings (9, 10) into their seats. Disconnect from the press and remove tension bar and drivers.

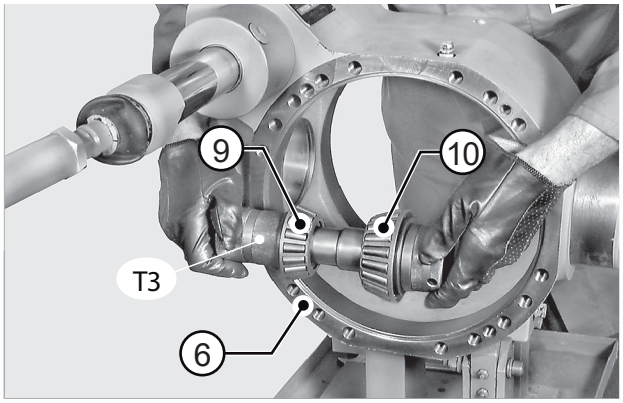

FIGURE 20: CALCULATING PINION BEARINGS ROLLING TORQUE
Introduce tool T3 (See drawing T3 p. 126) complete with bearings (9, 10) into the main body (6); tighten by hand until a rolling torque is definitely obtained.

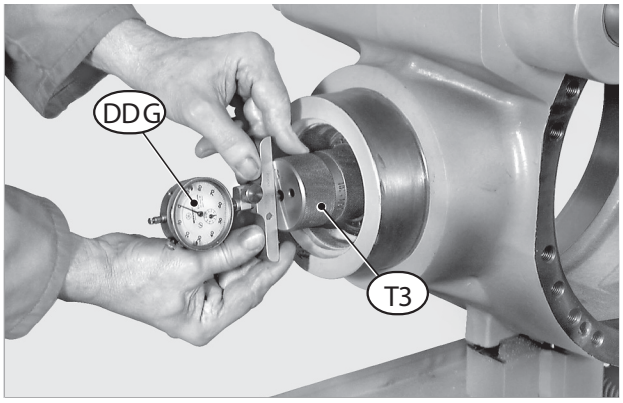

FIGURE 21: Introduce the tracer of a depth gauge "DDG" into either side hole of tool T3 (See drawing T3 p. 126). Reset the comparator with a preload of about 3 mm.

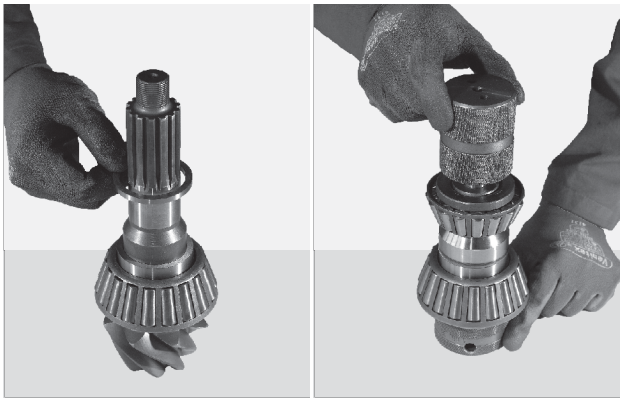

FIGURE 22: Remove the comparator and remove tool and bearing kits from the main body. Reinstall every part, also introducing a spacer (8) between bearings (9, 10). Tighten the entire pack by hand.

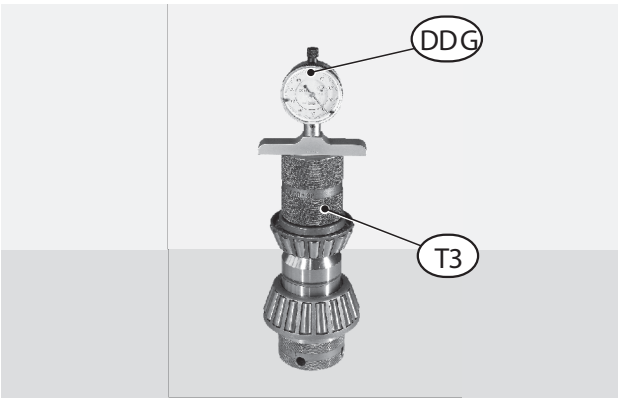

FIGURE 23: Introduce depth gauge "DDG" in tool T3 (See drawing T3 p. 126) and measure deviation "H" from the previous reset.
EXAMPLE: "H" = 1.19 mm.

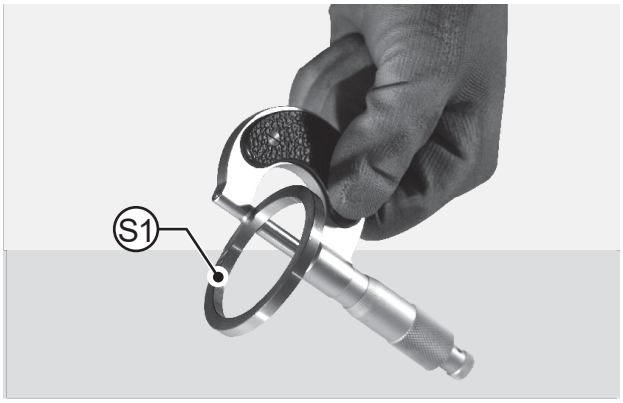

FIGURE 24: Deviation "H" must be added to a set value of 0.12 - 0.13 mm to obtain the calibrated spacer "S1" (7) for insertion between inner bearing (10) and spacer (8). Dimension "S1" must be rounded off to the higher 5/100. EXAMPLE: S1 = H + X = 1.19 + (0.12 - 0.13) = 1.31 = 1.35 mm.

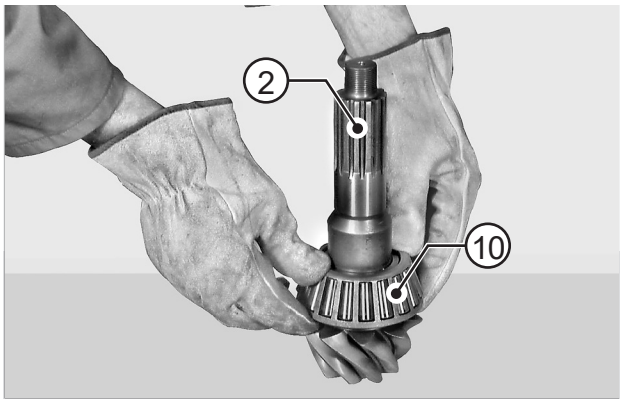

FIGURE 25: Heat the inner bearing (10) to about 212 °F [100 °C] and fit it onto the pinion (2).

⚠WARNING

Wear protective garments when handling hot objects.

NOTE:

Once the bearing has cooled down, lightly lubricate bearing (10) with SAE85W90 oil.

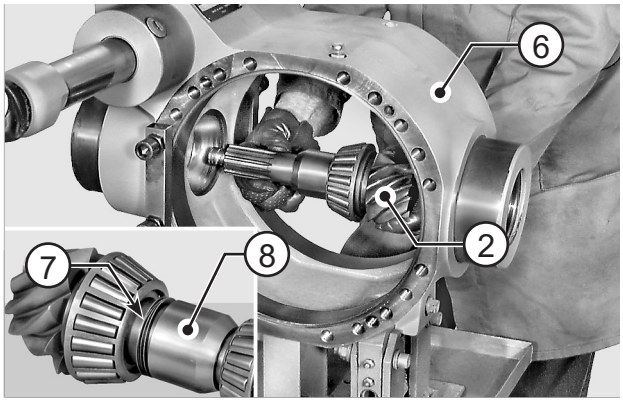

FIGURE 26: Fit the pinion (2), calibrated spacer (7) and spacer (8) in the main body (6).

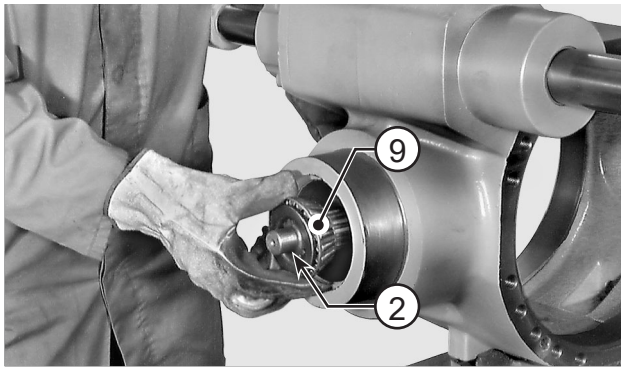

FIGURE 27: Heat the external bearing (9) to a temperature of about 212 °F [100 °C] and fit it on to the pinion (2) to complete the pack as shown in the figure above.

⚠WARNING

Wear protective garments when handling hot objects.

NOTE:

Lightly lubricate bearing (10) with SAE85W90 oil.

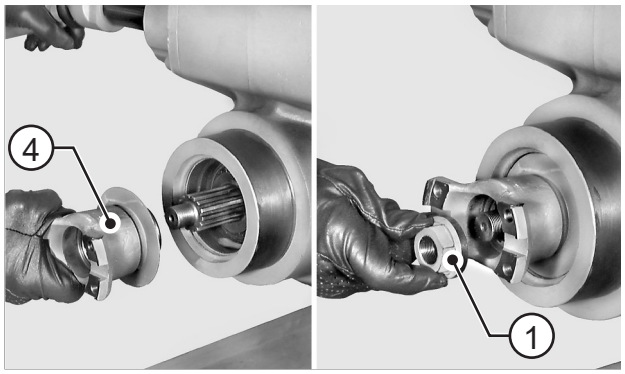

FIGURE 28: Install flange (4) and nut (1).

⚠CAUTION

Do not mount the seal ring (5) and o-ring (3) at this stage.

NOTE:

If necessary, use a plastic hammer to align the flange.

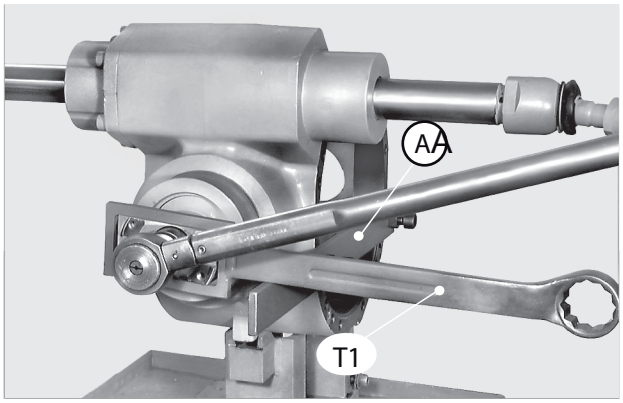

FIGURE 29: From the main body (6), remove the small reaction blocks T2 (See drawing T2 p. 125) for pinion extraction and install reaction bar "A".
Engage tool T1 (See drawing T1 p. 124) on the flange and tighten nut (1) to the minimum permitted torque. Permitted torque: 600 - 800 N·m.

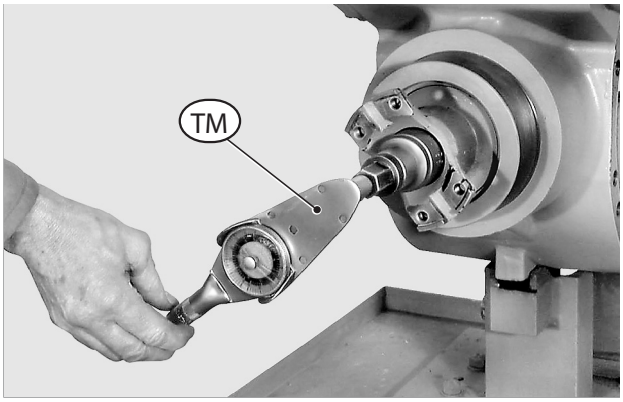

FIGURE 30: Apply a torque meter "TM" onto pinion nut (1) and check pinion torque. Torque: 120 - 150 N·cm

⚠CAUTION

If torque exceeds maximum value, increase calibrated spacer "S1" (7) between bearing (10) and spacer (8). If torque does not reach the set value, increase the tightening torque of nut (1). Do this in several stages until the maximum permitted value of 800 N·m is reached.

If torque does not reach minimum value, reduce calibrated spacer "S1" (7).

In order to be able to calculate increase or reduction in calibrated spacer "S1" it should be taken into account that for every 0.01 mm. variation in calibrated spacer (7), pinion (2) torque varies by 60 N·cm.

Before completing the installation of the pinion and relative seals, install the differential unit.

For details, see DIFFERENTIAL UNIT p. 103.

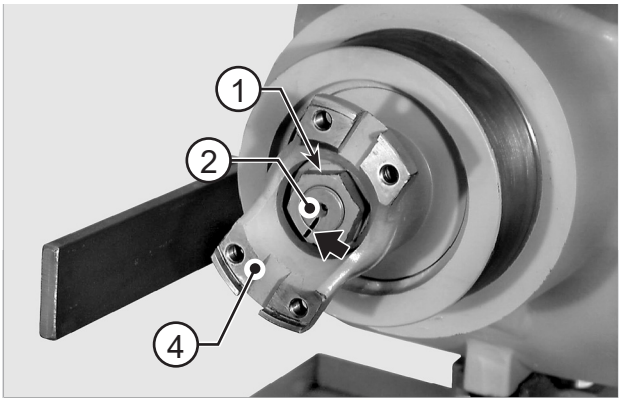

FIGURE 31: Make positional marks across nuts (1) and pinion tang (2); then, remove nut and flange (4).

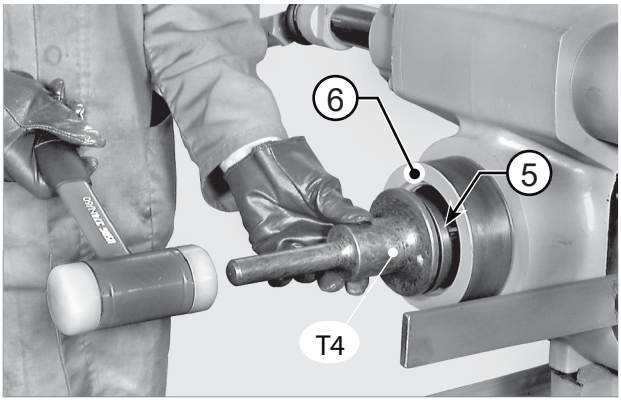

FIGURE 32: Apply Arexons rubber cement to the outer surface of the new seal ring (5) and fit ring in the main body (6) using driver T4 (See drawing T4 p. 127).

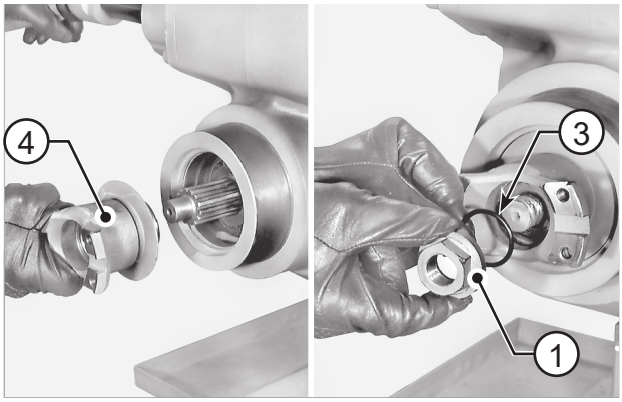

FIGURE 33: Oil seal ring lips and install flange (4). Mount o-ring (3) and apply Loctite 270 to pinion tang; tighten nut (1).

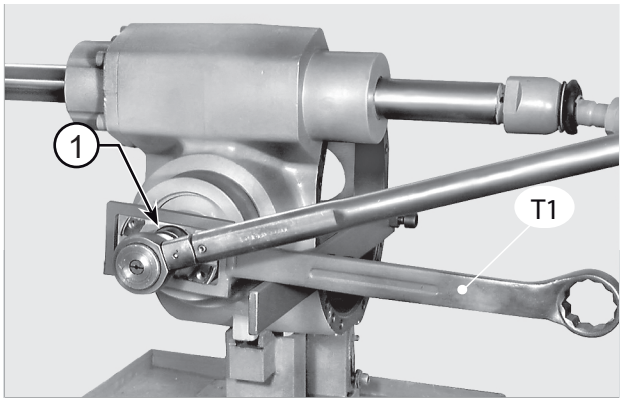

FIGURE 34: Tighten the nut until the match marks line up.

SPECIAL TOOLS

T1

P/N: 2372

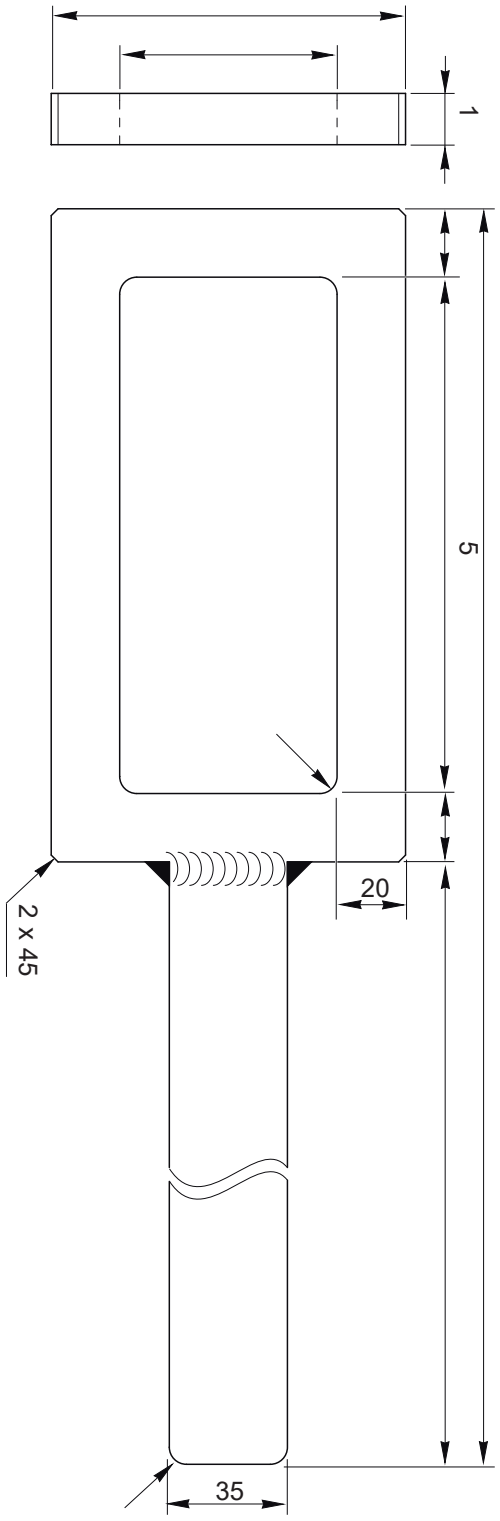

T2

P/N: 2373

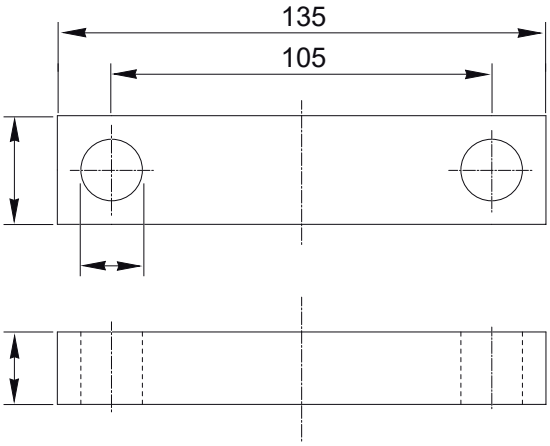

T3

P/N: 2374

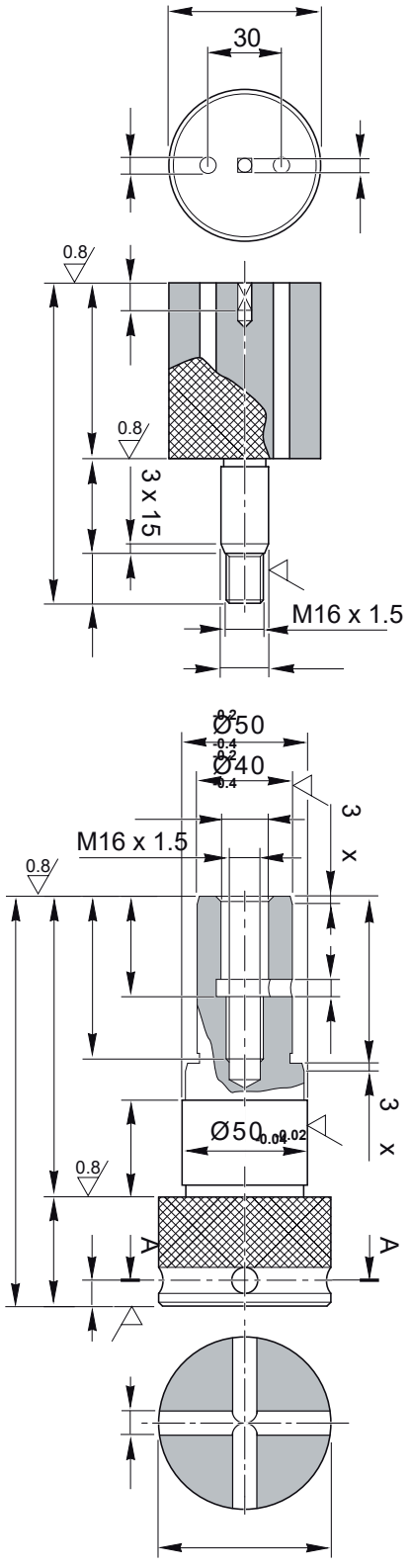

T4

P/N: 2375

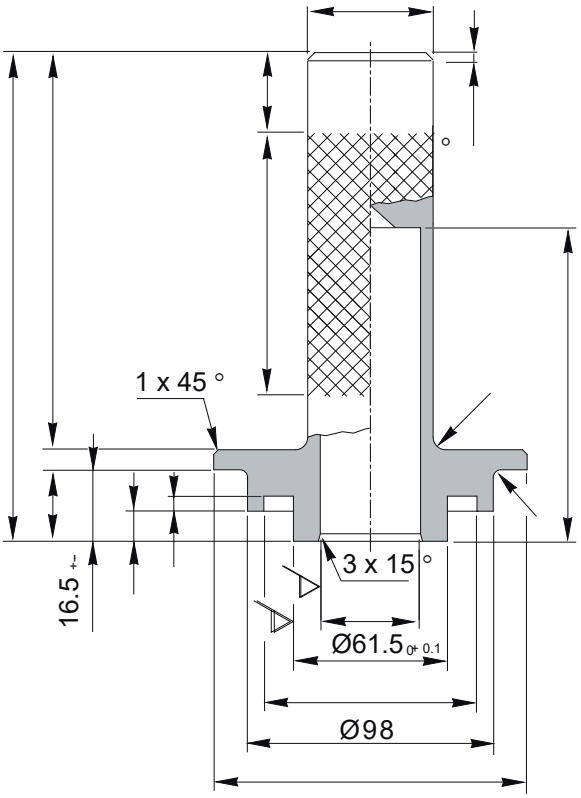

T5

P/N: 2377

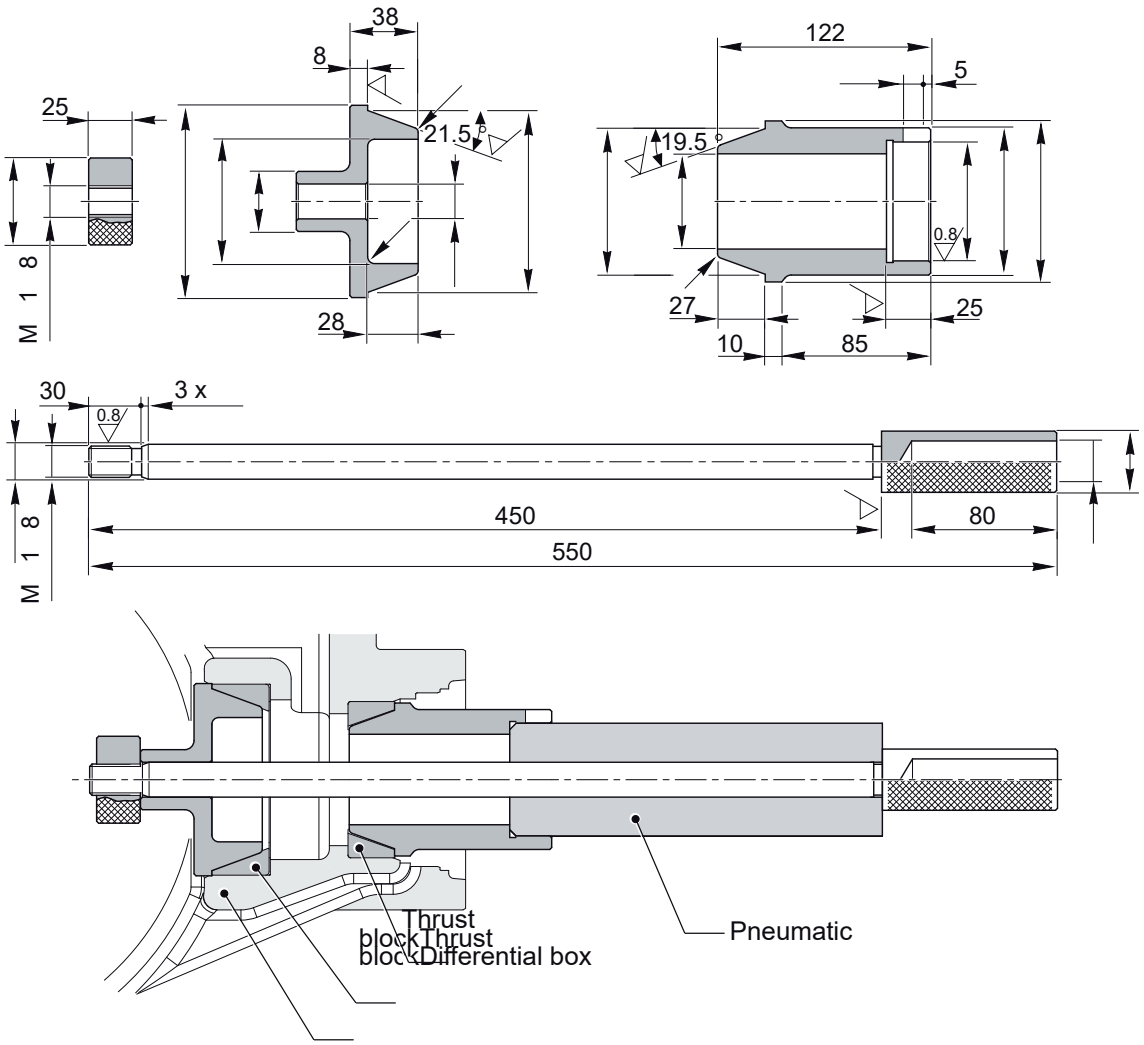
38
8
25
21.5°
M 1 8
28
122
5
19.5°
0.8
27
25
10
85
30
3 x
0.8
450
80
550
M 1 8
Thrust block
Thrust block
Differential box
Pneumatic

HYDRAULIC DIFFERENTIAL UNIT

EXPLODED VIEW

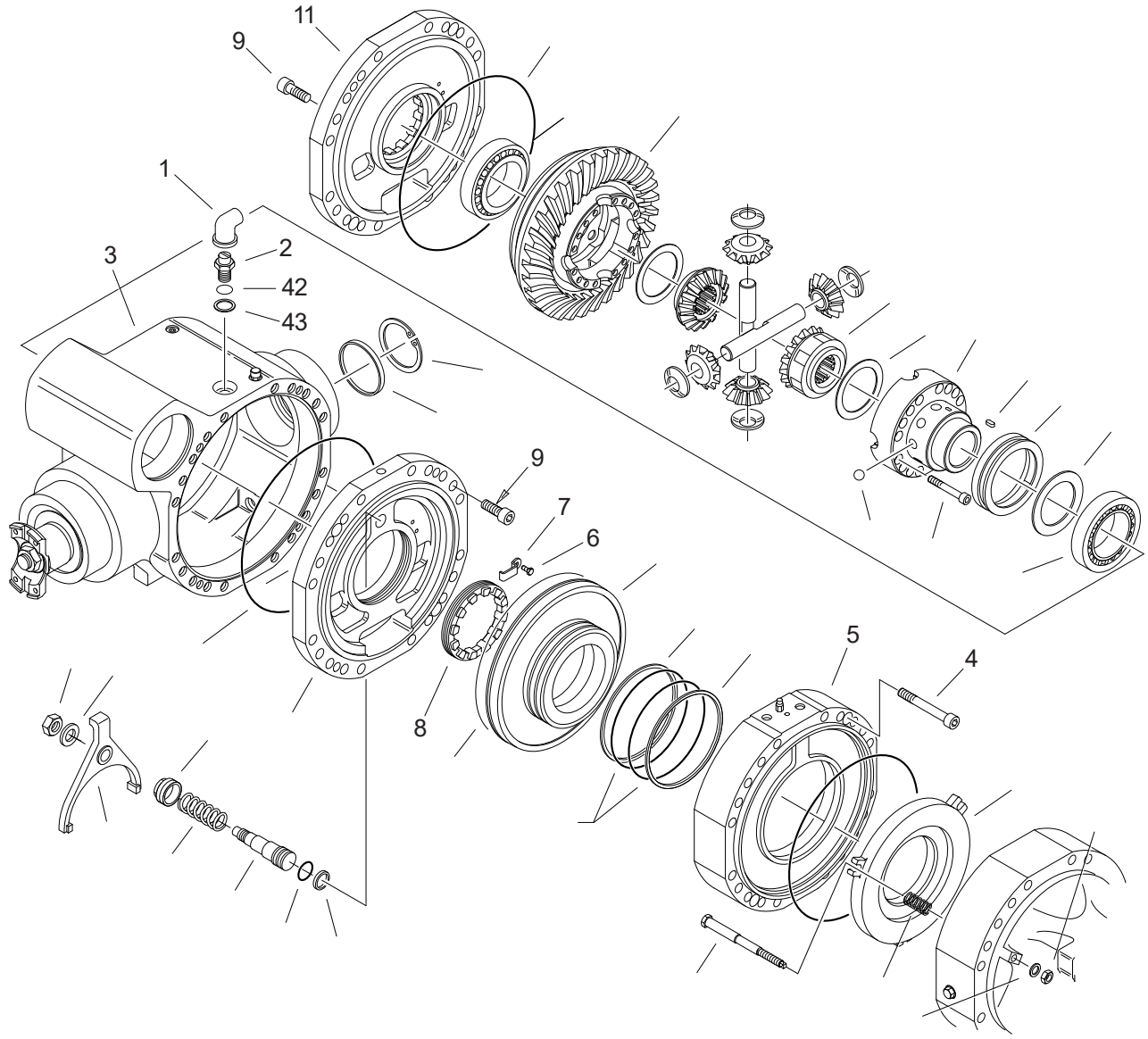

DISASSEMBLY

⚠CAUTION

Before draining oil, release the internal pressure, for details see OIL DRAINING MANDATORY PROCEDURE p. 14.

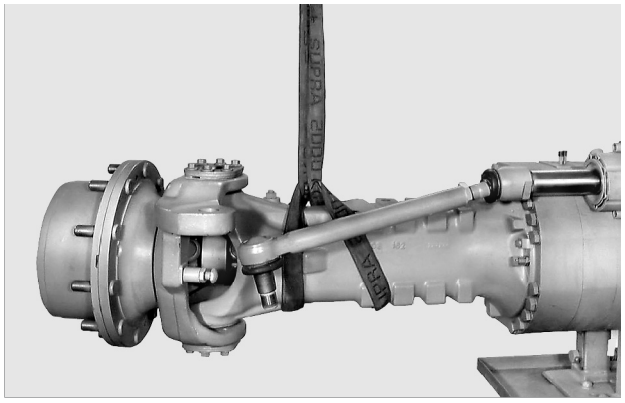

FIGURE 1: Remove the arms. For details, see BRAKE WEAR CHECK PROCEDURE p. 21.

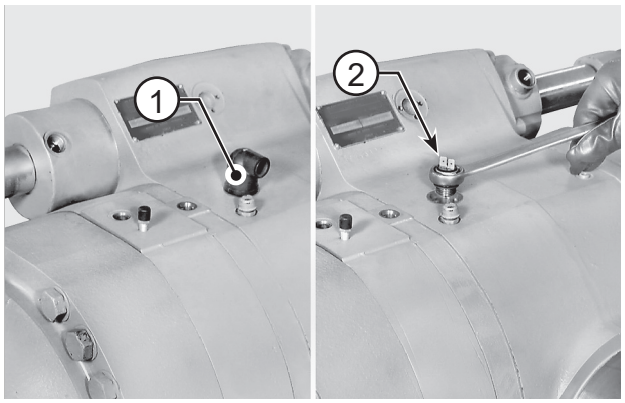

FIGURE 2: Remove both guard (1) and microswitch (2).

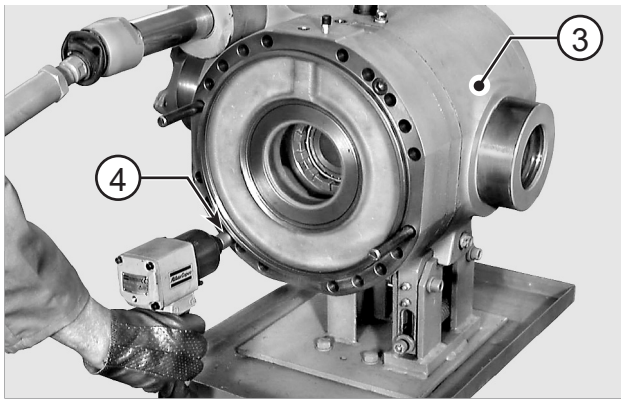

FIGURE 3: Tighten two safety studs "A" (M16) in two opposing holes in the main body (3). Loosen and remove the screws (4).

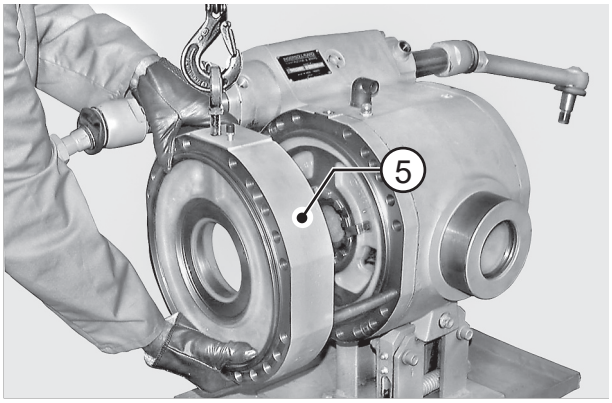

FIGURE 4: Connect to a hoist and remove the complete brake cylinder (5).

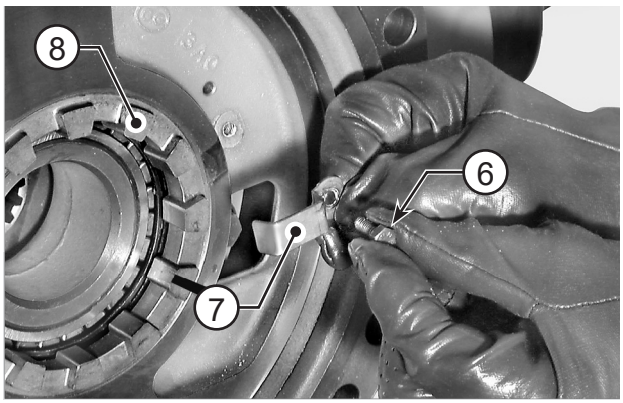

FIGURE 5: Remove screws (6) and safety plates (7) from adjustment ring nuts (8).

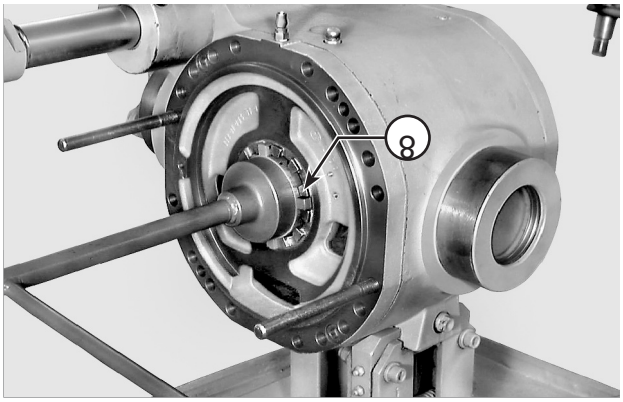

FIGURE 6: Only if locking piston seal is replaced: make positional marks across the adjustment ring nut on non-ring gear side.
Loosen the ring nut (8) by about 6 mm (4 turns).

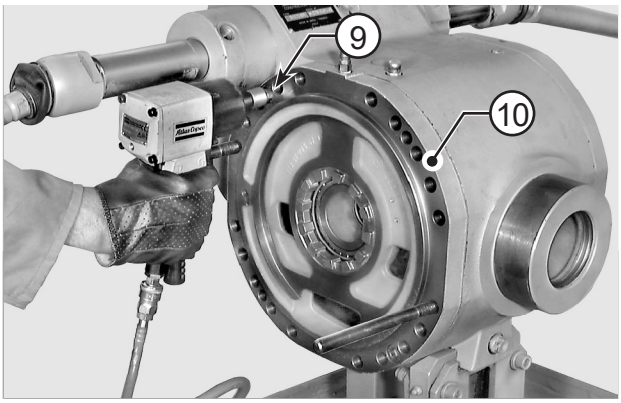

FIGURE 7: Loosen and remove check screws (9) from intermediate cover (10) and apply a compressed air connection "B" to the lock's pressure intake hole.
Thread: M14x1.5

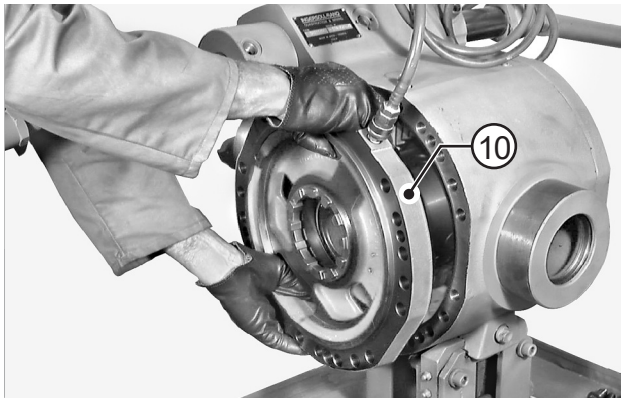

FIGURE 8: Introduce low-pressure compressed air through connection "B" and make sure that the lock control piston comes out at end of stroke.
Remove safety studs, rotate cover (10) to an angle of about 45°, and remove cover.

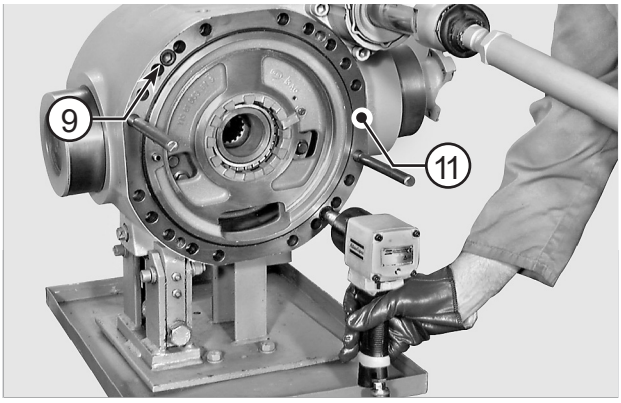

FIGURE 9: Tighten two safety studs "A" (M16) in the main body. Loosen and remove check screws (9) from intermediate cover (11) on ring gear side.

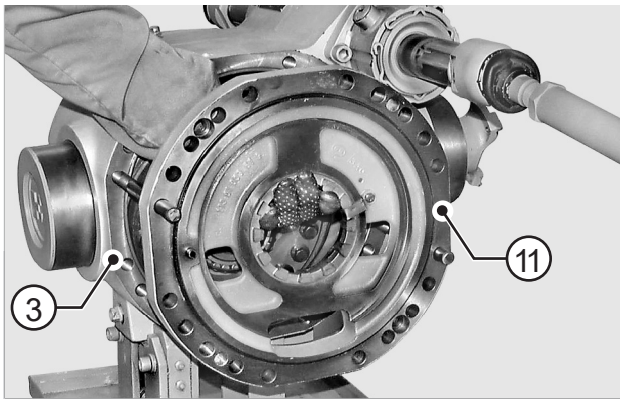

FIGURE 10: Support the differential unit and disconnect intermediate cover (11) from main body (3). Remove cover (11).

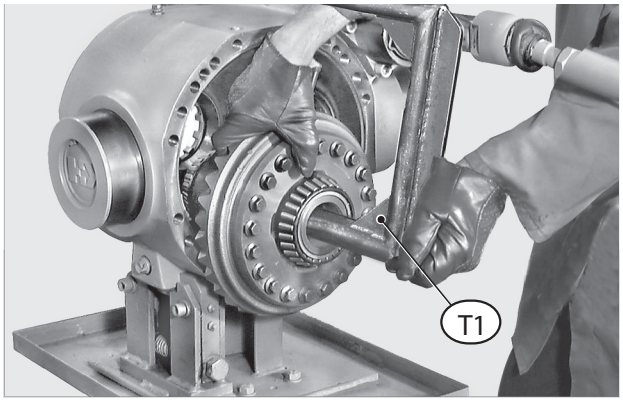

FIGURE 11: Remove the differential unit by using tool T1 (See drawing T1 p. 139) and position the unit on a

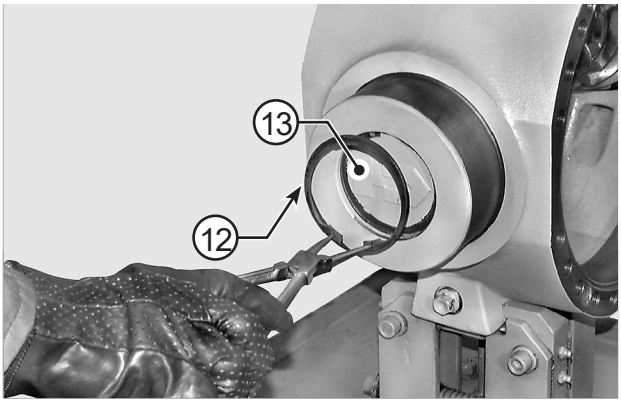

FIGURE 12: Remove the snap ring (12) and locking cap (13).

⚠CAUTION

MANDATORY PROCEDURE

Set the pliers following the correct procedure shown in END-STOP PLIER SETTING p. 15.

⚠WARNING

Removal of the snap rings can cause personal injuries. You must wear appropriate safety equipment. To avoid injury to eyes, wear eye protection equipment.

NOTE:

Replace the cap at each disassembly.

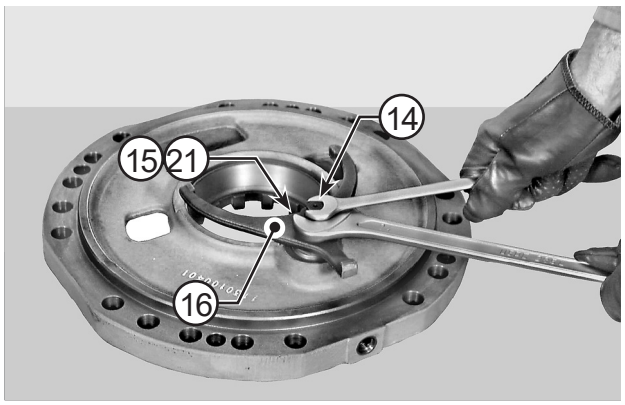

FIGURE 13: CONTROL DISASSEMBLY
While holding piston (14) in position, loosen selector fork (16) check nut (15).
Remove nut (15) and spring washer (21).

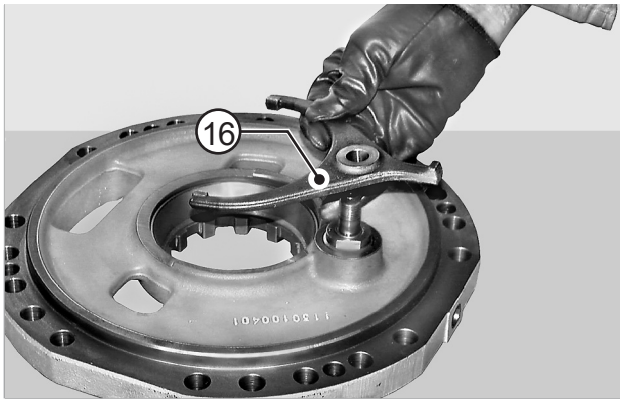

FIGURE 14: Remove selector fork (16).

NOTE:

Write down direction of installation and thoroughly inspect pad for wear.

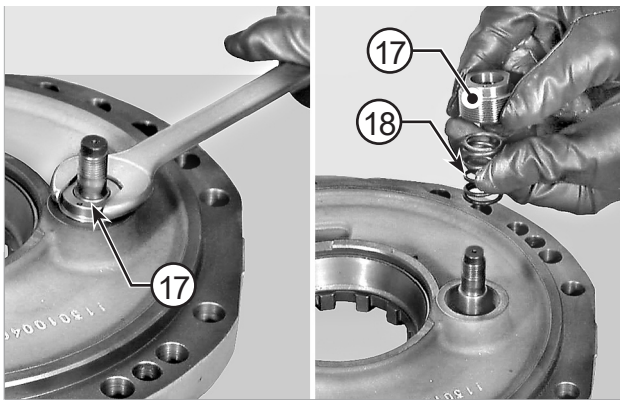

FIGURE 15: Loosen piston stop ring nut (17); remove ring nut and spring (18).

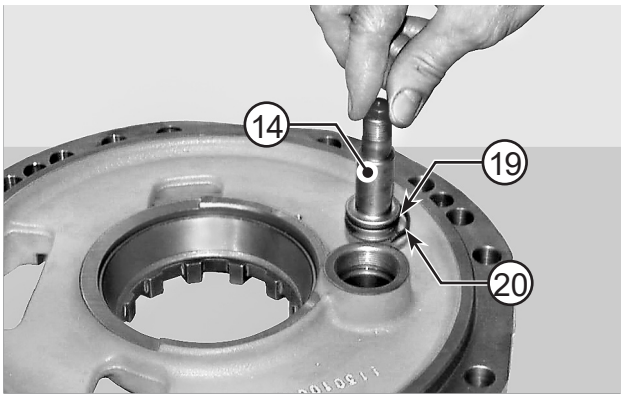

FIGURE 16: Remove piston (14) complete with o-ring (19) and guide pad (21).

NOTE:

Replace pad and o-ring at each disassembly.

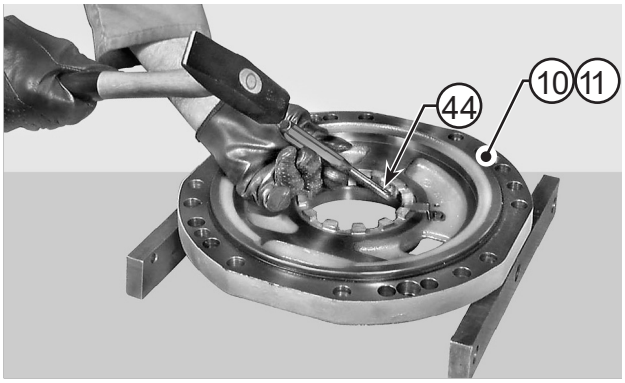

FIGURE 17: If bearings need replacing, remove the outer thrust blocks of bearings (44) from intermediate covers (10,

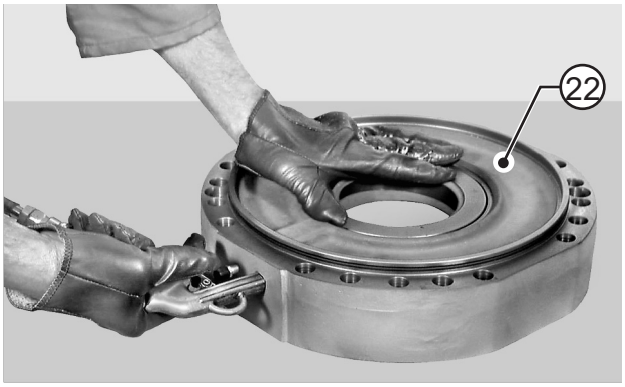

FIGURE 18: DISASSEMBLING THE BRAKE
Gently introduce low-pressure compressed air through the connection of the working brake line and eject the complete piston (22).

NOTE:

Replace seals (23, 24) and anti-extrusion rings at each disassembly.

FIGURE 19: DISASSEMBLING THE DIFFERENTIAL GEAR
With a puller applied under coupling (25), remove bearing (44) and shoulder (26) for coupling (25).

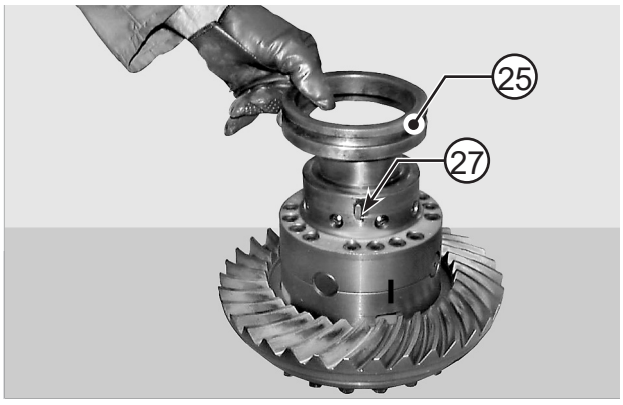

FIGURE 20: Remove coupling (25) and collect the drive balls (27).

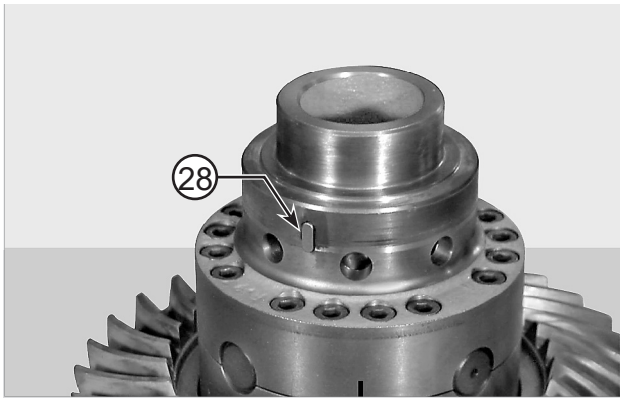

FIGURE 21: Only if necessary, remove guide key (28) from coupling (25).

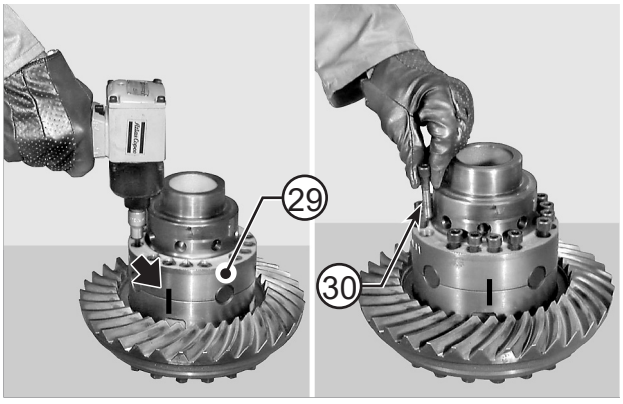

FIGURE 22: Make positional marks on the half-boxes of differential (29); loosen and remove joining screws (30).

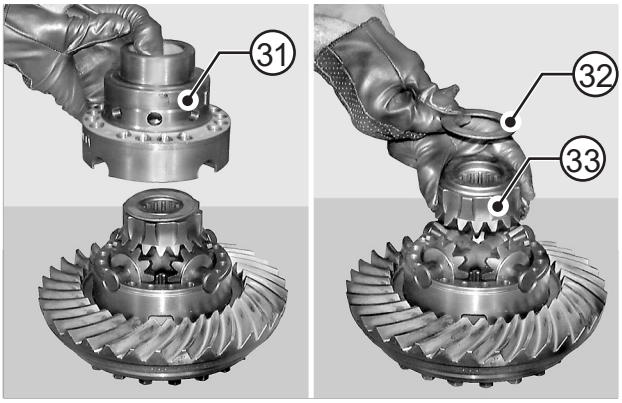

FIGURE 23: Remove upper half box (31), and then remove shoulder ring (32) and planetary gear (33). Complete differential disassembly procedure by following the instructions given in the first part of the manual (see DIFFERENTIAL UNIT p. 103).

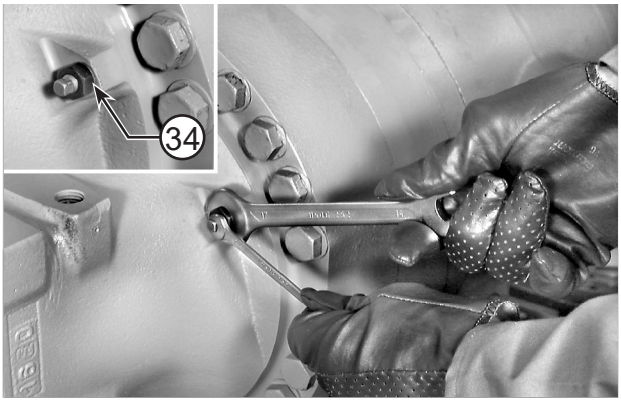

FIGURE 24: REPLACING THE BRAKE DISCS
Loosen and remove lock nuts (34) (qty. 3) and seal washers (35).

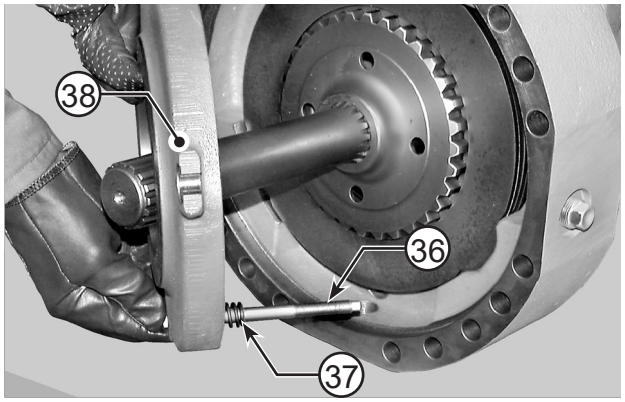

FIGURE 25: Remove screws (36), springs (37), and pressure plate (38).
Proceed by removing the brake discs.
(For details, see BRAKE WEAR CHECK PROCEDURE p. 21 in the first part of the manual).

ASSEMBLY

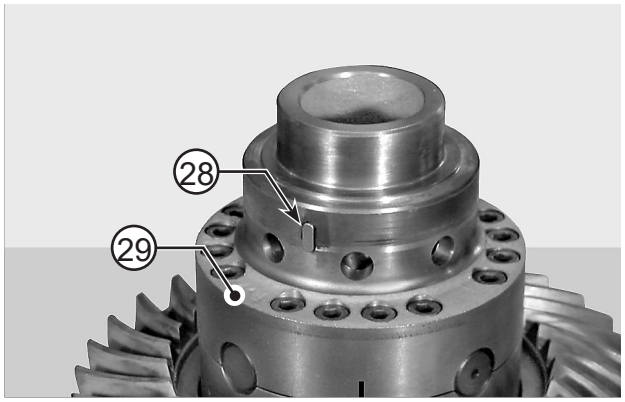

FIGURE 26: IF DIFFERENTIAL HAS BEEN DISASSEMBLED Assemble the differential unit (29). For details, see DIFFERENTIAL UNIT p. 103 in the first part of the manual. Put the guide key (28) of coupling (25) in

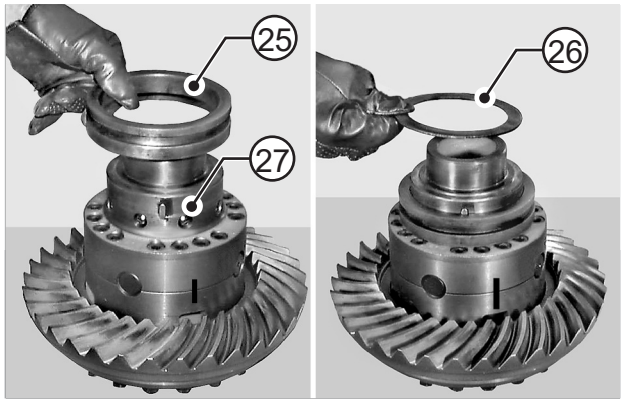

FIGURE 27: Grease the ball slots and fit in the balls (27), coupling (25), and shoulder (26).

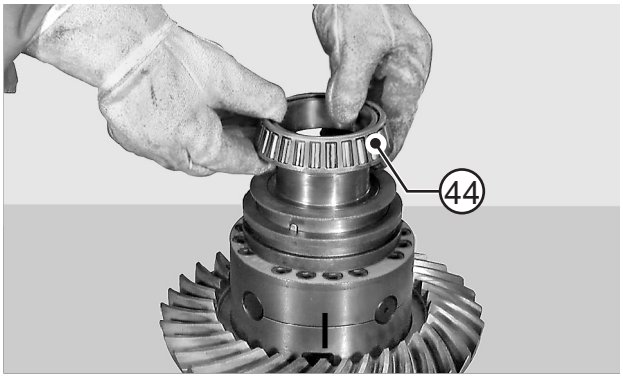

FIGURE 28: Heat bearing (44) to approximately 194 °F [90 °C] and install on the differential.

⚠WARNING

Wear protective garments when handling hot objects.

NOTE:

Make sure the bearing is securely engaged.

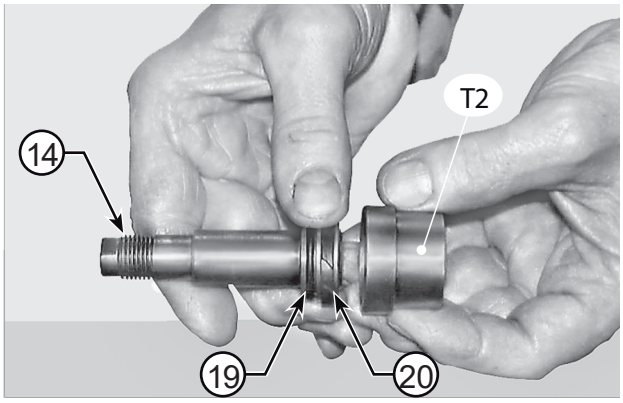

FIGURE 29: ASSEMBLING LOCK CONTROL
Fit o-ring (19) and guide ring (20) onto piston (14). Lubricate the seals and introduce the unit in tool T2 (See drawing T2 p. 140) .

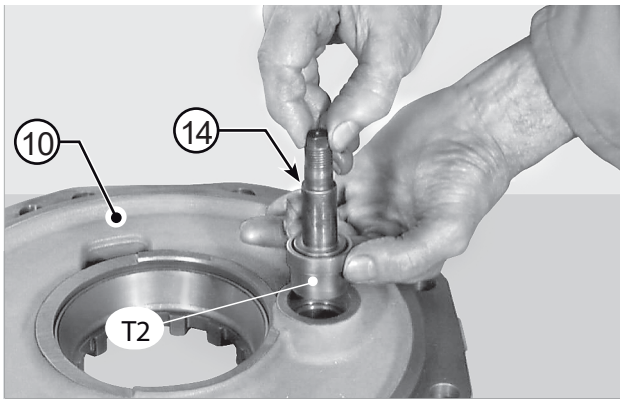

FIGURE 30: Place tool T2 (See drawing T2 p. 140) on the intermediate cover (10) and push piston (14) into its seat.

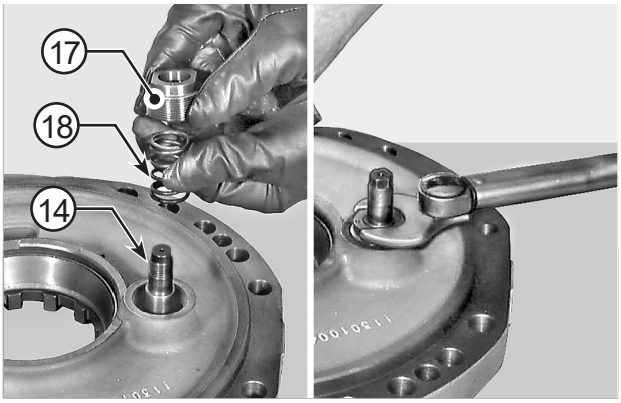

FIGURE 31: Fit spring (18) and ring nut (17) on piston (14). Tighten the ring nut by a few turns. Apply a coat of Loctite 242 to the ring nut and tighten to a maximum torque of 50 N·m.

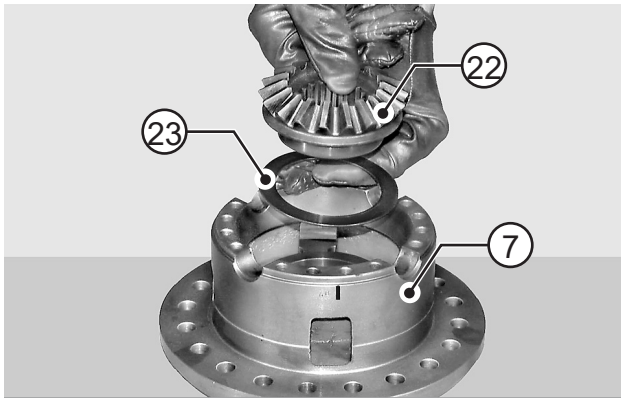

FIGURE 32: Fit selector fork (16) on piston (14) and make sure selector fork orientation is correct.

NOTE:

Microswitch activation cam "A" must face upwards.

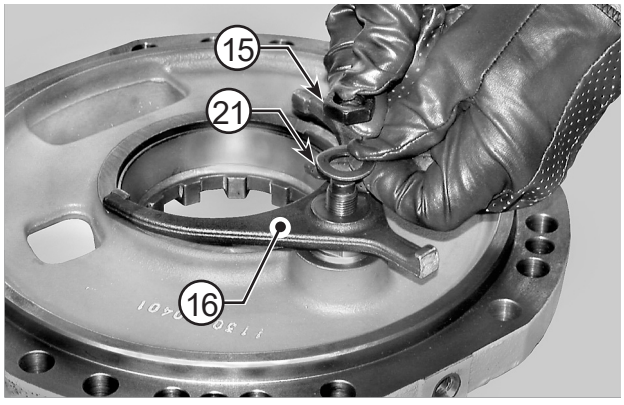

FIGURE 33: Secure selector fork (16) with washer (21) and nut (15).

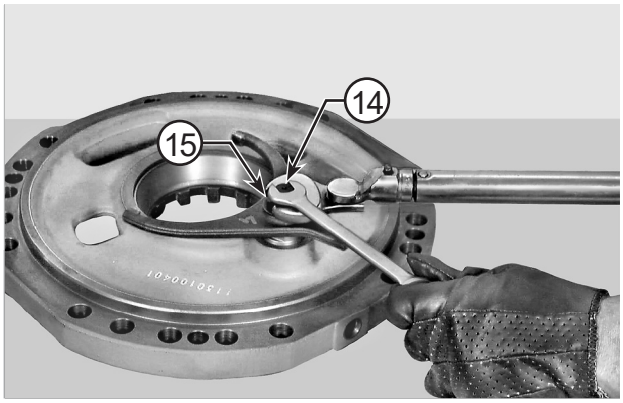

FIGURE 34: While holding piston (14) in position, tighten the nut (15) with a torque wrench to 225 - 230 N·m.

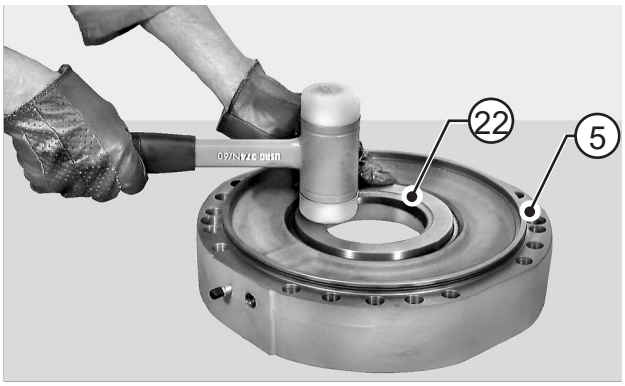

FIGURE 35: ASSEMBLING THE BRAKE PISTON Fit o-rings (23, 24) and anti-extrusion rings (39, 40) on piston (22).

Lubricate the seals and introduce piston (22) into cylinder (5).

NOTE:

Thoroughly check the position of anti-extrusion rings (39,

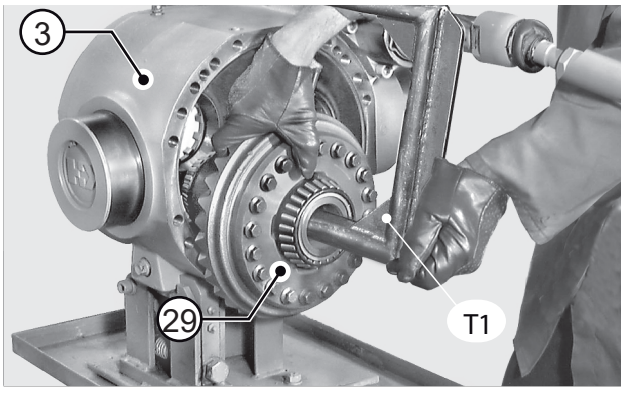

FIGURE 36: Using tool T1 (See drawing T1 p. 139), introduce the whole differential (3) into the main body (29).

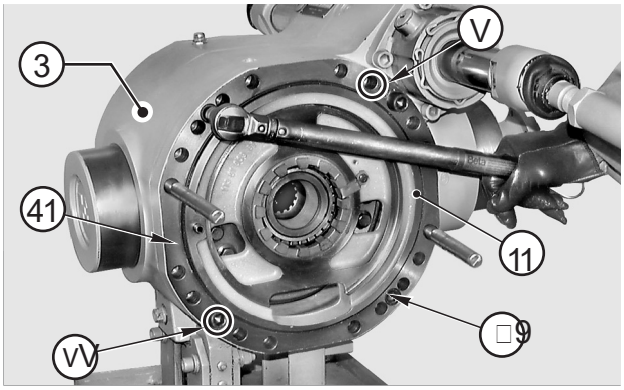

FIGURE 37: Tighten two safety studs in the main body (3) and install the intermediate cover (11).
Lock in position with screws "V" tightened to 130 - 143 N·m.

NOTE:

Check the condition of the o-ring (41).

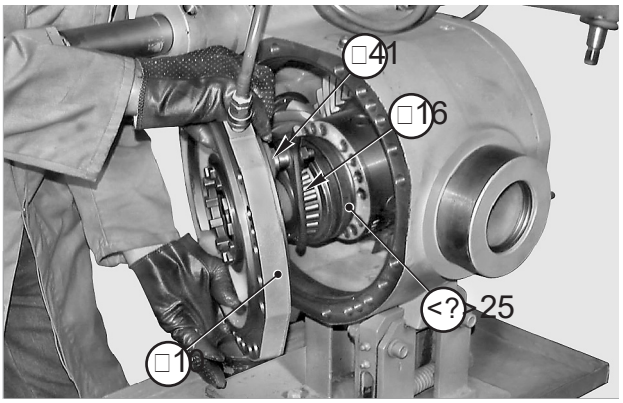

FIGURE 38: Introduce low-pressure compressed air through connection "B" and make sure that the lock control piston comes out at the end of stroke.
Rotate the intermediate cover (10) to an angle of about 45°; engage the selector fork (16) in the lock control coupling (25).

NOTE:

Check the condition of the o-ring (41).

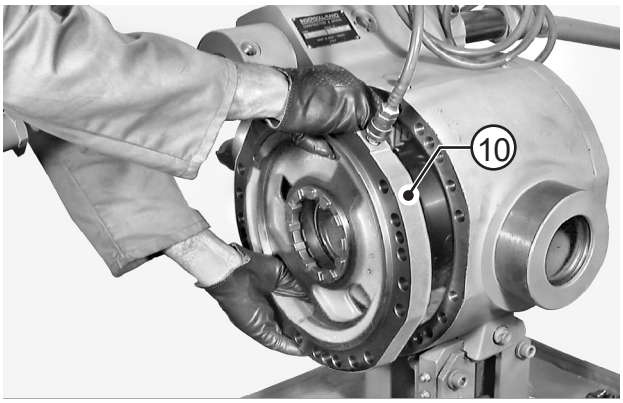

FIGURE 39: As you hold the selector fork in position (16), rotate the intermediate cover into its final position (10). To lock into position, tighten two safety studs "A" in two opposing holes.

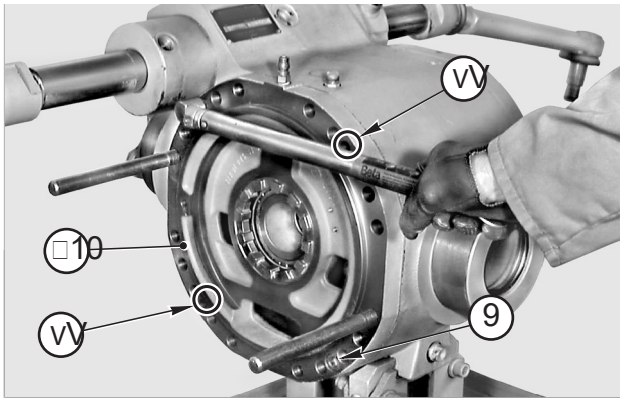

FIGURE 40: Clear any compressed air and finally move the intermediate cover (10) into its seat.
Lock into position with nuts "V" tightened to matching torque of 130 - 143 N·m.

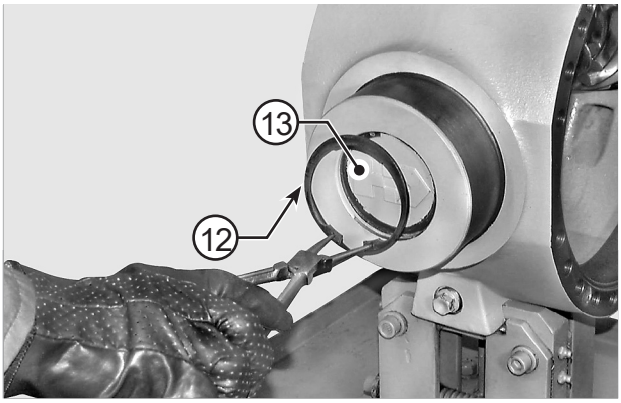

FIGURE 41: If necessary, adjust differential clearances. (See DIFFERENTIAL UNIT p. 103). Install the cap (13) and snap ring (12).

⚠CAUTION

MANDATORY PROCEDURE

Set the pliers following the correct procedure shown in END-STOP PLIER SETTING p. 15.

⚠WARNING

Personal injury can result when installing snap ring. The appropriate safety equipment must be worn. To avoid injury to your eyes, wear protective glasses during this procedure.

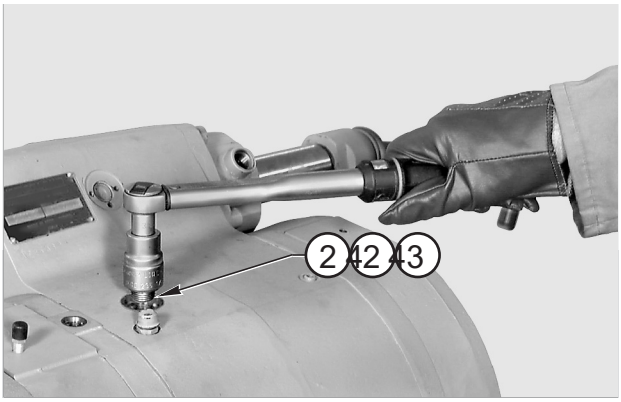

FIGURE 42: Fit the microswitch (2) complete with the o-ring (42) and the relative retainer ring (43).
Install the arms. (See BRAKE WEAR CHECK PROCEDURE p. 21).

SPECIAL TOOLS

T1

P/N: 2370

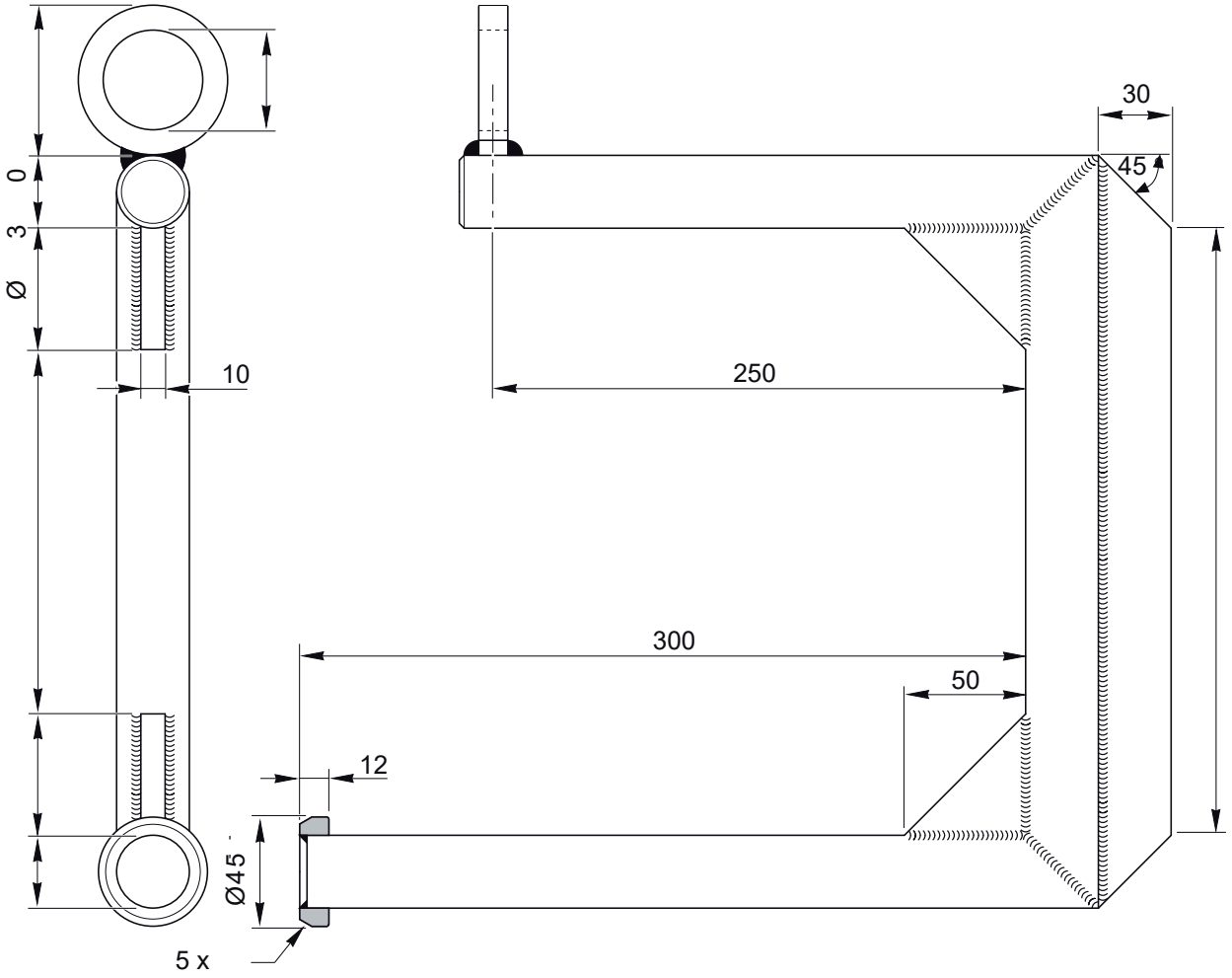

T2

P/N: 2376

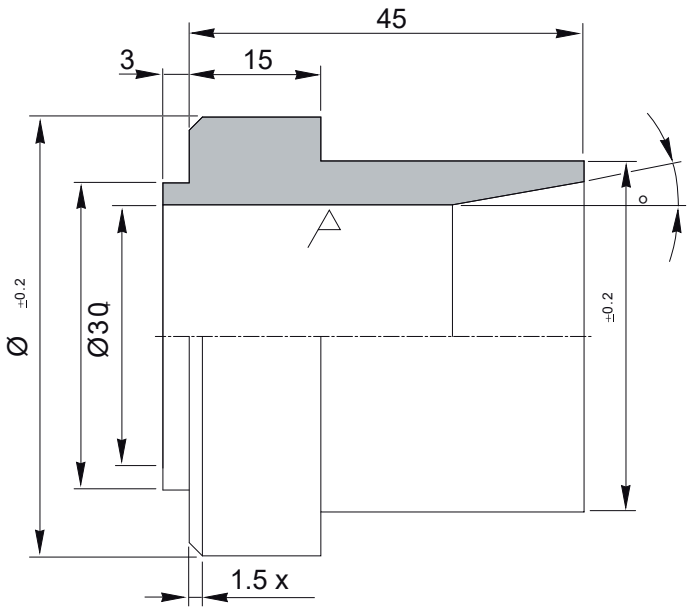

LIMITED SLIP DIFFERENTIAL UNIT

EXPLODED VIEW

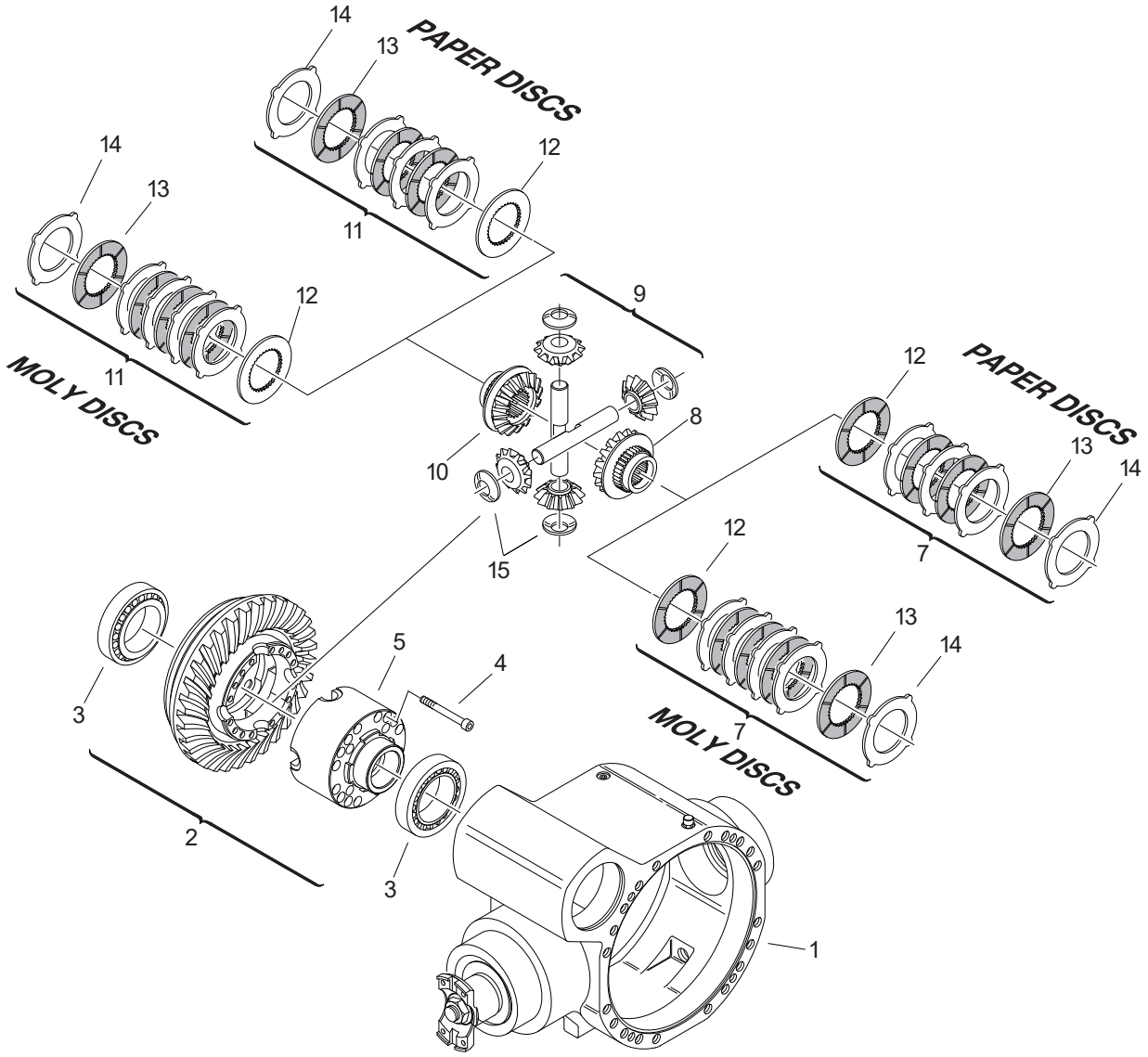

DISASSEMBLY

⚠CAUTION

Before draining oil, release the internal pressure, for details see OIL DRAINING MANDATORY PROCEDURE p. 14.

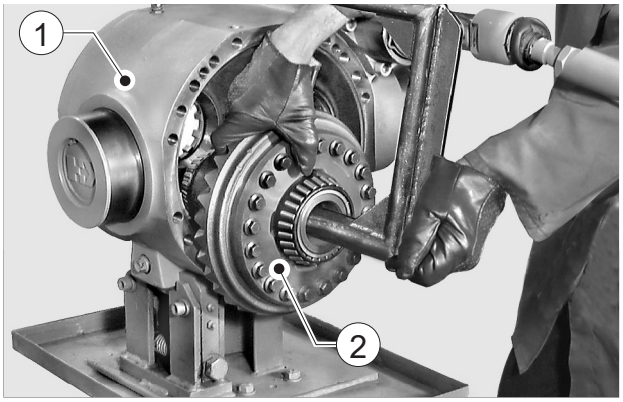

FIGURE 1: Remove the whole differential unit (2) from the main body (1).
(For details, see DIFFERENTIAL UNIT p.

⚠CAUTION

The following section includes clutch replacement procedures only; for gear ring replacement, see DIFFERENTIAL UNIT p. 103.

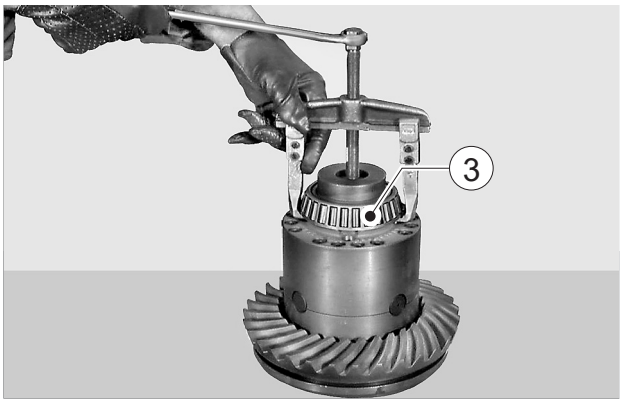

FIGURE 2: Using a puller, remove bearing (3).

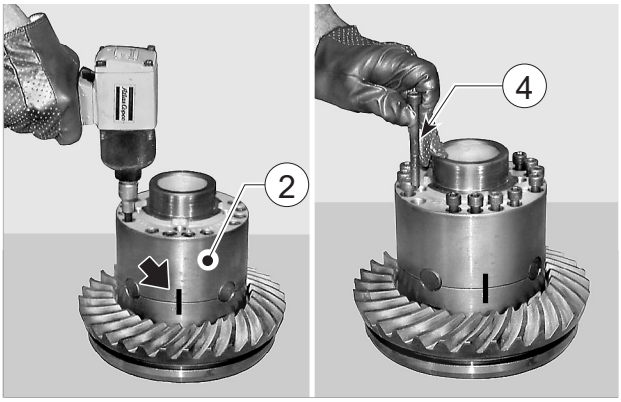

FIGURE 3: Make positional match marks on the half boxes of the differential gear (2); loosen and pull out joining screws

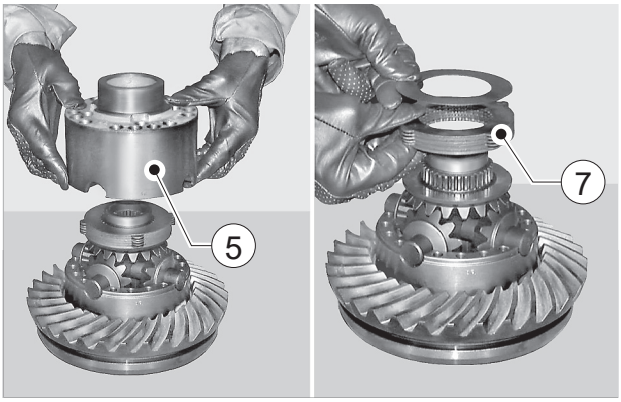

FIGURE 4: Remove the upper half box (5) and clutch pack

⚠CAUTION

Check and write down the amount of differential discs.
In function of this quantity deduce the type of material:
8 discs - friction material "PAPER" 10 discs - friction material "MOLY"

⚠CAUTION

If the clutch pack does not need replacing, avoid swapping discs position.

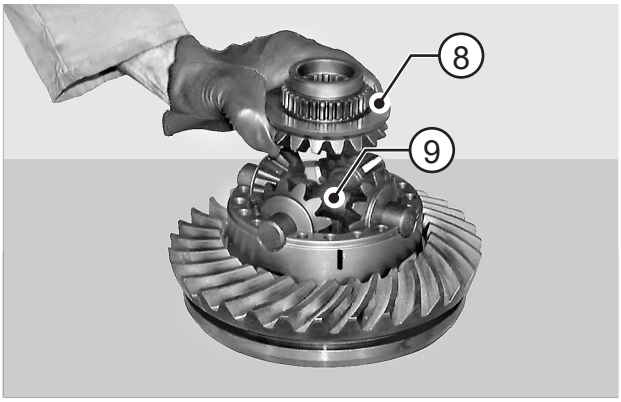

FIGURE 5: Remove the crown wheel (8) and planetary gears set (9).

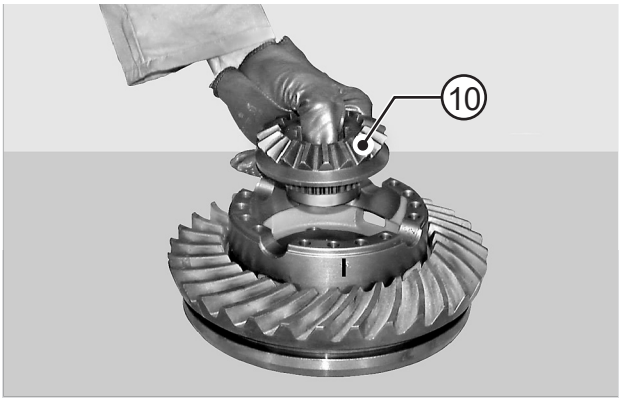

FIGURE 6: Remove the 2nd planetary gear (10).

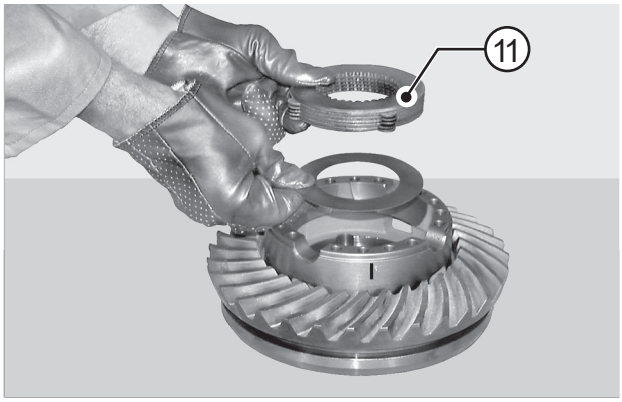

FIGURE 7: Remove the 2nd clutch pack (11) .

⚠CAUTION

Check and write down the amount of differential discs.
In function of this quantity deduce the type of material:
8 discs - friction material "PAPER" 10 discs - friction material "MOLY"

⚠CAUTION

If the clutch pack does not need replacing, avoid swapping discs position.

ASSEMBLY

“MOLY” FRICTION DISCS

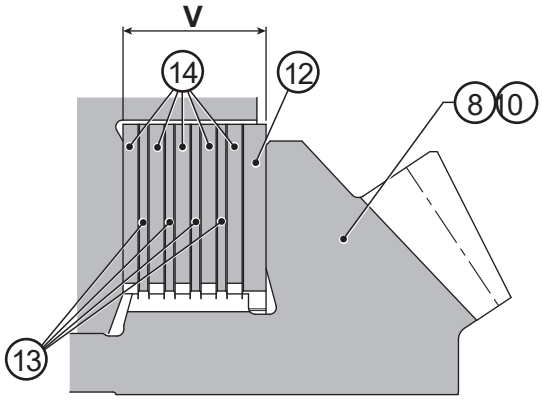

FIGURE 8: Check the disc pack thickness “V” applying 3000 N ± 5%.
“V” measurement must be 17,4 ± 0,08 mm.

⚠CAUTION

Dip the complete disc pack in oil (with LS additive) at least one hour before to assembly, for details about oil see OIL DRAINING MANDATORY PROCEDURE p. 14.

NOTE:
Check the total dimension of the disc pack before installing, if this measurement does not respect the predifined value install a new disc pack.
New disc pack doesn’t need measurement, because, supplied as subassembly, they already respect the predifined value.
It is mandatory to install discs of the same material of the original installation.

“PAPER” FRICTION DISCS

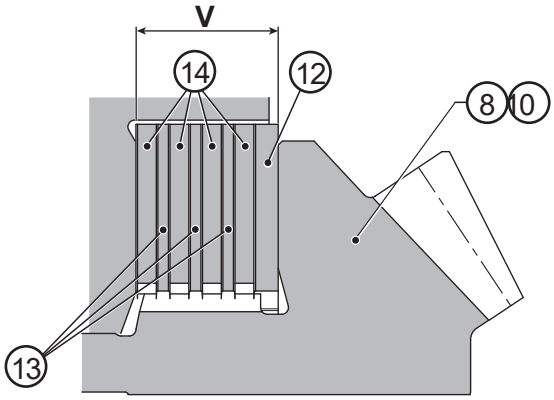

FIGURE 9: Check the disc pack thickness “V” applying 3000 N ± 5%.
“V” measurement must be 17,35 - 17,50 mm.

⚠CAUTION

Dip the complete disc pack in oil (with LS additive) at least 24 hours before to assembly, for details about oil see OIL DRAINING MANDATORY PROCEDURE p. 14.

NOTE:
Check the total dimension of the disc pack before installing, if this measurement does not respect the predifined value install a new disc pack.
New disc pack doesn’t need measurement, because, supplied as subassembly, they already respect the predifined value.
It is mandatory to install discs of the same material of the original installation.

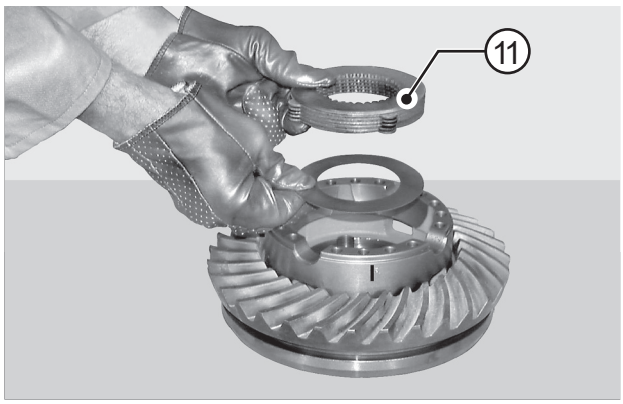

FIGURE 10: Fit the clutch pack (11) in the half-box.

⚠CAUTION

When installing the increased shim, place shim so that it leans against the crown wheel (8, 10).

11.2.Transmission Assembly

The disassembly/assembly procedures have been outlined for a total product overhauling. They have also been described in sequence through photographs with relevant explanation for specific interventions, thus obtaining a complete and safe guide for each and every phase of an operation.

Operation description presumes that the transmission has already been removed from the vehicle. To remove the transmission from the vehicle *Refer to Section Removal and Assembly*.

The machine should be checked and/or repaired only by qualified technicians, acquainted with its peculiar features and well aware of all safety instructions.

Before performing any operation it is advisable to carry out unit cleaning accurately by removing oil/ grease encrustations and accumulation.

All disassembled mechanical parts must be cleaned accurately with suitable products to avoid possible damage. Parts should be replaced if damaged, worn out, cracked, seized, etc. as they could affect proper working. Rotating parts (bearings, gears, shafts) and that of hardware/fasteners (O-Rings, seal rings) should be examined carefully, as they are subject to intense stress, wearing and aging.

Note: in case of replacement of one part of the bevel gear set this operation requires the replacement of the other part too.

WARNING

We highly advise to replace sealing parts (O-Rings, seal rings, gaskets) during every tear-down or repair.

Use appropriate spare parts, nuts and bolts to avoid any other problems. Moreover, use metric tools for metric nuts and bolts and Imperial tools for the others.

Some operations are destructive for removed components. Carefully reading and through understanding of these instructions will avoid damage to other components.

Special Recommendation

Before starting any disassembly and assembly operations, read carefully the following recommendations.

Shafts seals

Respect the following recommendations during shaft seal assembly:

- Clean shaft very carefully and ensure that the part in contact with the shaft seal is not damaged, cut or out of roundness.
- Do not damage the seals while assembling the shaft.
- Clean shaft very carefully and ensure that the part in contact with the shaft seal is not damaged, cut or out of roundness (**Fig. 1**).

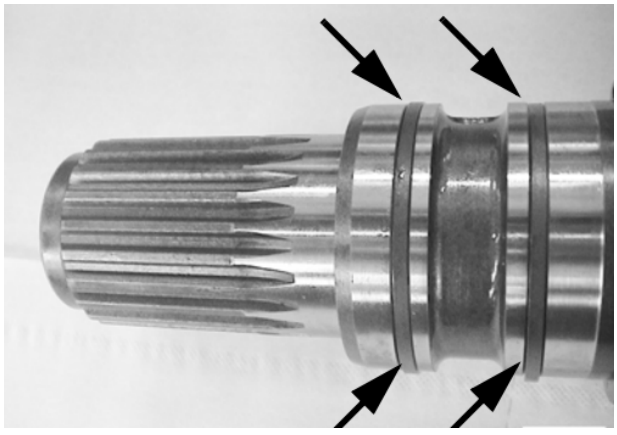

Figure-1 **Figure-2**

- Assemble the seals so that the lip is fitted towards the oil side (**Fig. 2**).
- Lubricate seal lips (use oil) and fill 3/4 of seal cavity with grease (**Fig. 3**).
- Use appropriate drivers (**Fig. 4**). Important: do not use a hammer directly on the seals.

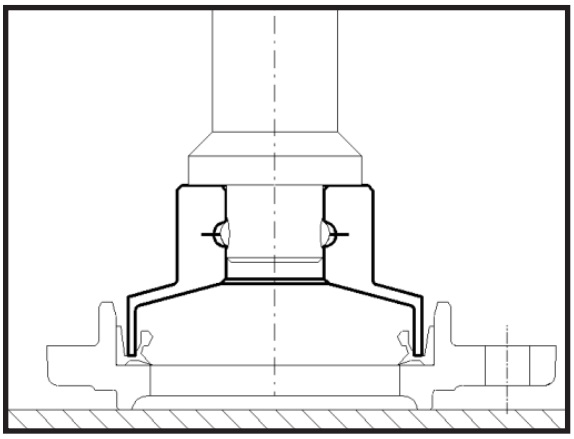

Figure-3 **Figure-4**

O-rings

Lubricate adequately before inserting them at the right place and avoid o-ring rolling while inserting the shaft (**Fig.5**).

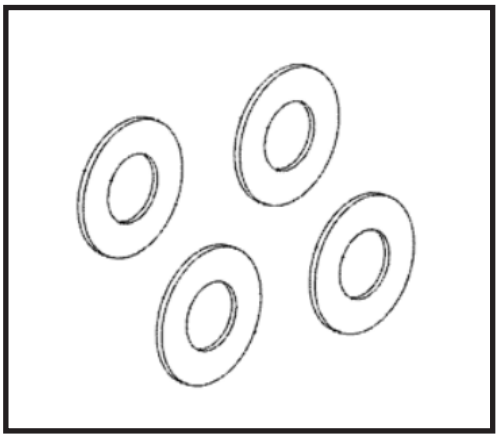

Figure-5 **Figure-6**

Adjusting shims

Respect the following recommendations during the adjustment shims assembly:

- Use appropriate adjusting shims and measure each one separately (**Fig. 6**).
- Complete group measurement or stampings on the shims are not always reliable: check.

Bearings

Respect the following recommendations during the bearings assembly:

- Before reassembling the bearings, clean, check and lubricate them.
- Its advisable to heat up bearings to 176-194 °F (80-90 °C) before assembling them onto their respective shafts or to cool them (dry ice) before inserting them into corresponding bore (**Fig. 7**). Always use suitable extractors to remove the bearings (**Fig. 8**).

Figure-7

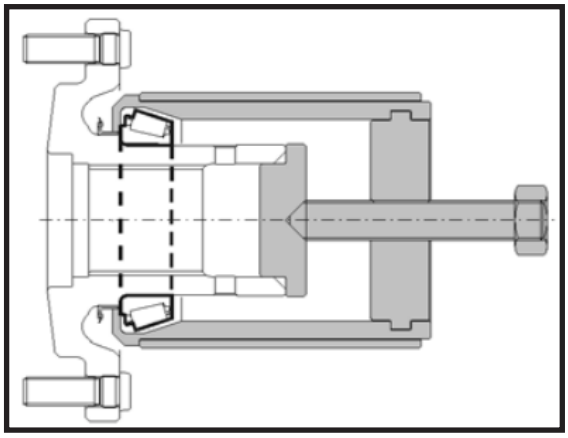

Figure-8

Split pins

Respect the following recommendations during the split pins assembly:

- Before assembling elastic pins, make sure that the pin notch is oriented towards the stressing force (**Fig. 9**).
- Spiral elastic pins do not need orientation.

Figure-9

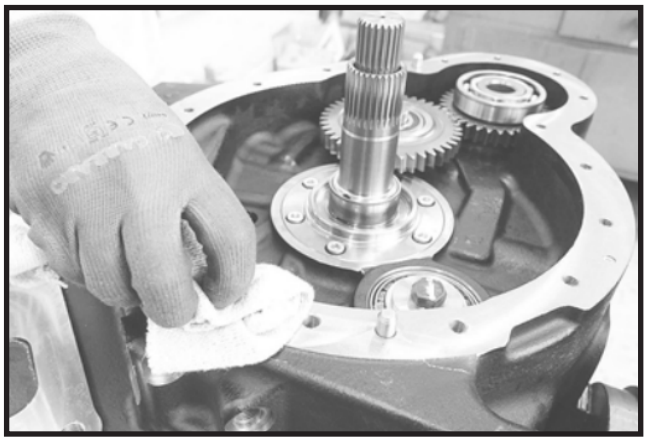

Figure-10

Adhesive and sealant

Respect the following recommendations during the adhesive and sealant application:

- Use adhesive and sealant as advised by manufacturer specifications.
- Do not use adhesive or sealant where similar products has been applied previously; totally remove the old product before applying the new one.
- Ensure that parts to be sealed are clean, dry and completely grease free (**Fig. 10**) in the application area.
- Read the predisposed section in this manual to know the required type of adhesive and sealant and relative application areas.

Oil Drain

Before carry out the disassembly operations, the oil must be drained out.

¡	**CAUTION**
Dispose of used oil in compliance with current environment regulations.	

- **Cleaning**
- Gasoline and watery alkaline solutions are forbidden.
- Do not wash with steam or hot water, as it will be very difficult to eliminate surface humidity.
- Dry all parts with a rag or air jet to avoid scratching from abrasive residuals.
- After the cleaning operations, all the surfaces should be covered with lubricant so as to protect it from future oxidation.

Checks

Respect the following recommendations during the transmission control operations:

- Check all grooves: assure that they are not worn out or damaged.
- Replace spoiled parts with original spare parts.
- Before the reassembly, the seals on rotating shafts must be replaced.
- Examine accurately all bearings, external rings which may be still stuck in their position and pivot pins on which rolls rotate.
- Replace those which are worn out or damaged (**Fig. 11**).
- Gears should not be spoiled and teething should not be excessively worn out. Teeth smoothing should not be deteriorated (**Fig. 12**).

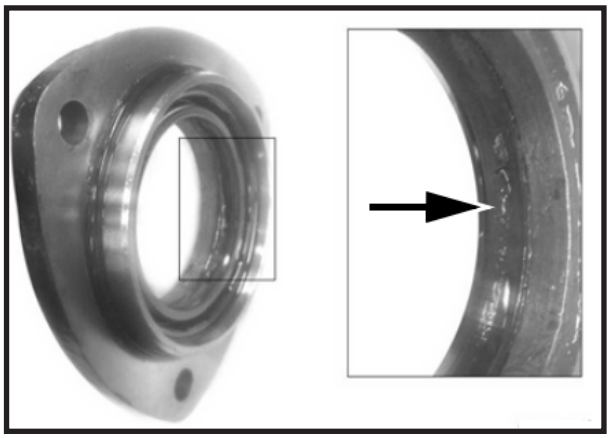

Figure-11

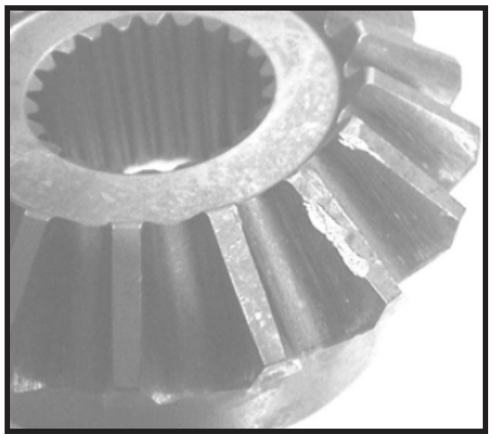

Figure-12

Ends of flanges and special tools

Be careful when hammering special tool or flange ends, in order to avoid jeopardizing functionality and integrity of either the tools or the components on which you are operating.

Lubricant use

In order to lubricate the CARRARO DRIVE TECH SpA transmissions correctly and to reach the exact operation temperature, it is important to use the recommended lubricants, keeping their level constant as indicated in this manual.

Transmission installation on the machine.

It is recommended to fit by hand the converter on the transmission TLB, then connect transmission and converter assembly to machine motor flywheel using the flex plate screws and the SAE 3 motor bell-housing screws.

Torque Converter

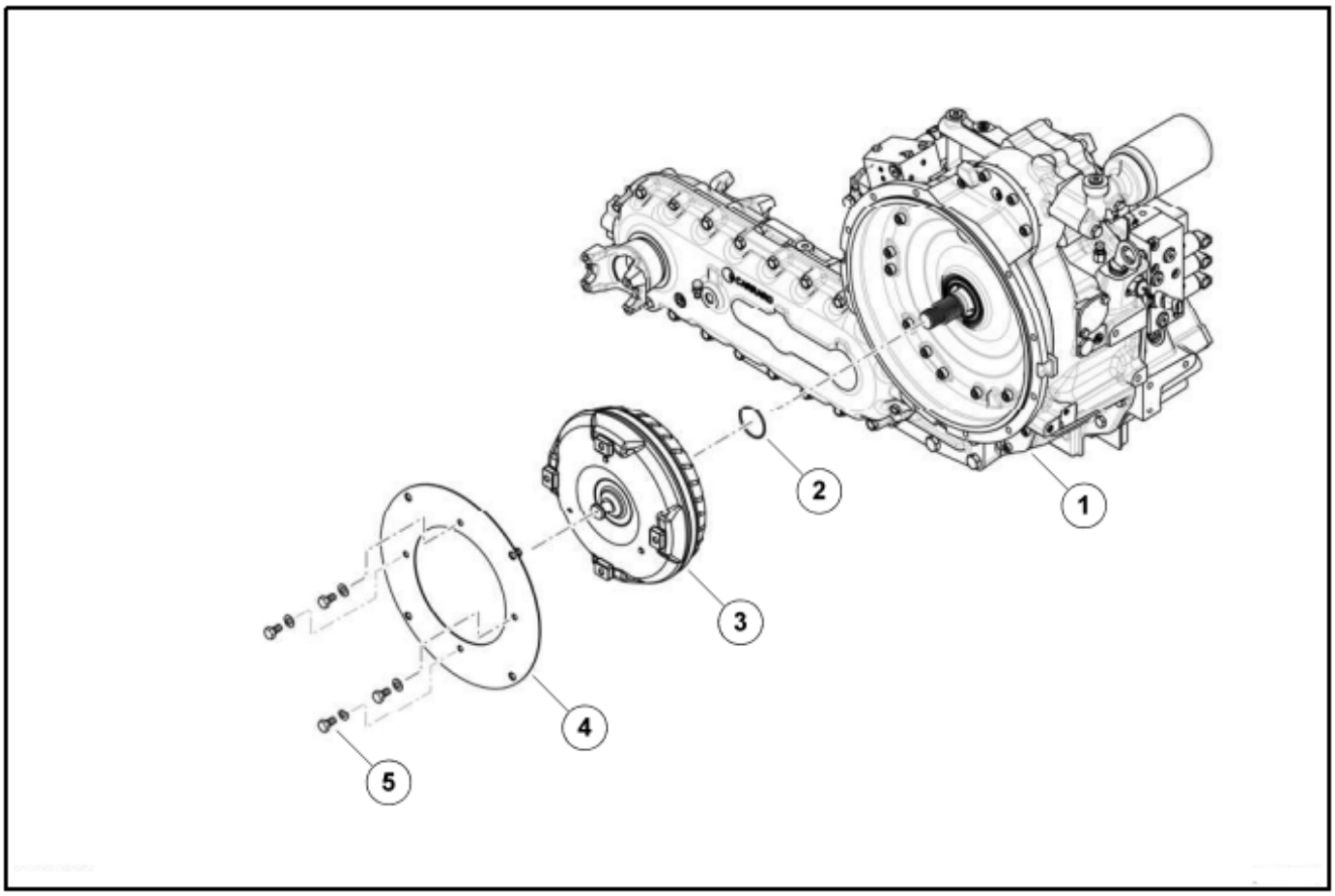

Assembly

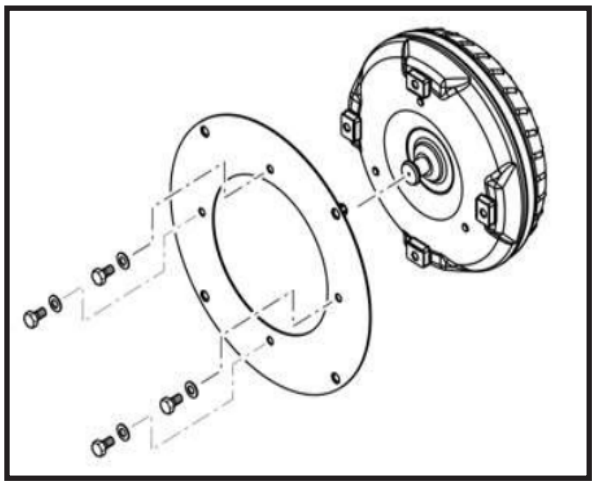

FIGURE 1: Assemble the flywheel towing plate (**4**) to converter (**3**) with bolts (**5**) and relative washers, as shown in figure.

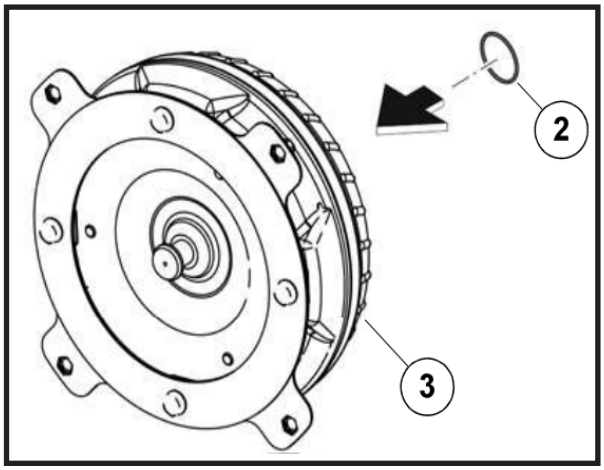

FIGURE 2: Lubricate and assemble new O-Ring (**2**) to the converter (**3**).

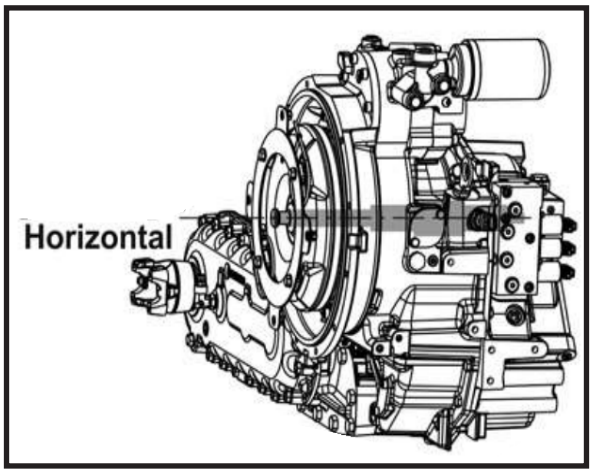

FIGURE 3: It's recommended to install the transmission on the appropriate special stand supplied by CARRARO.

WARNING

Accidental fall of transmission heavy parts can result in serious injury to the operator; verify that the support is stable and correctly anchored, check that the whole transmission group is securely fastened to the support. Assemble the converter (**3**) to transmission (**1**).

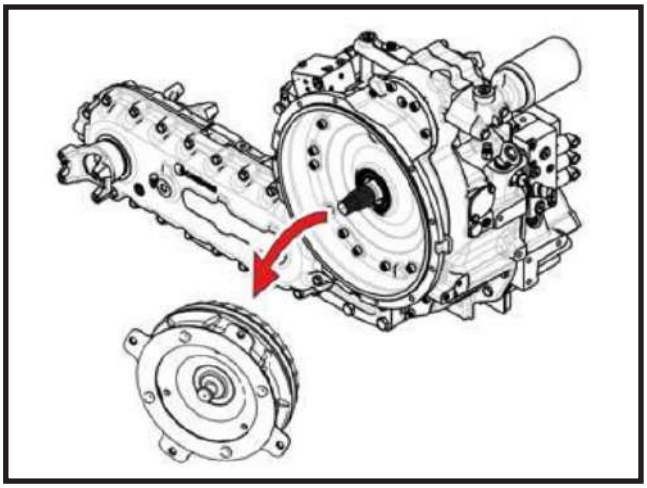

FIGURE 4: **Important**: keep horizontal the converter axis after assembly; torque converter may drop when assembling transmission to vehicle engine.

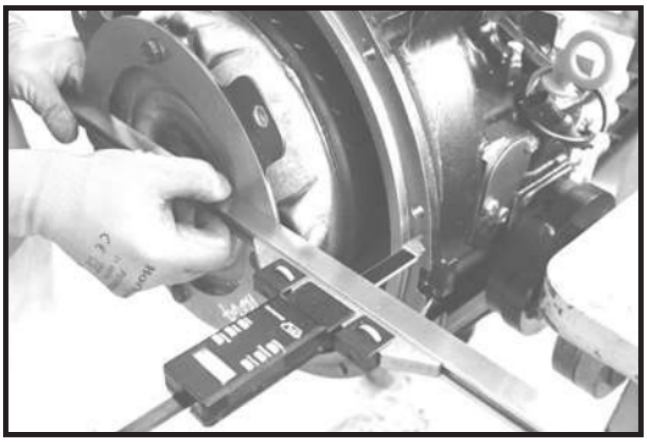

FIGURE 5: To check correct assembly of converter, measure the distance shown in the figure, which must be approximately 2,4 in (61.8 mm).

Disassembly

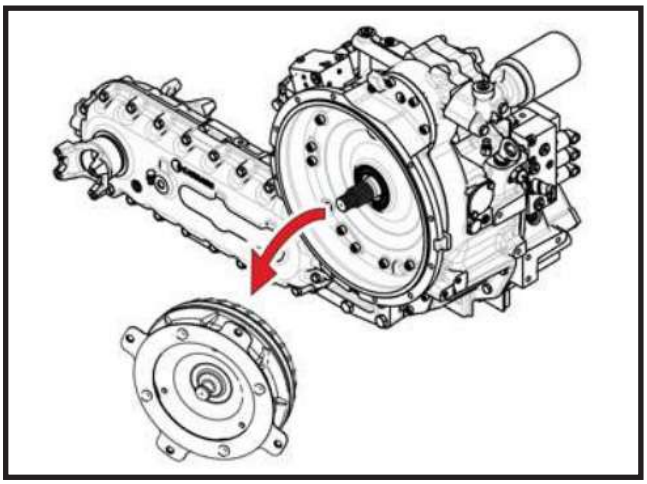

FIGURE 1: **Important**: the torque converter is not secured to transmission group but freely coupled to a grooved shaft; torque converter may drop when separating transmission from vehicle engine.

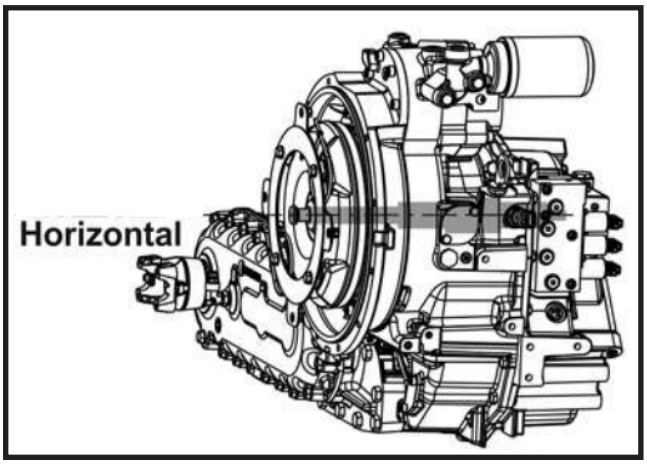

FIGURE 2: **DANGER** Accidental fall of transmission or heavy parts can result in serious injury to the operator; verify that whole group is properly and safely supported.

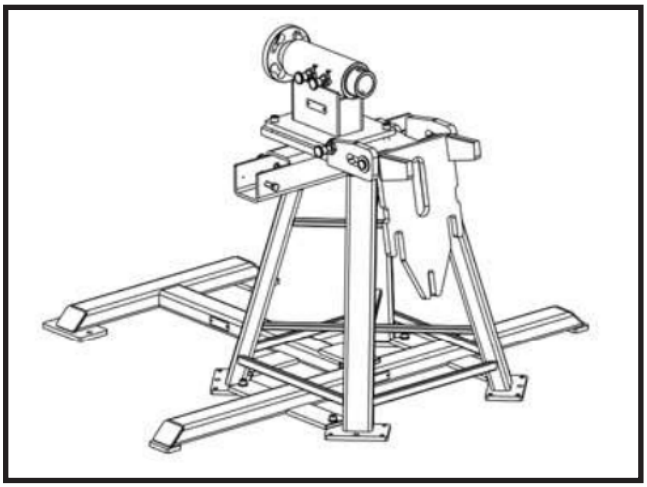

FIGURE 3: It's recommended to install the transmission on the appropriate special stand supplied by CARRARO.

Accidental fall of transmission heavy parts can result in serious injury to the operator; verify that the support is stable and correctly anchored, check that the whole transmission group is securely fastened to the support.

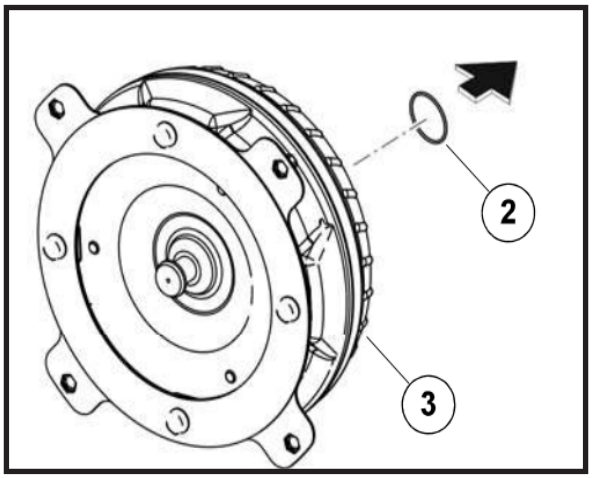

FIGURE 4: Remove the O-Ring (**2**) from converter (**3**).

Note: destructive operation for the O-Ring; the O-Ring must be replaced.

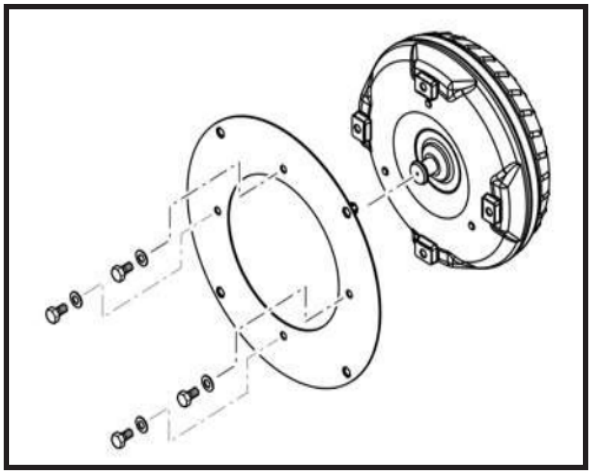

FIGURE 5: Remove the bolts (**5**) to disassemble the flywheel towing plate (**4**).

Transfer Box TB42

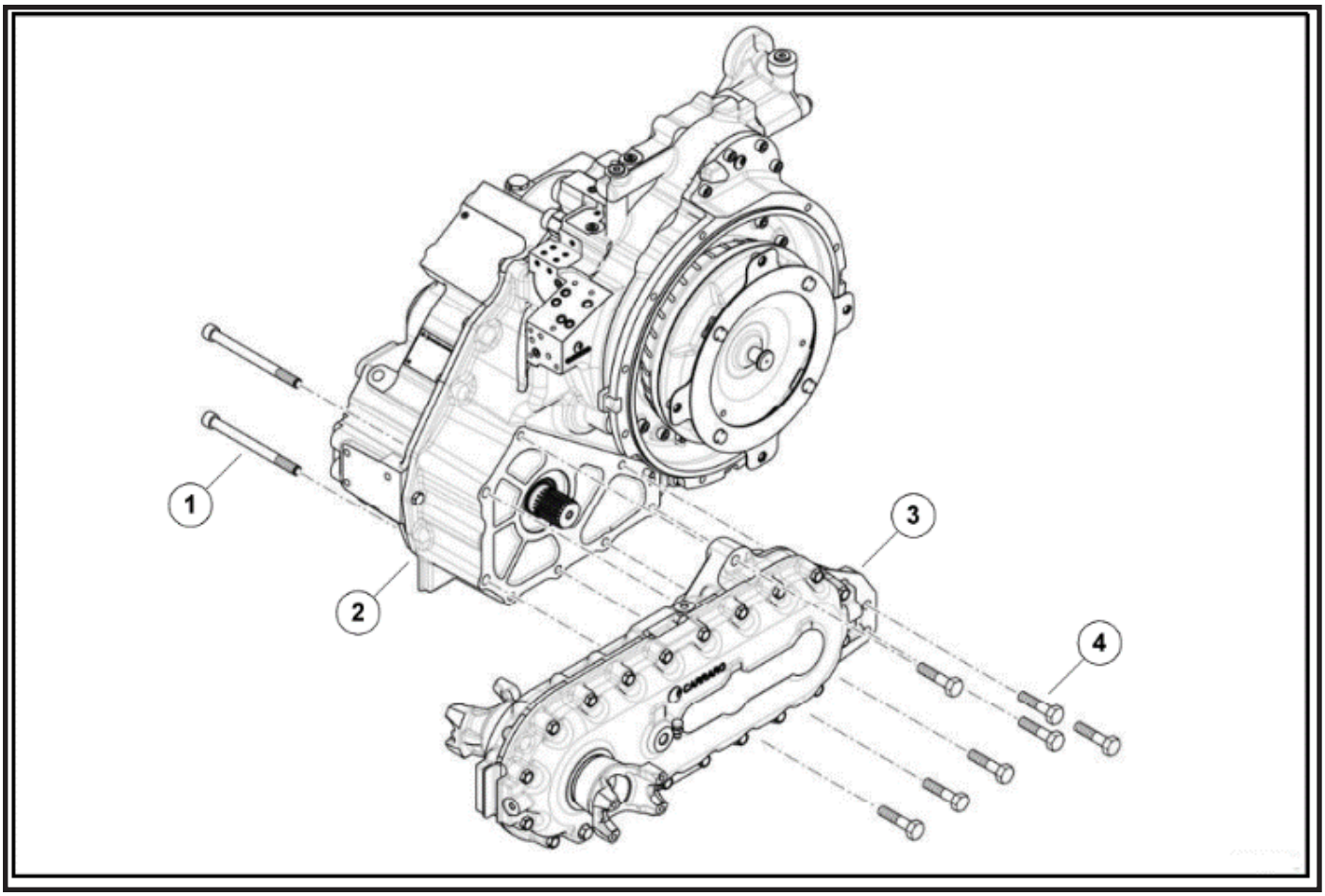

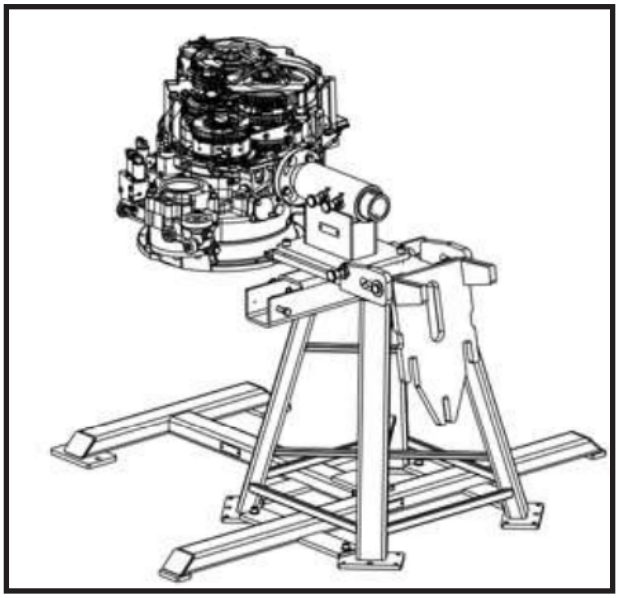

FIGURE 1: Install the transmission on the appropriate special stand.

WARNING

Accidental fall of transmission heavy parts can result in serious injury to the operator; verify that the support is stable and correctly anchored, check that the whole transmission group is securely fastened to the support.

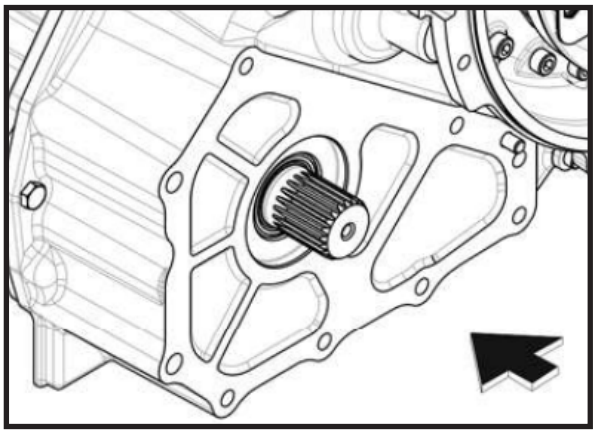

FIGURE 2: Clean with care the TB seat on the transmission housing (**2**). Apply the prescribed sealant on the coupling surface.

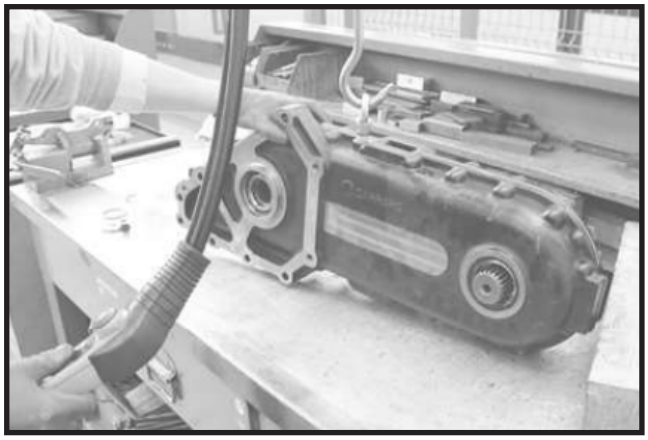

FIGURE 3: Hook the TB (**3**) to a lifting system which allows easy handling. Clean with care the coupling surface. Apply the prescribed sealant on the coupling surface.

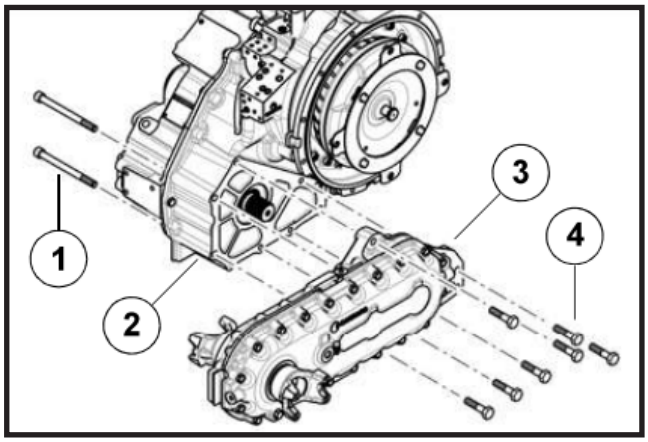

FIGURE 4: Assemble the TB (**3**) on the transmission housing (**2**).

Assemble the 7 short bolts (3) on front side. Assemble the 2 long bolts (**1**) on rear side.

Tighten the bolts to prescribed torque.

TB427 Assembly

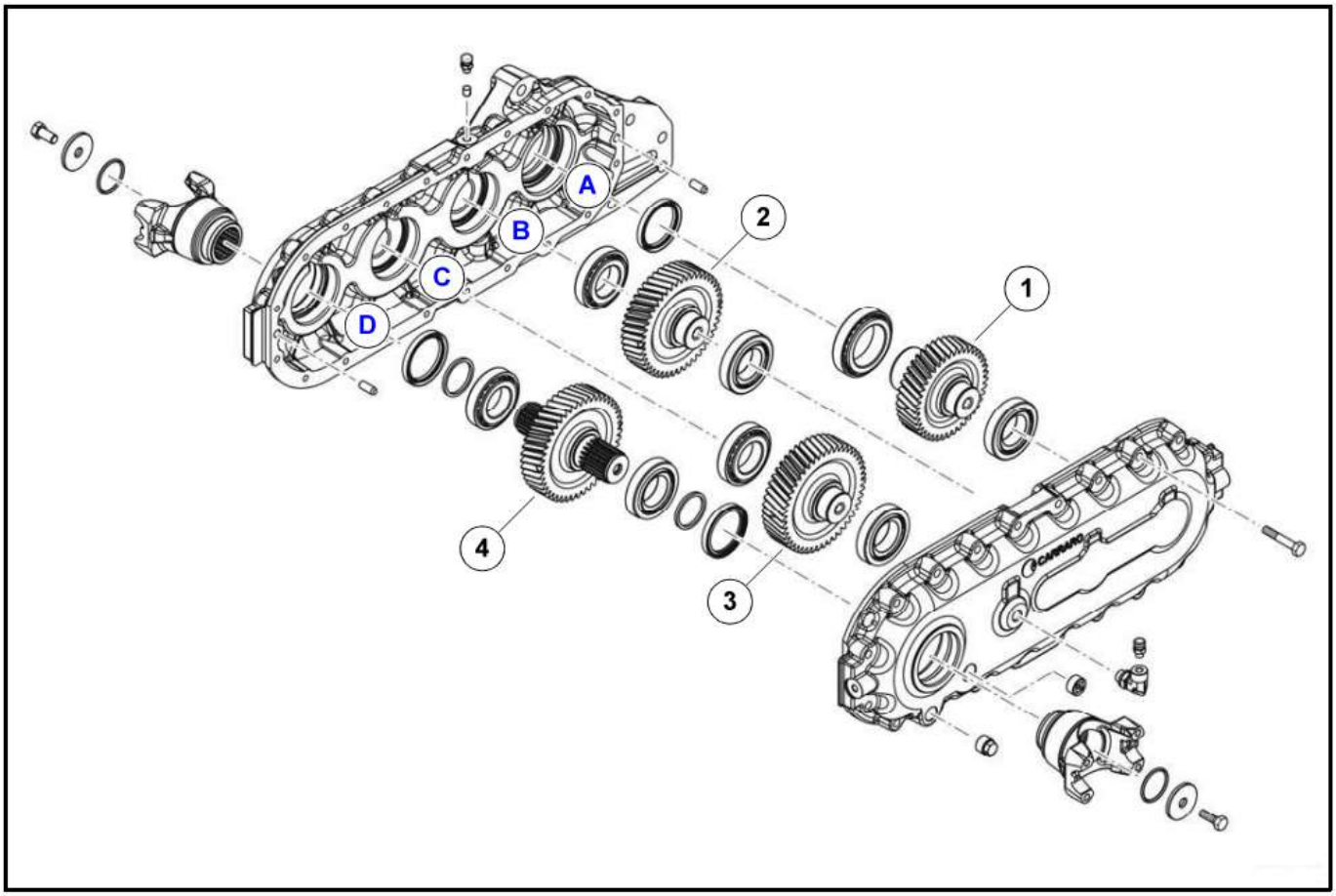

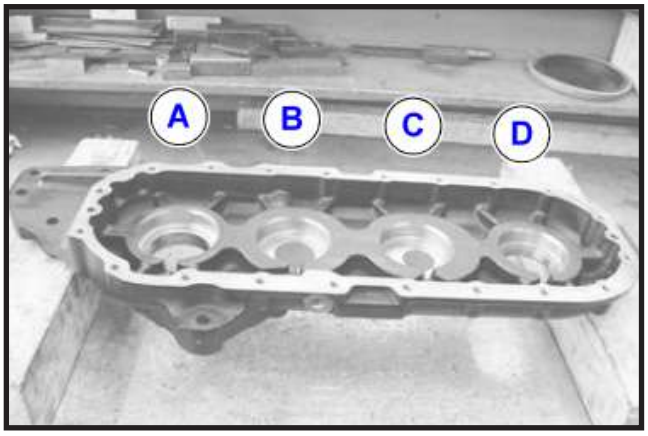

FIGURE 1: Place on the work bench the shown half-housing. Clean with care the bearing seats. Note: The figure shows the position of the axes A, B, C, D of different shafts.

FIGURE 2: Cool the bearing cups in liquid nitrogen.

CAUTION Burn Hazard; wear safety protections required by current safety regulations.

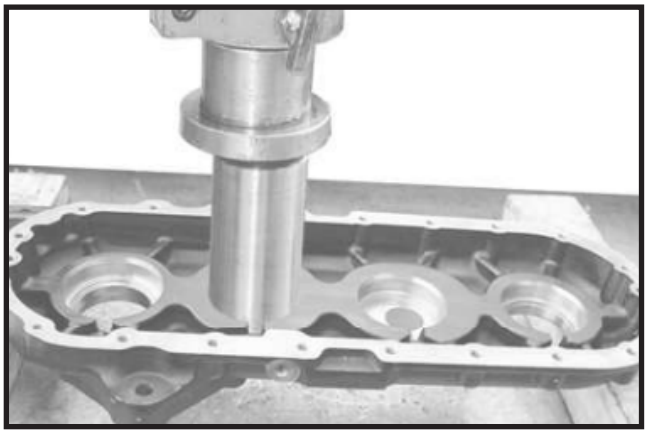

FIGURE 3: **Note**: it is possible to install the bearing cups without cooling using a press and suitable driver

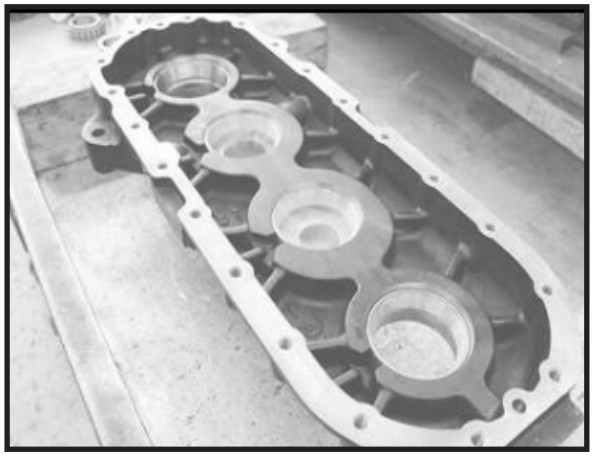

FIGURE 4: Assemble the bearing cups in the half-housing. Note: orient the bearings cups as shown; push bearings cups to the end.

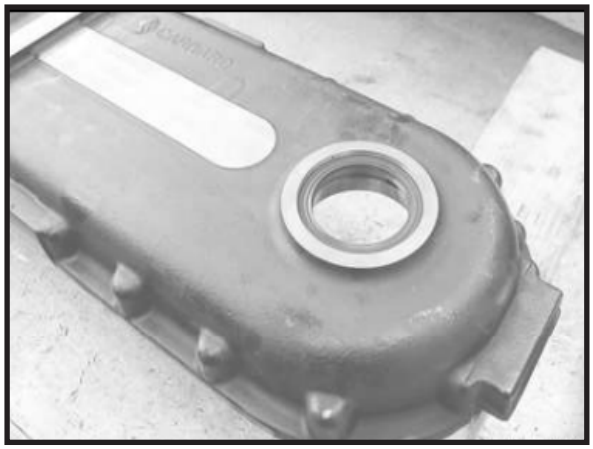

FIGURE 5: Assemble a new seal ring in shown position, using a suitable driver and hammer. See: Special Tools in Product Data.

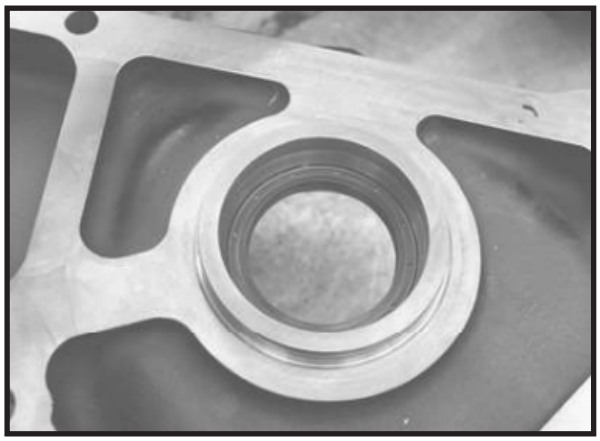

FIGURE 5: Assemble a new seal ring on the other side of the half-housing, using a suitable driver and hammer. See: Special Tools in Product Data

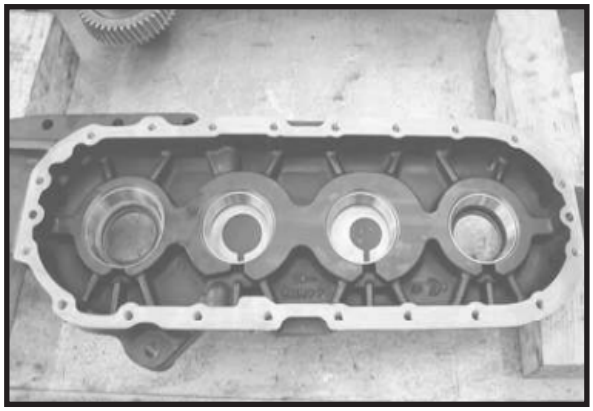

FIGURE 6: Overturn the half-housing to assembling gear/bearings groups.

FIGURE 8: Place on the work bench the gear shown in figure.

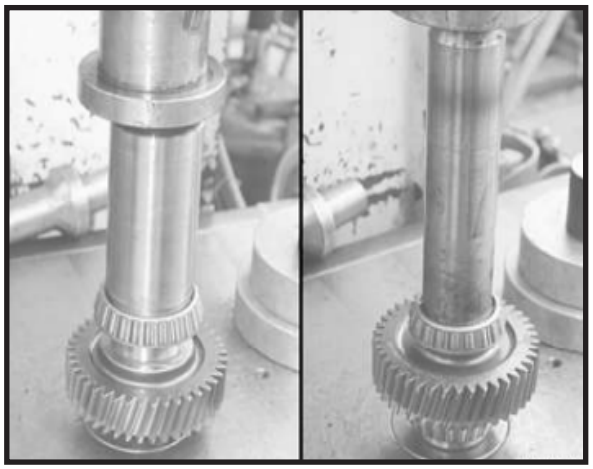

FIGURE 9: As shown, assemble the tapered bearings using a press with suitable driver. See: orient the bearings as shown.

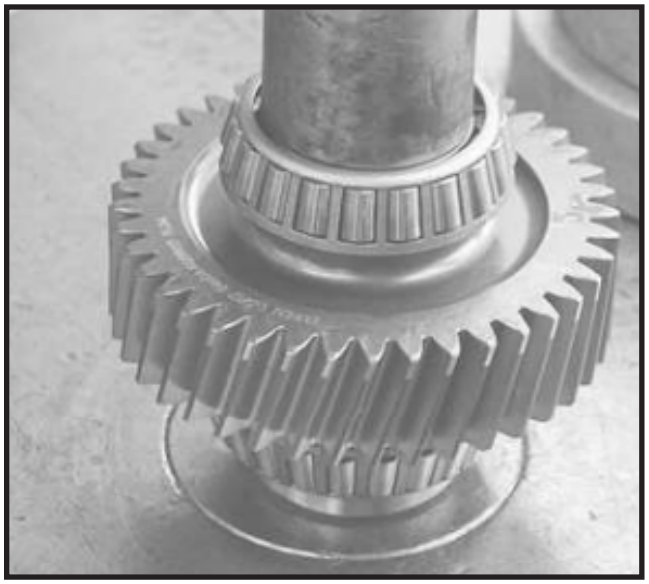

FIGURE 10: Detail of bearing assembly. Note: push both bearings to the end.

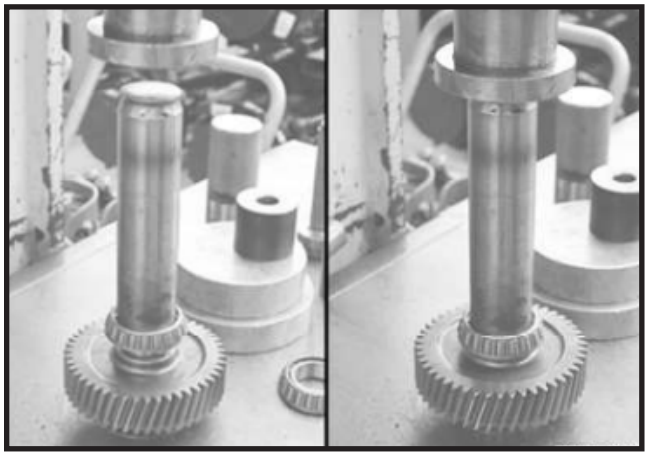

FIGURE 11: Assemble the tapered bearings on the intermediate gears, using a press with suitable driver. See: orient the bearings as shown.

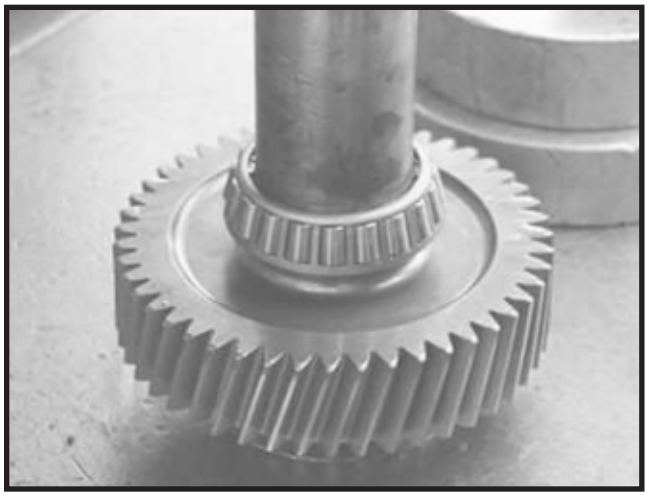

FIGURE 12: Detail of bearing assembly.

Note: push both bearings to the end.

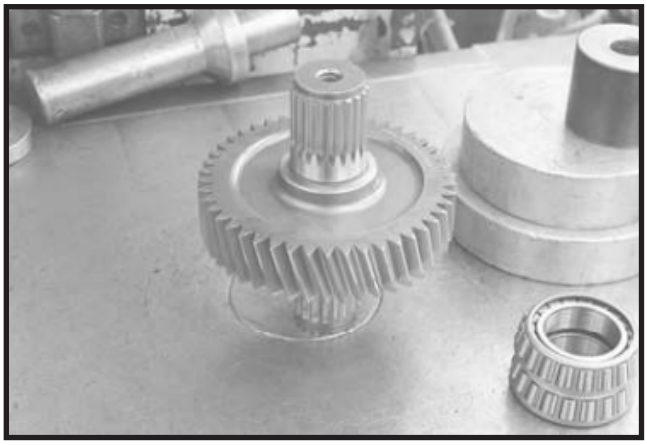

FIGURE 13: Place on the work bench the gear with splined shafts and relative tapered bearings.

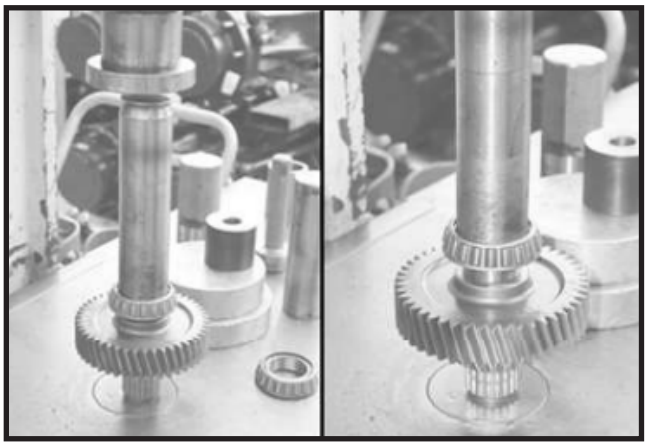

FIGURE 14: As shown, assemble the tapered bearings using a press with suitable driver.

See: orient the bearings as shown.

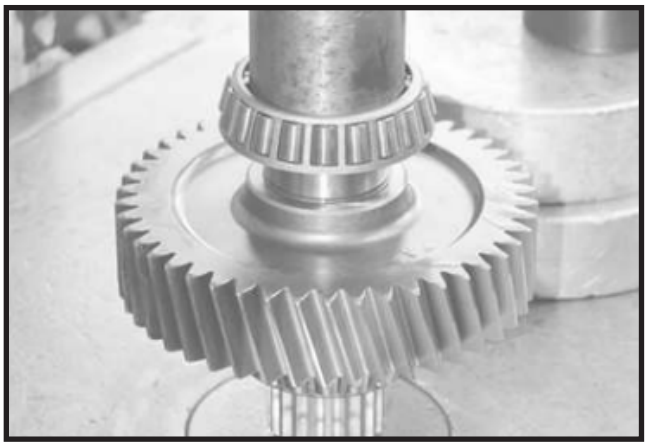

FIGURE 15: Detail of bearing assembly.

Note: push both bearings to the end.

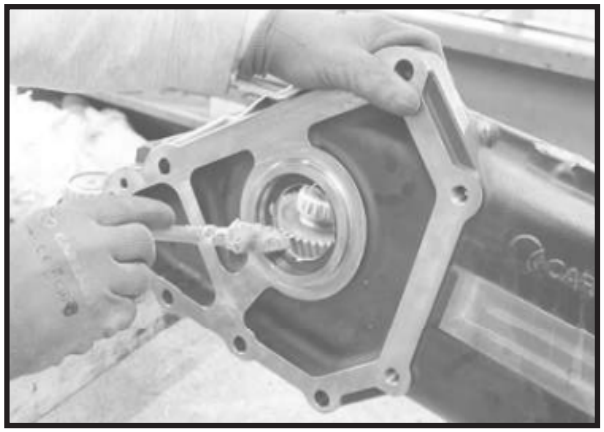

FIGURE 16: Lubricate the seal rings with prescribed grease.

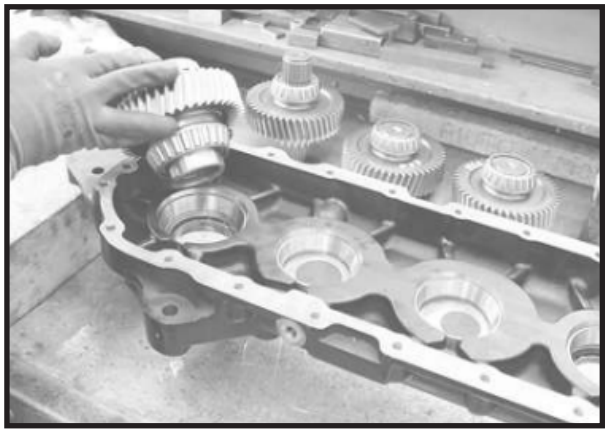

FIGURE 17: Assemble the first group gear/bearings. Note: gear with 41 teeth on axis A.

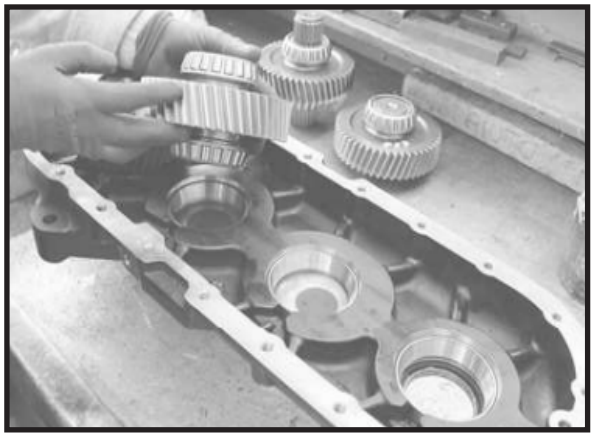

FIGURE 18: Assemble the first intermediate group gear/bearings. Note: gear with 46 teeth on axis B.

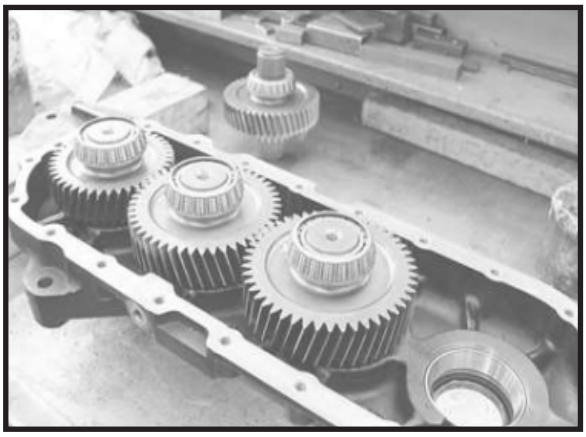

FIGURE 19: Assemble the second intermediate group gear/bearings. Note: gear with 47 teeth on axis C.

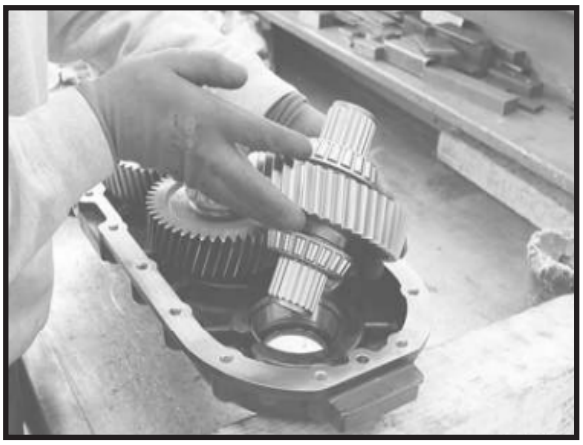

FIGURE 20: Assemble the group gear/bearings with splined end. Note: gear with splined ends and with 46 teeth on axis D.

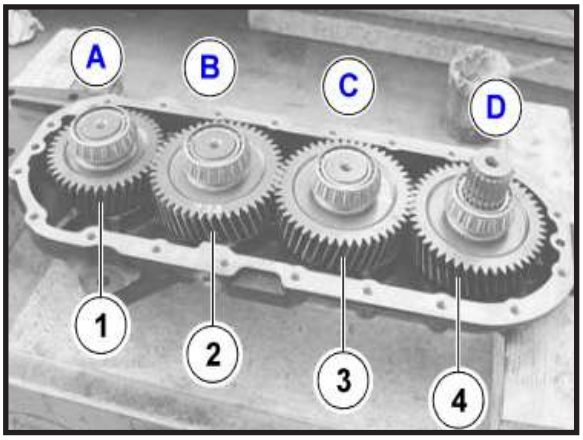

FIGURE 21: Check that all gears are correctly coupled.

See: main scheme

FIGURE 22: Cool the bearing cups for second half-housing in liquid nitrogen.

CAUTION Burn Hazard; wear safety protections required by current safety regulations.

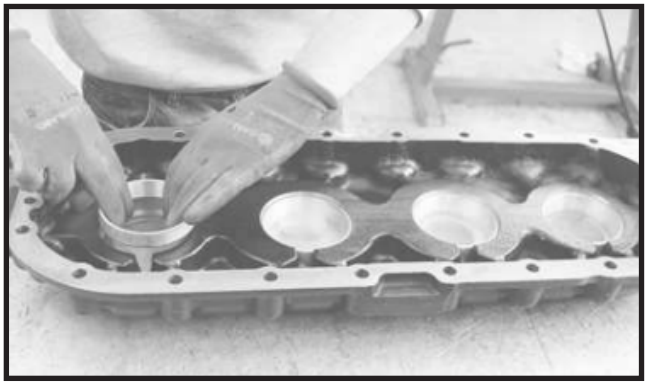

FIGURE 23: Assemble the bearing cups in the half-housing. **Note**: it is possible to install the bearing cups without cooling using a press and suitable driver.

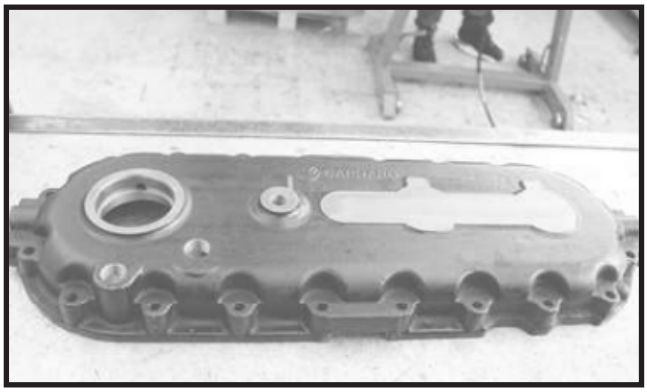

FIGURE 24: Overturn the half-housing and clean with care the seal ring seat.

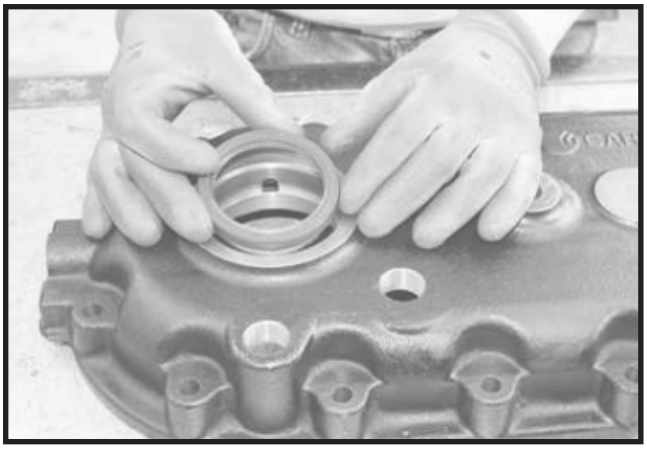

FIGURE 25: Place a new seal ring in shown position.

FIGURE 26: Assemble the new seal ring using a proper driver and hammer. See: Special Tools in Product Data.

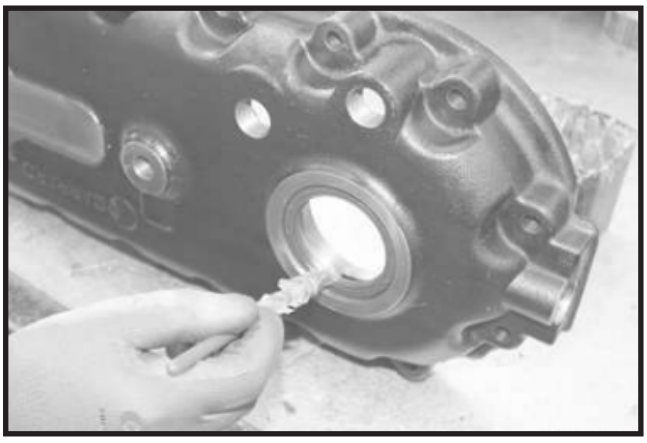

FIGURE 27: Lubricate the seal ring with prescribed grease.

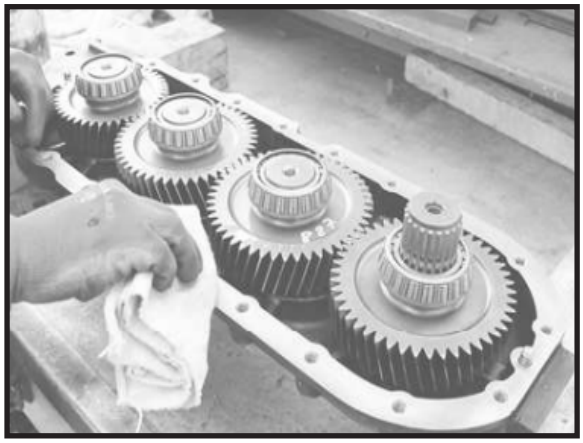

FIGURE 28: Clean with care the coupling surface on the first half-housing.

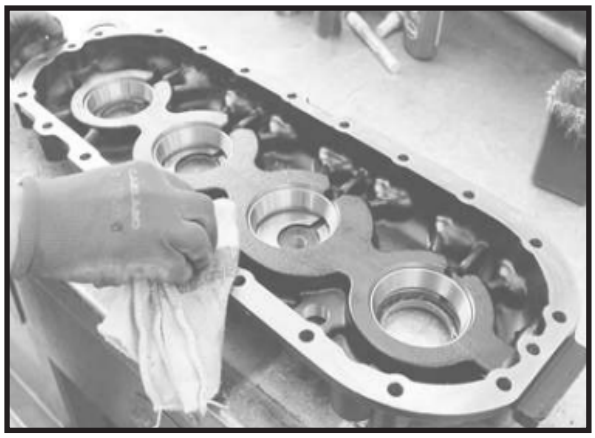

FIGURE 29: Clean with care the coupling surface on the second half-housing.

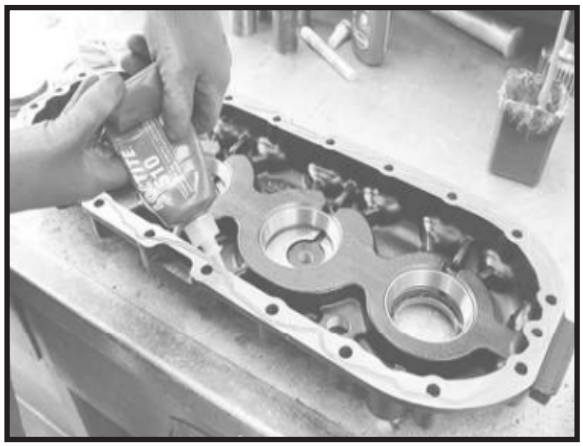

FIGURE 30: Apply the prescribed sealant on the coupling surface of both halfhousings.

FIGURE 31: Spread the sealant evenly, with a suitable roller, on first half-housing.

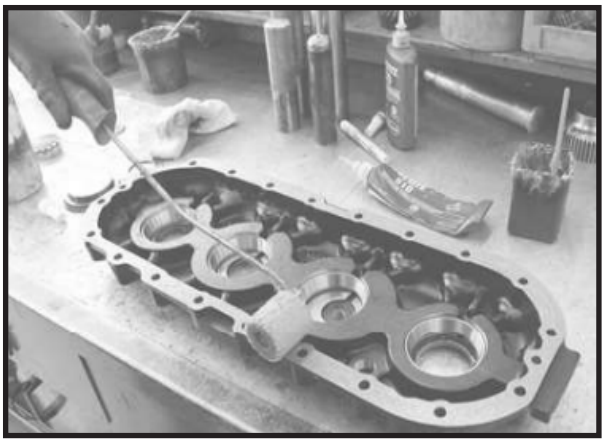

FIGURE 32: Spread the sealant evenly, with a suitable roller, on second halfhousing.

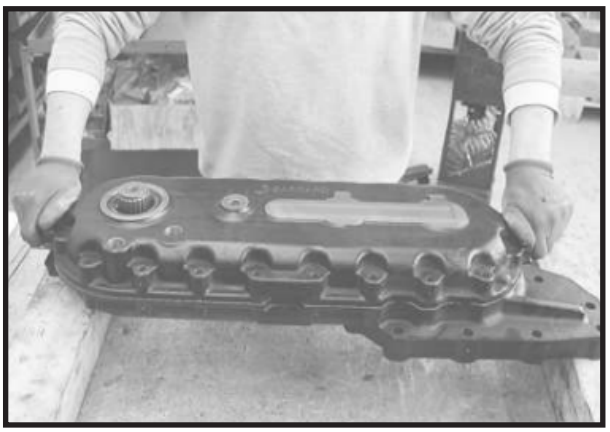

FIGURE 33: Assemble the second half-housing on the first. **Note**: carefully insert the half-housing on the splined end, so as not to damage the seal ring.

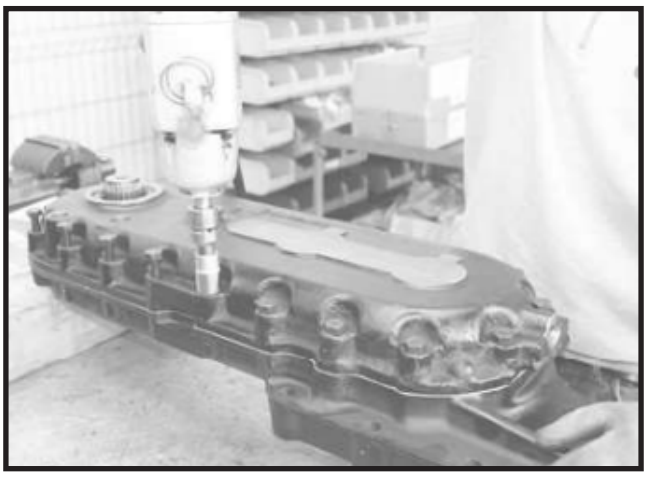

FIGURE 34: Assemble the fastening bolts.

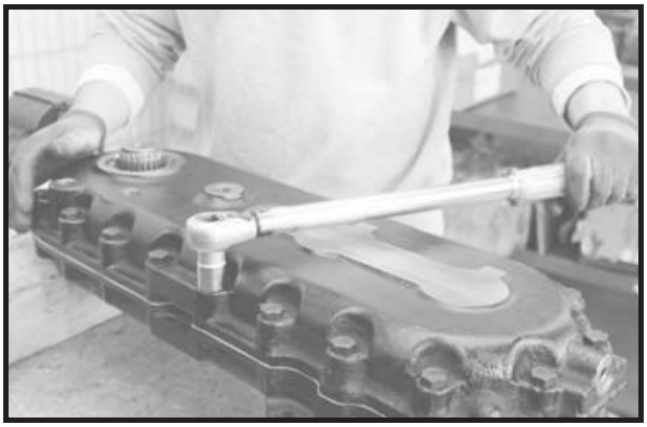

FIGURE 35: Tighten the bolts to prescribed torque with dynamometric wrench.

Remove excess of sealant in the bonding area of the half-housings.

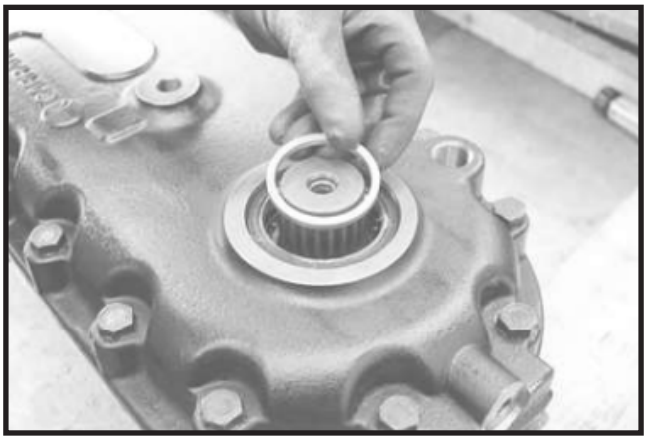

FIGURE 36: Assemble the spacer on the splined end, as shown.

FIGURE 37: Assemble the flange.

FIGURE 38: Assemble a new O-Ring in shown position.

FIGURE 39: Assemble the flange fastening bolt with relative washer.

FIGURE 40: Screw-in the flange fastening bolt.

FIGURE 41: Tighten the bolt to prescribed torque with dynamometric wrench.

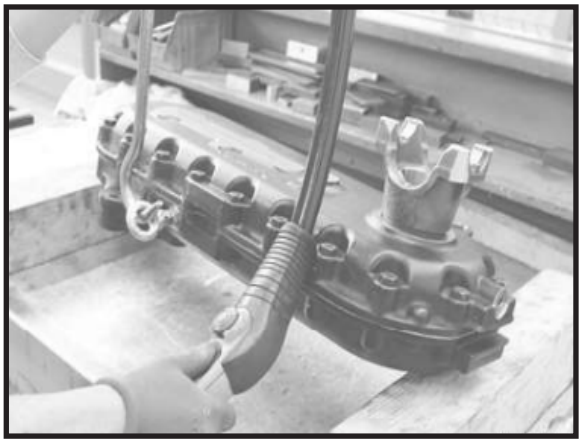

FIGURE 42: Hook the TB (**3**) to a system which allows easy handling.

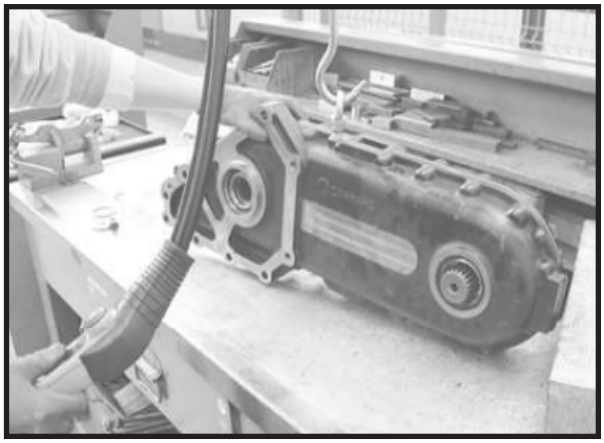

FIGURE 43: Position the TB on work bench as shown.

FIGURE 44: Assemble the spacer on the splined end.

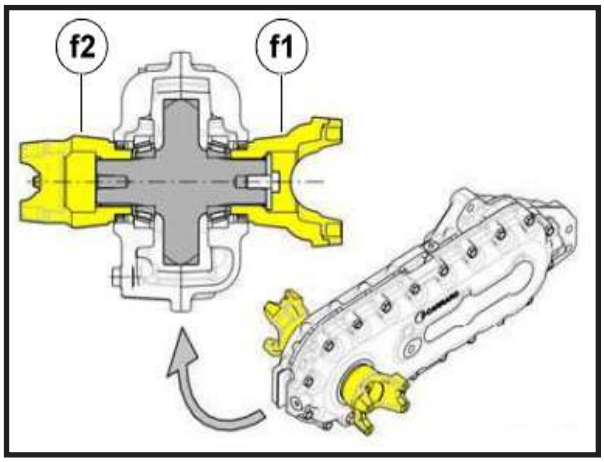

FIGURE 45: Assemble the second flange (f2) rotated about 90° with respect to the position of the flange (f1) already installed (as shown in figure).

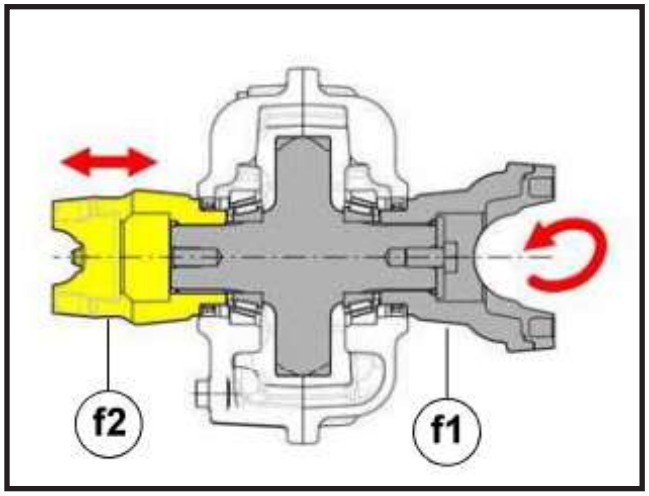

FIGURE 46: To install the flange in the correct position proceed by trial and error, as follows:

- rotate the flange (f1) and shaft (D) group;
- insert the flange (f2) on the splined shaft;
- check the relative position of the flanges;
- if the position is not correct, remove the flange (f2) and repeat the operations described.

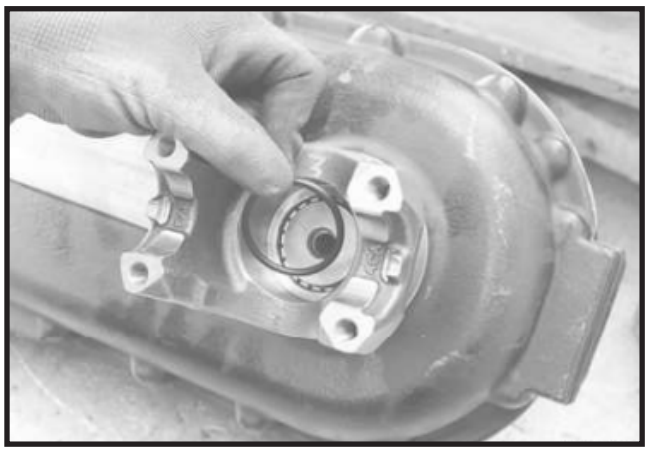

FIGURE 47: Assemble a new O-Ring in shown position.

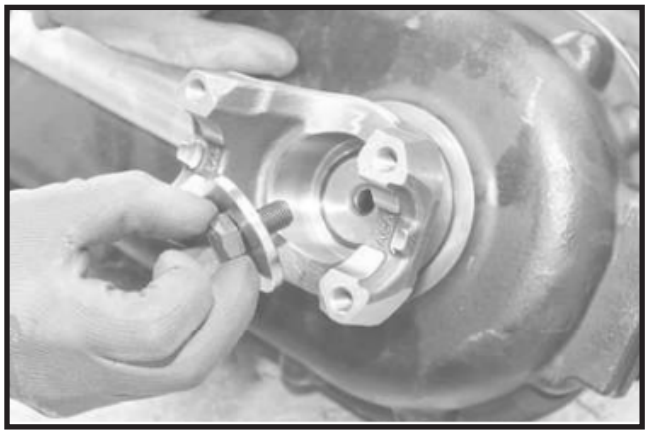

FIGURE 48: Assemble the flange fastening bolt with relative washer.

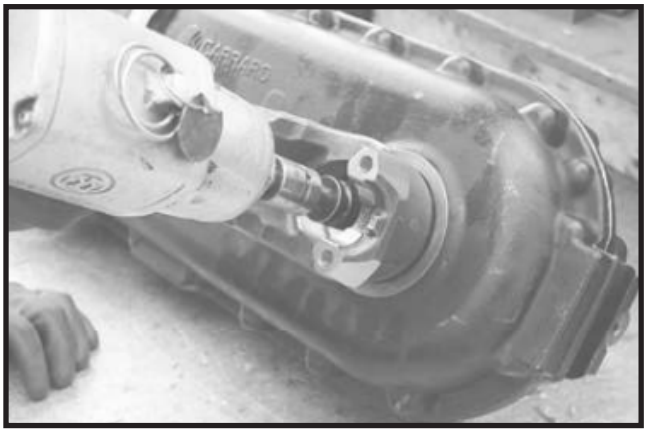

FIGURE 49: Screw-in the flange fastening bolt.

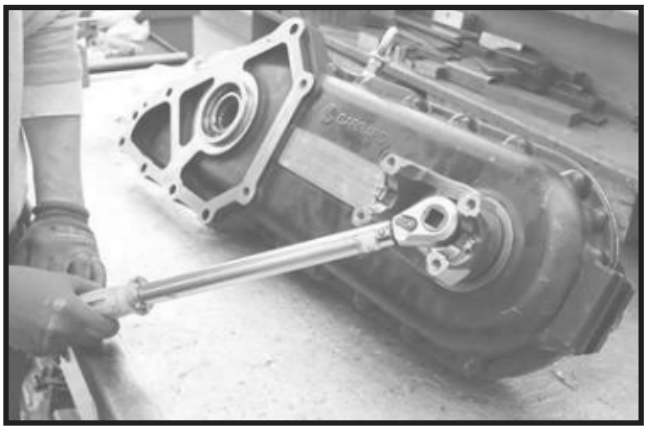

FIGURE 50: Tighten the bolt to prescribed torque with dynamometric wrench.

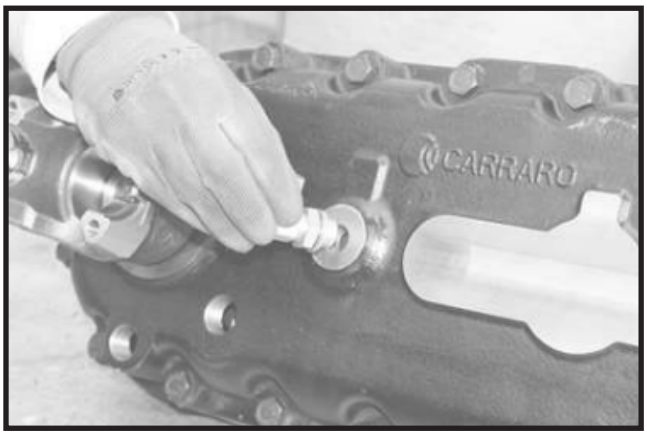

FIGURE 51: Assemble the hydraulic elbow adapter as shown.

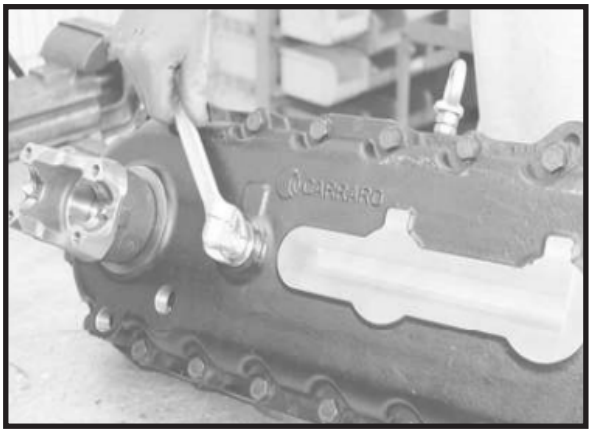

FIGURE 52: Tighten the adapter base to prescribed torque.

FIGURE 53: Tighten the adapter to prescribed torque.

See: direct the adapter as shown in next figure.

FIGURE 54: **Note**: direct the adapter as shown in figure.

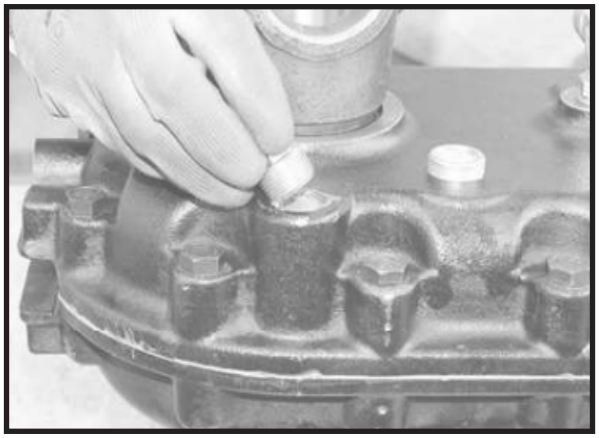

FIGURE 56: Assemble the oil outlet plug

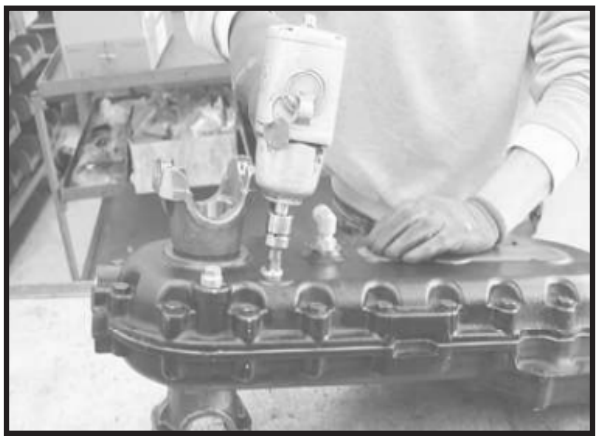

FIGURE 57: Tighten the plugs to prescribed torque.

FIGURE 58: It's recommended to check correct sealing of the TB427. Assemble the sealing air test device to hydraulic elbow adapter.

Important: pressure max 4.3 psi (0.300 bar) for 2 min. If there is a leak, remove the flanges and check correct assembly of seal rings.

FIGURE 59: Remove the sealing test device.

Assemble the breather.

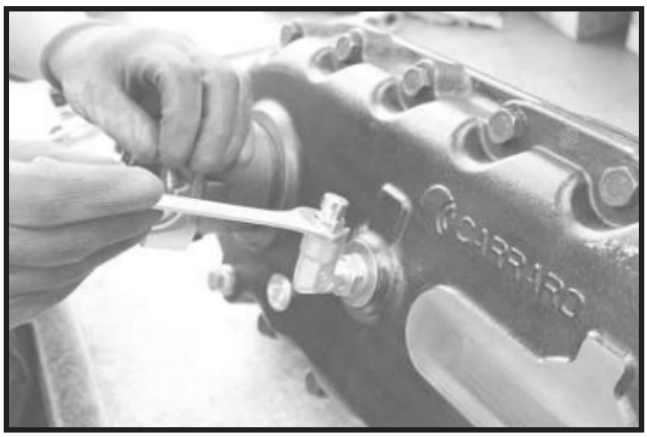

FIGURE 60: Tighten the breather to prescribed torque.

TB427 Disassembly

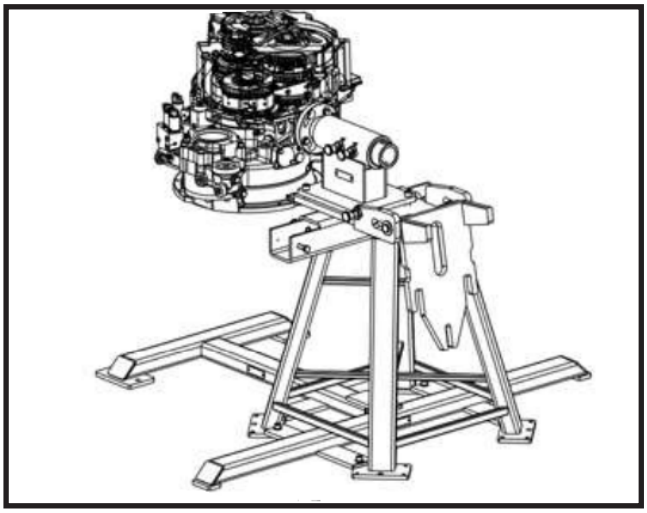

FIGURE 1: Drain oil from transmission and TB427.

Install the transmission on the appropriate special stand.

See: Special Tools in Product Data.

WARNING

An eventual transmission fall could seriously damage the operator; Verify that the support is stable and correctly anchored, check that the whole transmission group is securely fastened to the support.

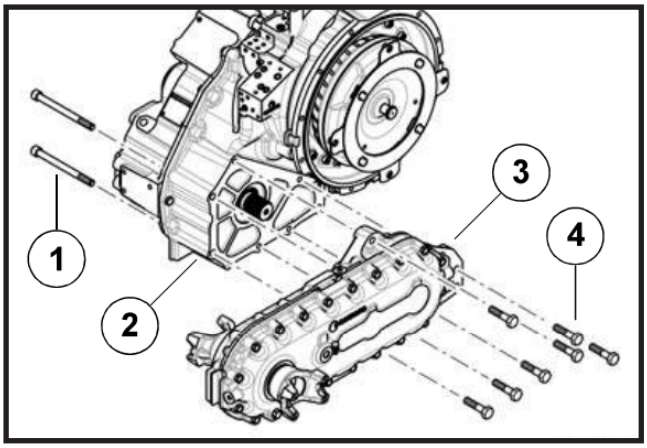

FIGURE 2: Hook the TB (**3**) to a lifting system which allows easy handling.

Remove the 7 short bolts (**3**) on front side. Remove the 2 long bolts (**1**) on rear side.

Remove the TB (**3**) from transmission housing (**2**). **Note**: the TB is strongly bonded to the transmission with sealant, using levers to facilitate its release.

FIGURE 3: Remove the flanges, if necessary replace the seal rings or disassemble the unit.

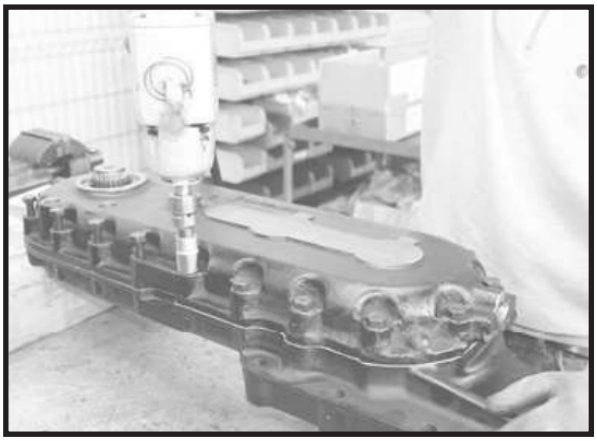

FIGURE 4: Remove the fastening bolts, if necessary disassemble the unit.

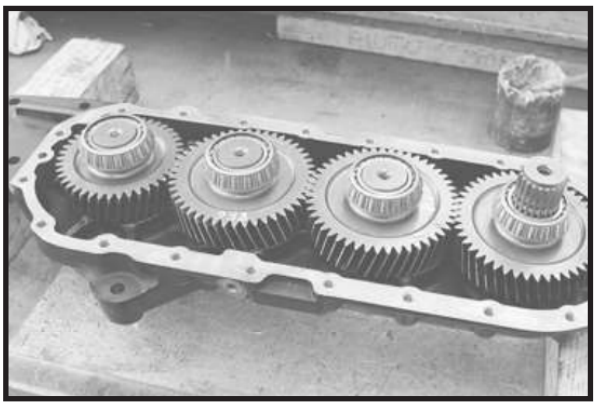

FIGURE 5: Remove the upper half-box and disassemble the parts that need replacement or overhauling.

For correct removal of seals and bearings is recommended to follow the instructions in section Special recommendations.

Filters and Oil Dipstick

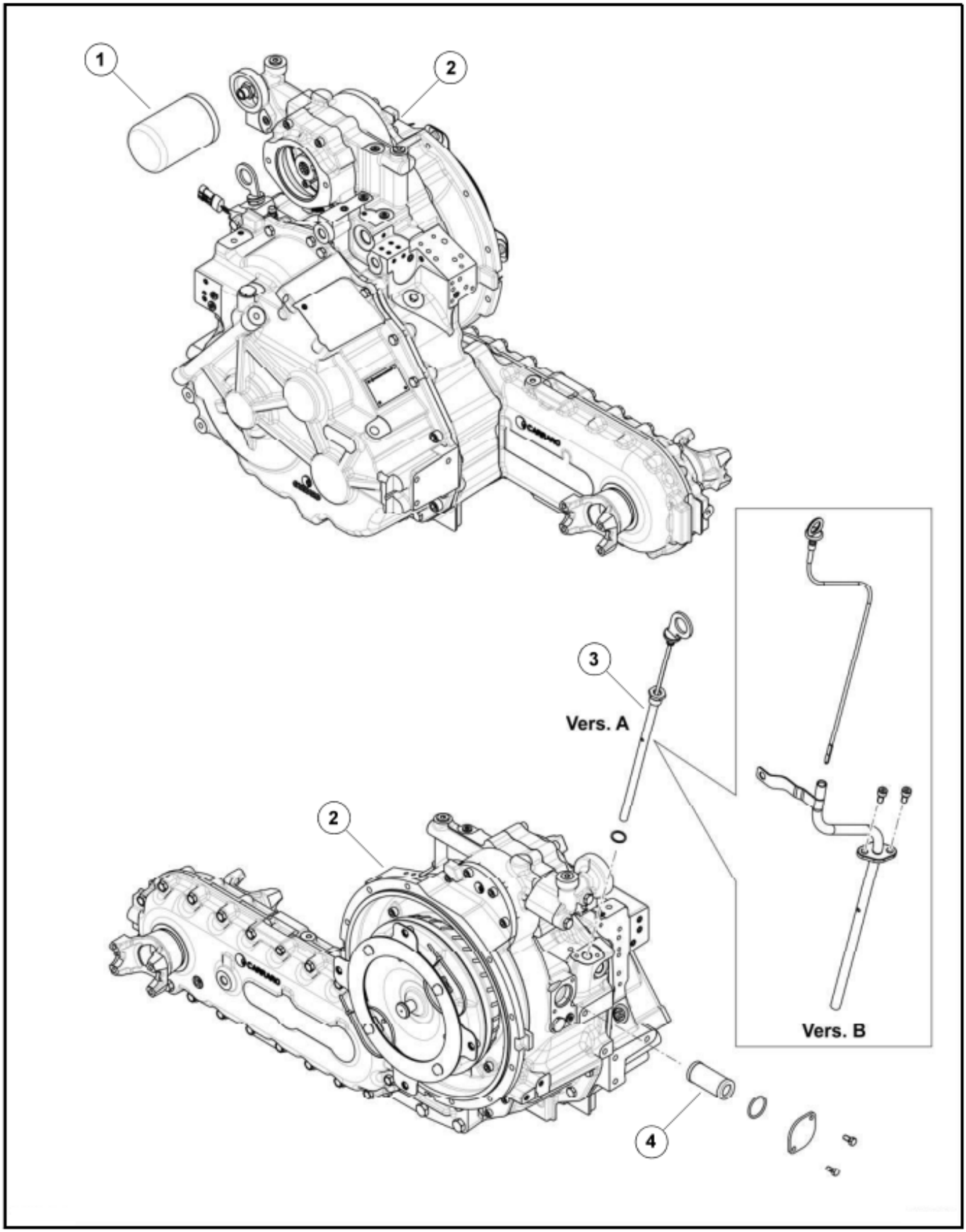

Assembly

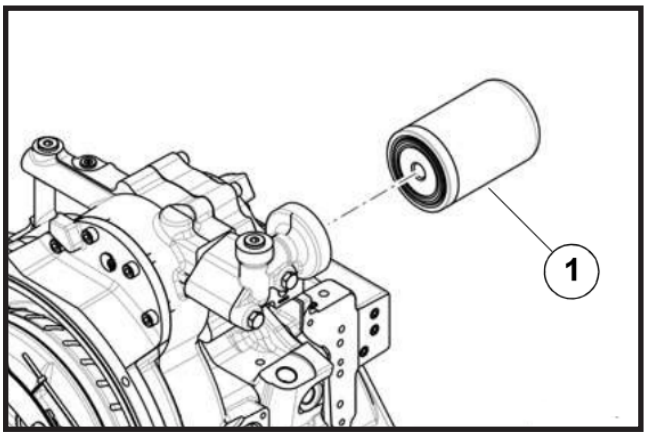

FIGURE 1: Assemble new oil filter (**1**) by hand.

Note: put a thin coat of oil or grease on the filter gasket, turn clockwise until the gasket makes contact with the base, continue to turn the filter 2/3 turn.

FIGURE 2: Lubricate and assemble a new O-Ring to the filter (**4**) as shown.

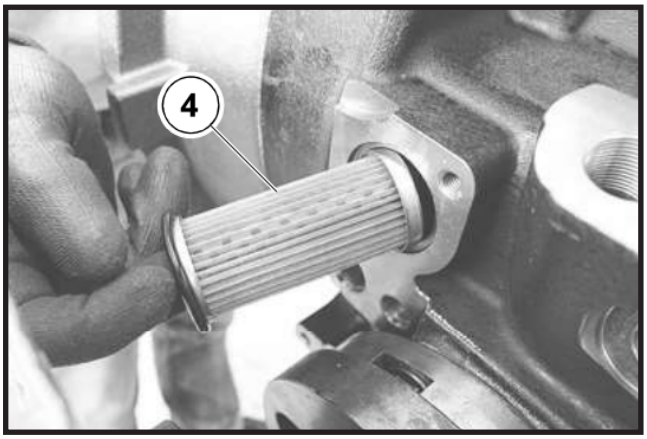

FIGURE 3: Insert the filter complete of O-ring in the transmission, with the O-ring on outer side.

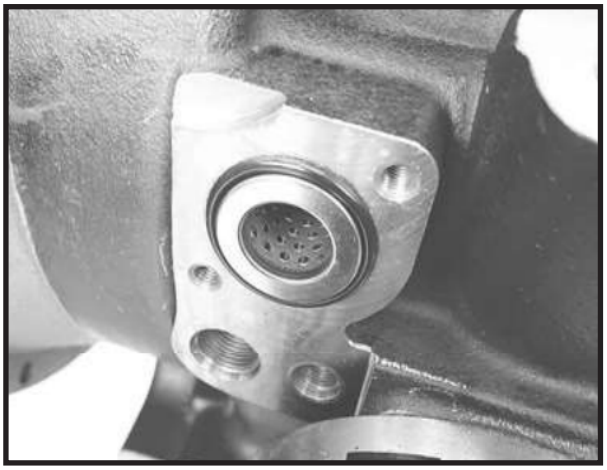

FIGURE 4: **Note**: position of fully assembled filter.

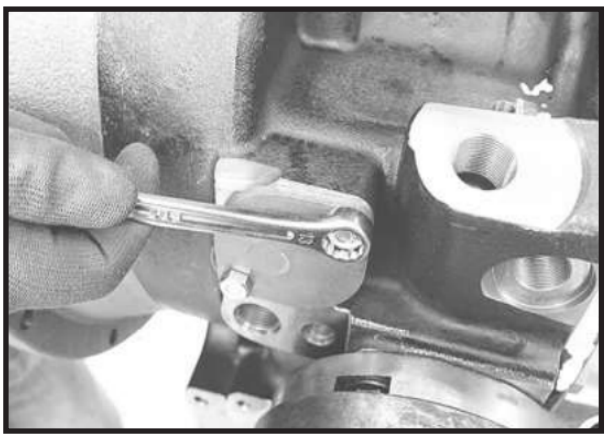

FIGURE 5: Assemble the filter cover with related fastening bolts.

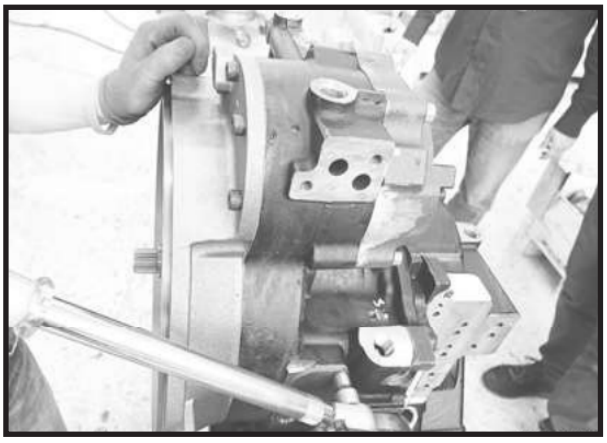

FIGURE 6: Tighten the fixing bolts to prescribed torque.

Oil Level Dipstick vers. A

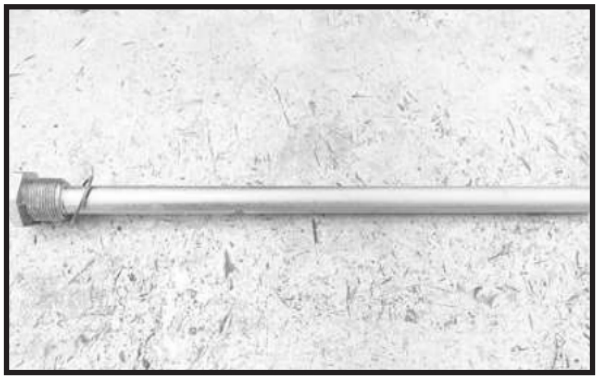

FIGURE 1: Clean with care the pipe (**3**) of oil level dipstick. **Note**: in figure version A dipstick is shown, in version B the dipstick is shaped.

See: next section.

FIGURE 2: Assemble the shown washer.

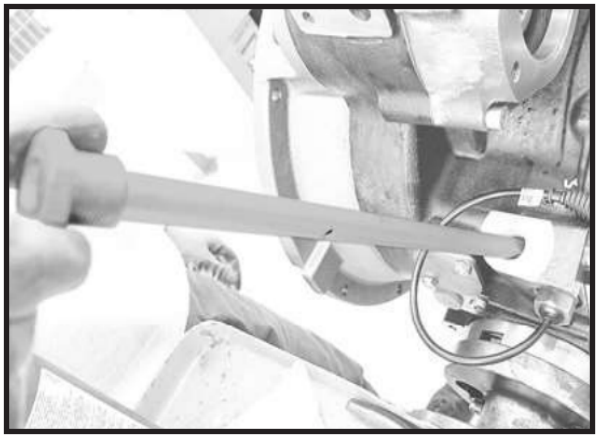

FIGURE 3: Insert the pipe of oil level dipstick in the transmission.

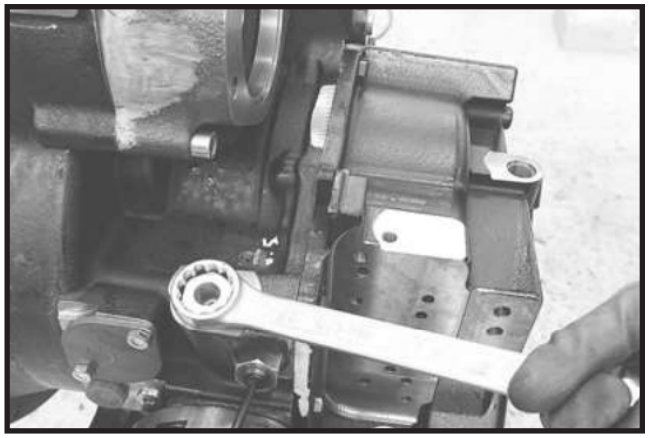

FIGURE 4: Screw in the pipe.

Tighten to prescribed torque.

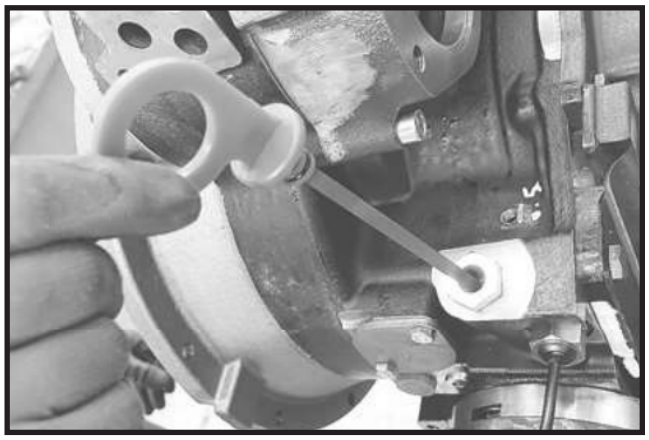

FIGURE 5: Insert the oil level dipstick in the transmission.

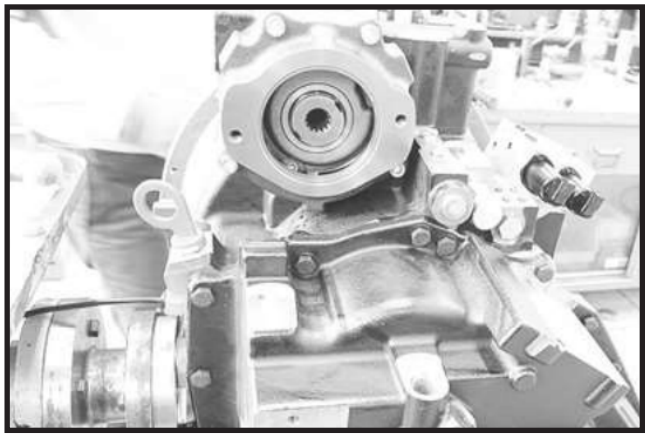

FIGURE 6: Check that oil level dipstick is inserted to the end.

Oil level dipstick vers. B

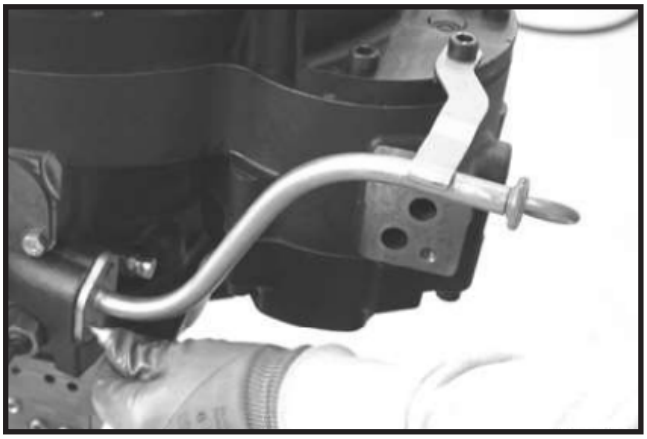

FIGURE 1: Clean with care the pipe (**3**) of oil level dipstick. Assemble the pipe to the transmission with relative fastening bolts.

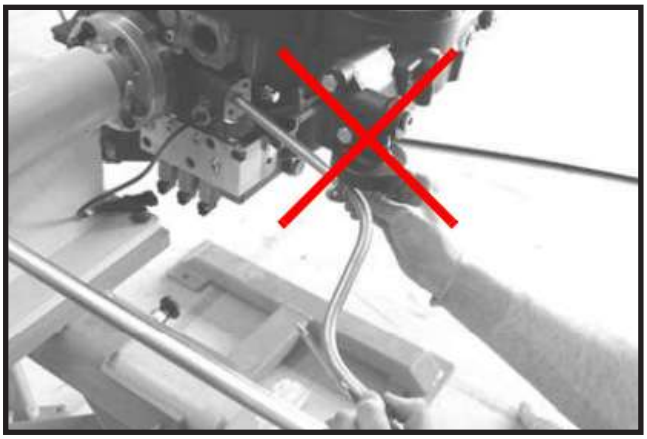

FIGURE 2: **Important**: before assembling the oil level dipstick pipe it is necessary to remove the filter support unit, if present.

FIGURE 3: Tighten the bracket fixing bolt to prescribed torque.

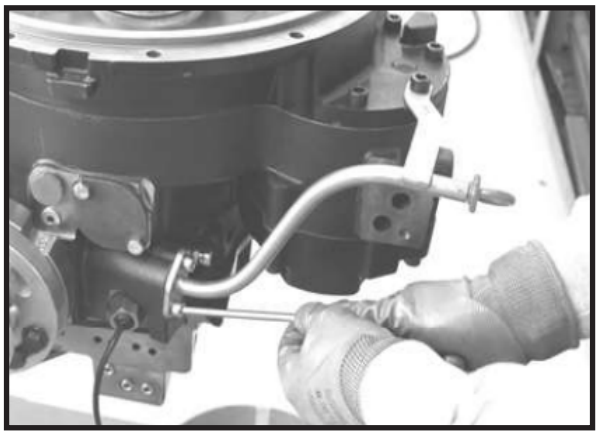

FIGURE 4: Tighten the base fixing bolts to the required torque.

Disassembly

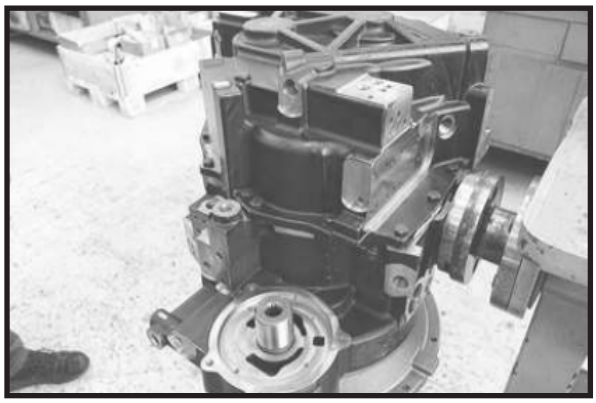

FIGURE 1: Drain oil from transmission.

Install the transmission on the appropriate special stand.

See: Special Tools in Product Data.

DANGER Accidental fall of transmission heavy parts can result in serious injury to the operator; verify that the support is stable and correctly anchored, check that the whole transmission group is securely fastened to the support.

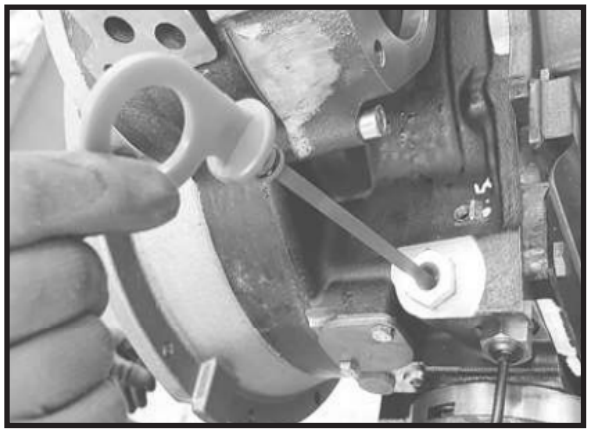

FIGURE 2: Remove the oil level dipstick in the transmission.

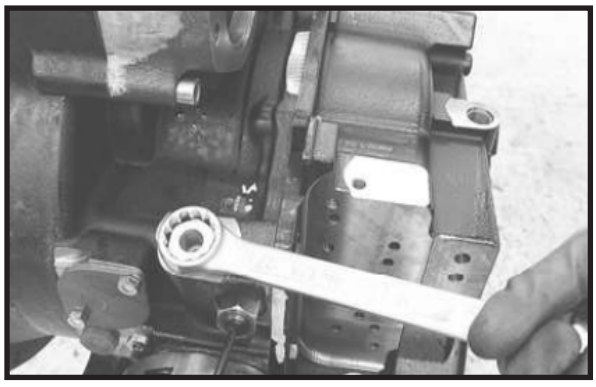

FIGURE 3: If necessary, unscrew the pipe to remove it. Note: for version B dipstick, remove relative fastening screws. See: next step.

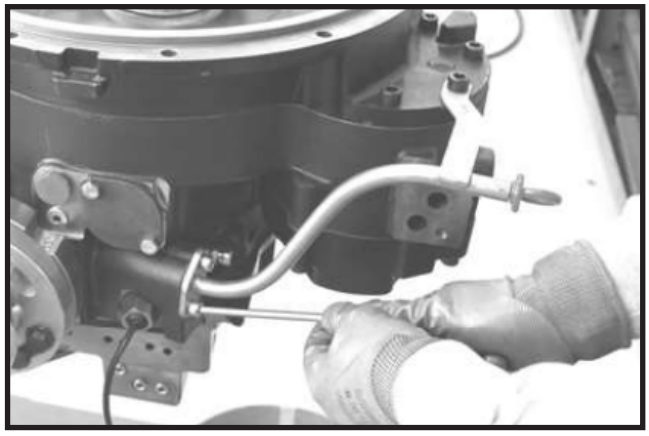

FIGURE 4: **Note**: for version B dipstick, remove relative fastening screws.

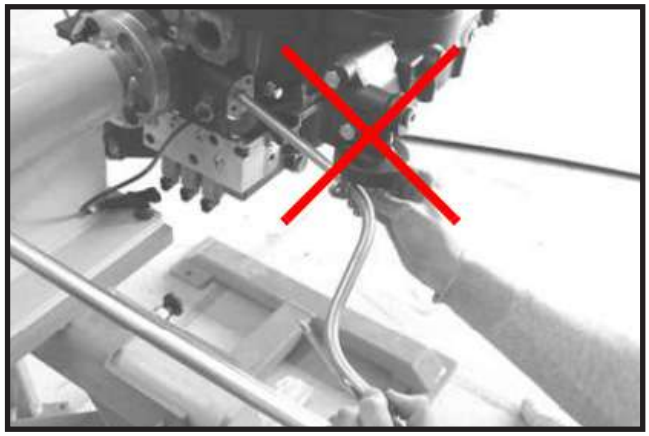

FIGURE 5: **Important**: before disassembling the oil level dipstick pipe it is necessary to remove the filter support unit, if present.

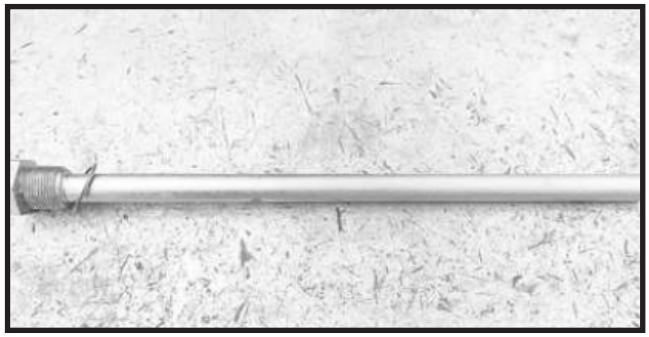

FIGURE 6: Clean with care the pipe (**3**) of oil level dipstick; replace the pipe if has been damaged.

Note: in version B the dipstick is shaped.

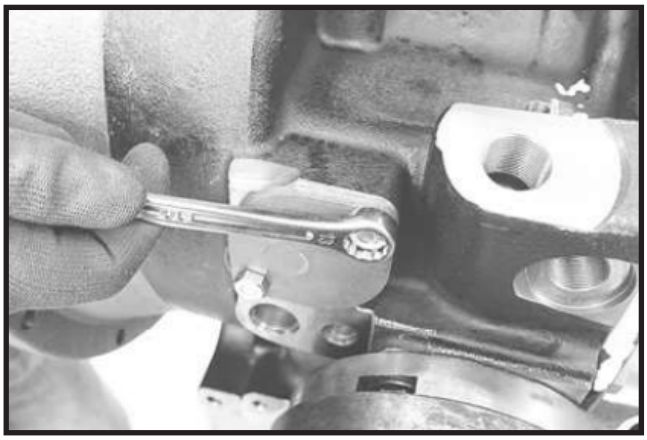

FIGURE 7: To remove the filter (**4**) unscrew the cover fastening bolts.

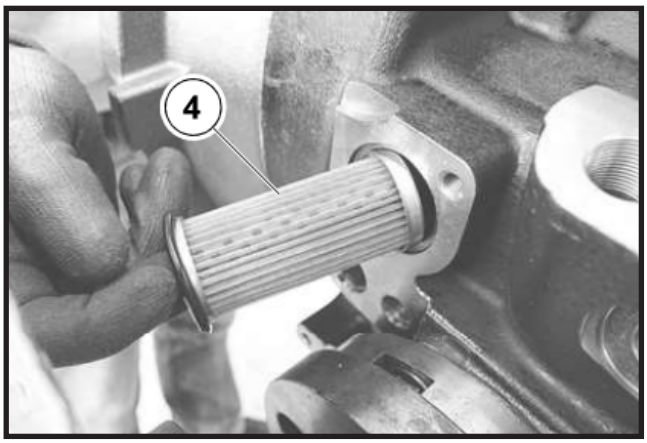

FIGURE 8: Filter handling and wash according to the rules in force. In case of replacement, use only authorized disposal procedures.

Remove the oil filter (**4**) and related O-ring.

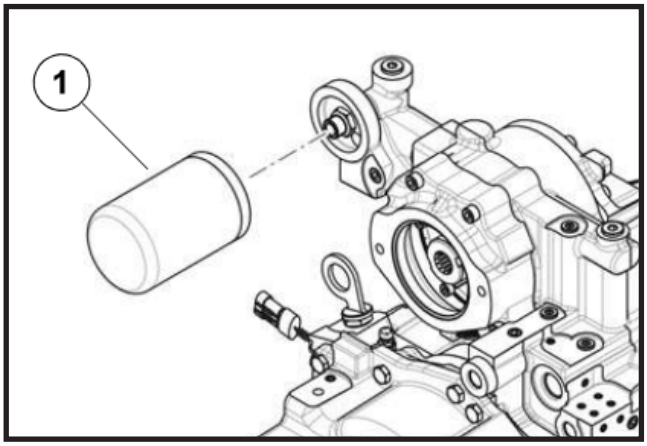

FIGURE 9: Unscrew the oil filter (**1**).

Note: filter handling and disposal according to the rules in force. Use only authorized disposal procedures and, in case of doubt, refer to the authorized bodies.

Sensors and Valves

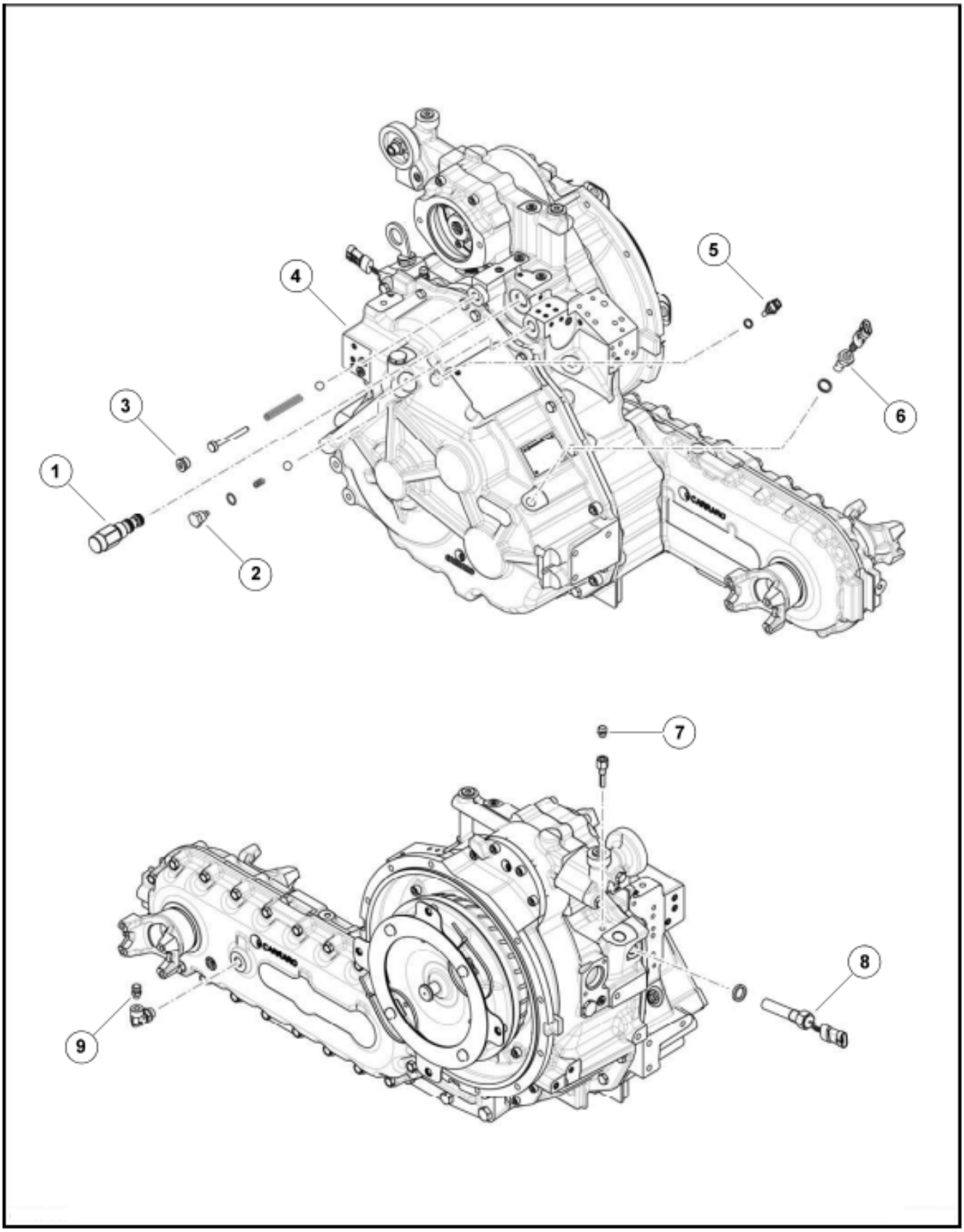

Assembly

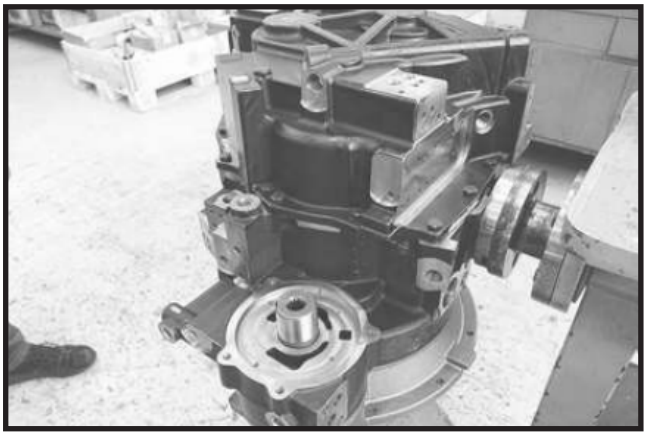

FIGURE 1: **DANGER** Accidental fall of transmission heavy parts can result in serious injury to the operator; verify that the support is stable and correctly anchored, check that the whole transmission group is securely fastened to the support.

FIGURE 2: Insert the ball relative to special plug (**3**) in shown seat.

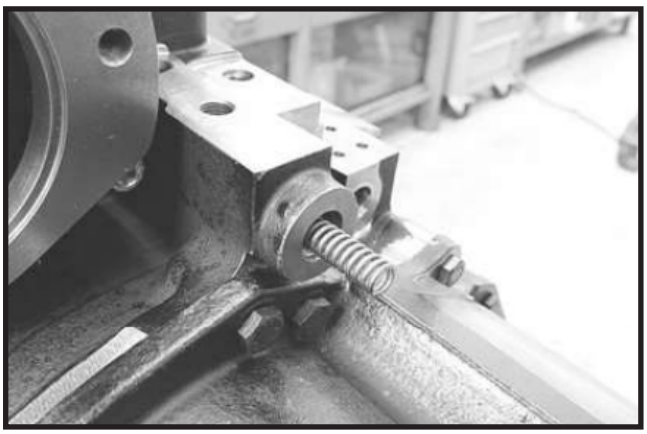

FIGURE 3: Insert the long spring in shown seat.

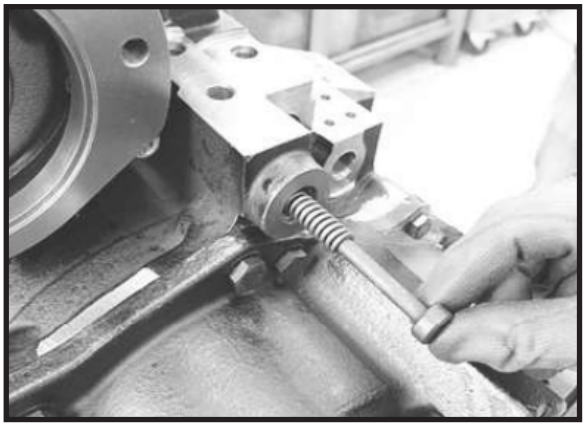

FIGURE 4: Insert the spring guide bolt.

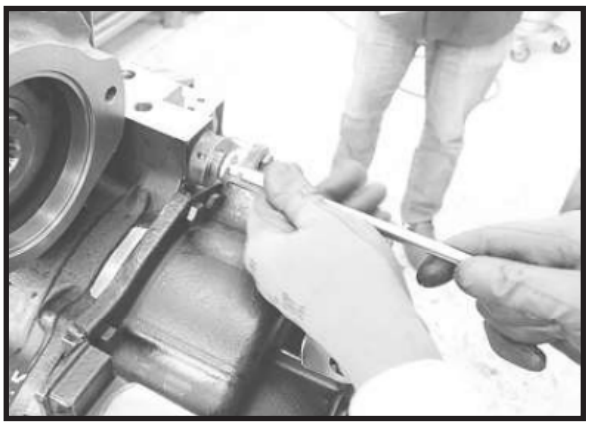

FIGURE 5: Assemble and tighten the plug (**3**) to prescribed torque.

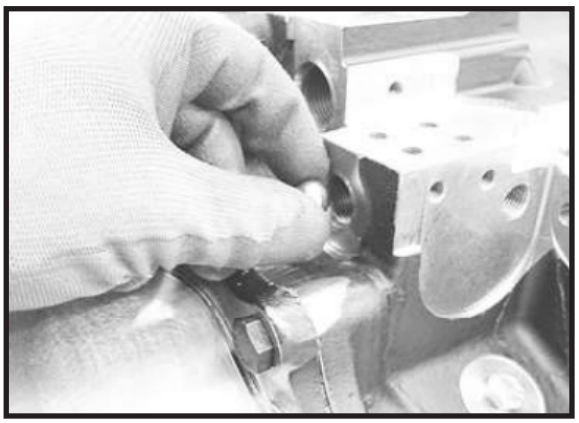

FIGURE 6: Insert the ball relative to special plug (**2**) in shown seat.

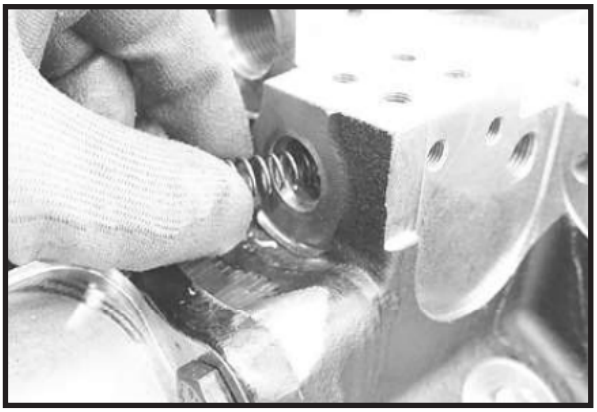

FIGURE 7: Insert the short spring in shown seat.

FIGURE 8: Lubricate and assemble new O-Ring to the special plug (**2**). **Note**: the plug has a guide pin for the short spring.

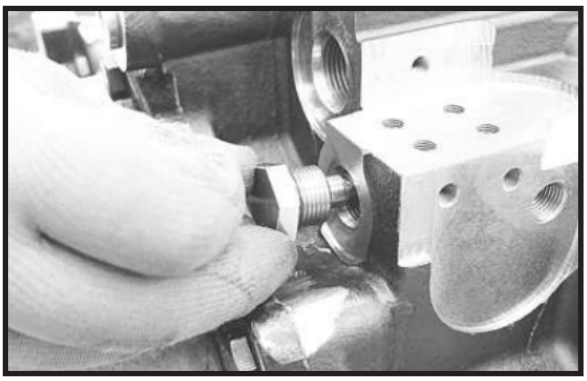

FIGURE 9: Assemble the special plug (**2**).

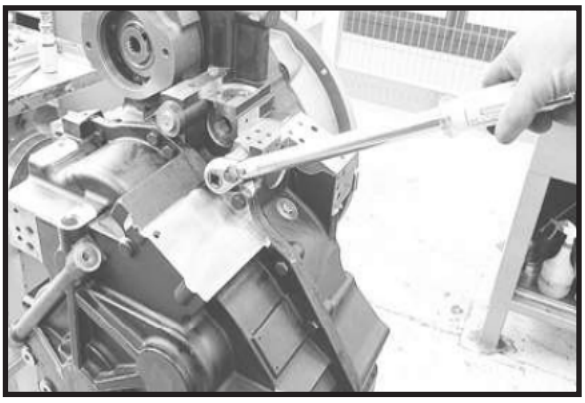

FIGURE 10: Tighten the plug to prescribed torque.

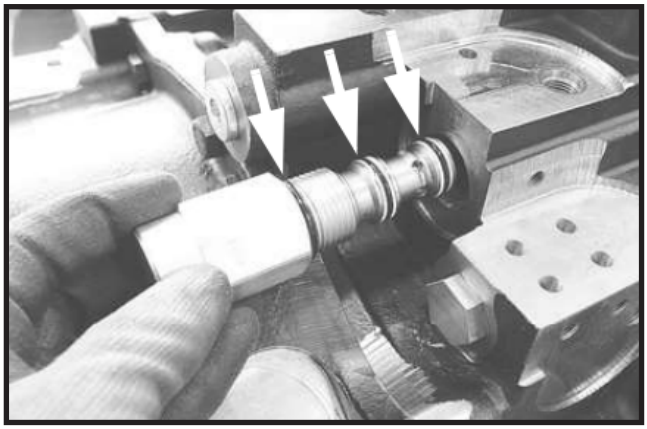

FIGURE 11: Lubricate and assemble new O-Ring as shown. Assemble the pressure control valve (**1**).

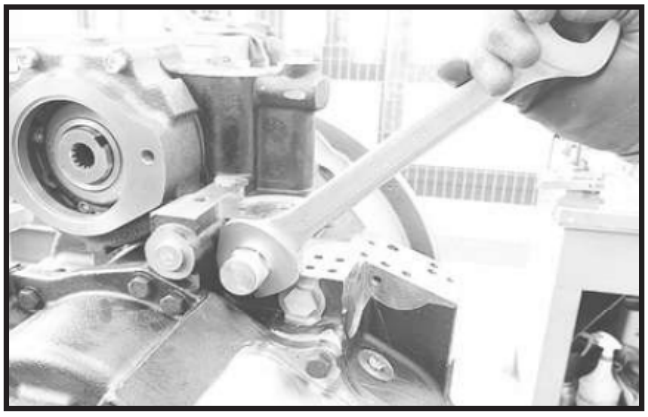

FIGURE 12: Tighten the valve to prescribed torque.

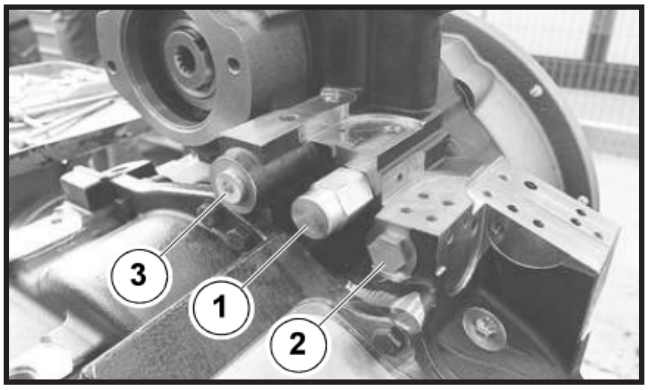

FIGURE 13: Position of assembled parts.

FIGURE 14: Assemble the washer to speed sensor (**8**).

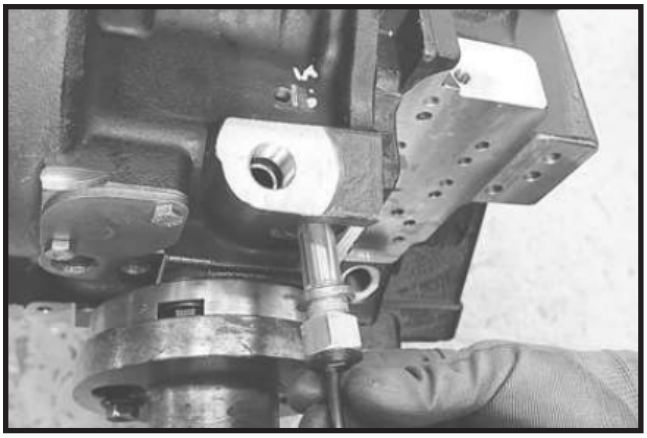

FIGURE 15: Assemble the speed sensor (**8**) to the transmission.

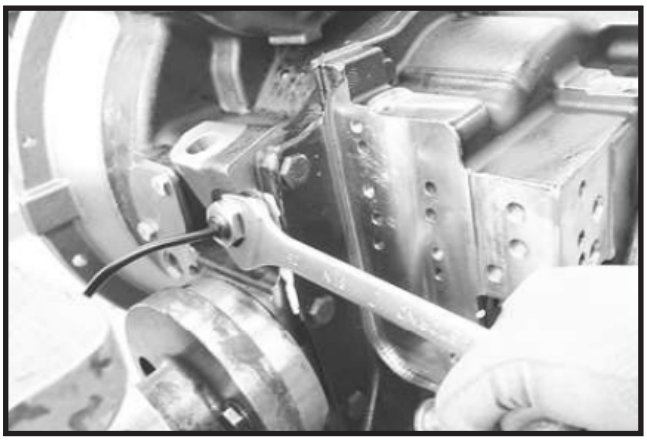

FIGURE 16: Tighten the sensor to prescribed torque.

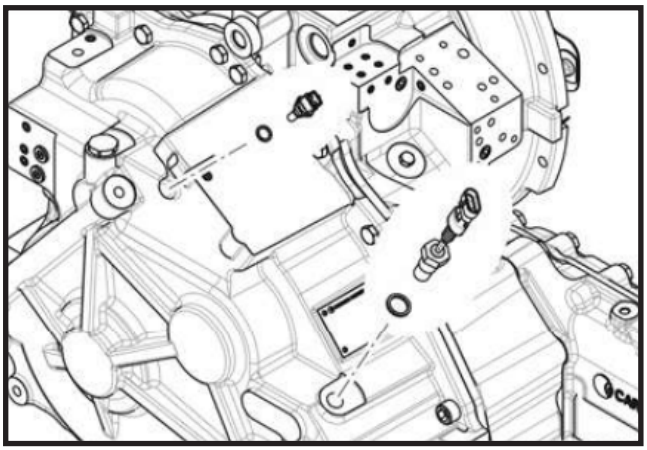

FIGURE 17: Assemble the speed sensor (**6**) and the temperature sensor (**5**) to the transmission, repeating the operations already described. Tighten the sensors to prescribed torque.

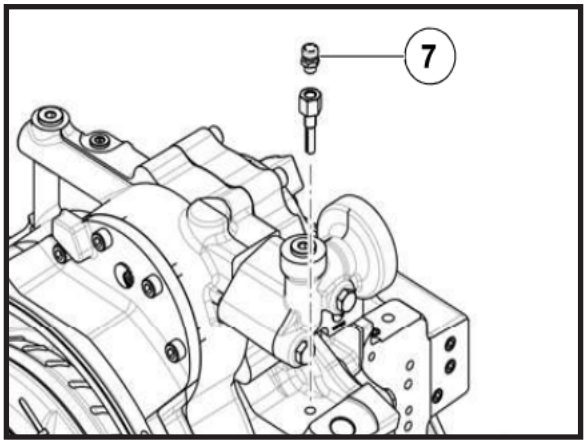

FIGURE 18: Assemble the breathers (**7**) with relative fitting. Tighten the parts to prescribed torque.

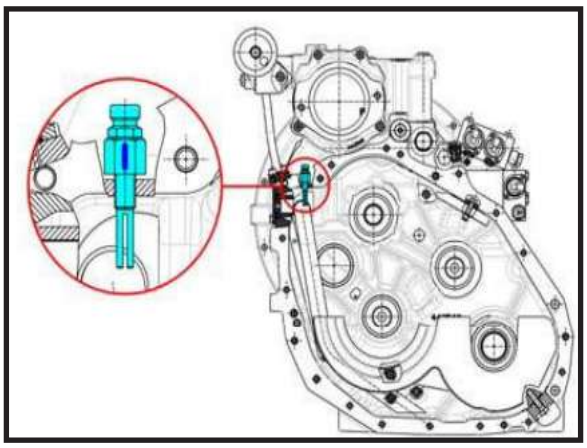

FIGURE 19: **Important**: orient the extension as indicated; make a reference mark on the hexagon of the extension at groove, before assembling.

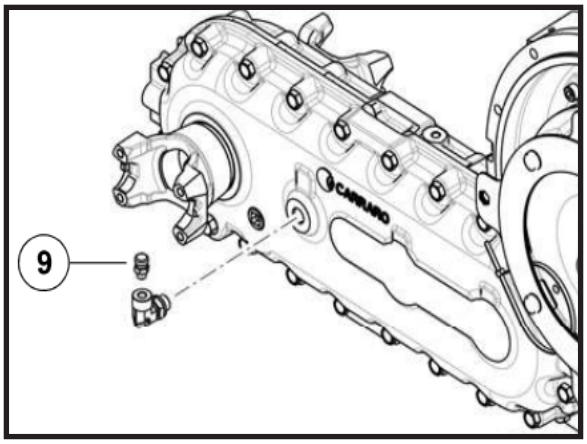

FIGURE 20: Assemble the breathers (**9**) and related fitting, if necessary.

See: TRANSFER BOX TB427 in this Chap. Tighten the parts to prescribed torque.

Disassembly

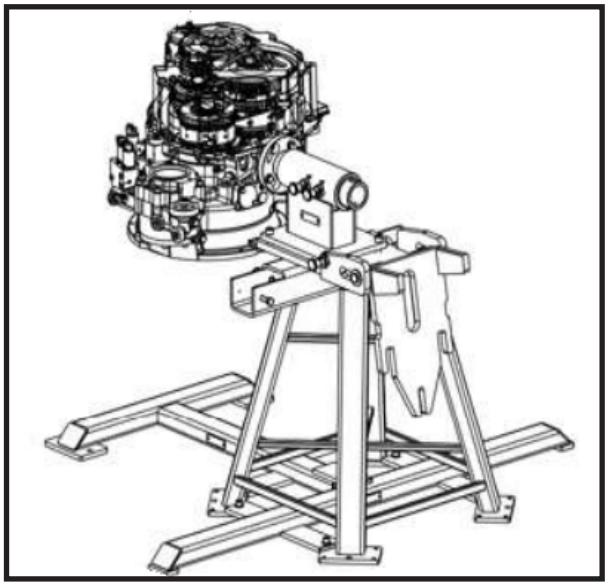

FIGURE 1: Drain oil from transmission.

Install the transmission on the appropriate special stand.

See: Special Tools in Product Data.

WARNING

Accidental fall of transmission heavy parts can result in serious injury to the operator; verify that the support is stable and correctly anchored, check that the whole transmission group is securely fastened to the support.

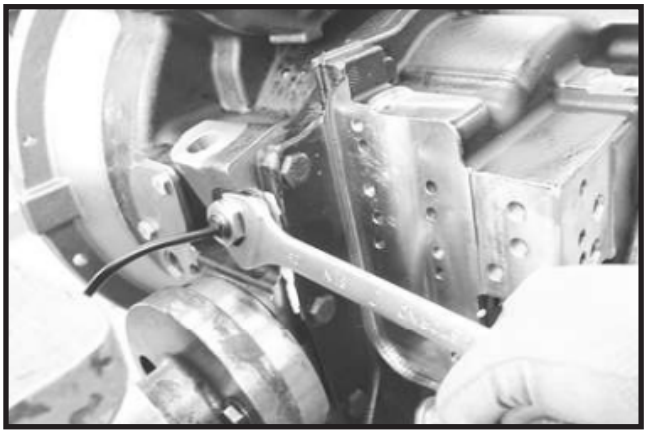

FIGURE 2: If replacement is required, remove the sensors.

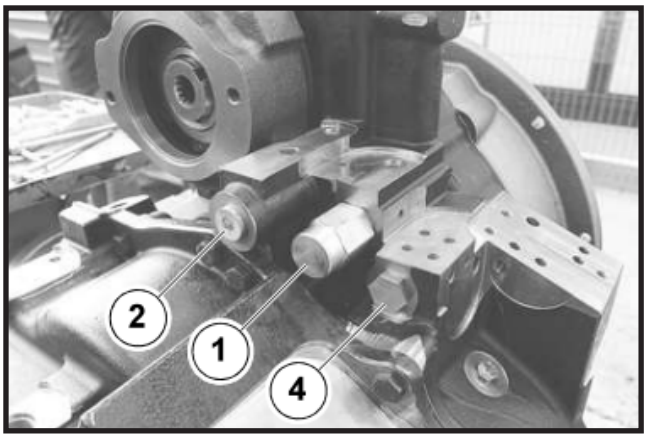

FIGURE 3: Remove only the elements that need to be replaced or overhauled

Note: damaged or worn O-Ring must be replaced.

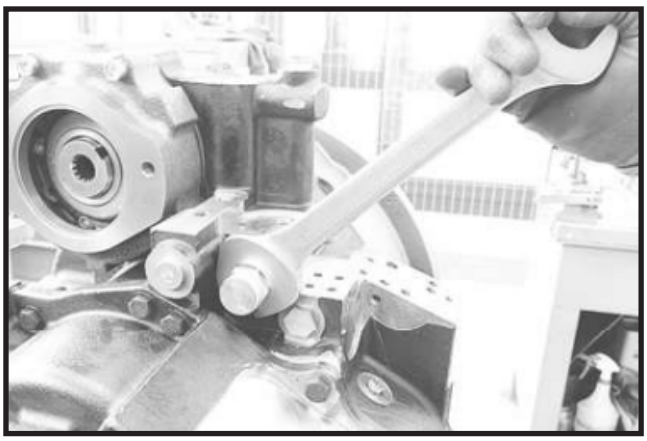

FIGURE 4: Unscrew the pressure control valve (**1**).

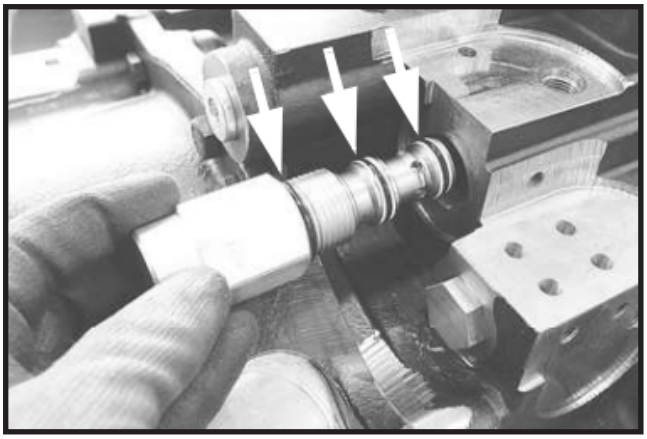

FIGURE 5: Check the valve (**1**) condition.

Clean with care the valve and replace the O-rings if necessary.

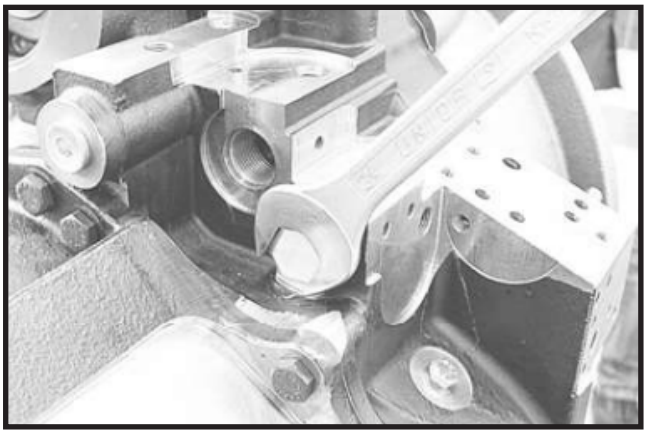

FIGURE 6: Unscrew the special plug (**2**) and collect relative parts.

See: main scheme.

Important: damaged or worn parts must be replaced.

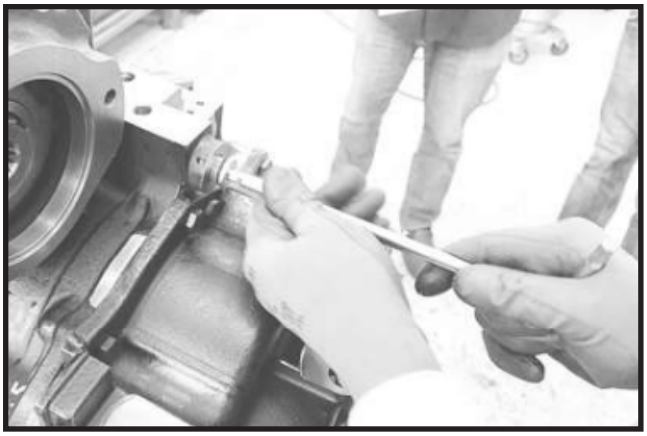

FIGURE 7: Unscrew the plug (**3**) and collect relative parts. **See**: main scheme.

Hydraulic Control Valve Blocks

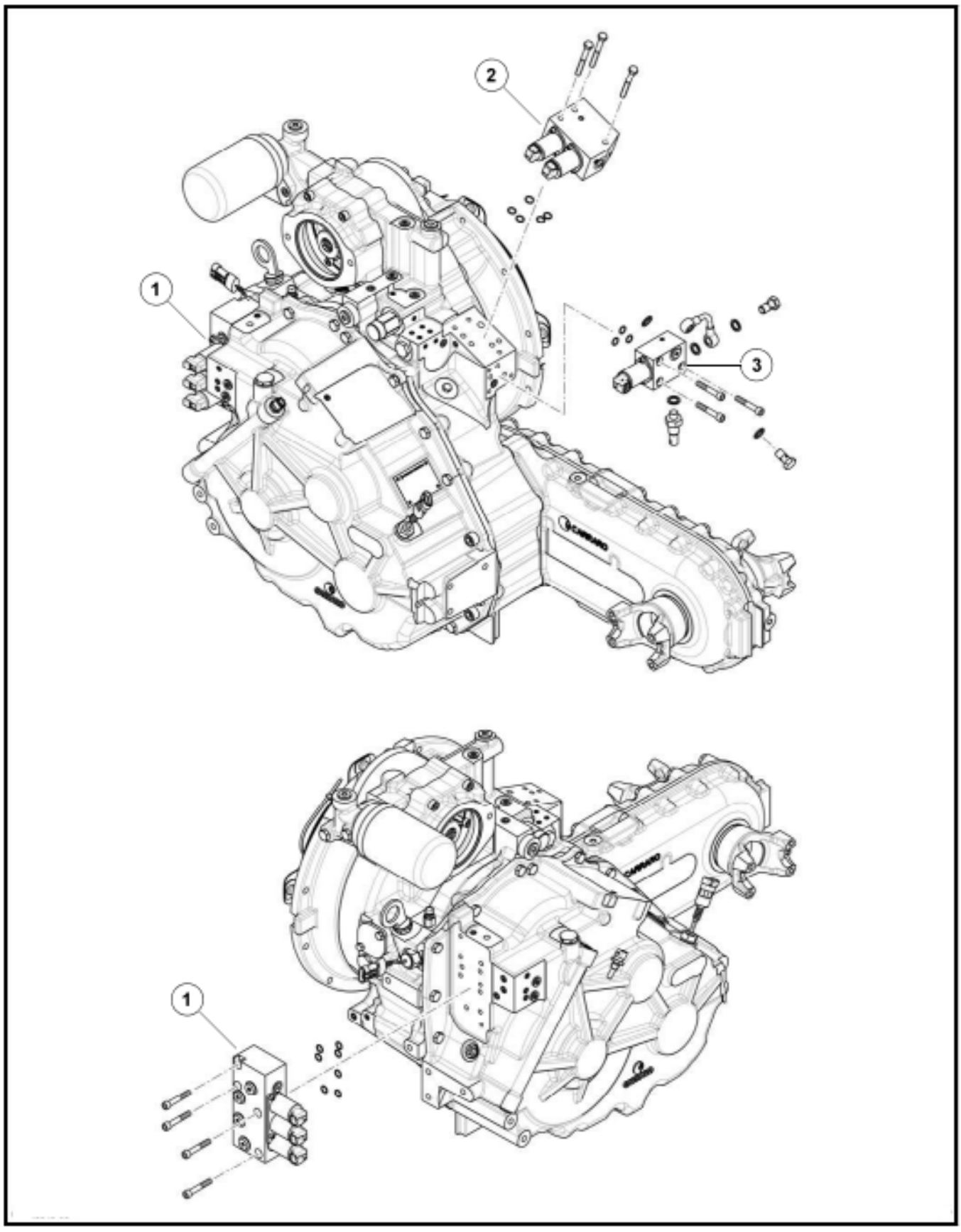

Assembly

FIGURE 1: **DANGER** Accidental fall of transmission heavy parts can result in serious injury to the operator; verify that the support is stable and correctly anchored, check that the whole transmission group is securely fastened to the support.

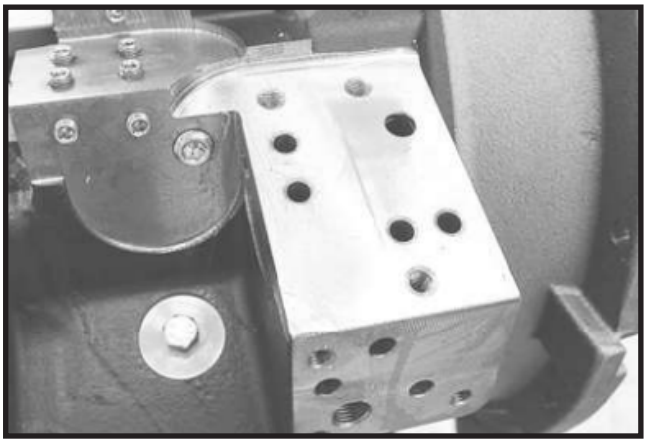

FIGURE 2: Clean with care the seat of control valves unit (**2**).

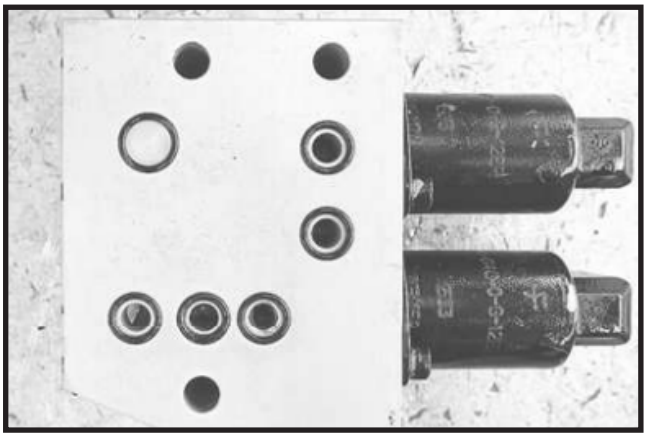

FIGURE 3: Lubricate and assemble new O-Ring as shown.

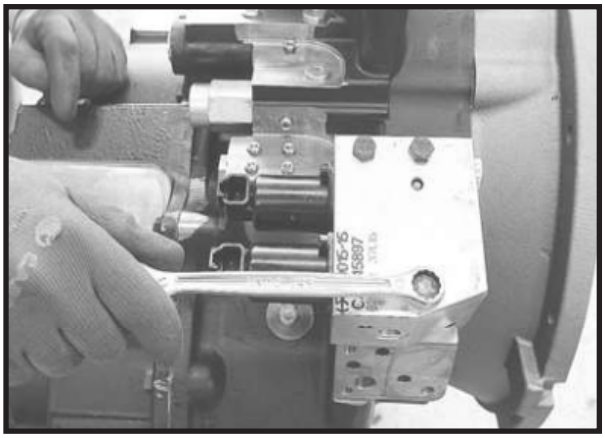

FIGURE 4: Assemble the control valve unit (**2**) to the transmission.

Assemble the fixing bolts.

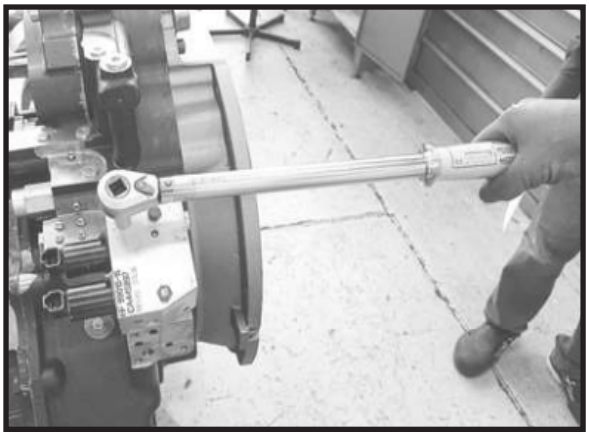

FIGURE 5: Tighten the fixing bolts to prescribed torque.

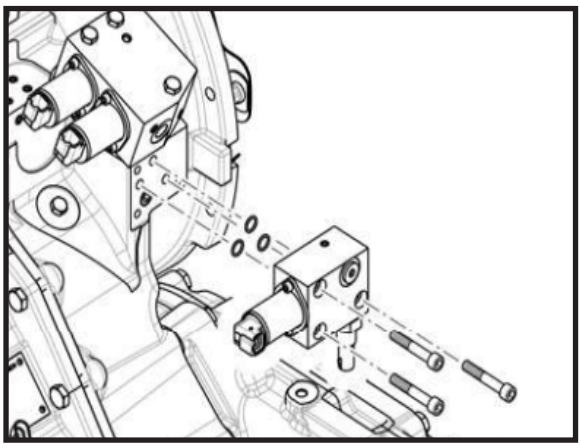

FIGURE 6: Lubricate and assemble new O-Ring to control valve block (**3**).

Assemble the control valve block (**3**) to transmission.

Assemble the fixing bolts.

Tighten the fixing bolts to prescribed torque.

FIGURE 7: Assemble the pressure sensor and relative washer to straight connector.

FIGURE 8: Important: the straight connector must always be present for correct installation of the pressure switch.

Tighten to prescribed torque.

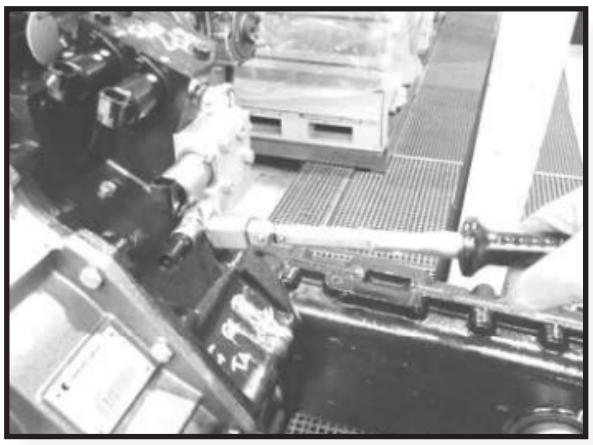

FIGURE 9: Assemble the pressure sensor and relative washer to control valve block (**3**).

Tighten to prescribed torque.

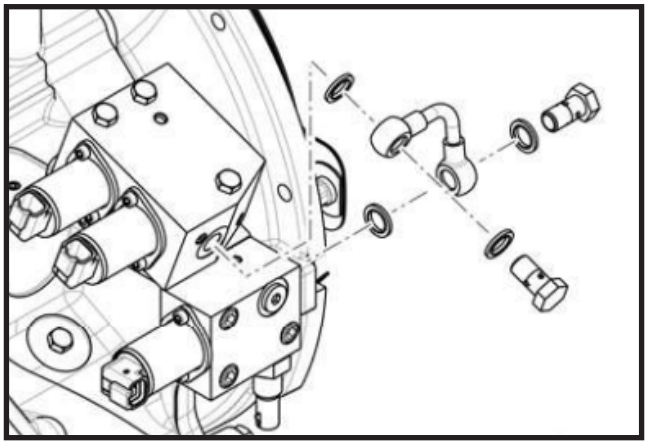

FIGURE 10: Assemble the link pipe to control valve blocks (**2**) and (**3**) with shown parts.

Tighten the fixing bolts to prescribed torque.

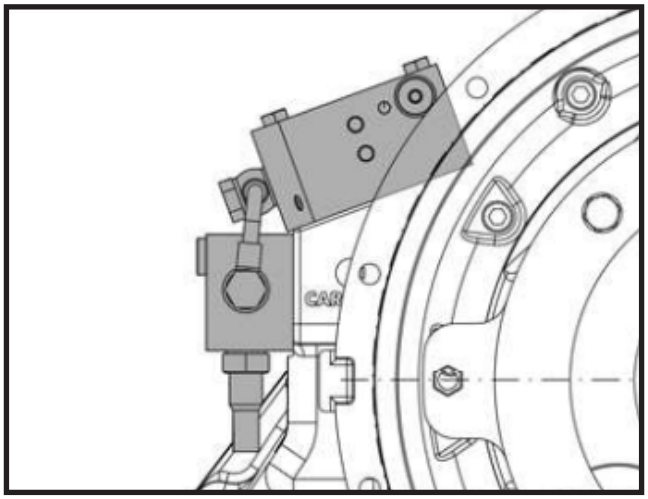

FIGURE 11: Position of assembled parts.

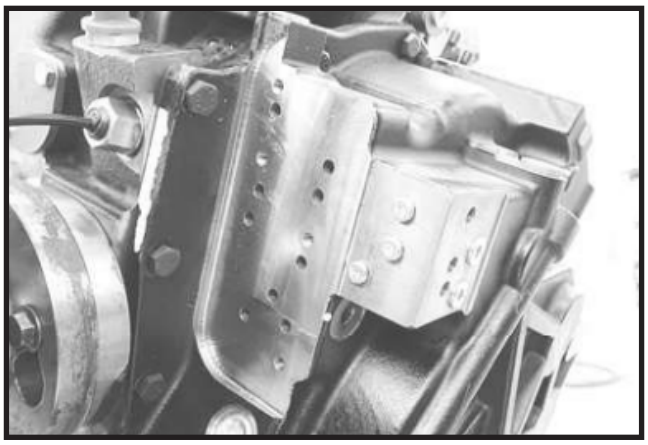

FIGURE 12: Clean with care the seat of control valves unit (**1**).

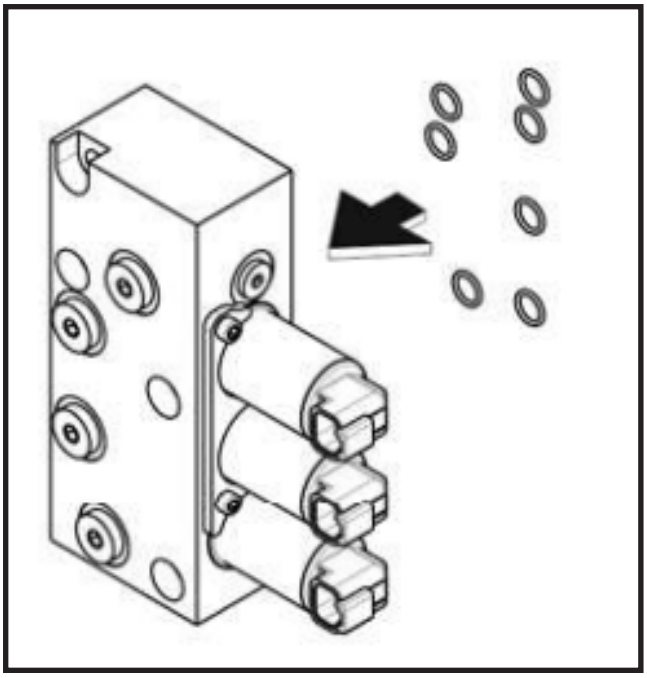

FIGURE 13: Lubricate and assemble new O-Ring as shown.

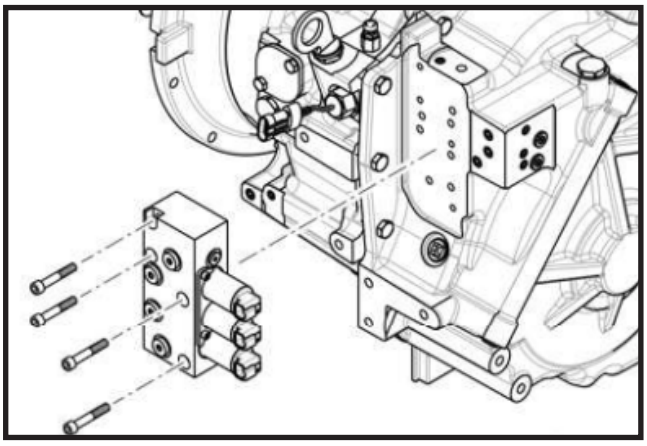

FIGURE 14: Assemble the control valve unit (**1**) to the transmission.

Assemble the fixing bolts.

Tighten the fixing bolts to prescribed torque.

Disassembly

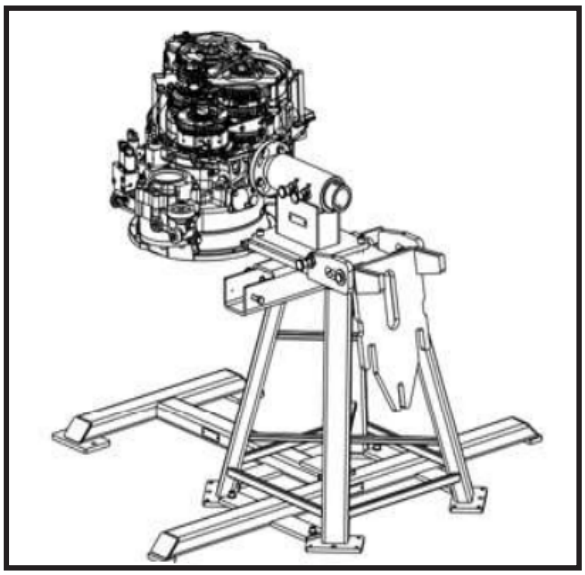

FIGURE 1: Drain oil from transmission.

Install the transmission on the appropriate special stand.

See: Special Tools in Product Data.

WARNING

Accidental fall of transmission heavy parts can result in serious injury to the operator; verify that the support is stable and correctly anchored, check that the whole transmission group is securely fastened to the support.

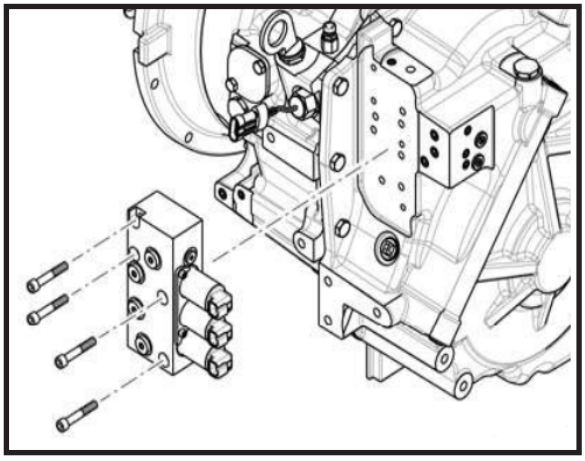

FIGURE 2: Remove the fixing bolts and control valve unit (**1**) from the transmission.

Note: remove only the elements that need to be replaced or overhauled; damaged or worn O-Ring must be replaced.

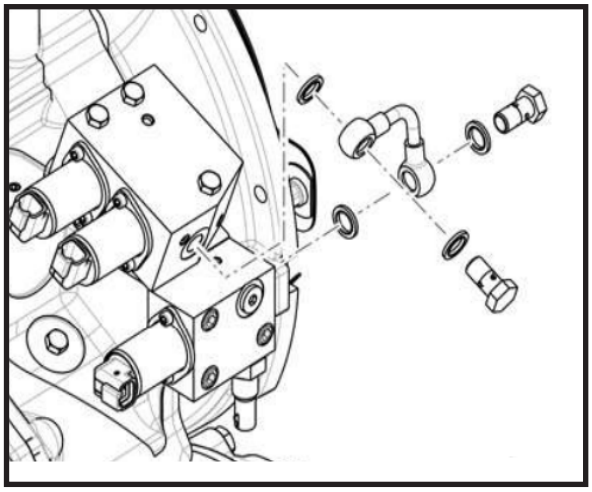

FIGURE 3: Remove the link pipe to control valve blocks (**2**) and (**3**).

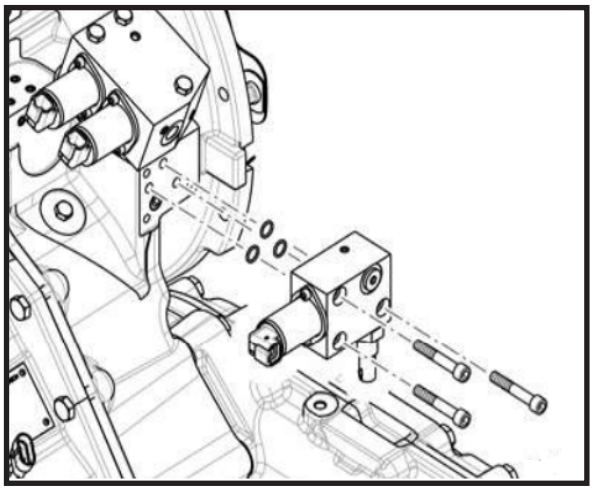

FIGURE 4: Remove the fixing bolts and control valve block (**3**) from the transmission.

Note: remove only the elements that need to be replaced or overhauled; damaged or worn O-Ring must be replaced.

FIGURE 5: Remove the pressure sensor and relative washer from control valve block (**3**).

FIGURE 6: Only if necessary, disassemble the pressure sensor (with relative washer) from the straight connector.

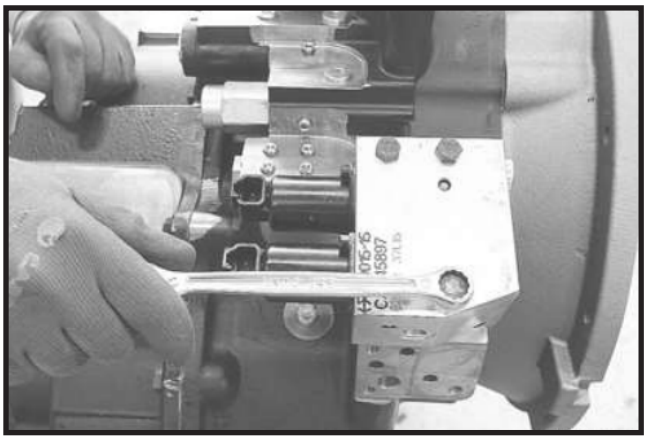

FIGURE 7: Remove the fixing bolts and control valve block (**2**) from the transmission.

Note: remove only the elements that need to be replaced or overhauled; damaged or worn O-Ring must be replaced.

Oil Pump

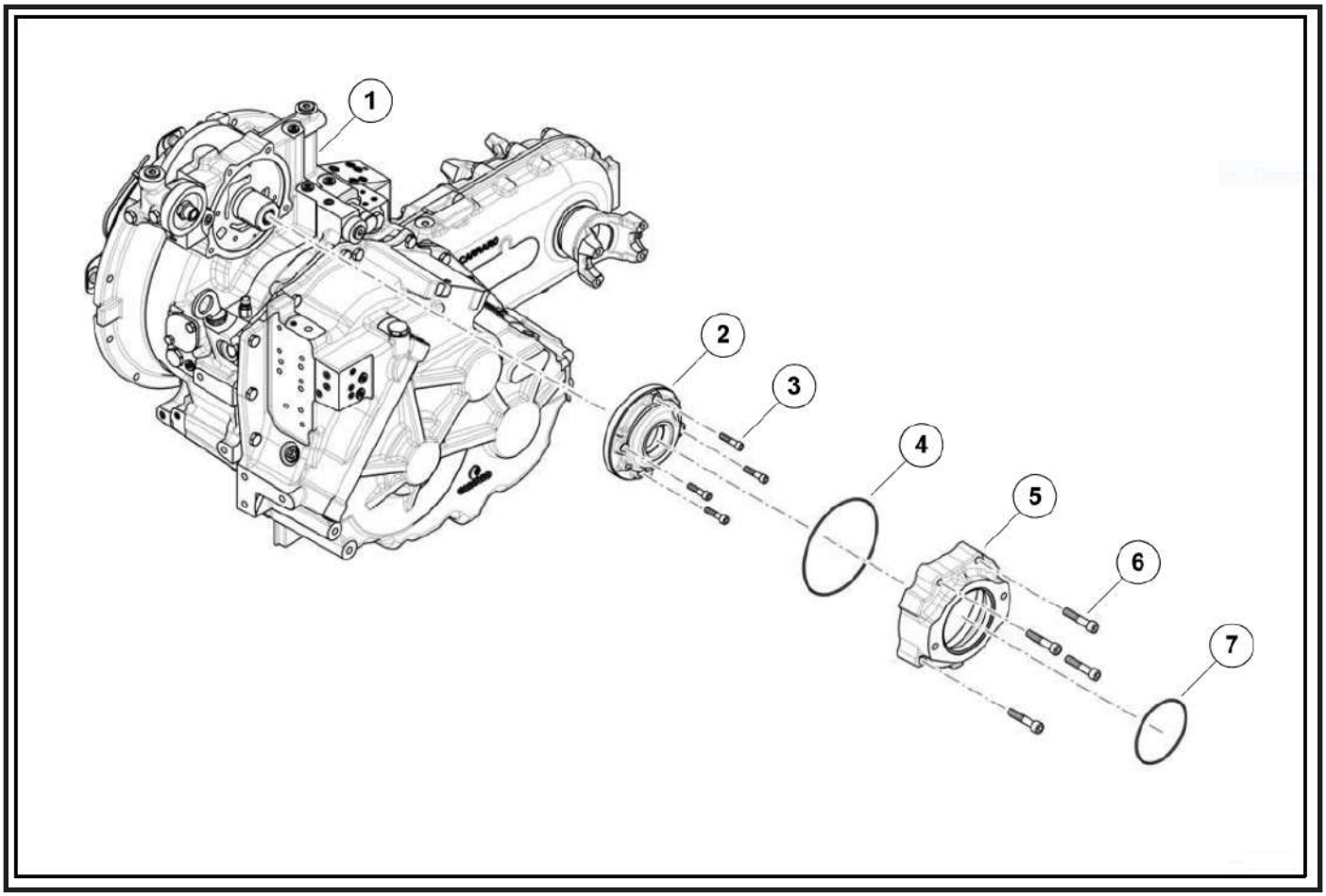

Assembly

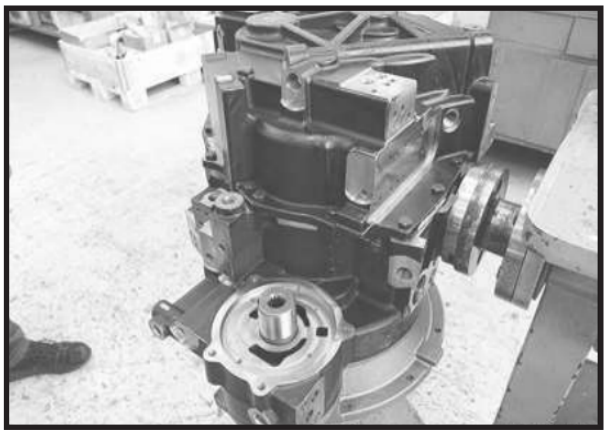

FIGURE 8: **DANGER** Accidental fall of transmission heavy parts can result in serious injury to the operator; verify that the support is stable and correctly anchored, check that the whole transmission group is securely fastened to the support.

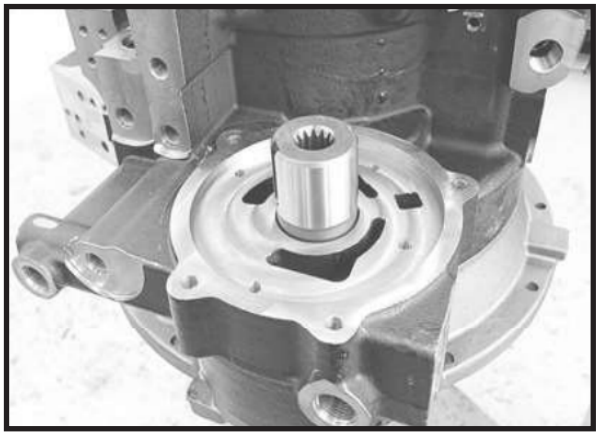

FIGURE 9: Clean with care the oil pump seat on the housing (**1**).

Apply a thin film of transmission oil on the coupling seat.

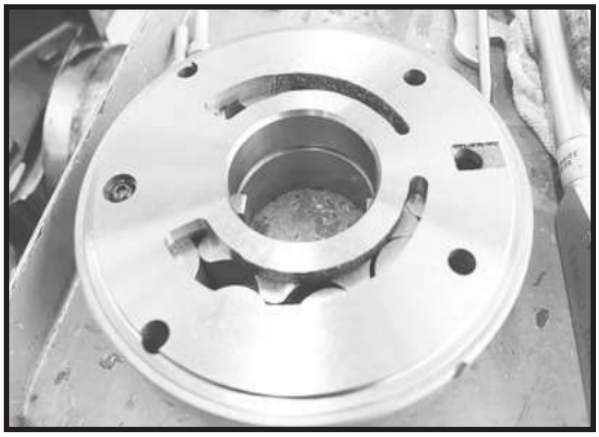

FIGURE 10: Clean with care the oil pump (**2**).

Apply a thin film of transmission oil on the coupling seat.

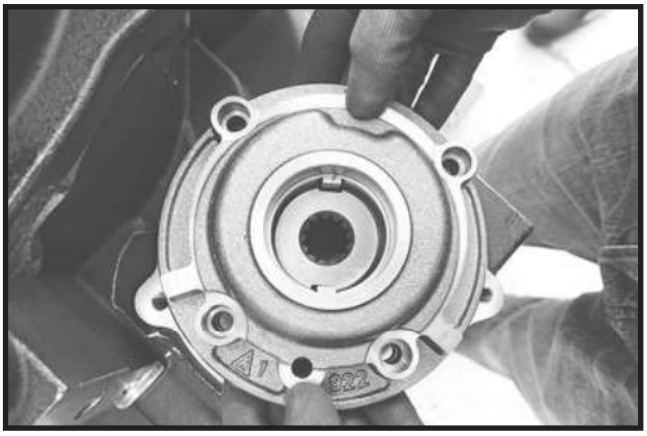

FIGURE 11: Assemble the oil pump (**2**) matching the holes of fastening bolts.

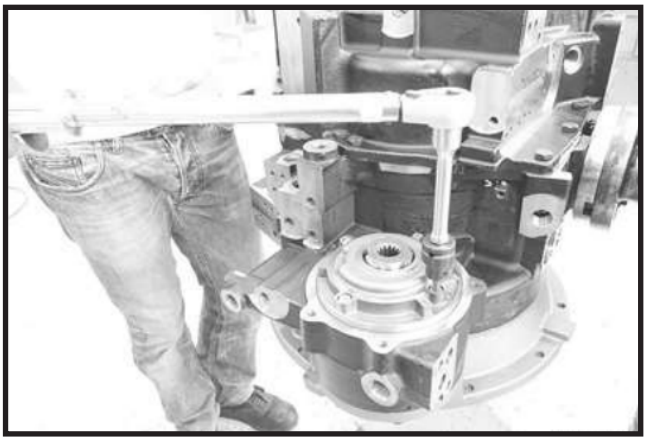

FIGURE 12: Assemble the bolts (**3**).

Tighten the bolts to prescribed torque.

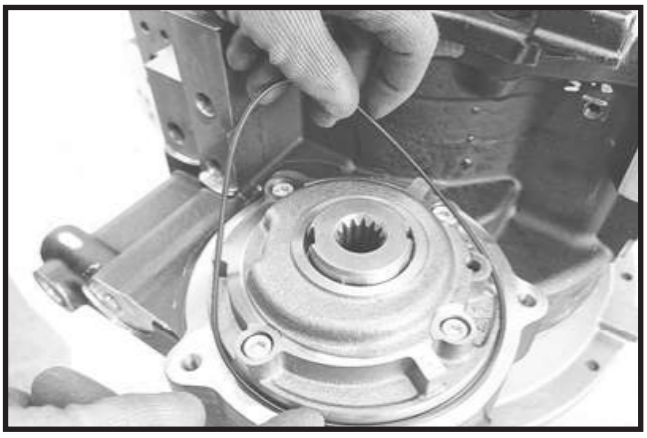

FIGURE 13: Lubricate and assemble new O-Ring (**4**) to the pump (**2**).

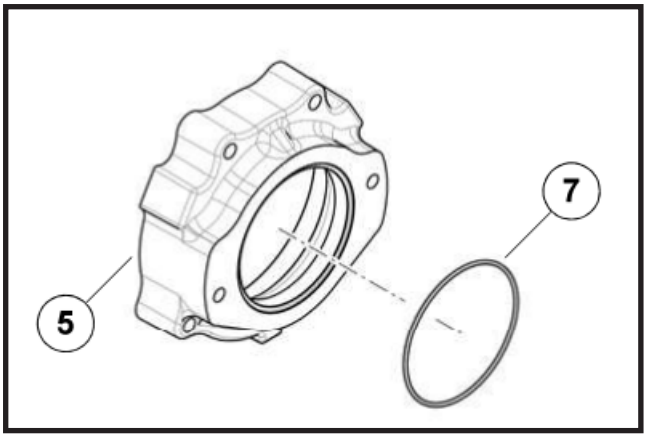

FIGURE 14: Lubricate and assemble new O-Ring (**7**) to the flange (**5**).

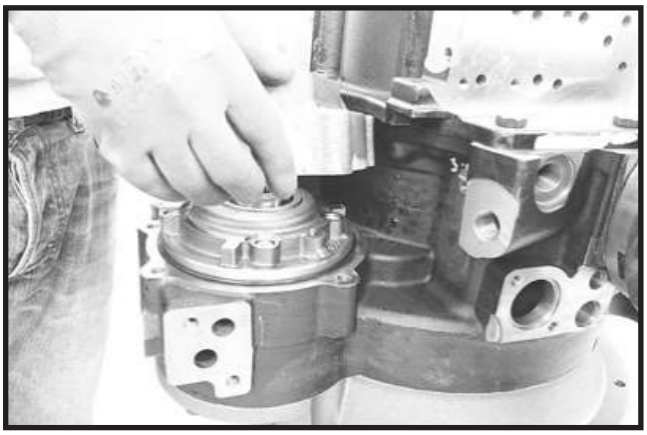

FIGURE 15: Assemble the flange (**5**).

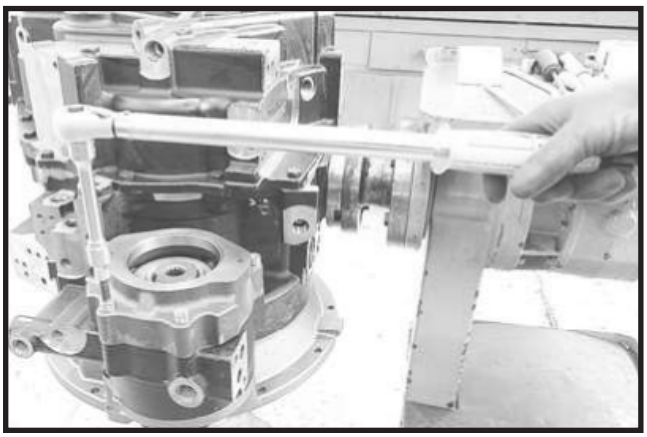

FIGURE 16: Assemble the bolts (**6**).

Tighten the bolts to prescribed torque.

Disassembly

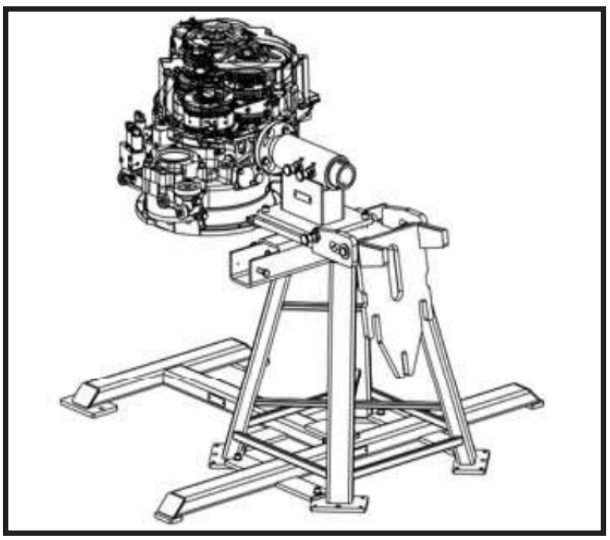

FIGURE 1: Drain oil from transmission.

Install the transmission on the appropriate special stand.

See: Special Tools in Product Data.

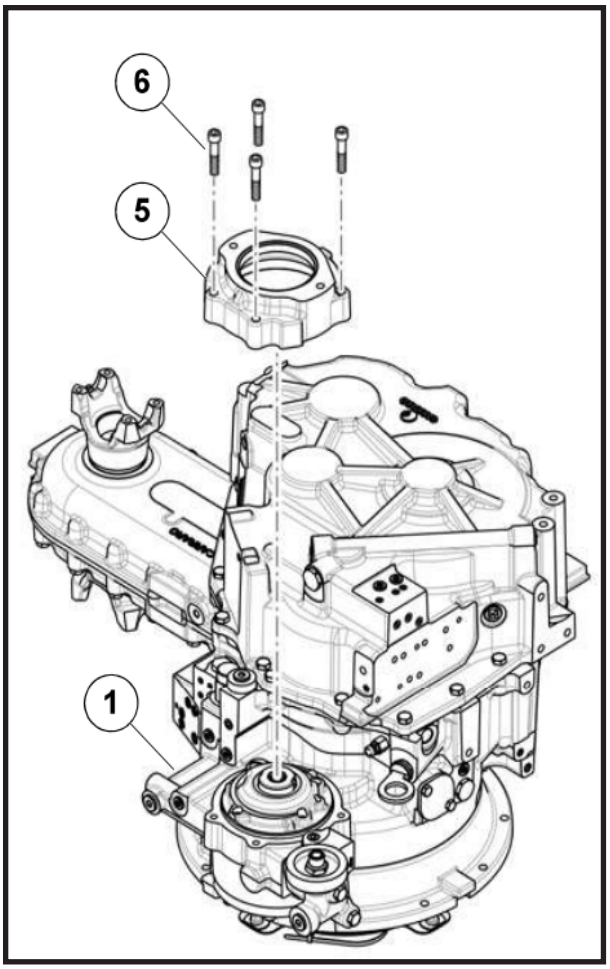

FIGURE 2: Remove the bolts (**6**).

Remove the flange (**5**).

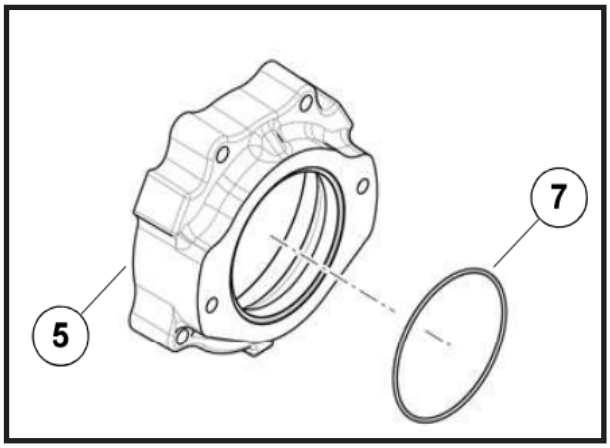

FIGURE 3: Remove only the elements that need to be replaced or overhauled

Note: damaged or worn O-Ring must be replaced.

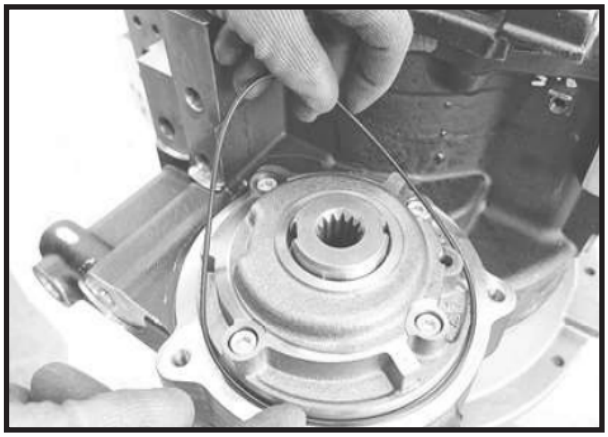

FIGURE 4: **Note**: if the flange has been removed, it is advisable to replace the O-Ring of oil pump.

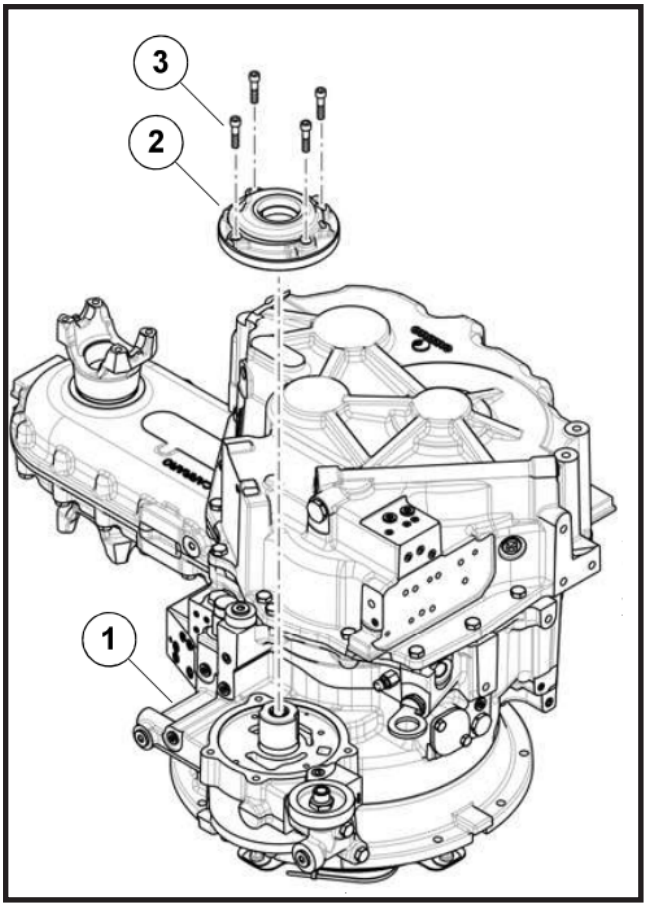

FIGURE 5: Remove the bolts (**3**).

Extract the oil pump (**2**).

Engine Flange/Hydraulic Motor and Pump Shafts Group

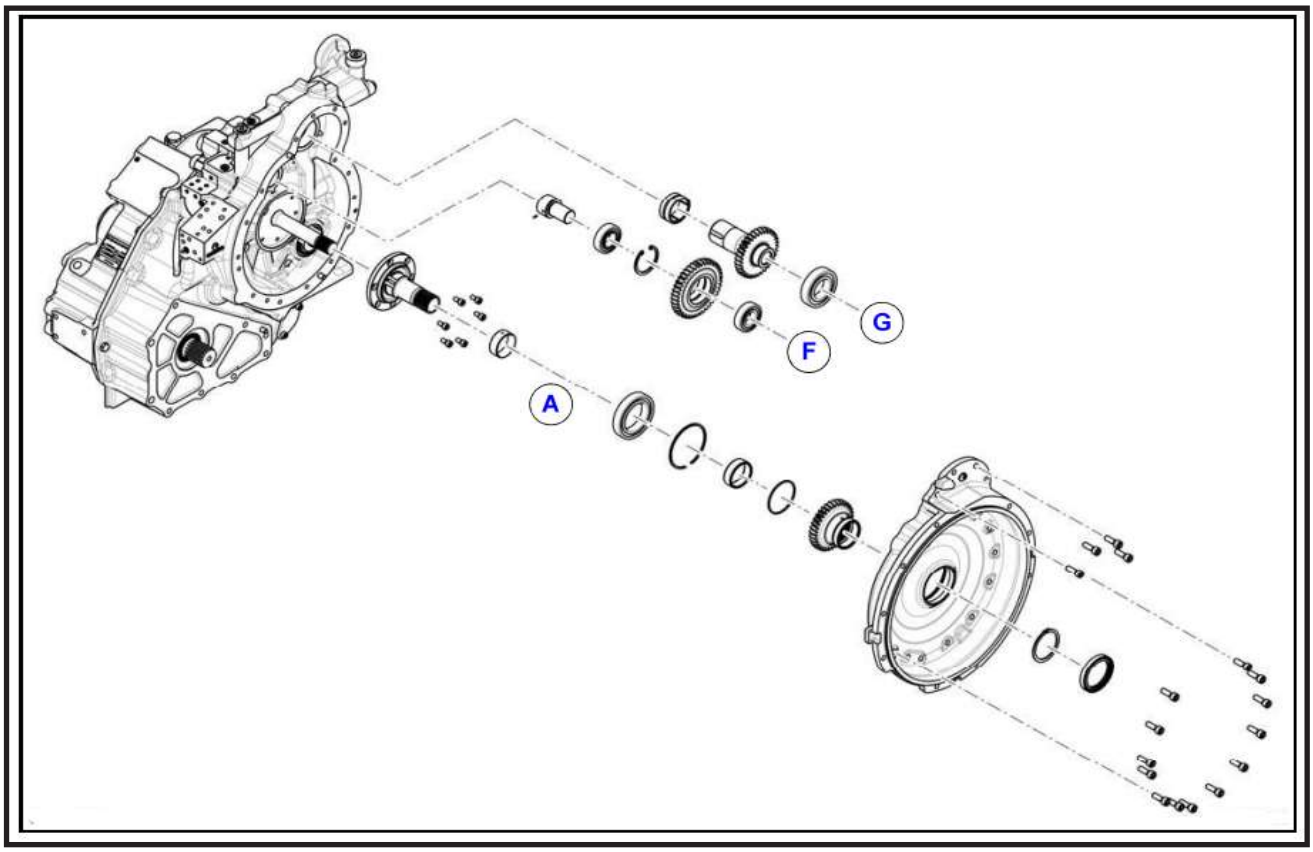

Transmission Suppor

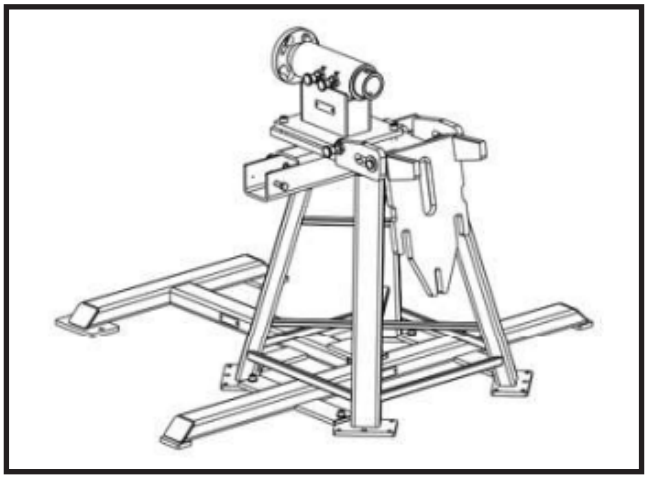

FIGURE 1: Install the transmission on the appropriate special stand.

WARNING

Accidental fall of transmission heavy parts can result in serious injury to the operator; verify that the support is stable and correctly anchored, check that the whole transmission group is securely fastened to the support.

Hydraulic Motor and Pump Shafts Group Installation

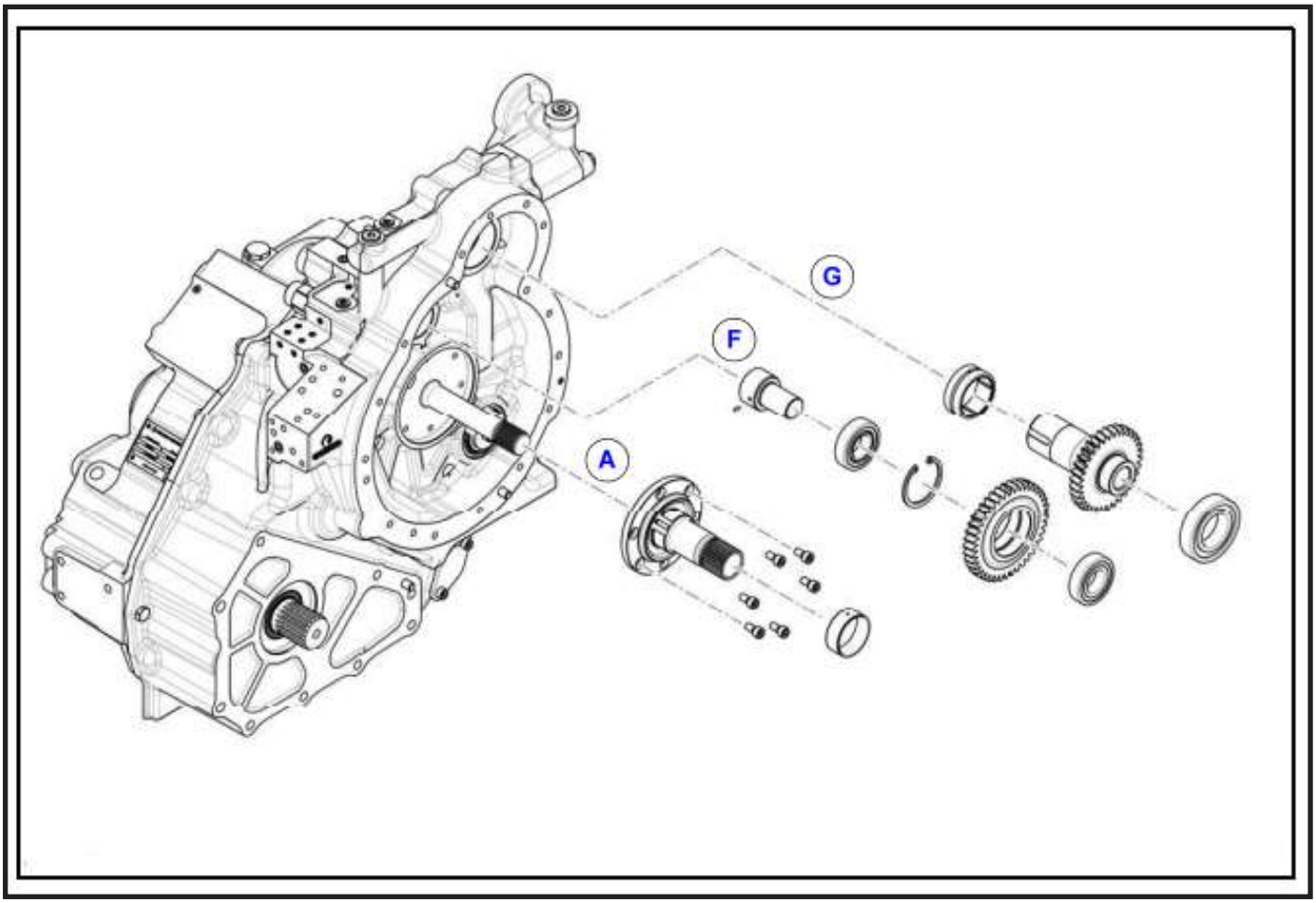

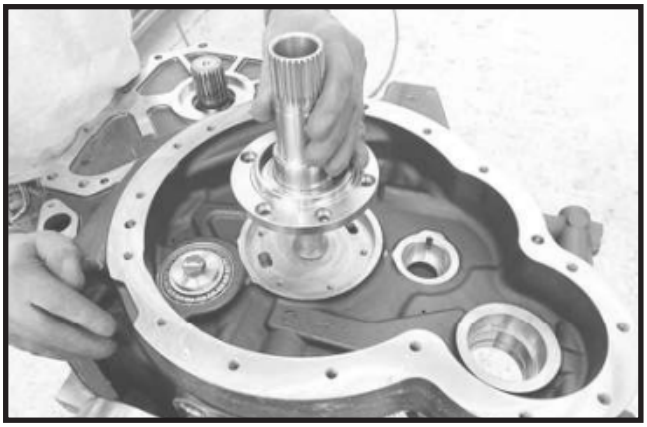

FIGURE 1: Assemble the converter support flange on axis (A).

FIGURE 2: Assemble the flange fixing bolts.

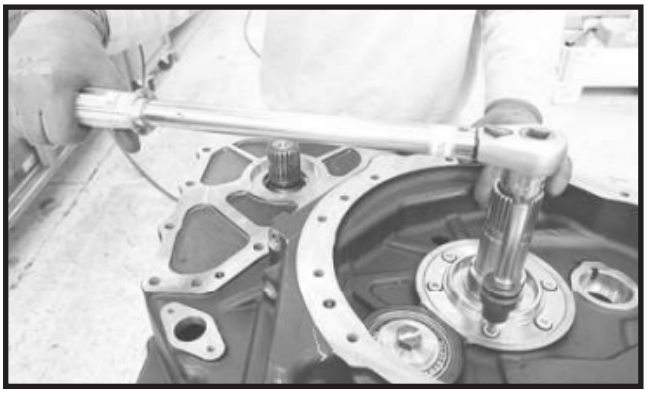

FIGURE 3: Tighten the bolts to prescribed torque.

FIGURE 4: Heat the shown bush at 302 °F (150 °C).

FIGURE 5: Clean with care the coupling surface of bushing.

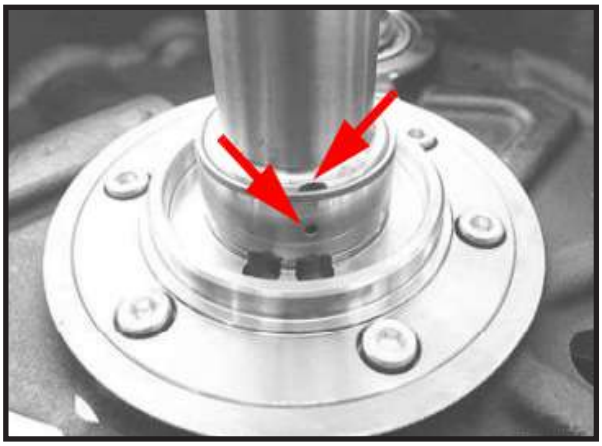

FIGURE 6: Assemble the bush in shown position.

FIGURE 7: Assemble shown snap ring on gear of axis (**F**) with proper pliers.

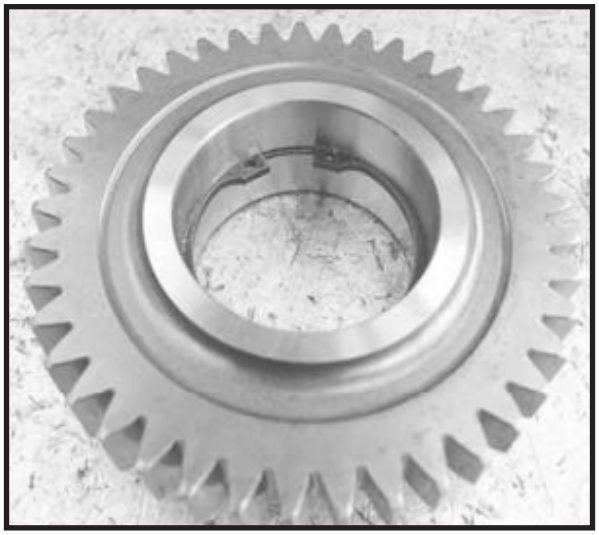

FIGURE 8: Check that snap ring is completely seated in its groove.

FIGURE 9: Place the outer ring of roller bearing on gar.

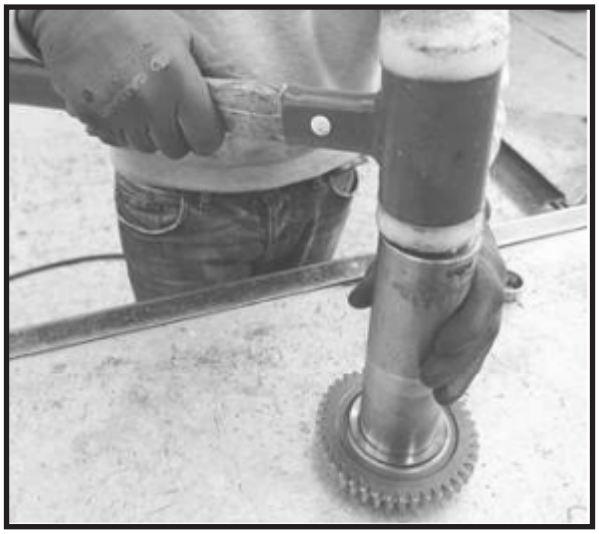

FIGURE 10: Force the outer ring of roller bearing on gear, by using a special driver and hammer.

See: Special tools, in Product Data.

FIGURE 11: Overturn the gear.

Clean with care the bearing seat.

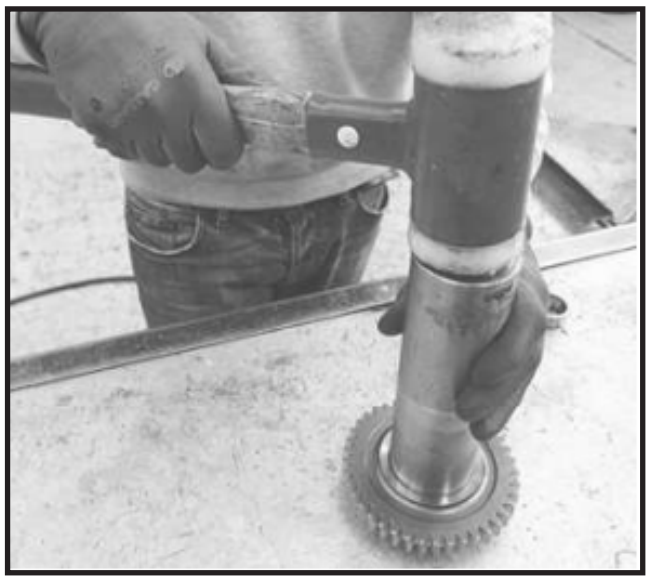

FIGURE 12: Force the outer ring of second roller bearing on gear, by using a special driver and hammer.

See: Special tools, in Product Data.

FIGURE 13: Heat the shown bearing cone at 284 °F (140 °C).

CAUTION

Burn Hazard; wear safety protections required by current safety regulations.

FIGURE 14: Clean with care the shaft with snap ring of axis (F). **Note**: assemble the pin if it has been previously removed.

FIGURE 15: Place on shaft the heated bearing cone and gear in the shown position.

Force the group on gear, by using a special driver and a press.

See: Special tools, in Product Data.

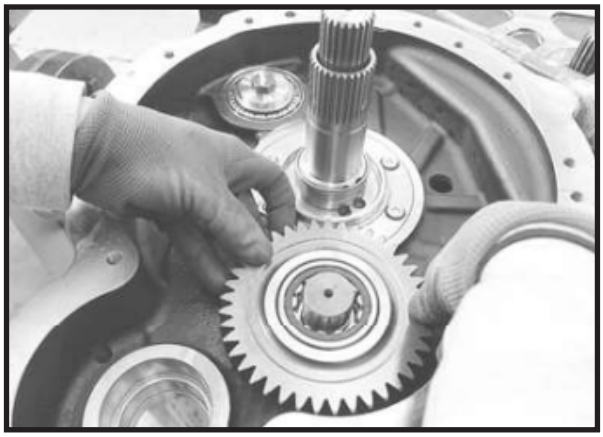

FIGURE 16: Assemble the whole assembly on axis (**F**) in the transmission housing.

Note: check correct coupling of shaft to transmission housing as shown at the next step.

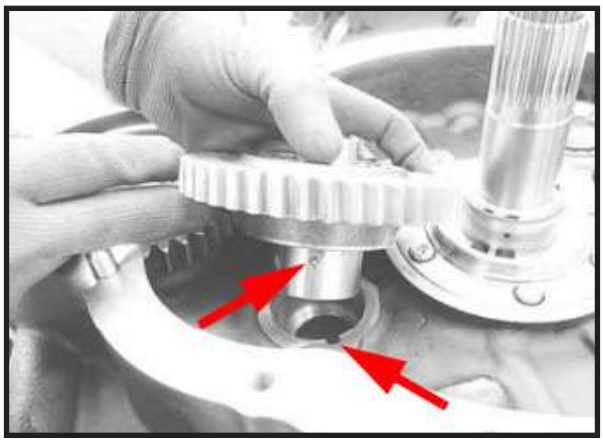

FIGURE 17: **Important**: assemble the whole group gear/shaft with lock pin in shown position.

FIGURE 18: Heat the inner ring of roller bearing cone at 284°F (140°C).

CAUTION

Burn Hazard; wear safety protections required by current safety regulations.

FIGURE 19: Force the inner ring of roller bearing into gear and on shaft, by using a special driver and hammer. **See**: Special tools, in Product Data.

FIGURE 20: Verify correct assembly of the group on axis (F).

FIGURE 21: Position the shown needle bearings on seat of axis (**G**).

FIGURE 22: Force the bearing into its seat by using a suitable driver and hammer.

FIGURE 23: Clean with care the shown gear with shaft. Position the group as shown.

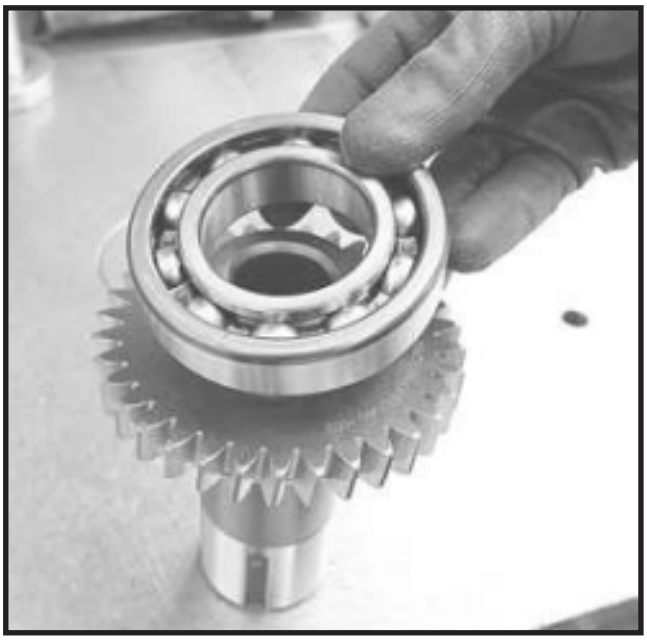

FIGURE 24: Place the ball bearing on gear.

FIGURE 25: Force the bearing into its seat by using a suitable driver and hammer.

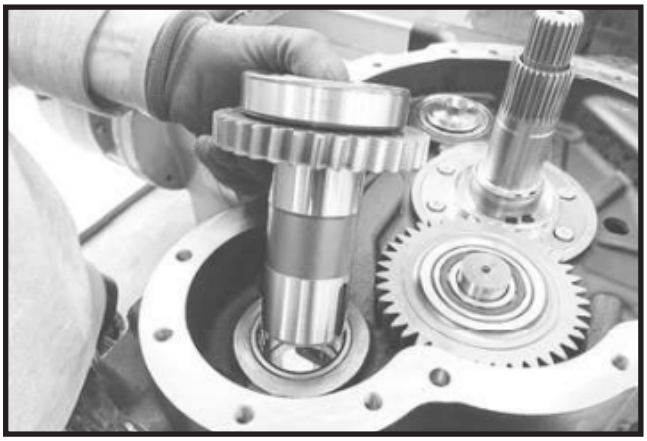

FIGURE 26: Assemble the whole assembly on axis (**G**) in the transmission housing.

Hydraulic Motor and Pump Shafts Group Disassembly

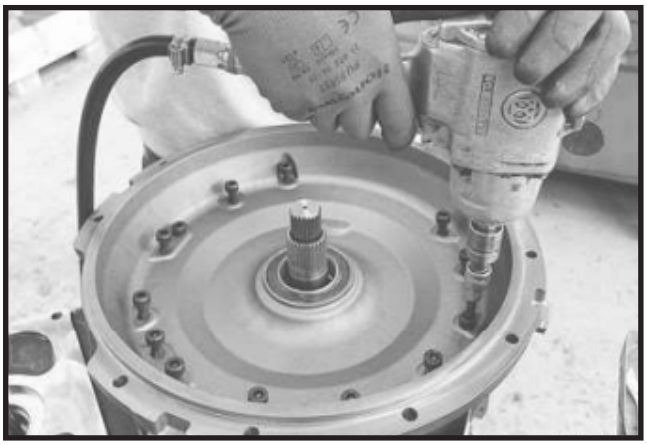

FIGURE 1: Unscrew the fastening bolts and remove the motor flange.

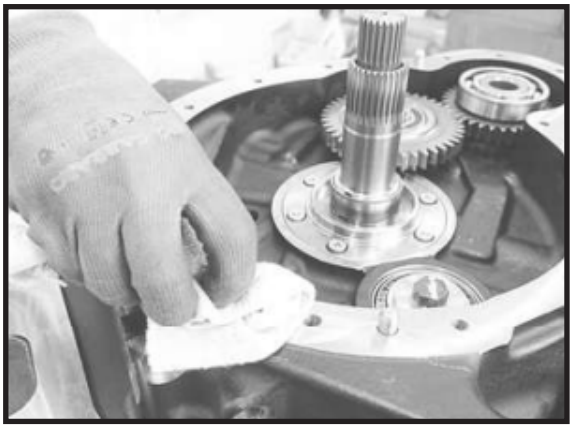

FIGURE 2: Clean with care the coupling surface, remove the oil where it is present.

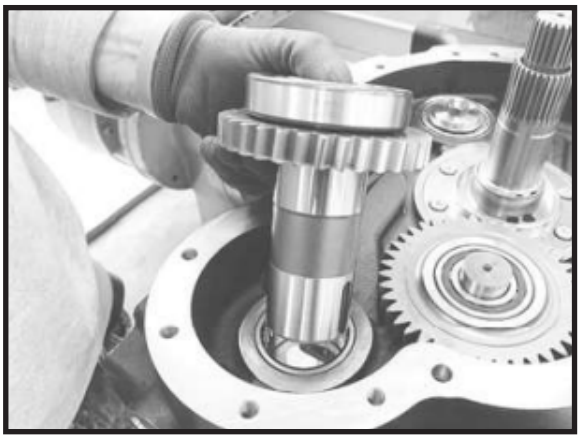

FIGURE 3: Remove the whole assembly on axis (**G**) from the transmission housing.

Remove only the elements that need to be replaced or overhauled

Important: damaged or worn parts must be replaced.

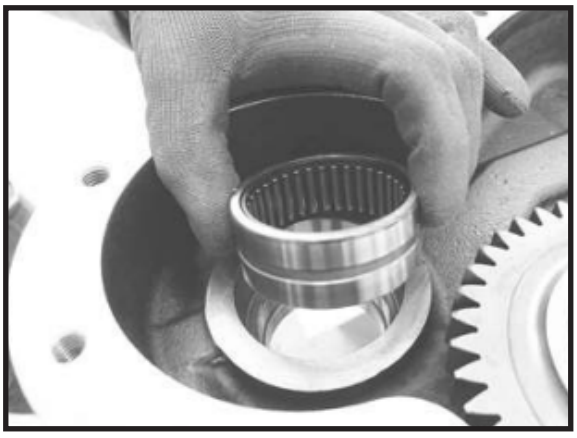

FIGURE 4: Remove the shown needle bearings.

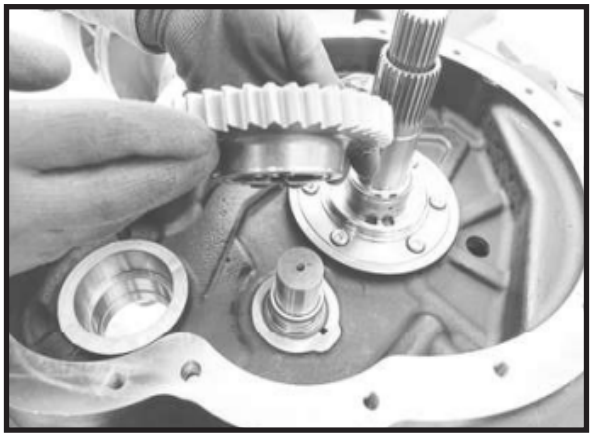

FIGURE 5: Remove the gear from axis (**F**).

Disassemble only the elements that need to be replaced or overhauled

Important: damaged or worn parts must be replaced.

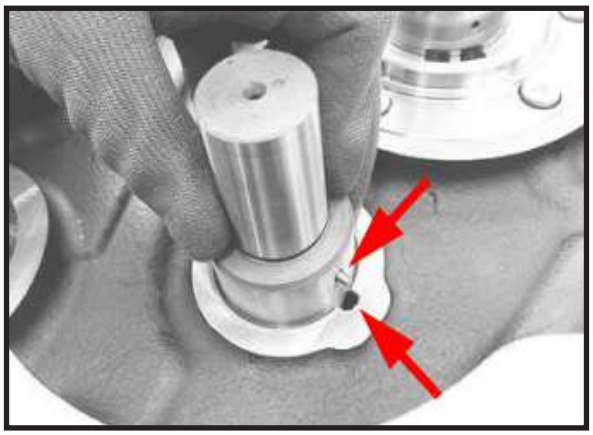

FIGURE 6: Remove the shaft.

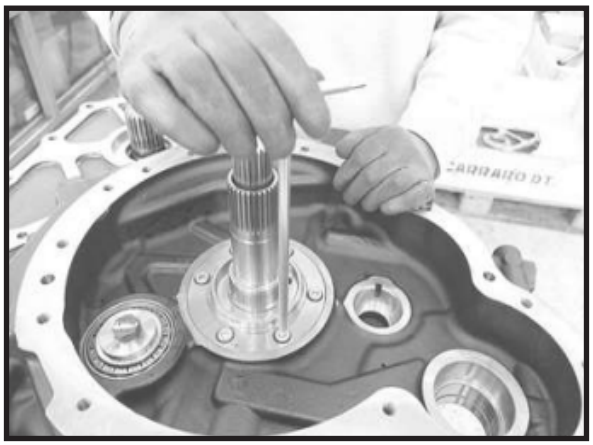

FIGURE 7: Remove the fastening bolts of converter support flange on axis (**A**).

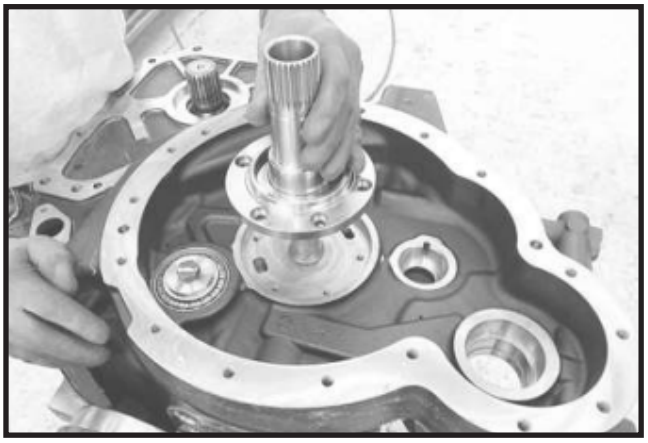

FIGURE 8: Remove the converter support flange.

Motor Flange Group Installation

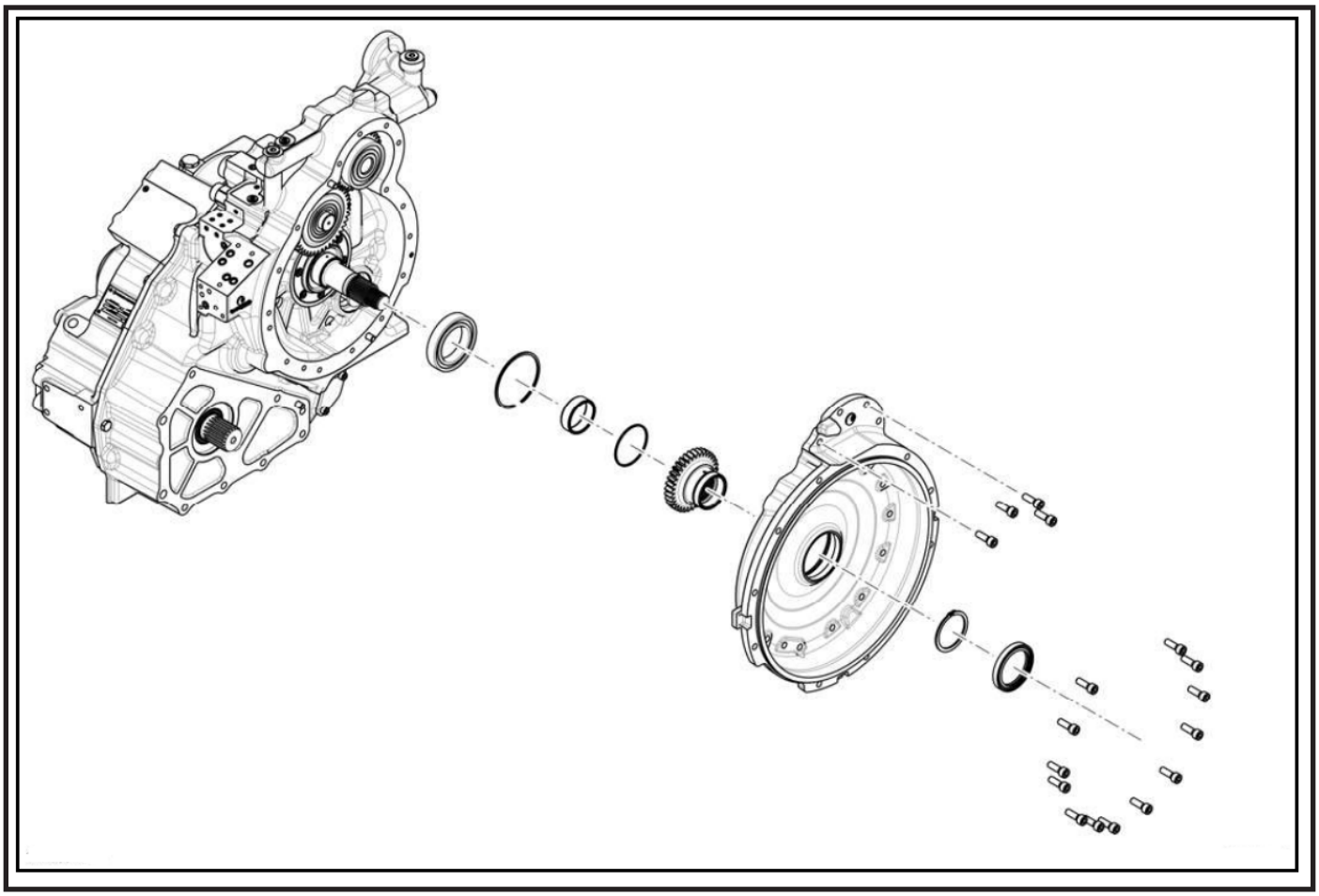

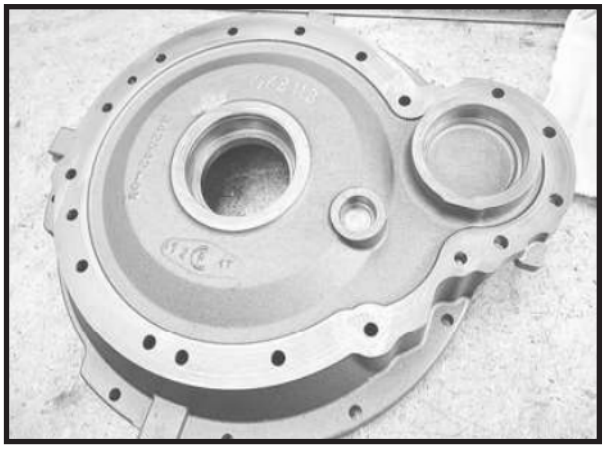

FIGURE 1: Clean with care the engine flange and place it on a work bench.

FIGURE 2: Place the ball bearing on relative seat.

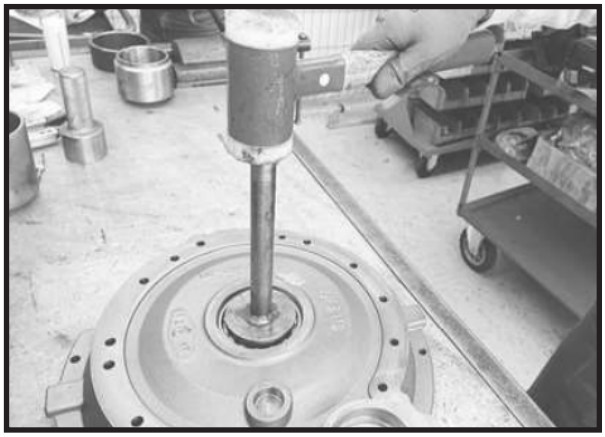

FIGURE 3: Force the bearing into its seat by using a suitable driver and hammer.

FIGURE 4: Assemble shown snap ring. Check that snap ring is completely seated in its groove.

FIGURE 5: Position the gear as shown.

Clean with care the bearing seat.

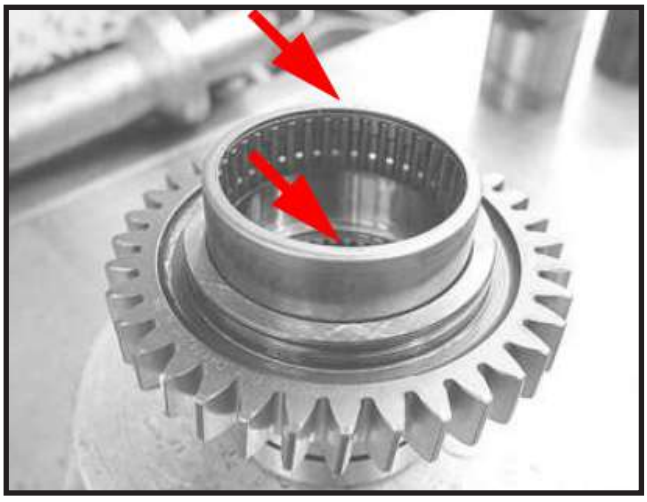

FIGURE 6: Position the shown needle bearings on the gear. **Important**: the bearing must be oriented with the flat side (denoted by marking) upwards.

See: next figure.

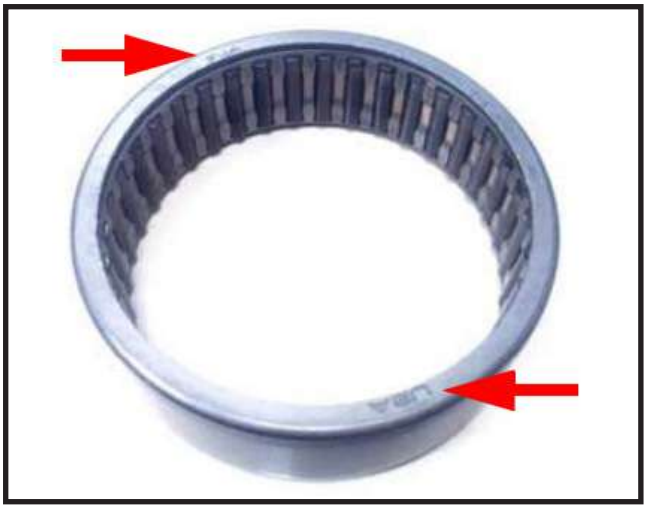

FIGURE 7: **Important**: the bearing must be oriented with the flat side (denoted by marking) upwards; in figure

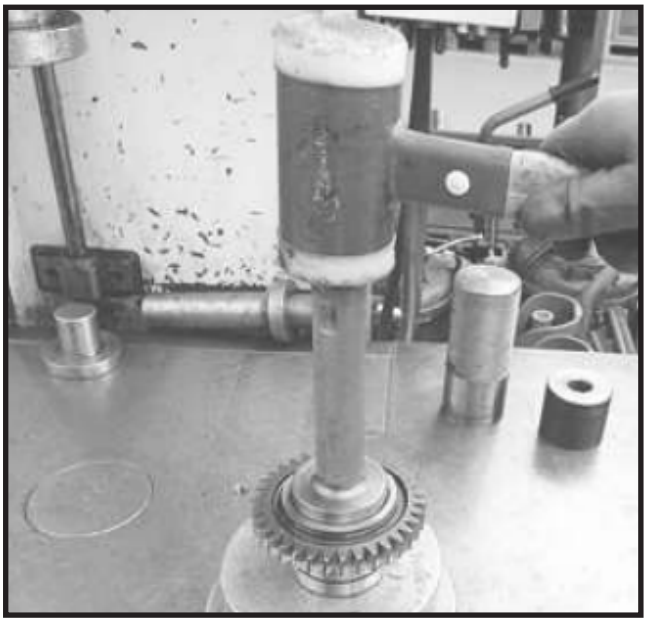

FIGURE 8: Force the bearing into its seat by using a suitable driver and hammer.

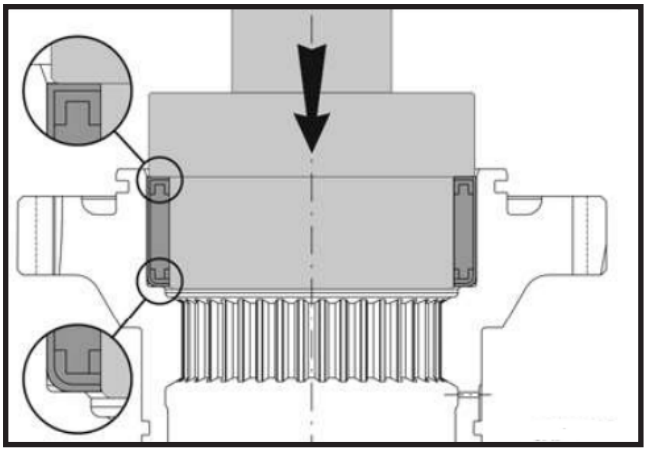

FIGURE 9: **Important**: the bearing must be oriented as shown; push the bearing to the end.

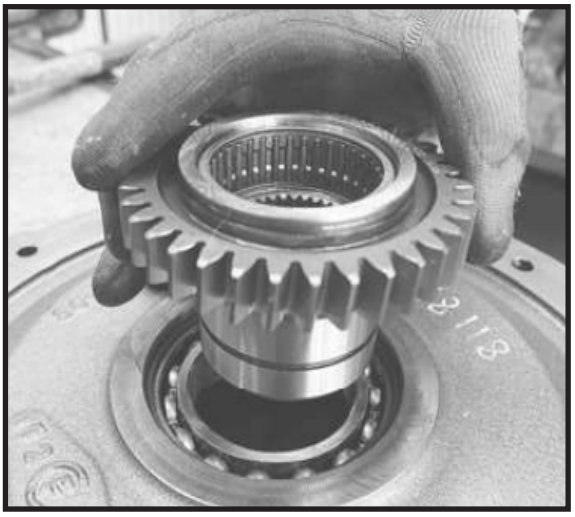

FIGURE 10: Assemble the gear to motor flange as shown.

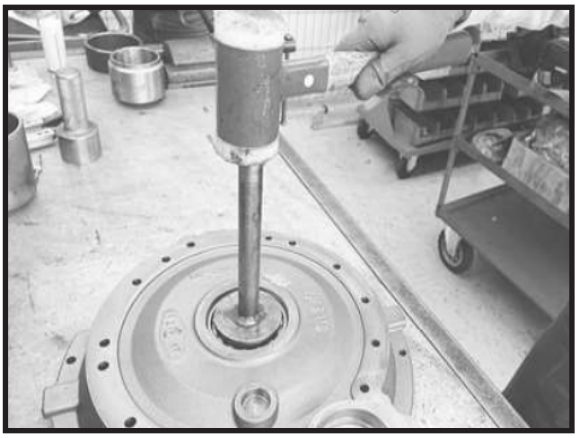

FIGURE 11: Force the whole group into its seat by using a suitable driver and hammer.

FIGURE 12: **CAUTION** Burn Hazard; wear safety protections required by current safety regulations.

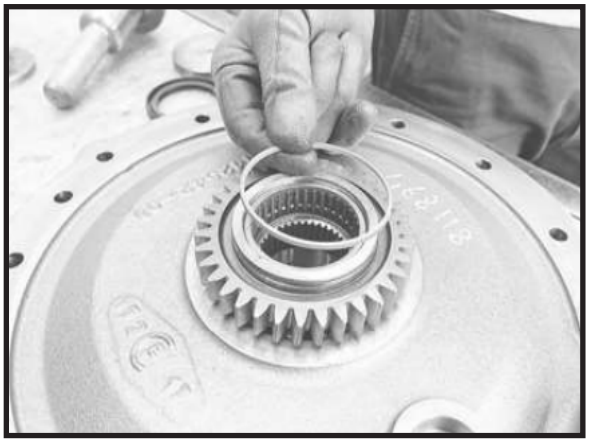

FIGURE 13: Assemble the new seal ring.

FIGURE 14: Assembly the special gauger on the seal ring.

See: Special Tools in Product Data.

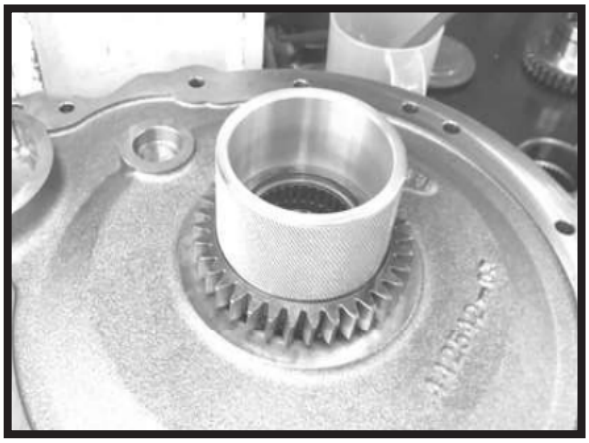

FIGURE 15: Leave the special gauger in place for a few minutes.

See: Special Tools in Product Data.

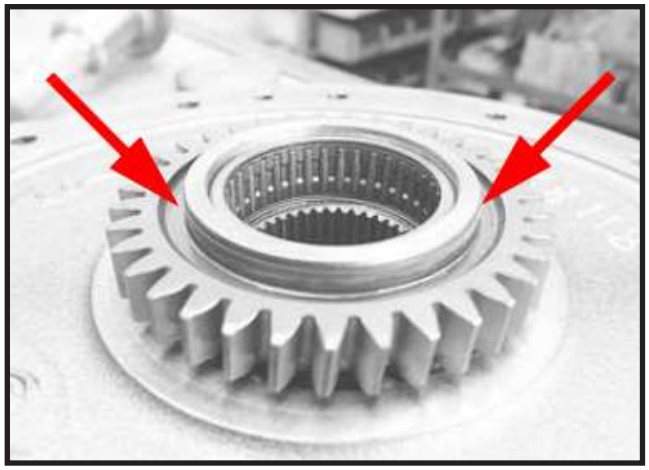

FIGURE 16: Remove the special gauger and check that seal ring is completely seated in its groove to avoid damage during assembly.

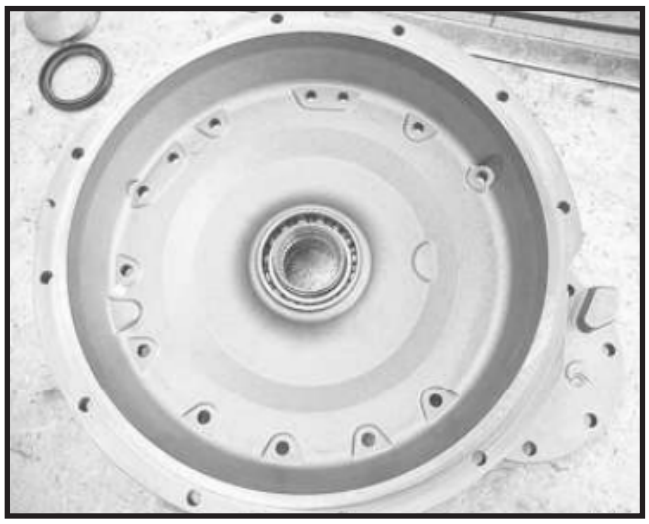

FIGURE 17: Overturn the engine flange on the work bench.

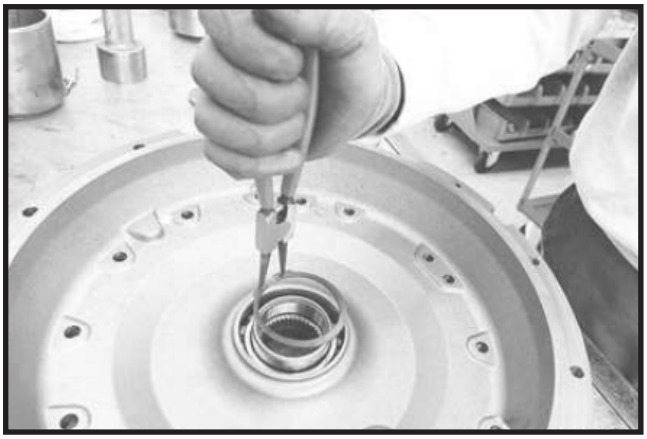

FIGURE 18: Assemble shown snap ring.

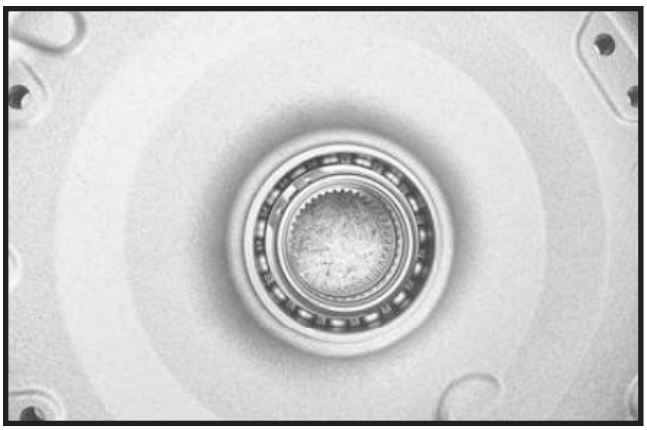

FIGURE 19: Check that snap ring is completely seated in its groove.

Align snap ring lugs with bearing lubrication hole

See: next figure.

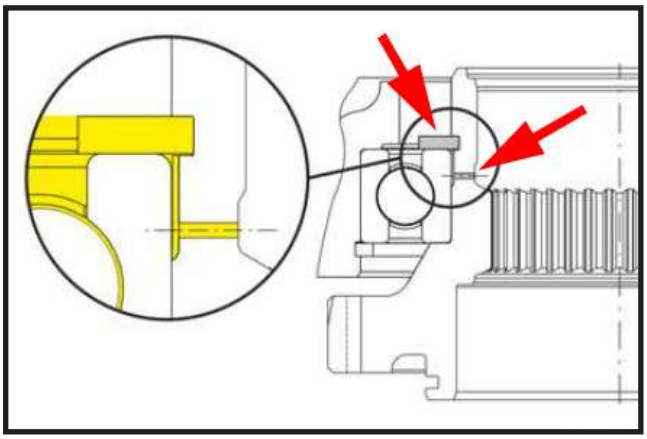

FIGURE 20: **Important**: align snap ring lugs with bearing lubrication hole; this is essential to ensure proper lubrication of the bearing.

FIGURE 21: Insert the centering bush for seal assembly.

See: Special Tools in Product Data.

FIGURE 22: Lubricate the seal ring with prescribed grease.

FIGURE 23: Place a new seal ring in shown position.

FIGURE 25: Assemble the new seal ring using the required special driver and a hammer.

See: Special Tools in Product Data

FIGURE 26: Remove the special tools.

See: Special Tools in Product Data.

FIGURE 27: Check that seal ring is properly assembled.

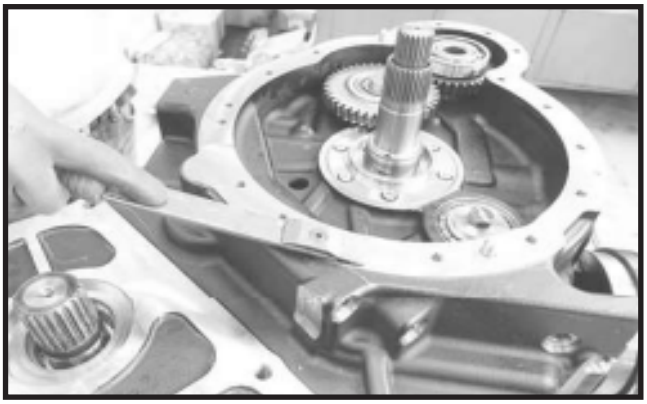

FIGURE 28: If necessary, remove the old adhesive from the transmission housing using a scraper.

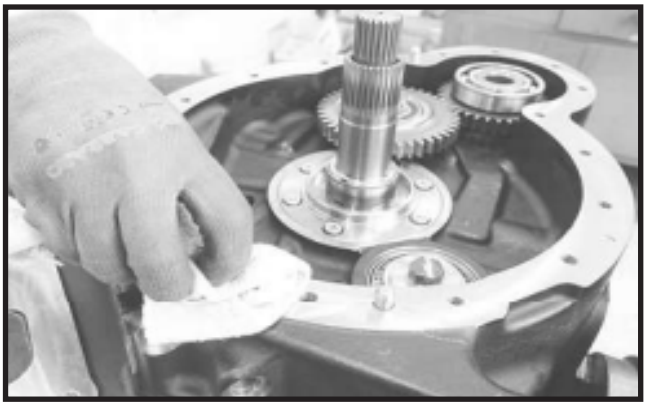

FIGURE 29: Clean with care the coupling surface.

FIGURE 30: Apply the prescribed sealant on the coupling surface.

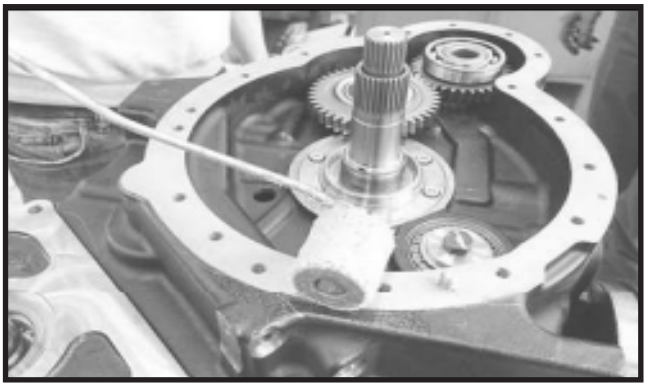

FIGURE 31: Spread the sealant evenly with a suitable roller

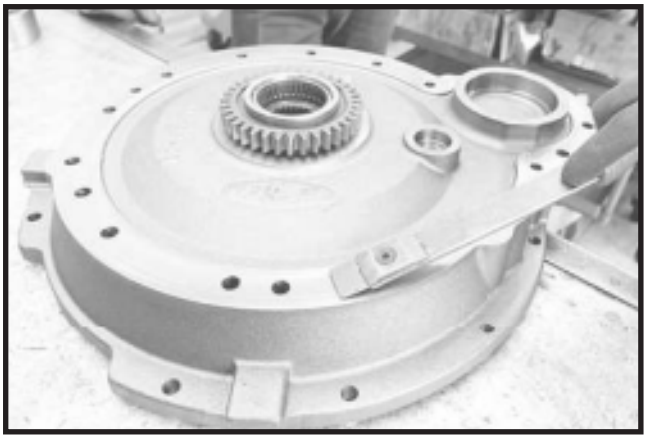

FIGURE 32: If necessary, remove the old adhesive from the engine flange using a scraper.

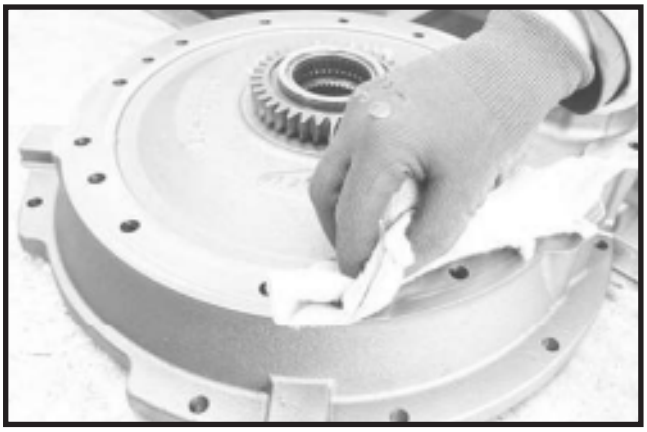

FIGURE 33: Clean with care the coupling surface.

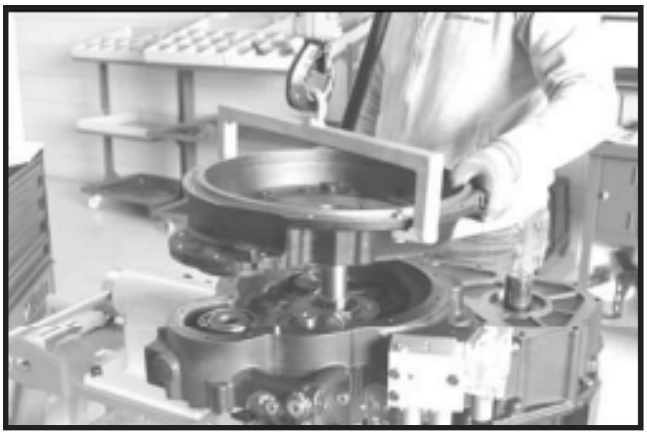

FIGURE 34: Overturn the engine flange and lift it with the proper special hook. **See**: Special tools, in Product Data. Place the engine flange on transmission housing aligning holes and shafts.

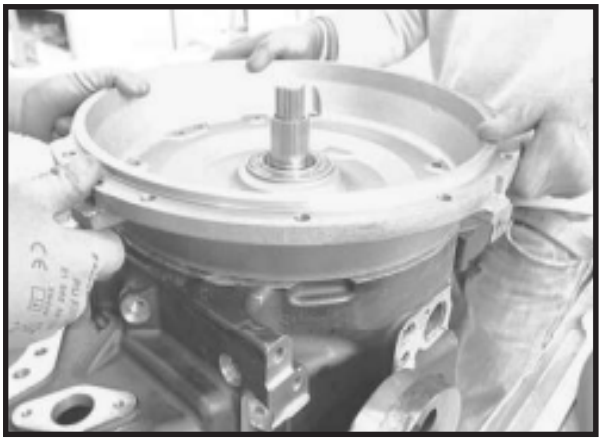

FIGURE 35: Assemble the engine flange to transmission housing. Remove the special hook.

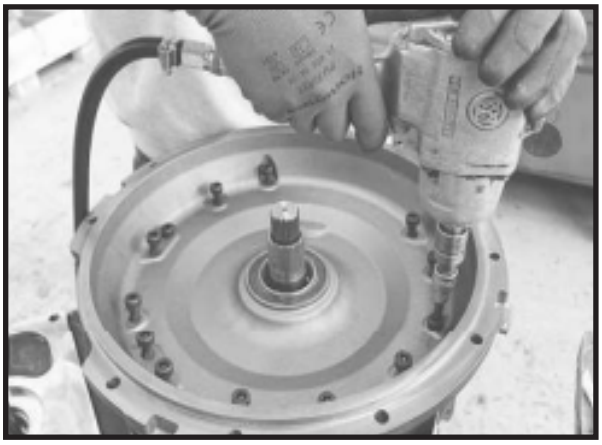

FIGURE 36: Assemble the fastening bolts.

FIGURE 37: Tighten the bolts to prescribed torque with dynamometric wrench. **See**: C.6 Remove excess of sealant in the bonding area of the half-housings.

Motor Flange Disassembly

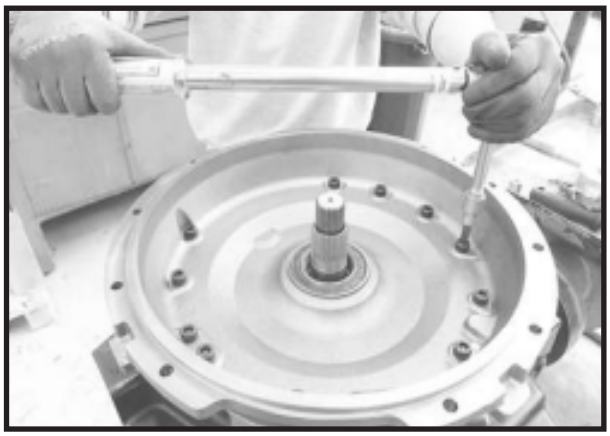

FIGURE 1: Unscrew the fastening bolts to remove the motor flange.

FIGURE 2: Disassemble the engine flange and lift it with the proper special hook. See: Special tools, in Product Data. Place the engine flange on suitable workbench, then remove the special hook.

FIGURE 3: To remove the shaft is necessary remove the seal ring. Note: destructive operation for the seal ring; the seal ring must be replaced. Remove only the elements that need to be replaced or overhauled.

FIGURE 4: Remove shown snap ring.

FIGURE 5: Overturn the engine flange and remove shown seal ring. **Note**: destructive operation for the seal ring; the seal ring must be replaced.

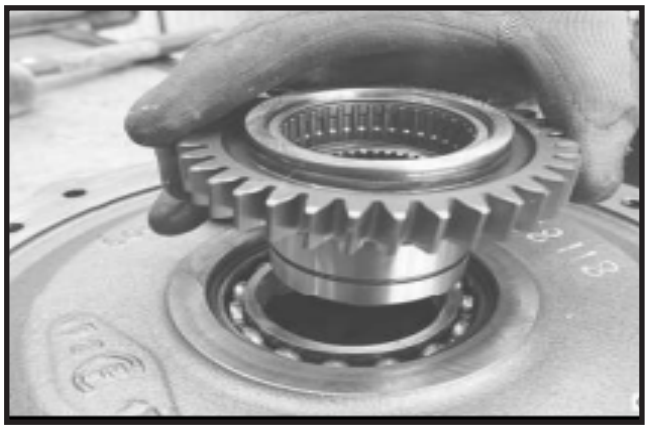

FIGURE 6: Remove the shaft and disassemble other parts. **See**: main scheme. Remove only the elements that need to be replaced or overhauled.

FIGURE 7: Remove the shown snap ring to disassemble the ball bearing from the engine flange.

Front Housing Group
Idler Gear Group Assembly

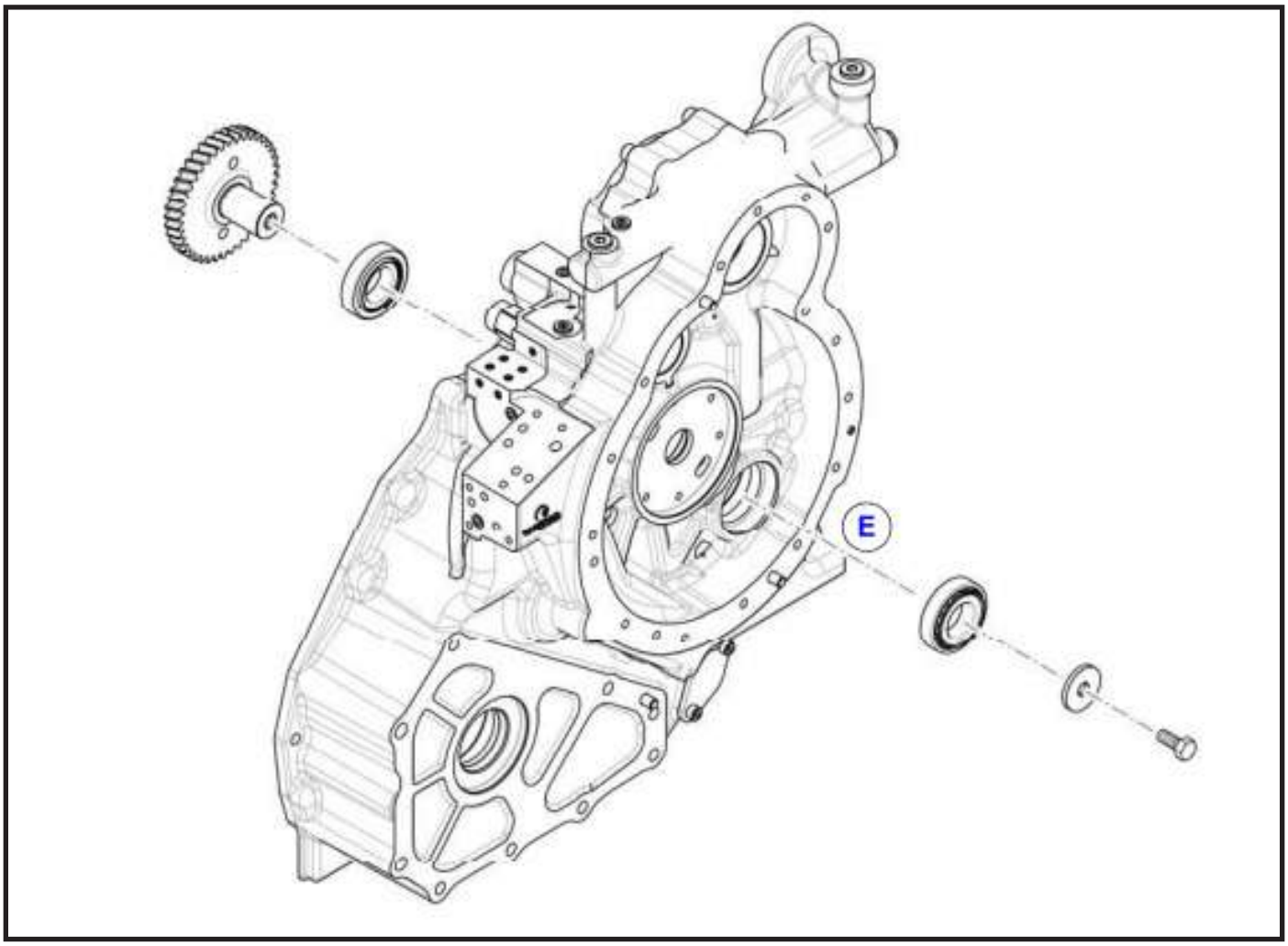

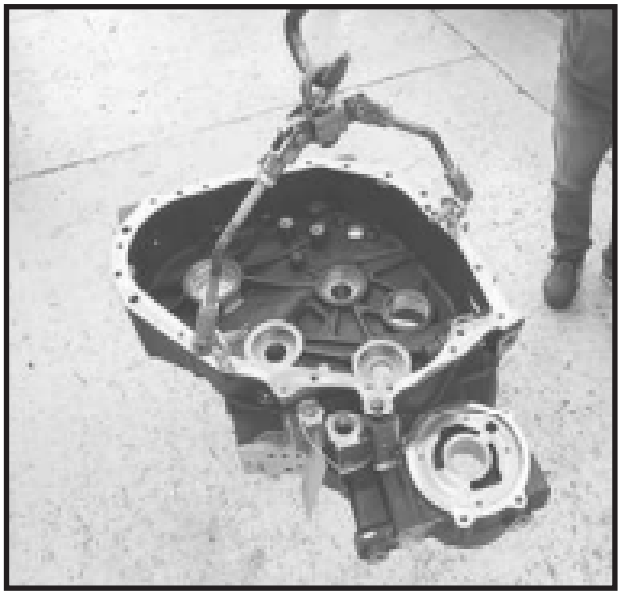

FIGURE 1: Move the transmission front housing with suitable lifting system.

WARNING

Accidental fall of transmission housing can result in serious injury to the operator; verify that the unit is securely fastened.

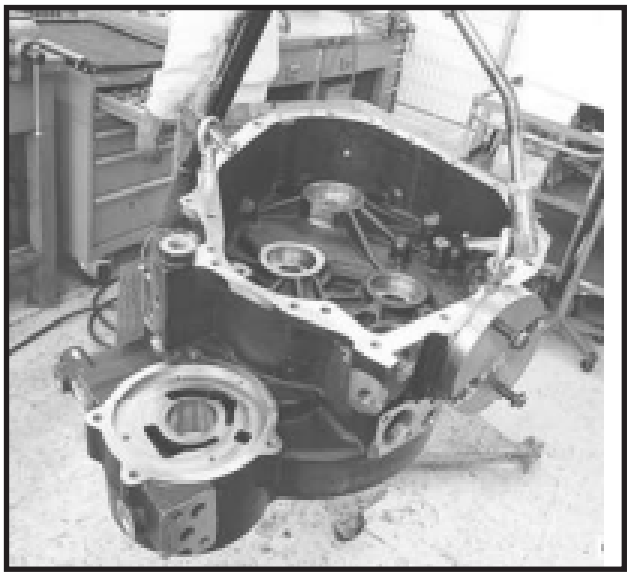

FIGURE 2: Assemble the special support fastening flange.

See: Special Tools in Product Data.

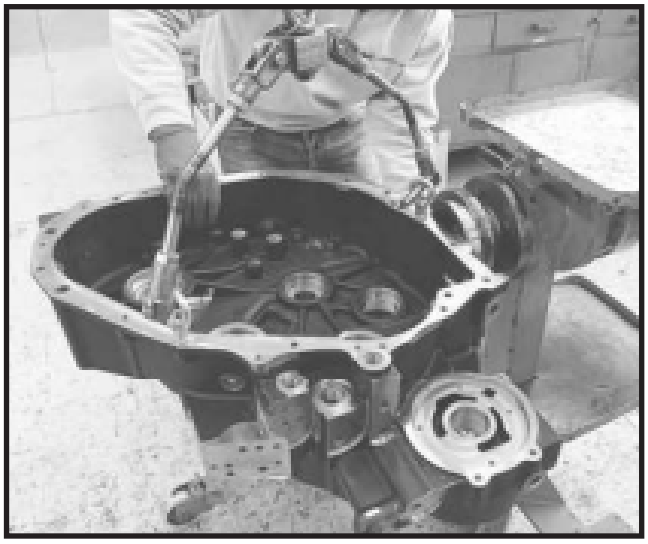

FIGURE 3: Install the housing on appropriate special stand.

See: Special Tools in Product Data.

WARNING

Accidental fall of transmission housing can result in serious injury to the operator; verify that the unit is securely fastened.

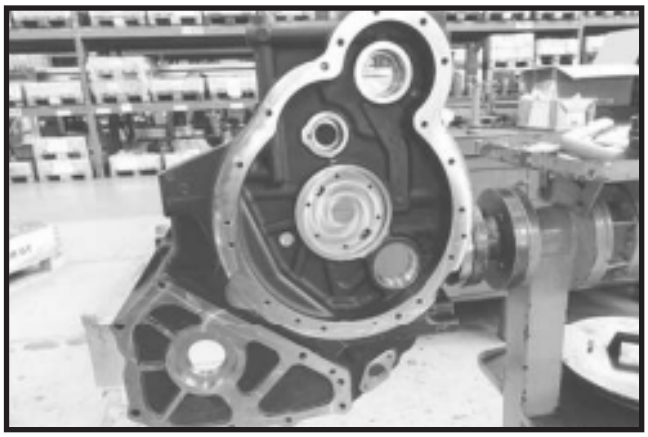

FIGURE 4: Rotate the front housing as shown. Lock the front housing in shown position.

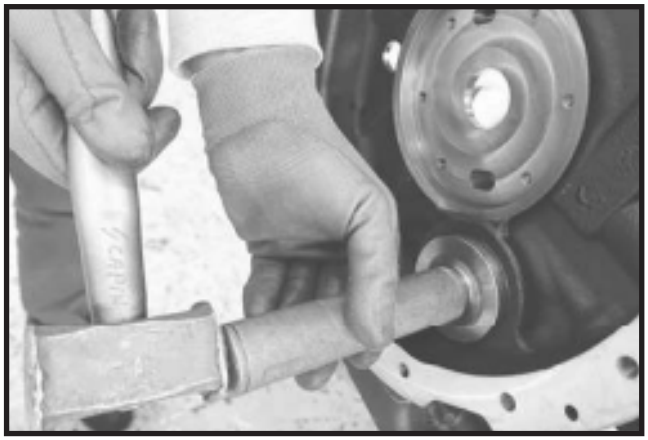

FIGURE 5: Assemble indicated bearing cup in relative seat, using proper driver and hammer.

Note: push bearing cup to the end.

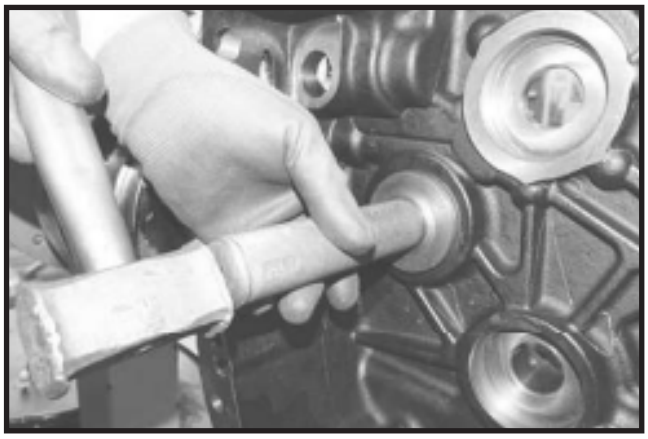

FIGURE 6: Assemble the bearing cup on seat on the opposite side of front housing, **Note**: push bearing cup to the end.

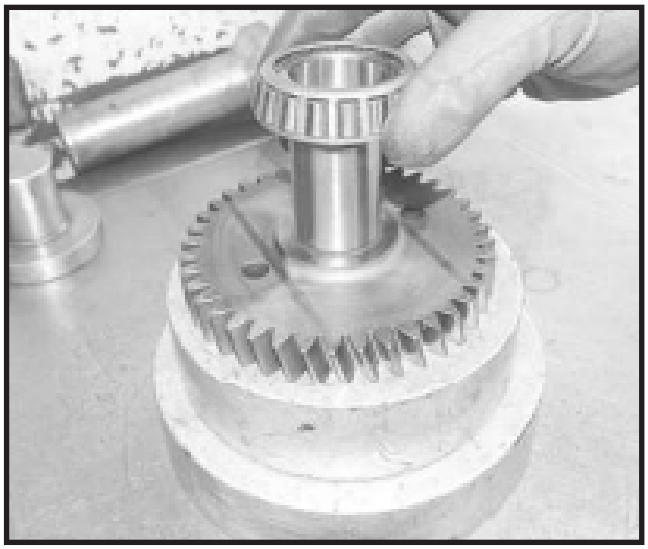

FIGURE 7: Place the bearing cone on idler gear as shown. **See**: orient the bearings as shown.

FIGURE 8: Force the bearing cone on idler gear as shown. Note: push bearing cone to the end.

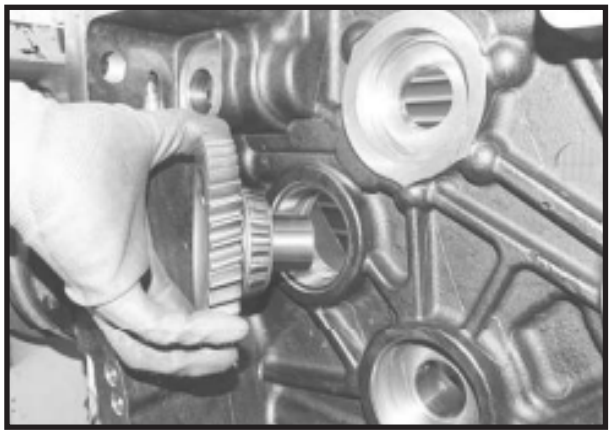

FIGURE 9: Assemble the gear/bearing group as shown in figure.

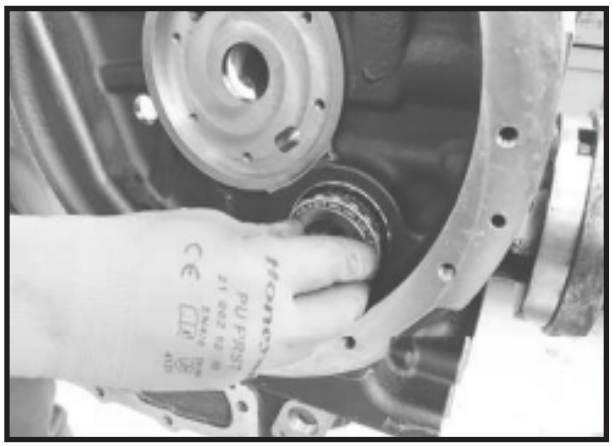

FIGURE 10: Assemble the second bearing cone on the opposite side.

FIGURE 11: Push the bearing cone in related seat, with suitable driver and hammer.

Note: push bearing cone to the end.

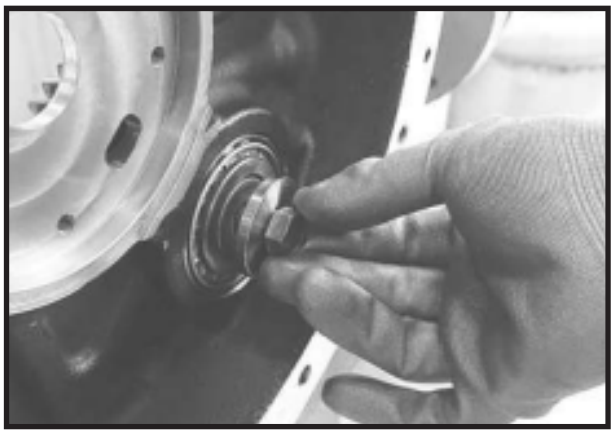

FIGURE 12: Assemble the shown fastening bolt.

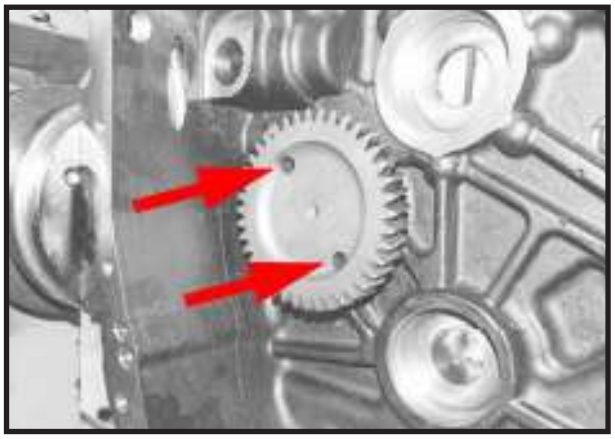

FIGURE 13: Lock idle gear rotation by using the shown holes.

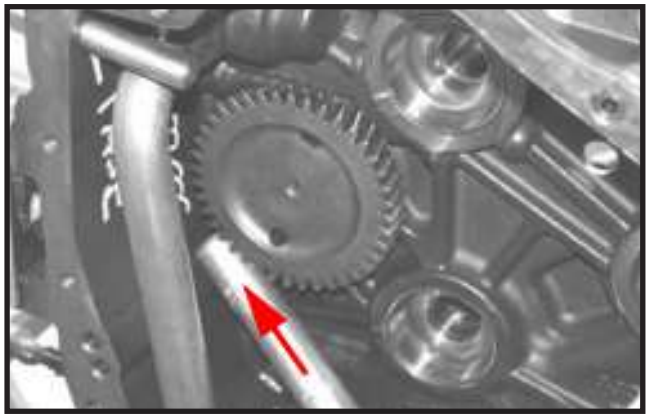

FIGURE 14: Note: it is possible to lock the idle gear using a soft material pad (i.e. aluminum) as shown in the figure.

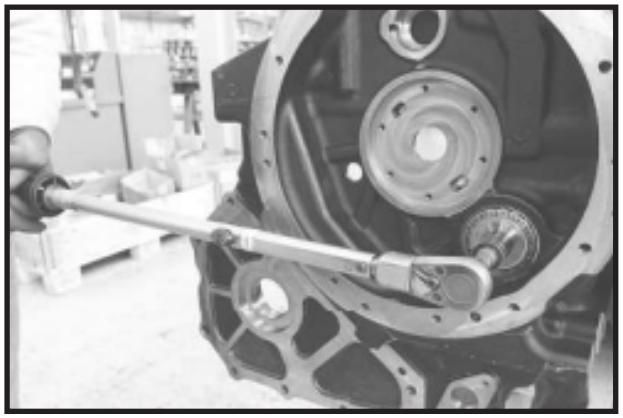

FIGURE 15: Tighten the shown bolt to prescribed torque with dynamometric wrench.

FIGURE 16: Group properly assembled.

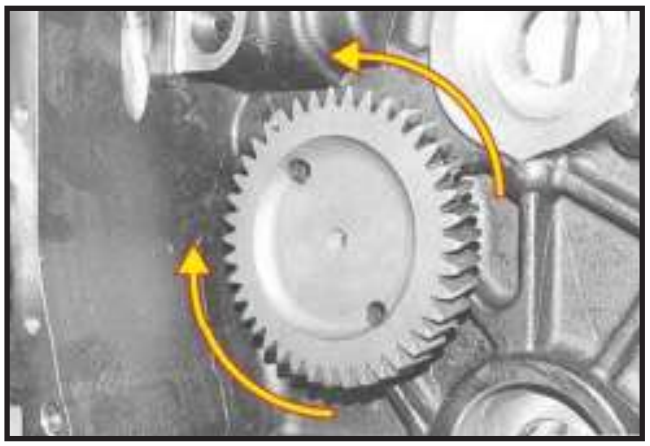

Assembly of Shafts Bearing Cups

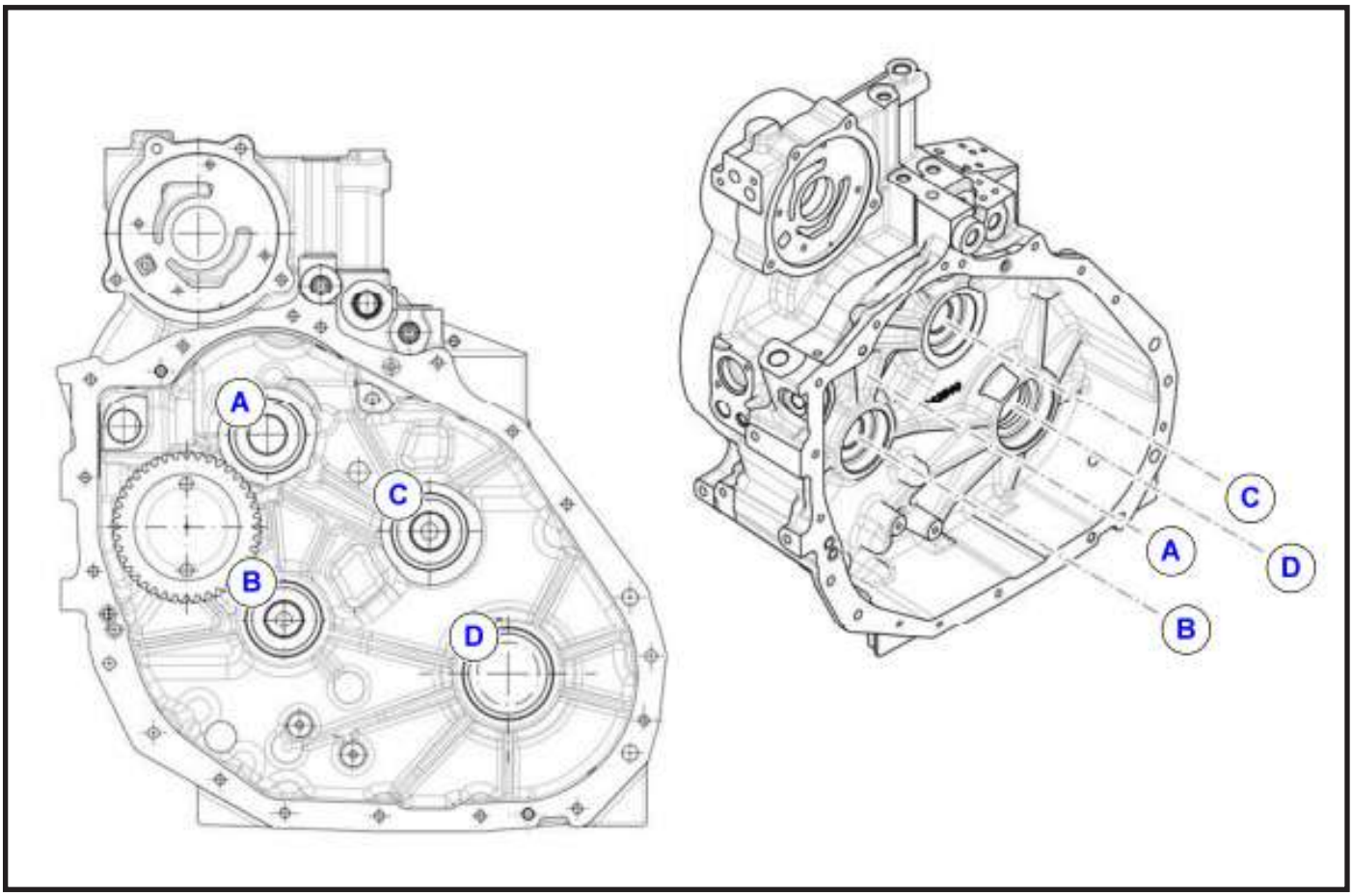

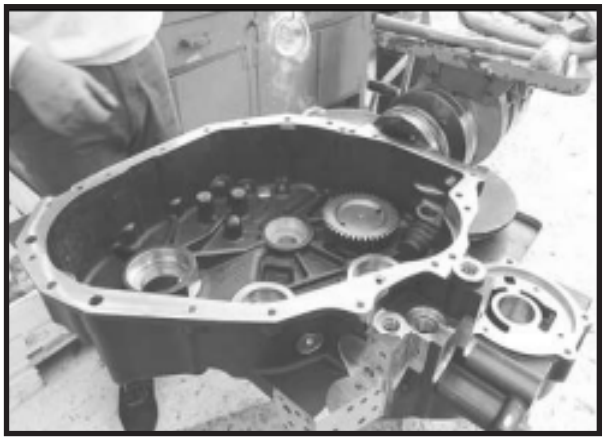

FIGURE 1: DANGER Accidental fall of housing can result in serious injury to the operator; verify that the support is stable, check that the unit is securely fastened to the support.

Clean with care the bearings seats.

FIGURE 2: CAUTION Burn Hazard; wear safety protections required by current safety regulations.

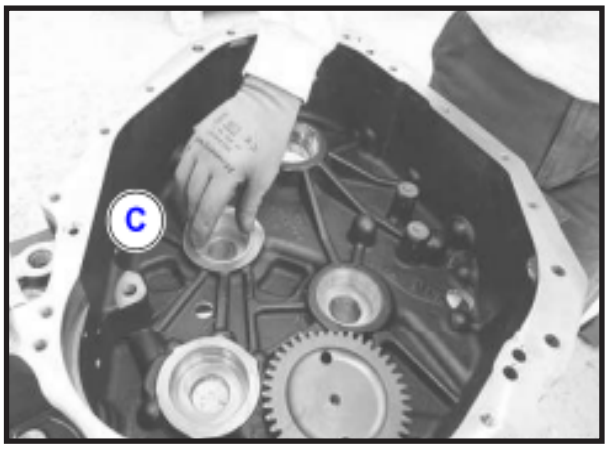

FIGURE 3: Assemble the bearing cup on axis (**C**). Important: orient the cup as shown. Note: it is possible to install the bearing cups without cooling using a press and suitable driver.

FIGURE 4: Push the bearing cup to the end, with suitable driver and hammer.

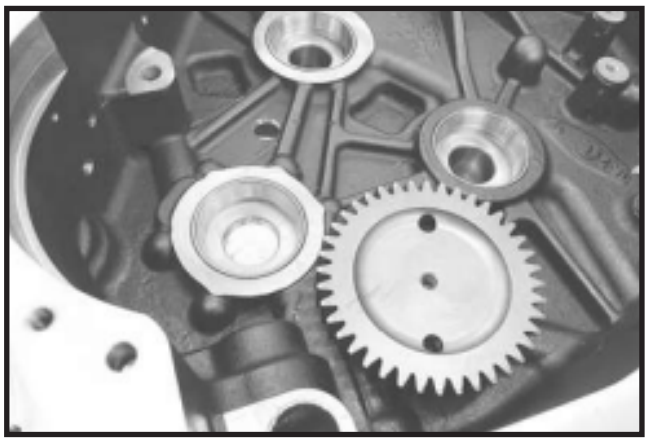

FIGURE 5: Assemble the other bearings cups in the front housing.

Important: orient the cups as shown. **Note**: it is possible to install the bearing cups without cooling using a press and suitable driver.

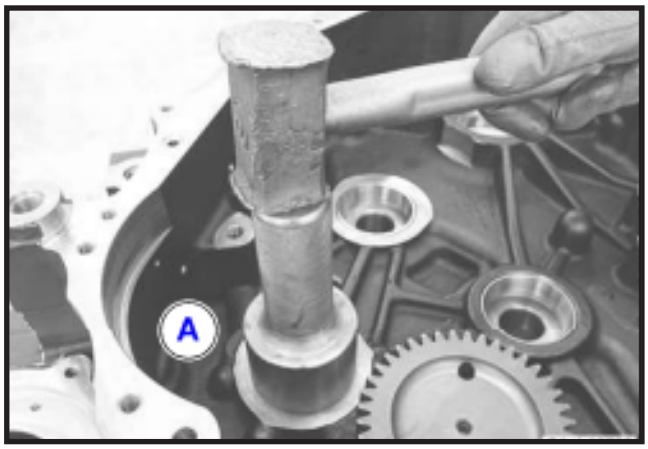

FIGURE 6: Push the bearing cup on axis (**A**) to the end, with suitable driver and hammer.

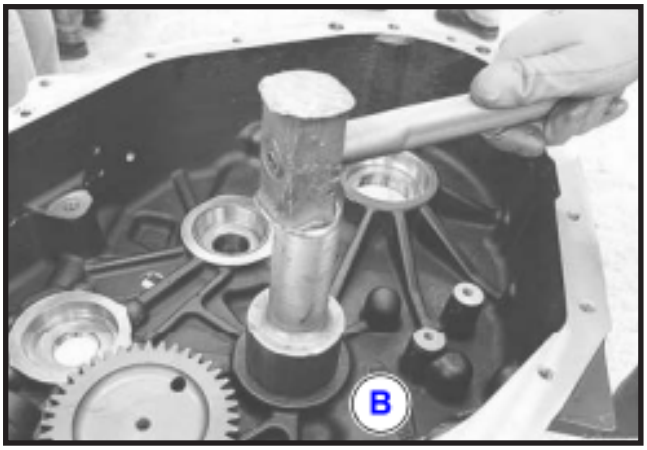

FIGURE 7: Push the bearing cup on axis (**B**) to the end, with suitable driver and hammer.

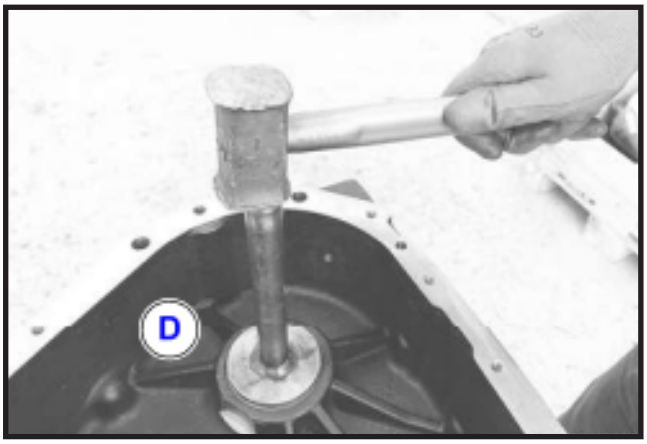

FIGURE 8: Push the bearing cup on axis (**D**) to the end, with suitable driver and hammer.

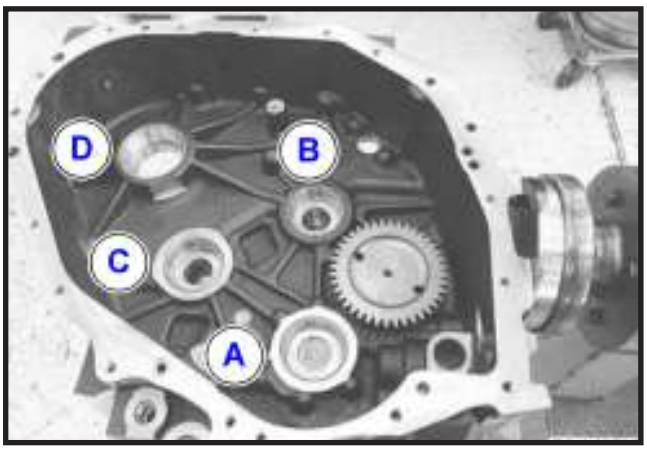

FIGURE 9: Group properly assembled.

Disassembly

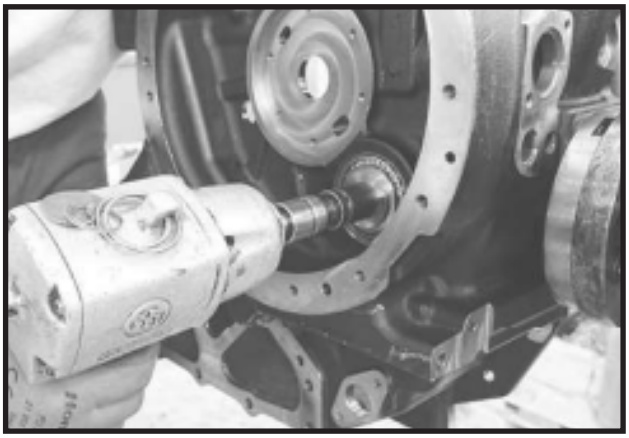

FIGURE 1: Remove shown fastening bolt, if necessary disassemble the unit.

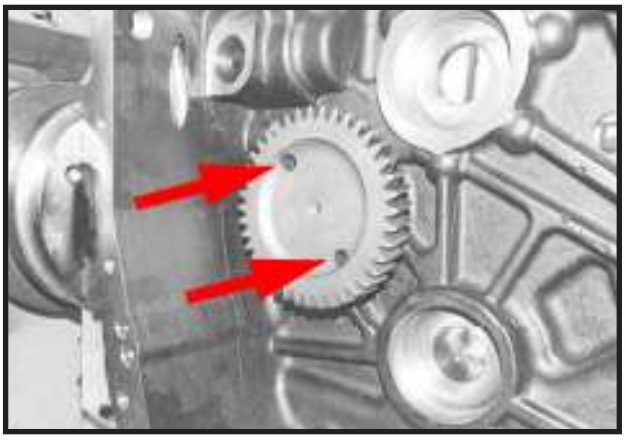

FIGURE 2: Important: Lock gear rotation by using the shown holes.

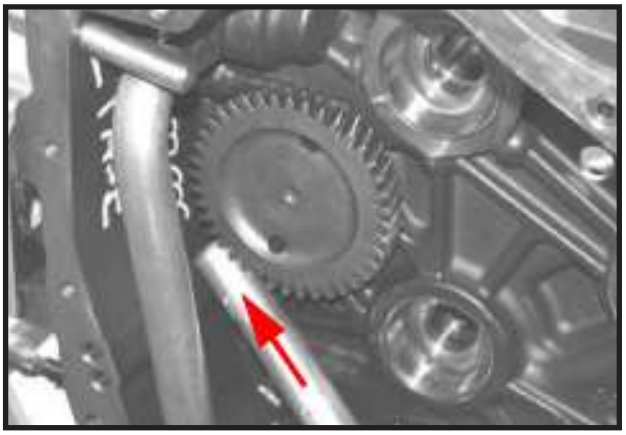

FIGURE 3: Note: it is possible to lock the idle gear using a soft material pad (i.e. aluminum) as shown in the figure.

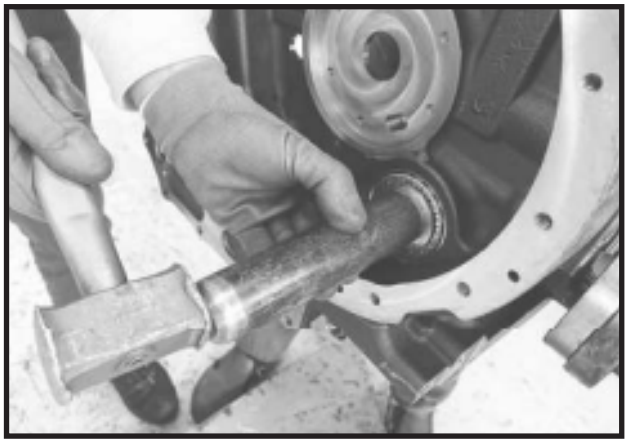

FIGURE 4: Push out the idler gear shaft with suitable driver and hammer. Collect the tapered bearing cone

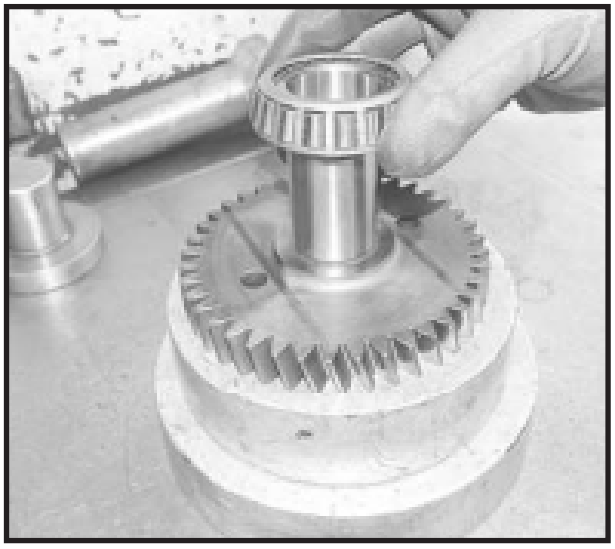

FIGURE 5: If bearing replacement are required, remove the cone from idler gear shaft using an appropriate extractors.

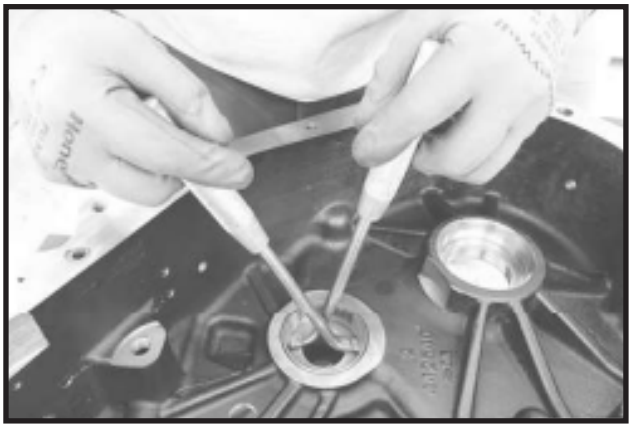

FIGURE 6: If bearings replacement are required, remove the cups from front housing using an appropriate extractors.

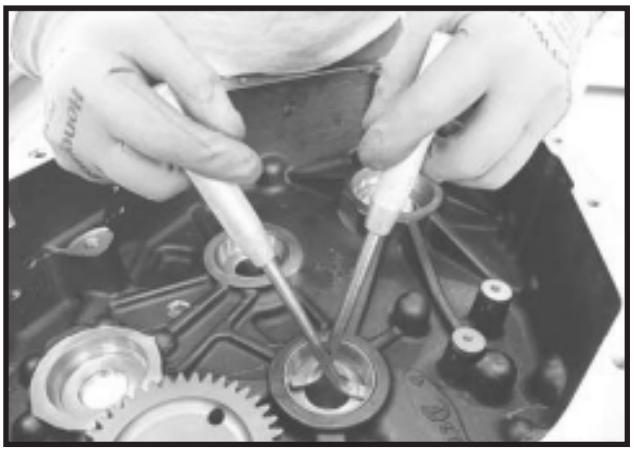

FIGURE 7: Do the same to remove other cups from the front housing. **Note**: remove only the bearing cups that must be replaced.

Transmission Housing Group
Oil Pipe Assembly – Drawing 1

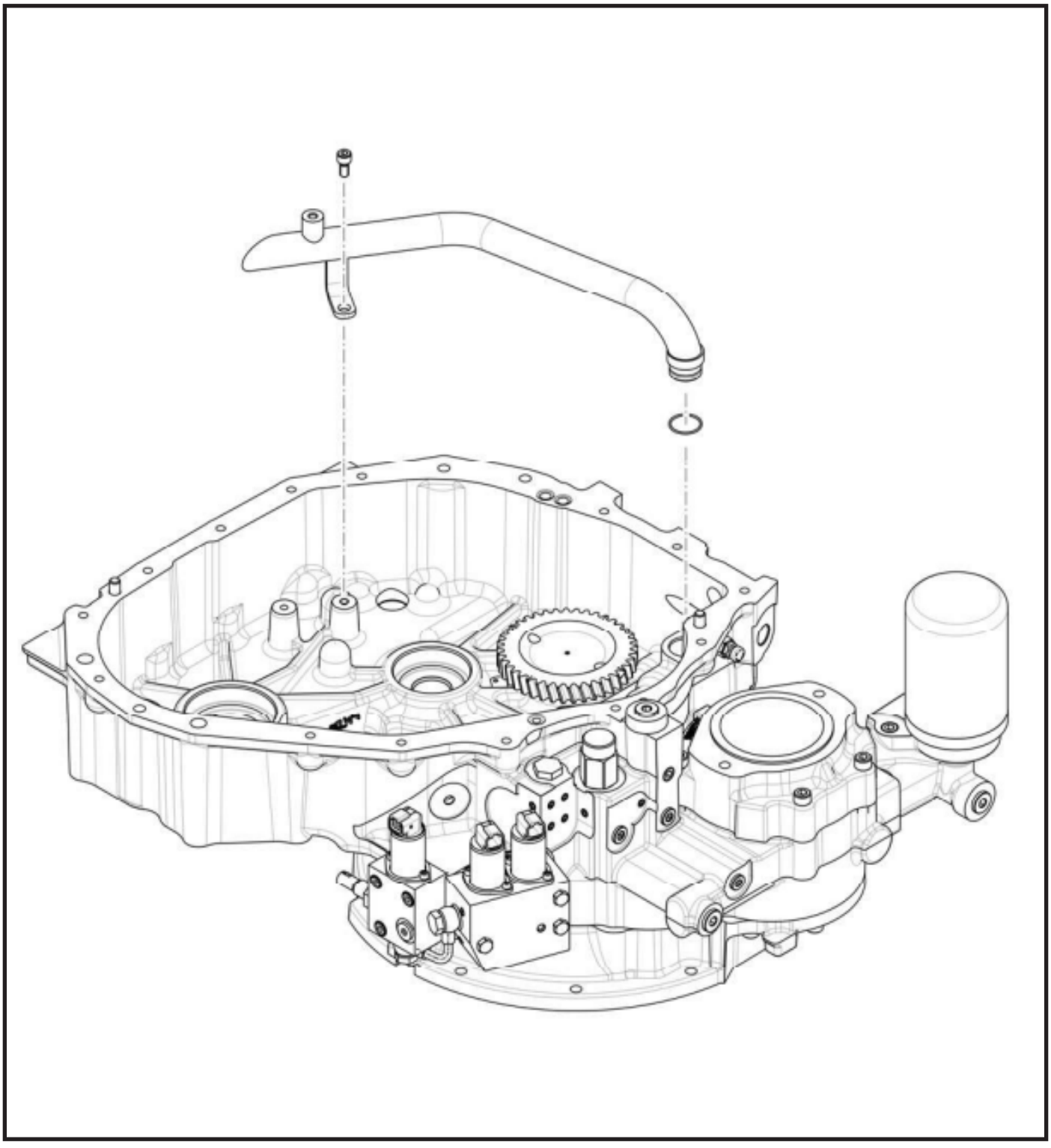

Oil Conveyor Assembly – Drawing 2

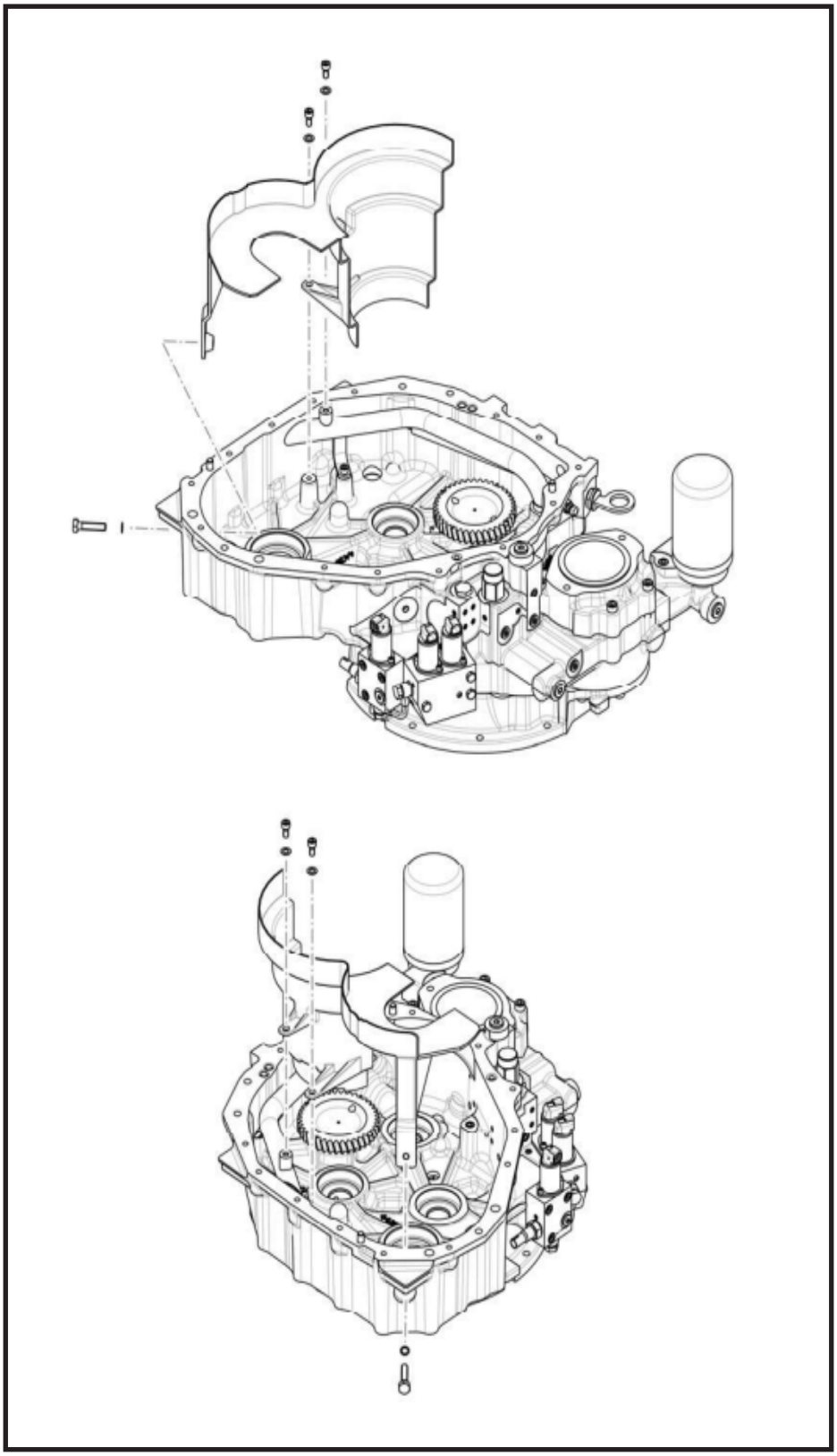

Shafts Assembly – Drawing 3

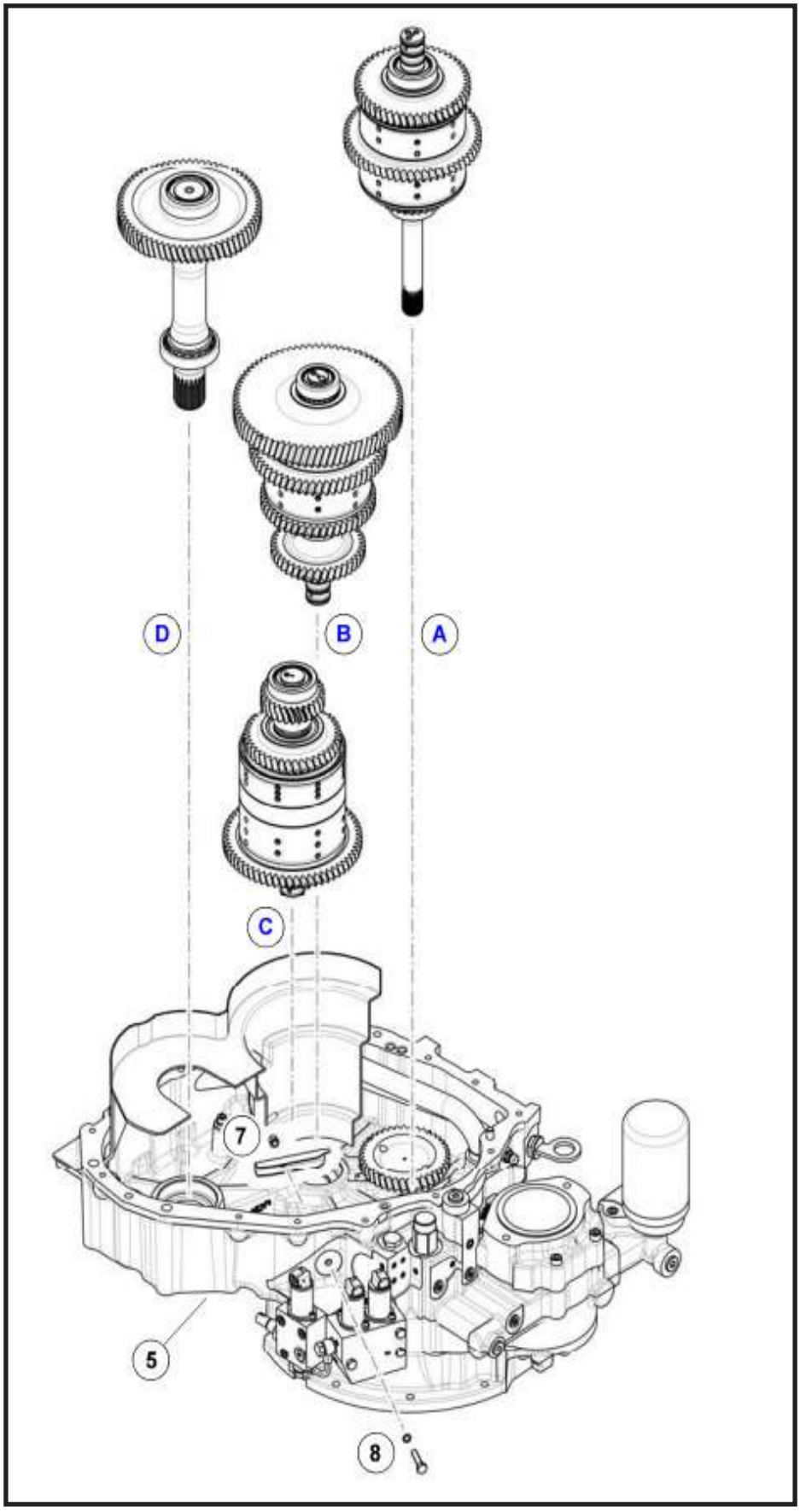

Rear Housing Assembly – Drawing 4

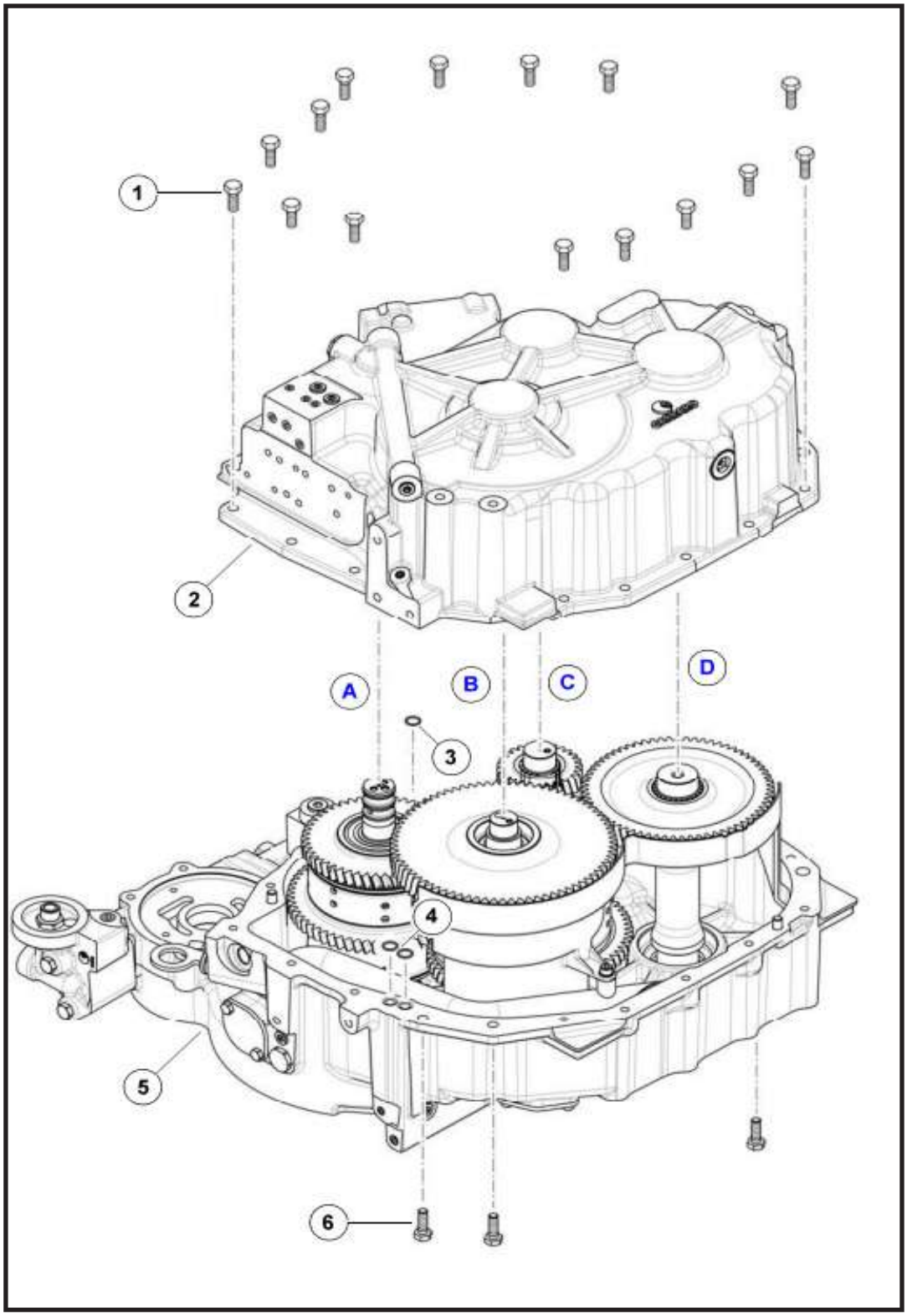

Bracket Assembly – Drawing 5

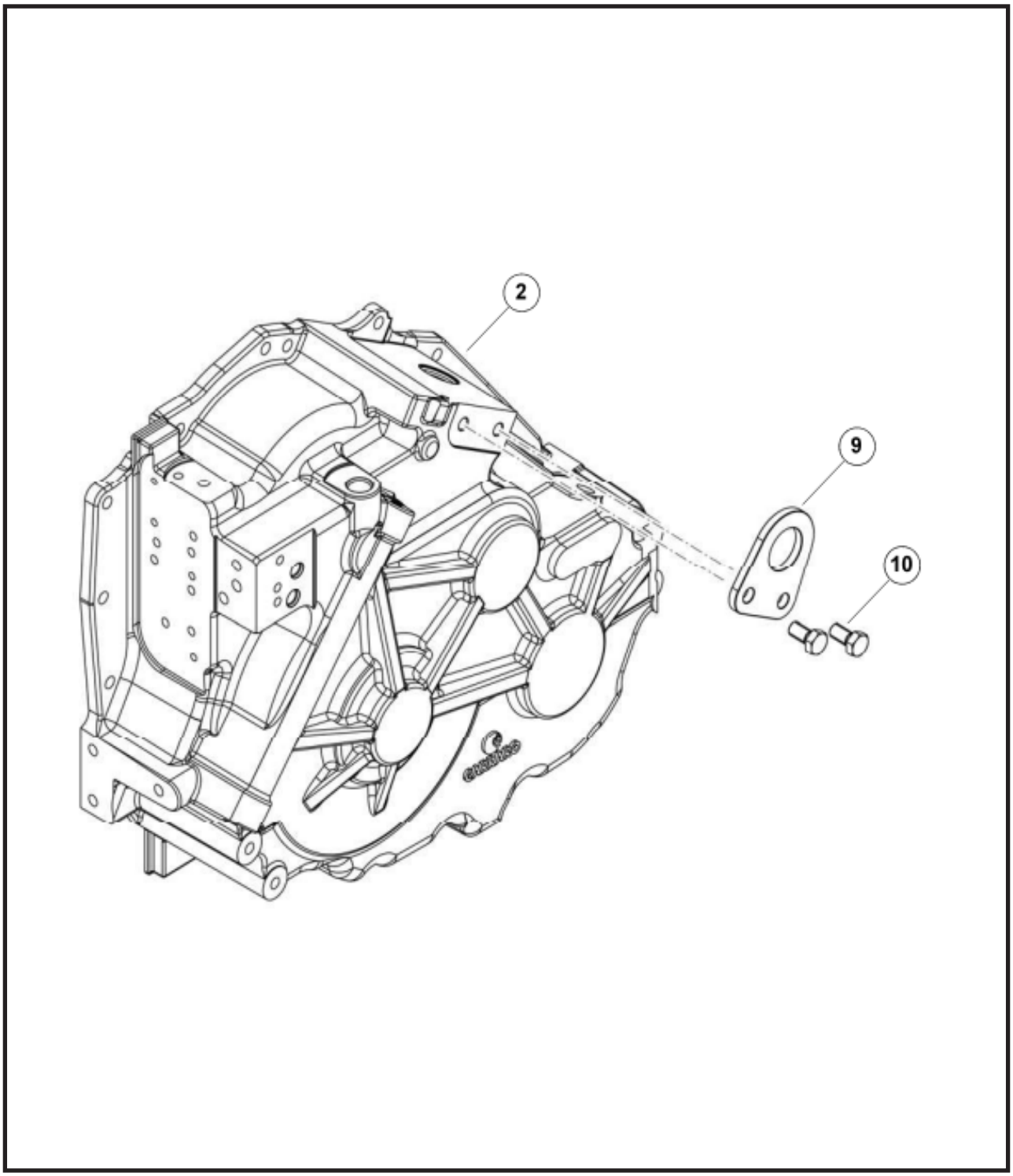

Assembly

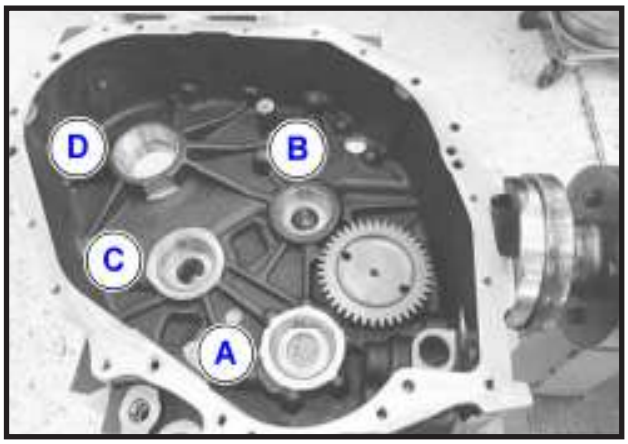

FIGURE 1: Check the correct assembly of the front housing group. **See**: previous section.

Install the transmission on the appropriate special stand. **See**: Special Tools in Product Data.

WARNING

Accidental fall of transmission heavy parts can result in serious injury to the operator; verify that the support is stable and correctly anchored, check that the whole transmission group is securely fastened to the support.

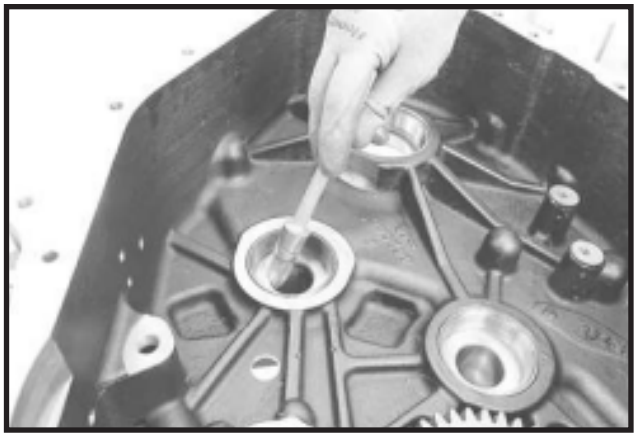

FIGURE 2: Lubricate with care the seats of bearings and seal rings of shafts using clean transmission oil.

FIGURE 3: Lubricate the seal rings of shaft on axis (**C**) using clean transmission oil. **See**: Drawing 3, in the main schemes at the beginning of this section.

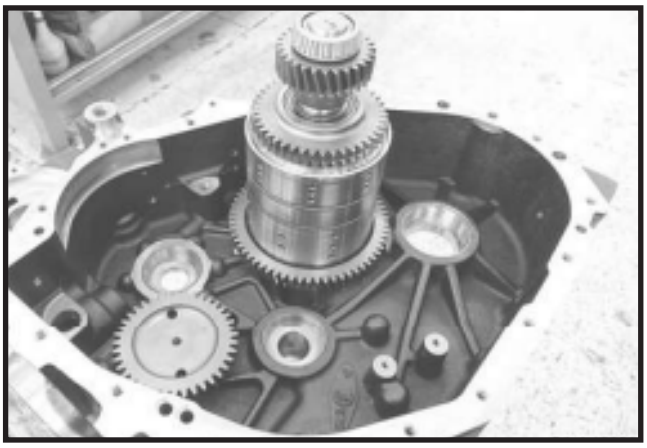

FIGURE 4: Overturn and assemble the shaft on axis (**C**) taking care not to damage the seals.

FIGURE 5: Assemble relative washer on bolt (**8**). **See**: Drawing 3.

FIGURE 6: Place the bracket and nut (**7**) inside the housing (**5**).

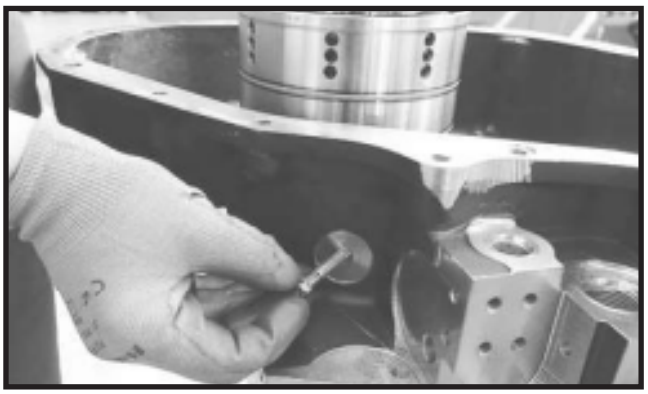

FIGURE 7: Assemble the bolt (**8**) from the outside of housing (**5**) to the bracket and nut (**7**) inside the housing. **See**: previous figure.

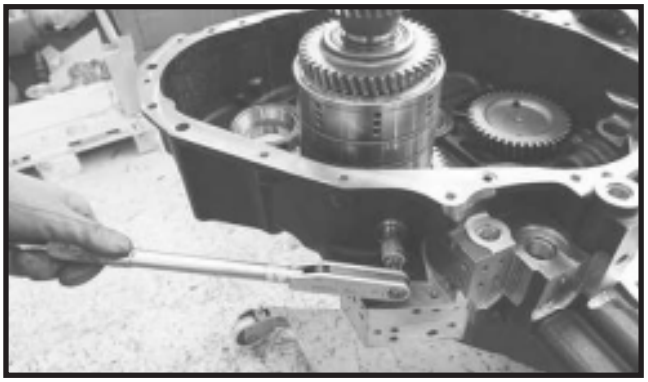

FIGURE 8: Tighten the fastening bolt to prescribed torque with dynamometric wrench.

FIGURE 9: Assemble a new O-Ring on shown oil pipe and lubricate with proper grease.

See: Drawing 1, in the main schemes at the beginning of this section.

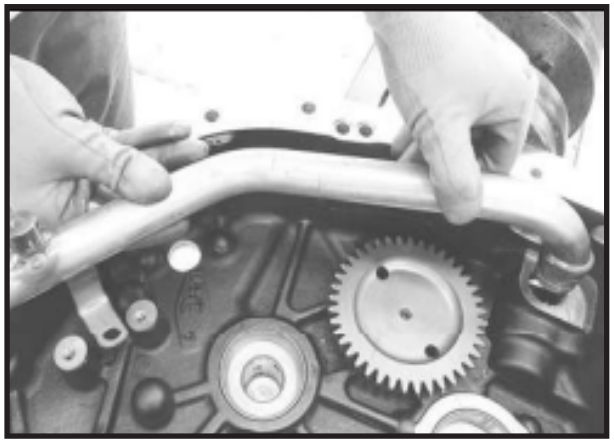

FIGURE 10: Assemble the oil pipe to transmission housing.

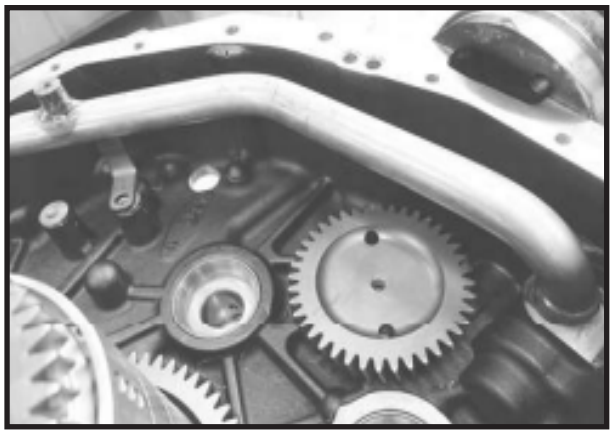

FIGURE 11: Push the oil pipe at the bottom in the shown position.

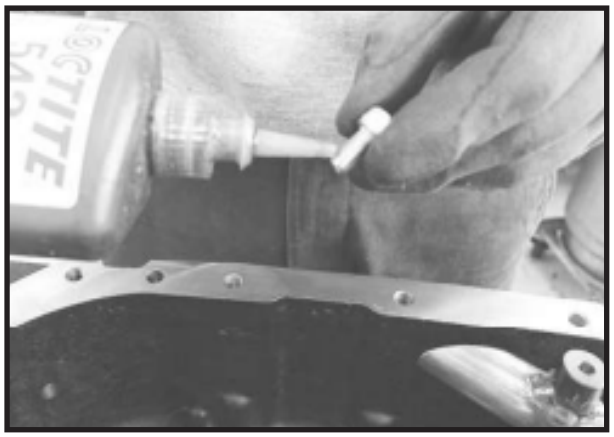

FIGURE 12: Apply the prescribed sealant on the bolt thread.

FIGURE 13: Assemble the fastening bolt to the housing.

FIGURE 14: Tighten the fastening bolt to prescribed torque with dynamometric wrench.

FIGURE 15: Assemble the oil conveyor as shown.

See: Drawing 2.

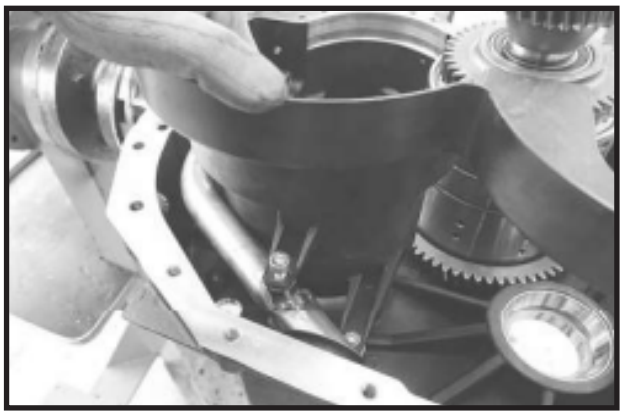

FIGURE 16: Assemble the fastening bolts without tighten.

FIGURE 17: Assemble relative washer on fastening bolt.

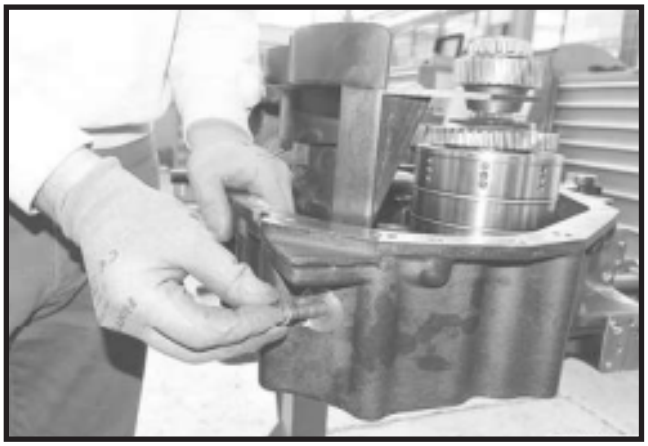

FIGURE 18: Assemble the fastening bolts to conveyor without tighten.

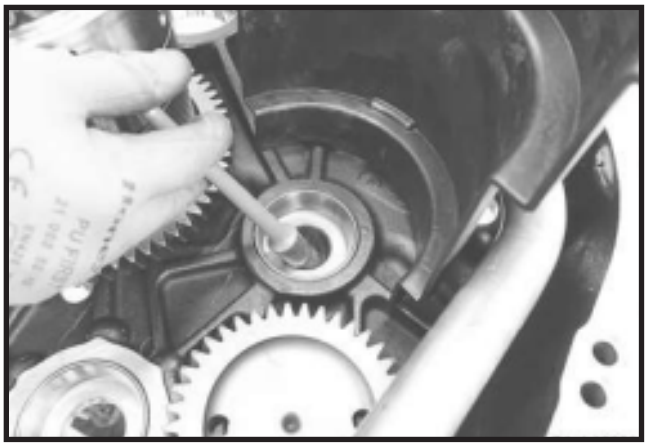

FIGURE 19: Lubricate with care the seats of bearing and seal rings using clean transmission oil.

See: Drawing 3, in the main schemes at the beginning of this section.

FIGURE 20: Overturn and assemble the shaft on axis (A) taking care not to damage relative seal (in (if already assembled in the housing). Note: lubricate shaft end. Check that all gears are correctly coupled.

FIGURE 21: Lubricate the seal rings of shaft on axis (**B**) using clean transmission oil.

See: Drawing 3.

FIGURE 22: Overturn the shaft on axis (**B**) and assemble an eyebolt as shown.

Important: check that the eyebolt is well screwed into the shaft. Hook the eyebolt to a suitable lifting system.

FIGURE 23: Overturn and assemble the shaft on axis (B) taking care not to damage the seals. Check that all gears are correctly coupled.

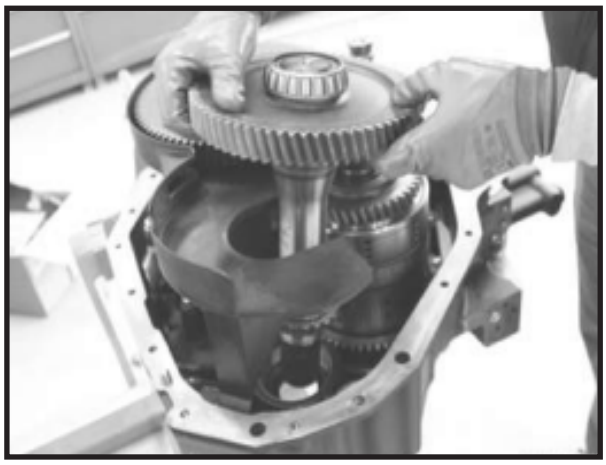

FIGURE 24: Overturn and assemble the shaft on axis (**D**) taking care not to damage relative seal (in (if already assembled in the housing). Note: lubricate shaft end.

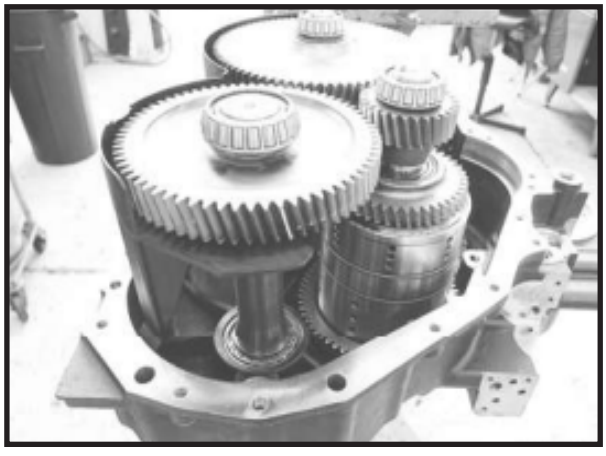

FIGURE 25: Check that all gears are correctly coupled.

FIGURE 26: Note: order of shafts after assembly

FIGURE 27: Note: order of shafts after assembly.

FIGURE 28: Tighten the shown conveyor fastening bolt to prescribed torque with dynamometric wrench.

FIGURE 29: Tighten the shown fastening bolt to prescribed torque with dynamometric wrench.

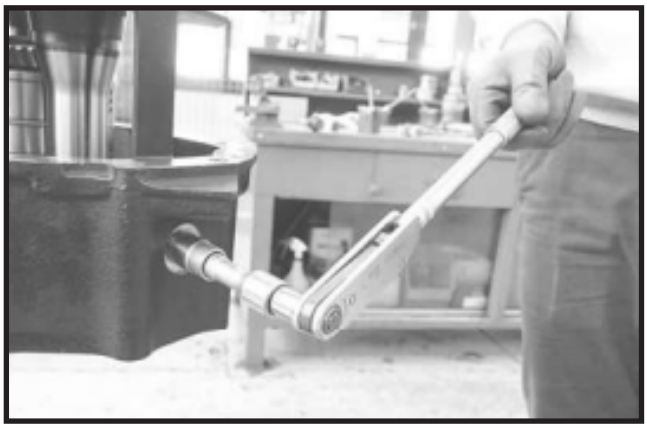

FIGURE 30: Tighten the shown fastening bolt to prescribed torque with dynamometric wrench.

FIGURE 31: Lubricate with care the seats of bearing and seal rings on axis (**A**) using clean transmission oil. **See**: Drawing 3.

FIGURE 32: Lubricate the seal ring of shaft on axis (**A**) using clean transmission oil.

See: Drawing 3.

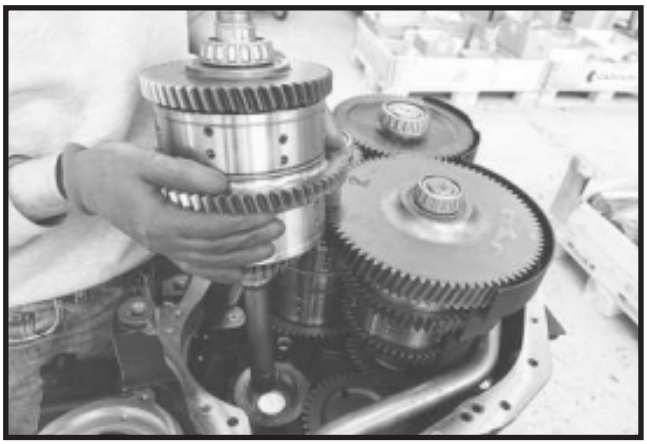

FIGURE 33: Overturn and assemble the shaft on axis (**A**) taking care not to damage the seals. Check that all gears are correctly coupled.

FIGURE 34: Check that all gears are correctly coupled.

FIGURE 35: Lubricate and assemble a new O-Ring (**3**) as shown.

See: Drawing 4.

FIGURE 36: Lubricate and assemble two new O-Rings (4) as shown.

See: Drawing 4

FIGURE 37: Apply the prescribed sealant on the coupling surface of housing.

FIGURE 38: Spread the sealant evenly, with a suitable roller.

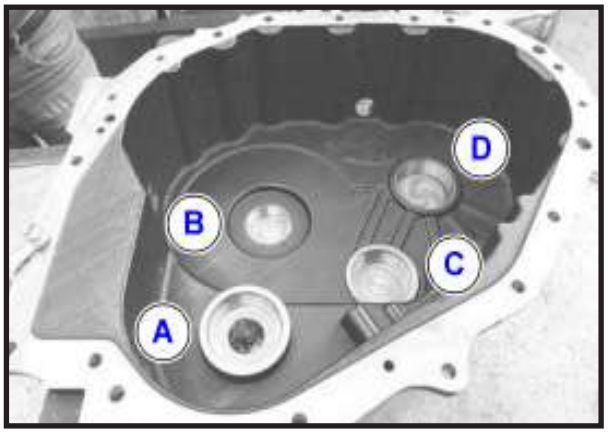

FIGURE 39: Place the rear housing on a work bench. Clean with care the bearings seats and all coupling surfaces.

FIGURE 40: Cool the bearing cups for rear housing in liquid nitrogen.

CAUTION Burn Hazard; wear safety protections required by current safety regulations.

FIGURE 41: Assemble the bearing cups in rear housing.

Important: orient the cups as shown.

Note: it is possible to install the bearing cups without cooling using a press and suitable driver.

FIGURE 42: Push the bearing cup on axis (**A**) to the end, with suitable driver and hammer.

FIGURE 43: Push the bearing cup on axis (**B**) to the end, with suitable driver and hammer.

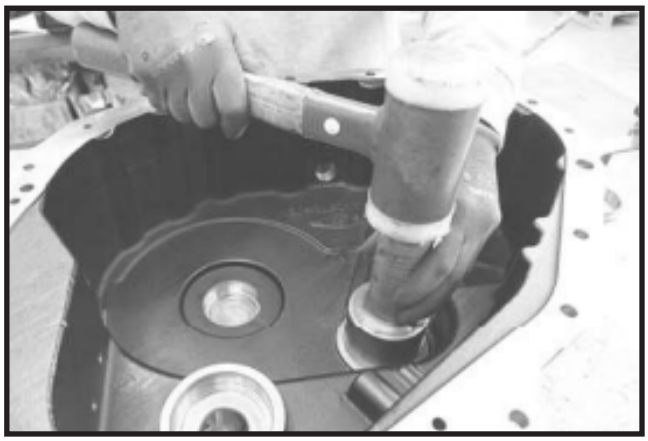

FIGURE 44: Push the bearing cup on axis (**C**) to the end, with suitable driver and hammer.

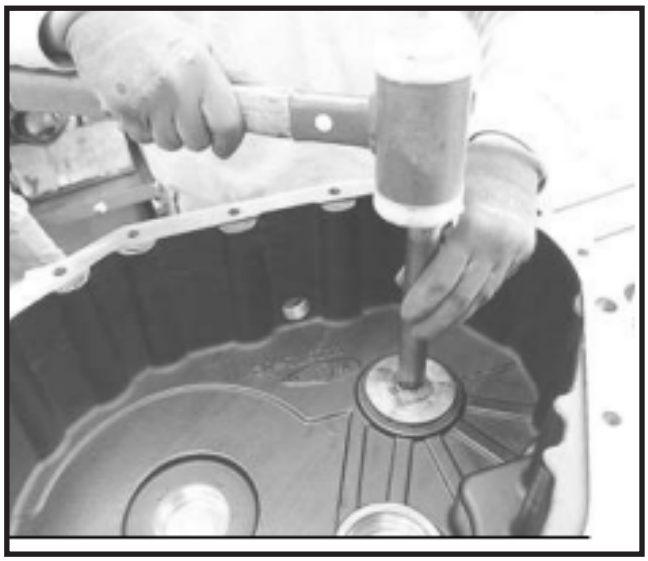

FIGURE 45: Push the bearing cup on axis (**D**) to the end, with suitable driver and hammer.

FIGURE 46: Move the transmission rear housing with suitable lifting system and the appropriate support bracket specified.

See: Special Tools in Product Data.

Important: the fixing bolts of the support bracket must be replaced with new bolts after each use (one lifting of the housing).

WARNING

Accidental fall of transmission housing can result in serious injury to the operator; verify that the unit is securely fastened.

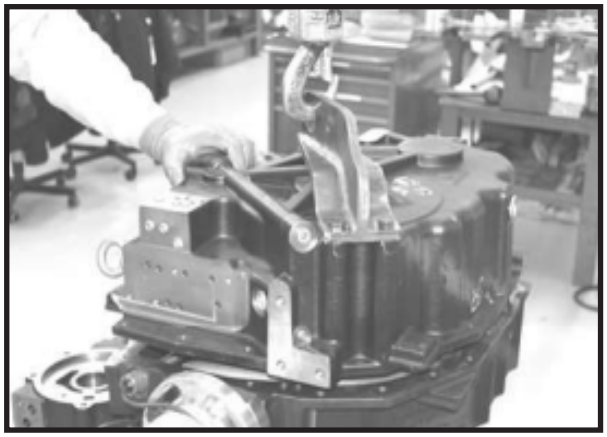

FIGURE 47: Place horizontally the front housing and shafts assembly, then place the rear housing on front housing by keeping it horizontal (use a spirit level).

Note: carefully insert the rear housing on the shafts, so as not to damage the seal rings.

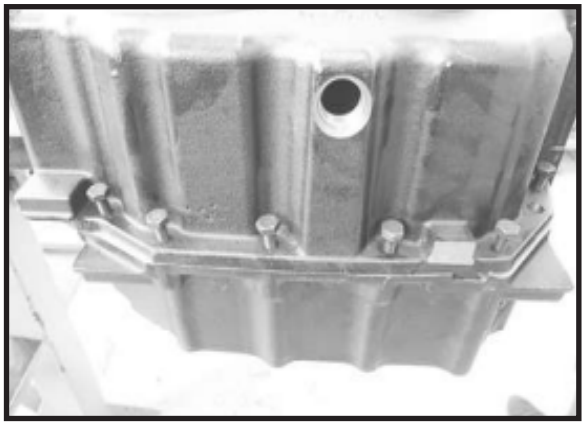

FIGURE 48: Assemble the rear fastening bolts. **See**: Drawing 4, in the main schemes at the beginning of this section. When the back housing is secured to the front housing, remove the lifting equipment.

FIGURE 49: Tighten the rear fastening bolts to prescribed torque with dynamometric wrench.

Remove excess of sealant in the bonding area of the housings.

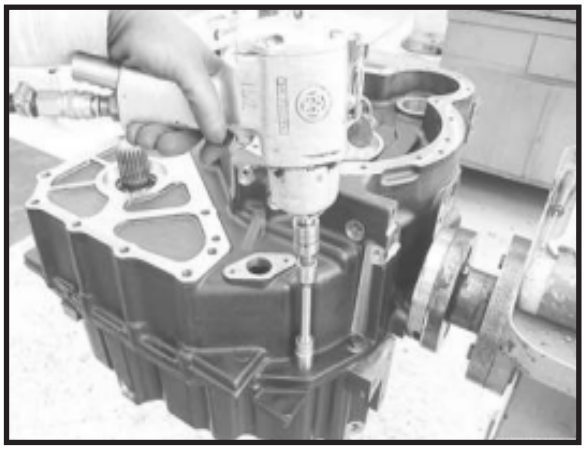

FIGURE 50: Overturn the unit by using the special support. Assemble the front fastening bolts.

See: Drawing 4, in the main schemes at the beginning of this section.

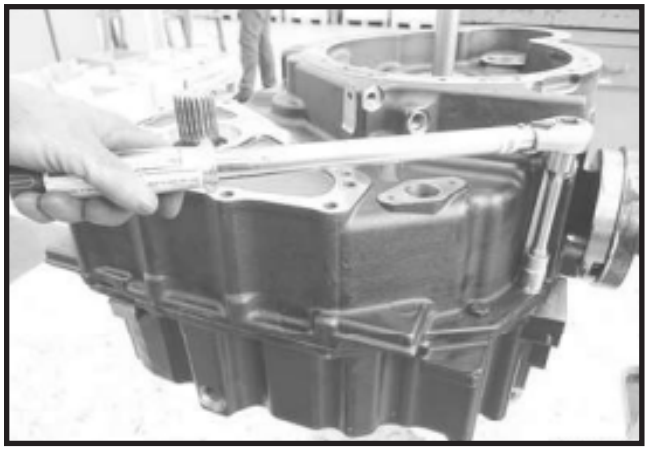

FIGURE 51: Tighten the fastening bolts to prescribed torque.

Remove excess of sealant in the bonding area of the housings.

FIGURE 52: Lubricate a new seal ring with prescribed grease.

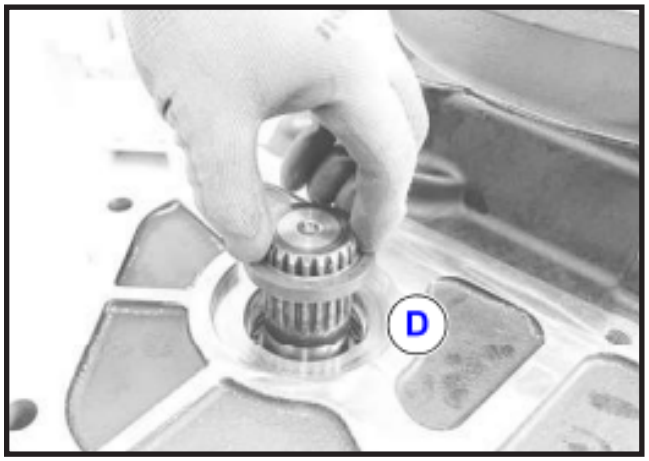

FIGURE 53: Place the new seal ring in shown position.

FIGURE 54: Assemble the seal ring using a proper driver and hammer.

See: Special Tools in Product Data.

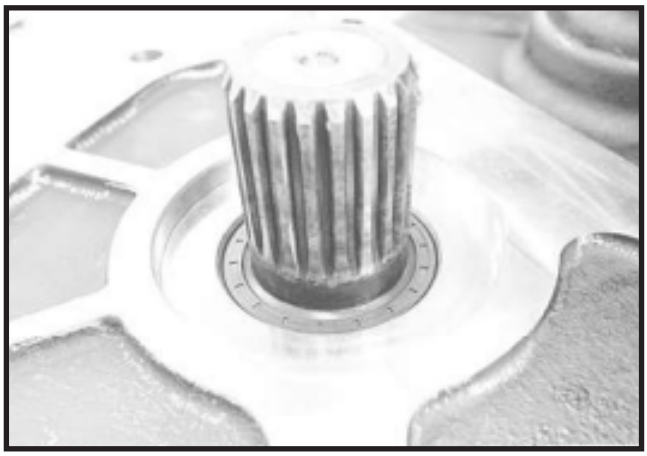

FIGURE 55: Seal ring properly assembled.

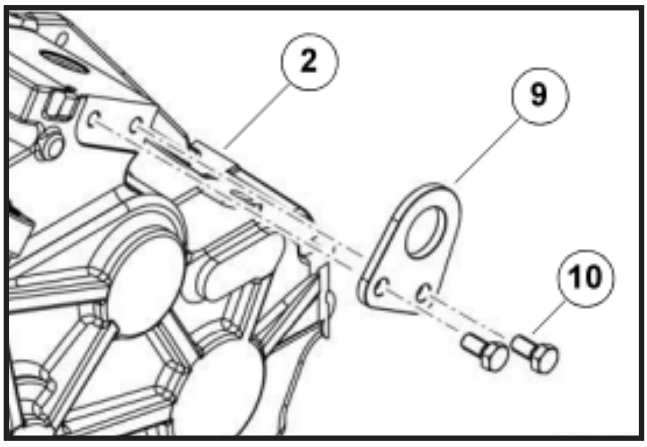

FIGURE 56: Assemble the shown bracket (**9**) with relative fixing bolts (**10**).

See: Drawing 5. Tighten the fixing bolts to prescribed torque.

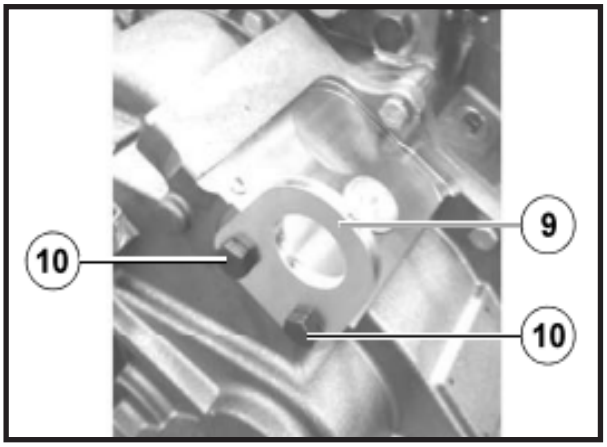

FIGURE 57: Tighten the fixing bolts to prescribed torque.

Disassembly

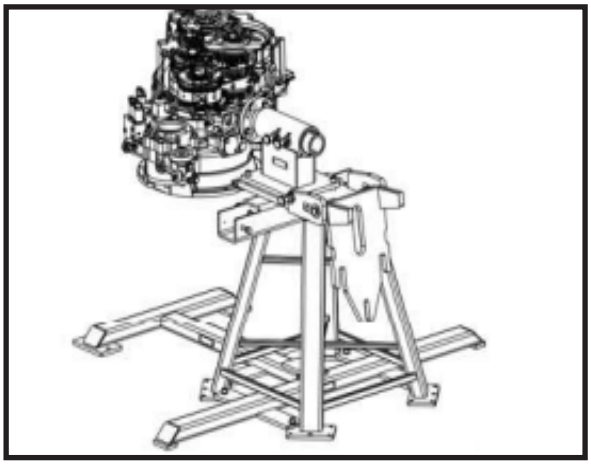

FIGURE 1: Drain oil from transmission.

Install the transmission on the appropriate special stand.

WARNING

Accidental fall of transmission heavy parts can result in serious injury to the operator; verify that the support is stable and correctly anchored, check that the whole transmission group is securely fastened to the support.

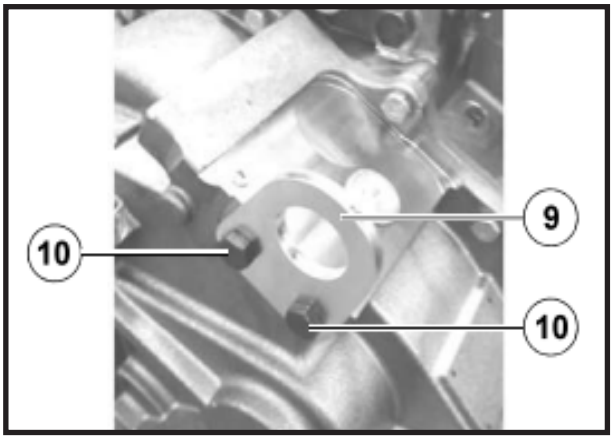

FIGURE 2: Unscrew the fixing bolts (**10**) to remove the shown bracket (**9**).

See: Drawing 5.

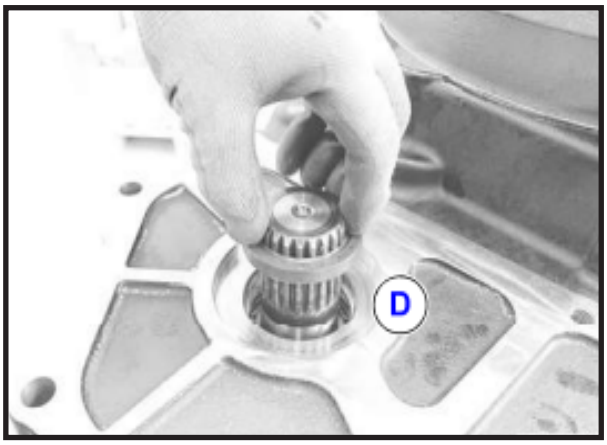

FIGURE 3: Remove the seal ring. **Note**: destructive operation for the seal ring; the seal ring must be replaced. Remove only the parts that need replacement or overhauling. For correct removal of seals and bearings is recommended to follow the instructions in section Special recommendations.

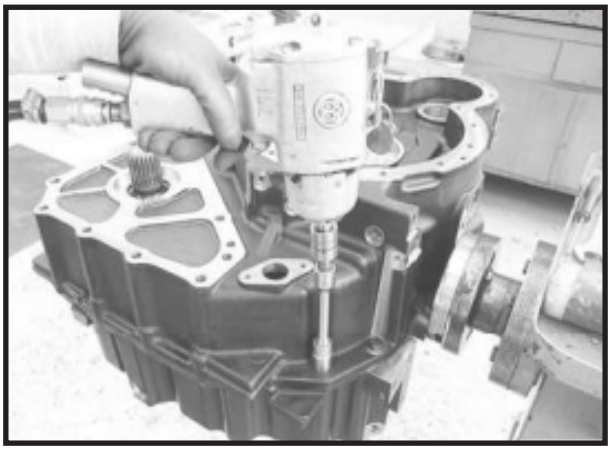

FIGURE 4: Remove the front fastening bolts.

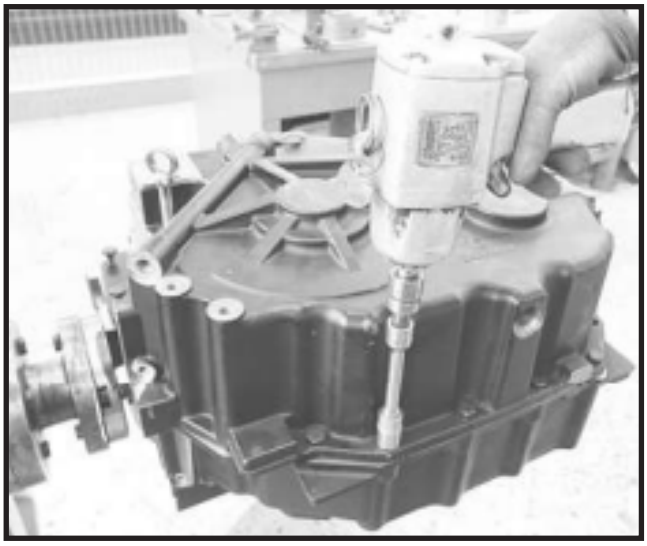

FIGURE 5: Overturn the unit by using the special support. Remove the rear fastening bolts.

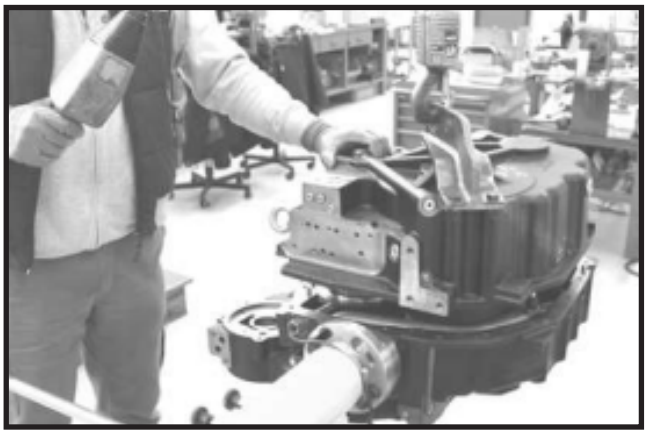

FIGURE 6: Hook the transmission rear housing with suitable lifting system and the appropriate support bracket specified.

See: Special Tools in Product Data.

Important: the fixing bolts of the support bracket must be replaced with new bolts after each use (one lifting of the housing).

WARNING

Accidental fall of transmission housing can result in serious injury to the operator; verify that the unit is securely fastened.

FIGURE 7: Lift the housing and place it on a work bench. Remove the lifting equipment.

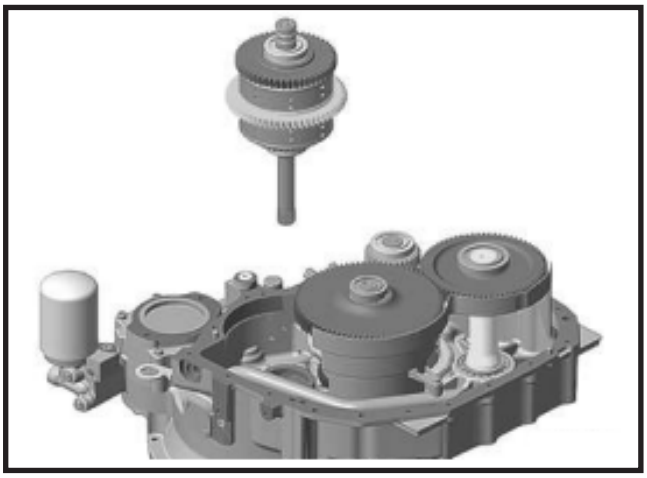

FIGURE 8: Remove the shaft on axis (**A**) taking care not to damage the seals.

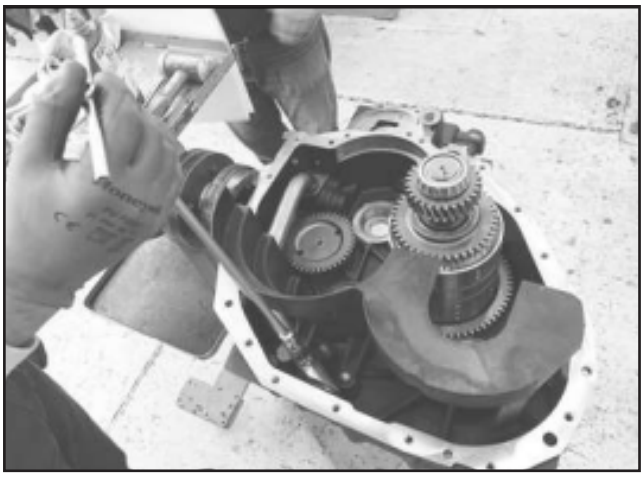

FIGURE 9: Loosen the fastening bolts of oil conveyor before removing the shafts. **See**: Drawing 2.

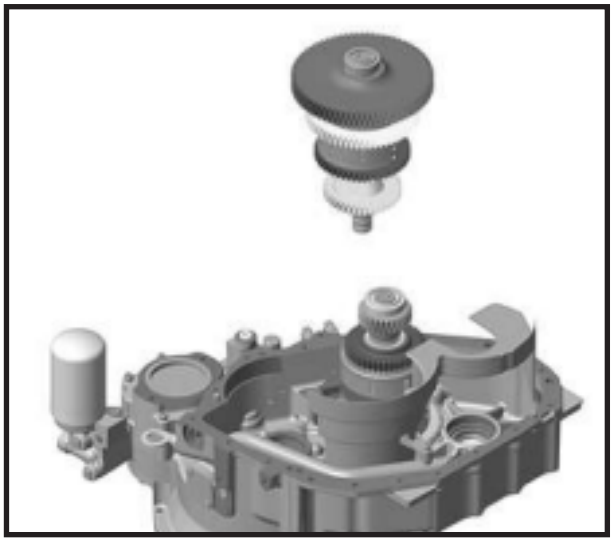

FIGURE 11: Remove the shaft on axis (**B**) taking care not to damage the seals.

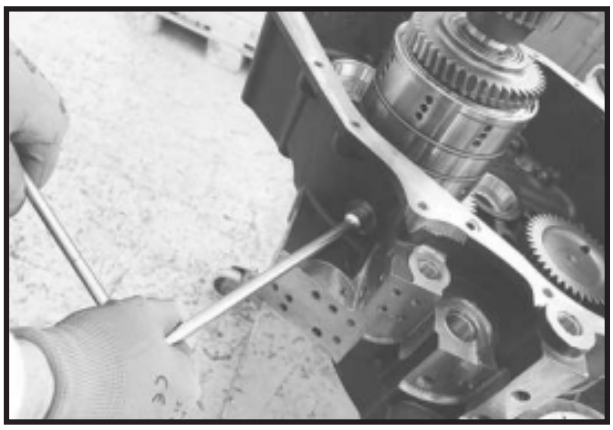

FIGURE 12: Remove the bolt (**8**) from the outside of housing (**5**) to the bracket and nut (**7**) inside the housing.

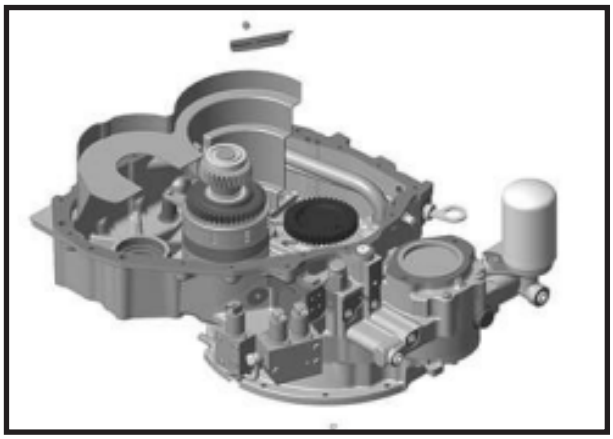

FIGURE 13: Collect the bracket and nut (**7**) inside the housing.

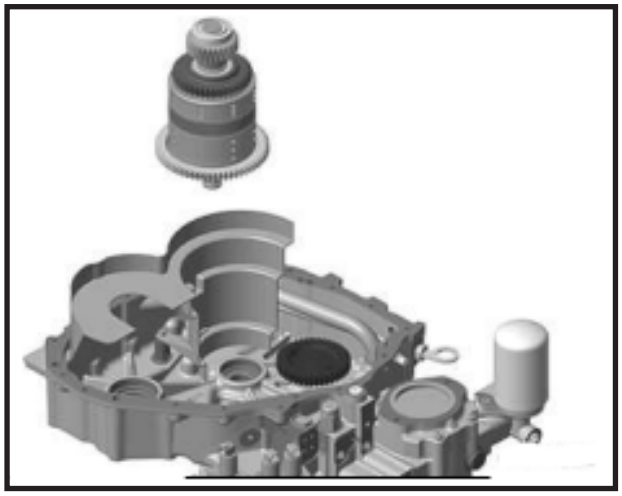

FIGURE 14: Remove the shaft on axis (**C**) taking care not to damage the seals.

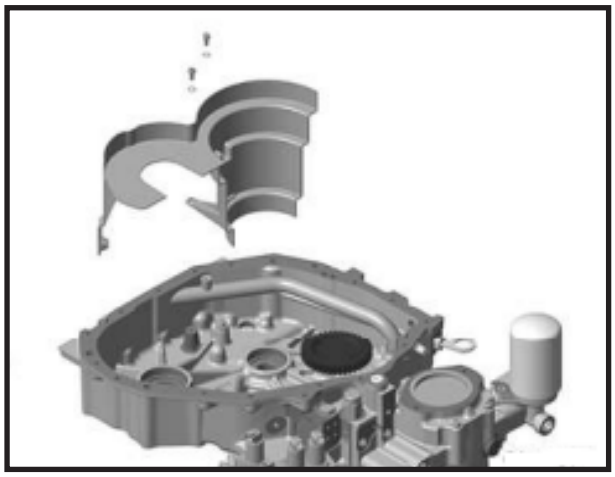

FIGURE 15: Remove the fastening screw of oil conveyor.

See: Drawing 2. Remove the oil conveyor

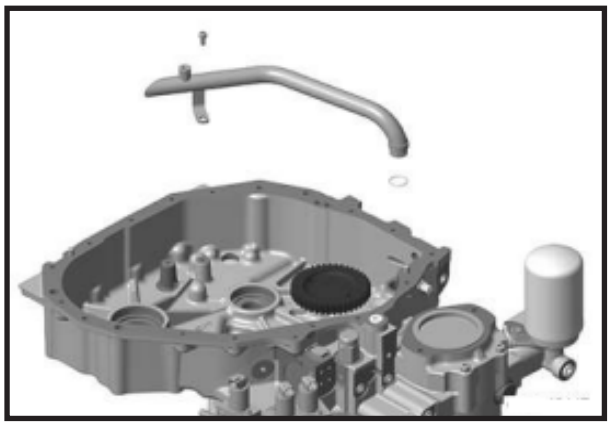

FIGURE 16: Remove the pipe fastening bolt from the housing. Remove the oil pipe from transmission housing. Remove the O-Ring if replacement is required. Note: destructive operation for the O-Ring; the O-Ring must be replaced.

Shafts Group
Output Shaft – Axis D

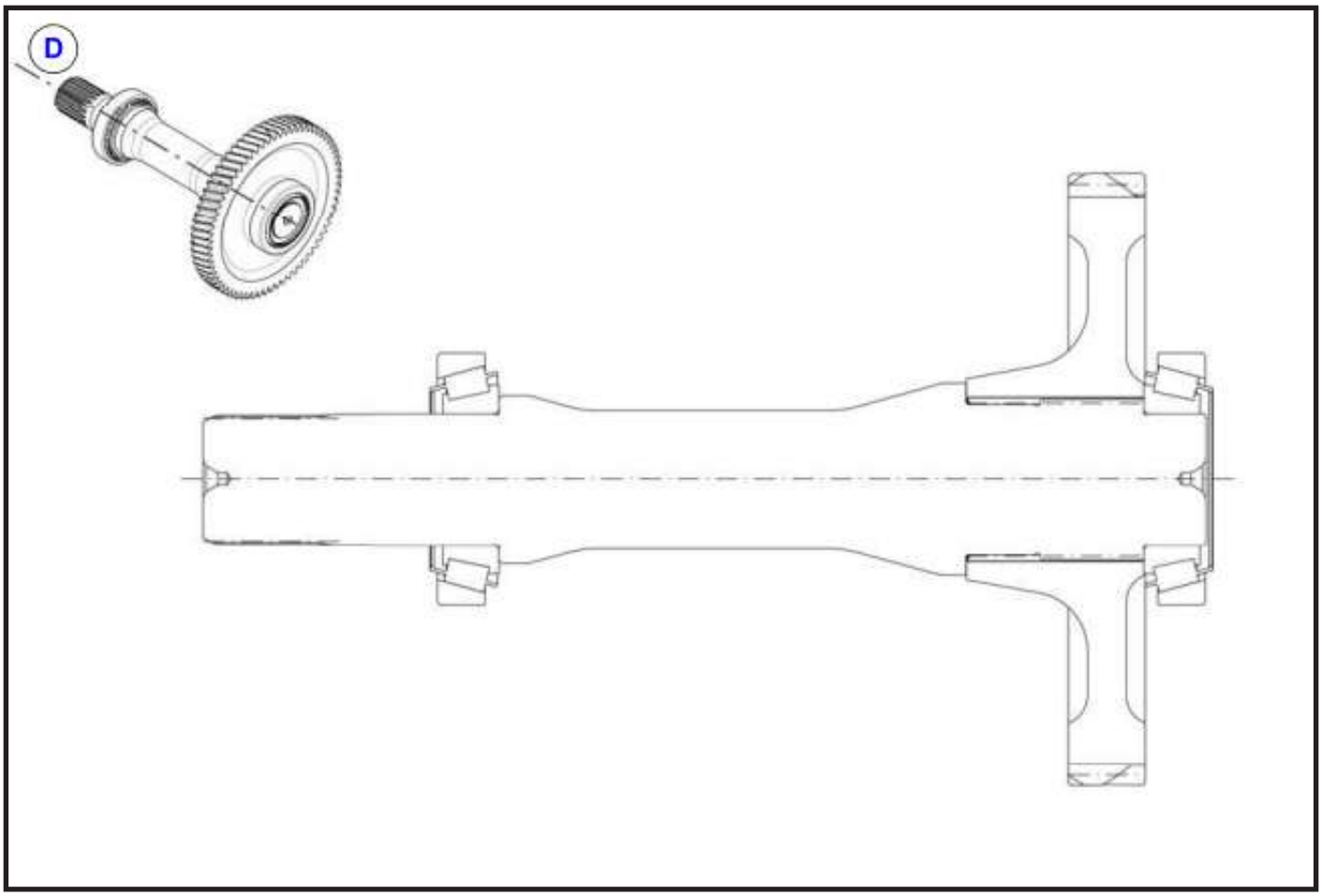

FIGURE 1: Lock the shaft in a wise Note: use proper clamps to avoid damaging it.

FIGURE 2: Assemble the gear as shown.

FIGURE 3: Force the gear in its seat using a suitable pad and hammer.

FIGURE 4: Heat the shown bearing cones at 212°F (100°C).

¡	**CAUTION**

Burn Hazard; wear safety protections required by current safety regulations.

FIGURE 5: Place the tapered bearing cone on gear. See: orient the bearings as shown.

FIGURE 6: Force the bearing into its seat by using a suitable driver and hammer.

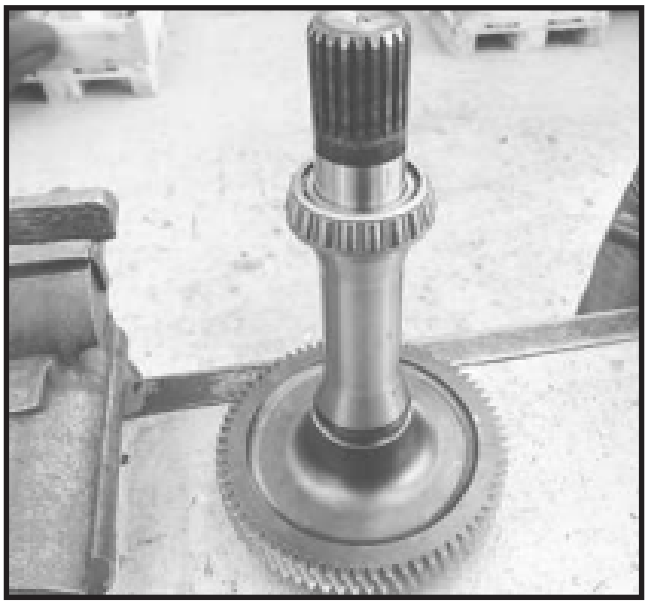

FIGURE 7: Place the tapered bearing cone on gear. See: orient the bearings as shown.

FIGURE 8: Force the bearing into its seat by using a suitable driver and hammer.

Clutch Shaft (K1-K2) – Axis C

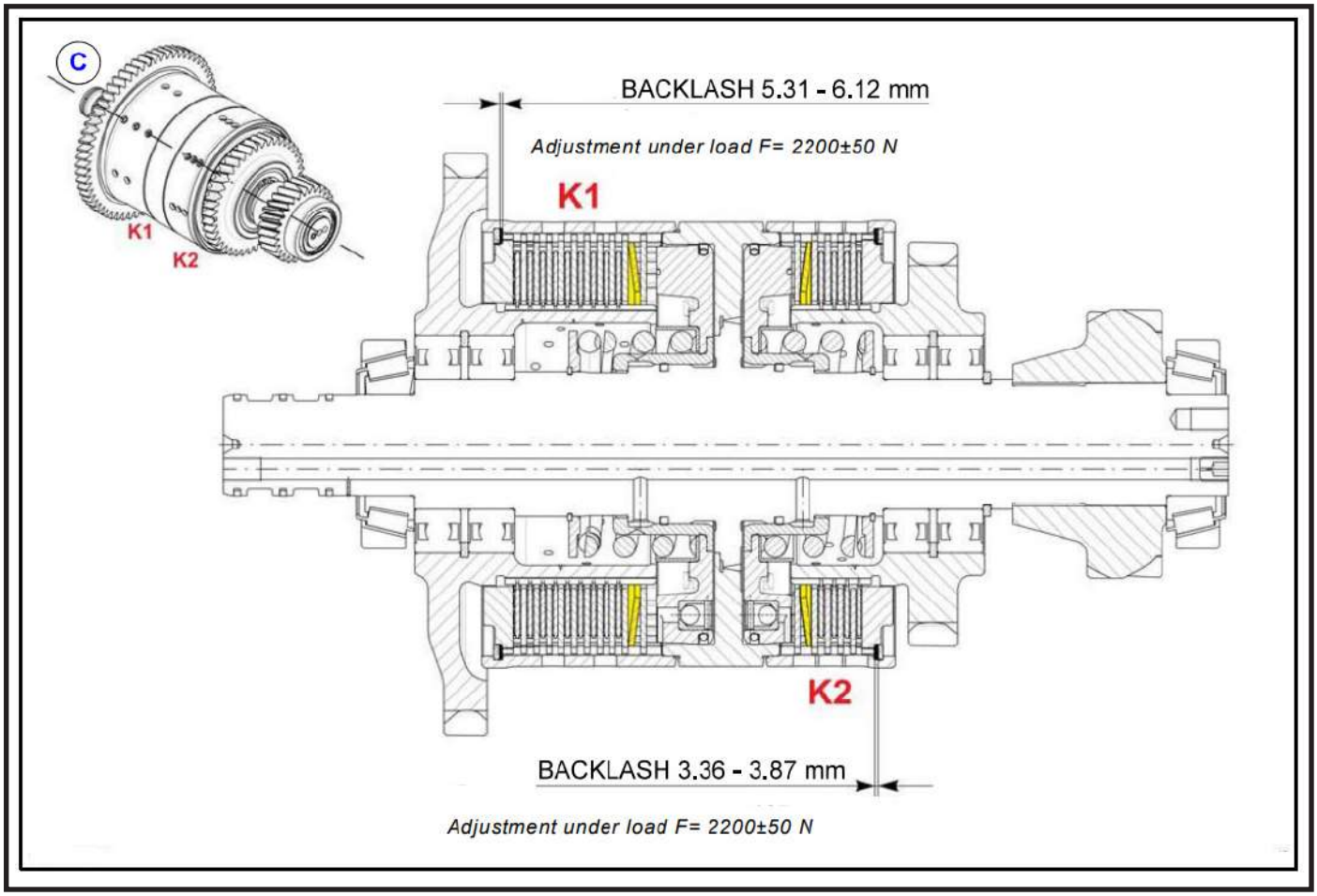

AVAILABLE SNAP RINGS RANGE for clutch K1								
Thickness (in/mm) 0,071 in 1,80 mm	0,079 in 2,00 mm	0,085 in 2,15 mm	0,091 in 2,30 mm	0,096 in 2,45 mm	0,102 in 2,60 mm	0,108 in 2,75 mm	0,114 in 2,90 mm	0,118 in 3,00 mm
Quantity	As required							

AVAILABLE SNAP RINGS RANGE for clutch K2										
Thickness (in/mm)	0,063 in 1,60 mm	0,067 in 1,70 mm	0,071 in 1,80 mm	0,079 in 2,00 mm	0,085 in 2,15 mm	0,091 in 2,30 mm	0,097 in 2,45 mm	0,102 in 2,60 mm	0,108 in 2,75 mm	0,114 in 2,90 mm	0,118 in 3,00 mm
Quantity	As required										

FIGURE 1: Lock the shaft in a wise.

Note: use proper clamps to avoid damaging it. Assemble a new Quad-Ring as shown.

WARNING

Verify that the Quad-Ring is not twisted during installation.

FIGURE 2: Overturn the shaft.

Assemble a new Quad-Ring on the other side.

See: main shaft drawing.

Important: verify that the Quad-Ring is not twisted during installation.

FIGURE 3: Place on the workbench the clutch pistons.

Note: in the pistons there are ball valves for draining the oil.

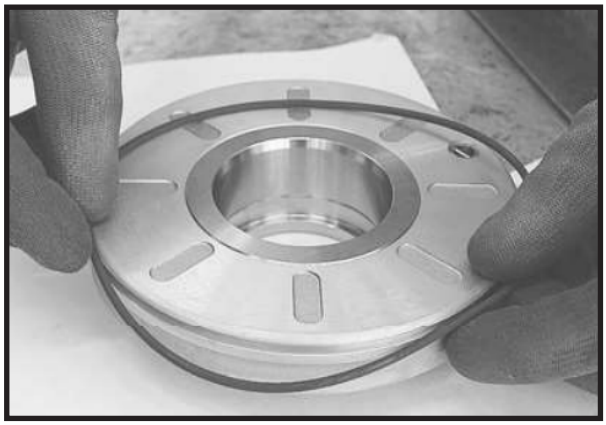

FIGURE 4: Assemble a new O-ring as shown.

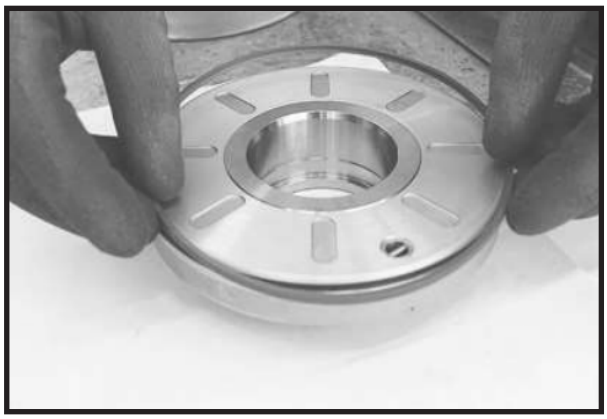

FIGURE 5: Fit a new anti-extrusion ring on the O-Ring.

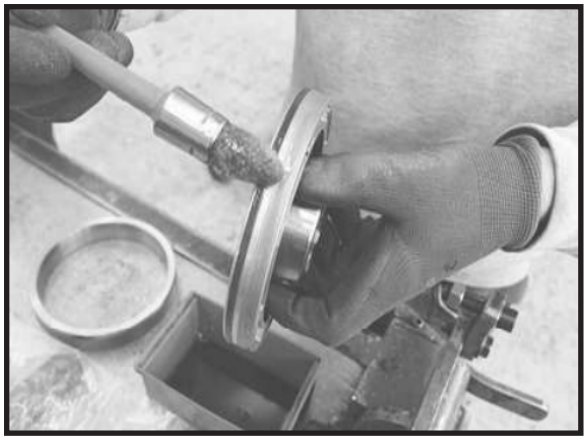

FIGURE 6: Lubricate the seal ring.

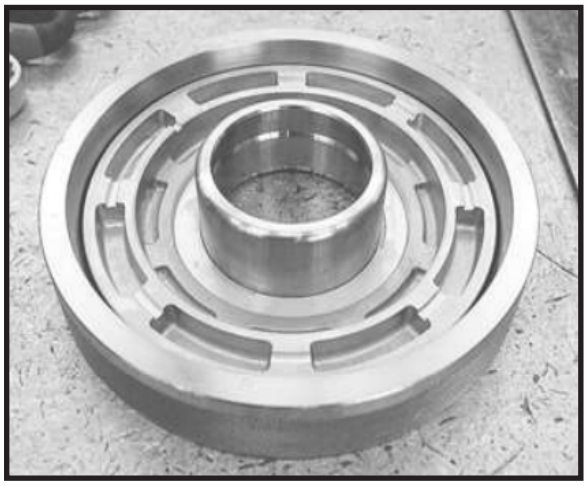

FIGURE 7: Press the new seal rings on the shaft using shown special tool.

See: Special tools in Product data.

FIGURE 8: Lubricate with care the seals on shaft and piston. Insert clutch piston.

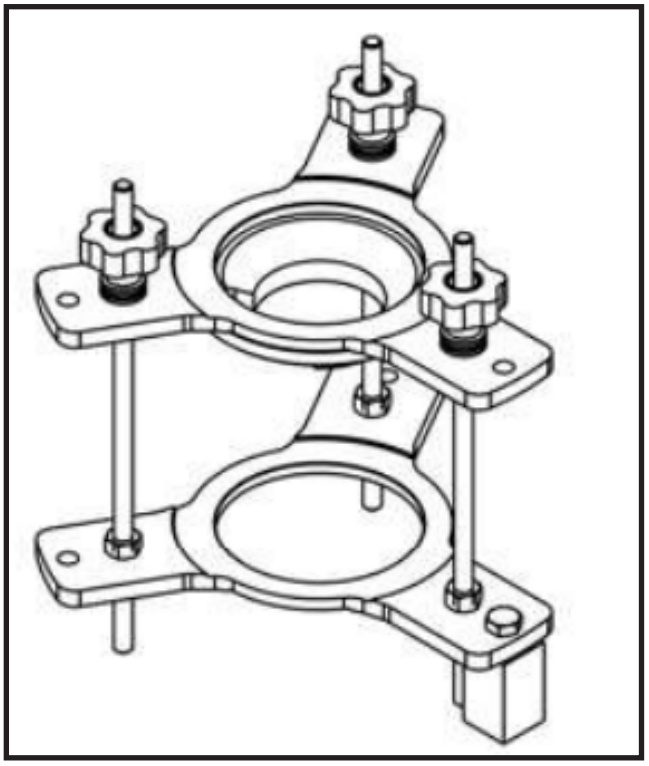

FIGURE 9: It is advisable to arrange the clutch shaft on the shown special equipment to easily complete the next steps.

See: Special tools in Product Data.

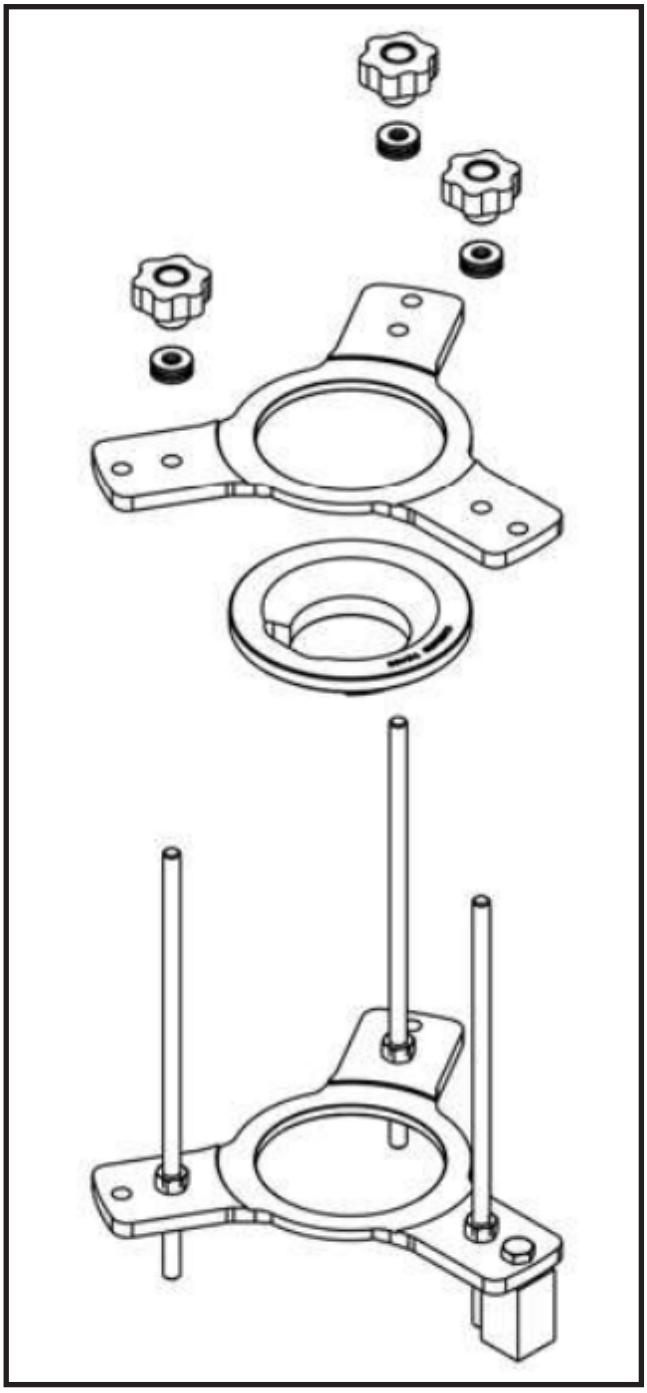

FIGURE 10: Remove the upper parts of the equipment and fix the base firmly in a vise or connect it with a screw to the work bench, then place the shaft on the base.

See: Special tools in Product Data.

FIGURE 11: Assemble the spring cup.

FIGURE 12: Assemble the spring.

FIGURE 13: Assemble the washer.

FIGURE 14: Lower the spring lock washer by using a special press or proper special tool.

See: Special tools in Product Data.

Assemble the snap ring.

FIGURE 15: Remove the special tool and overturn the shaft. Lubricate with care the seals on shaft.

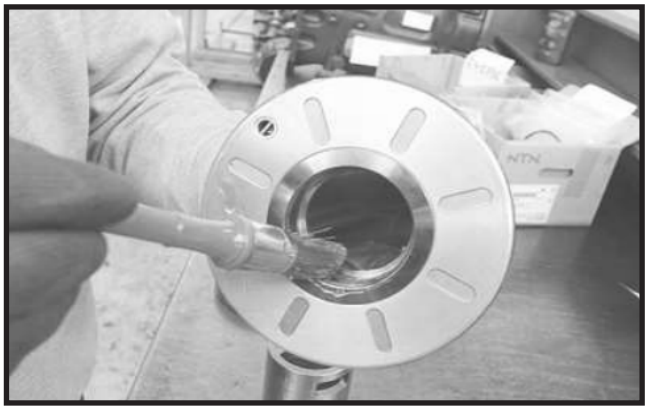

FIGURE 16: Lubricate with care the piston seals.

FIGURE 17: Insert clutch piston.

FIGURE 18: Assemble the spring cup.

FIGURE 19: Assemble the spring.

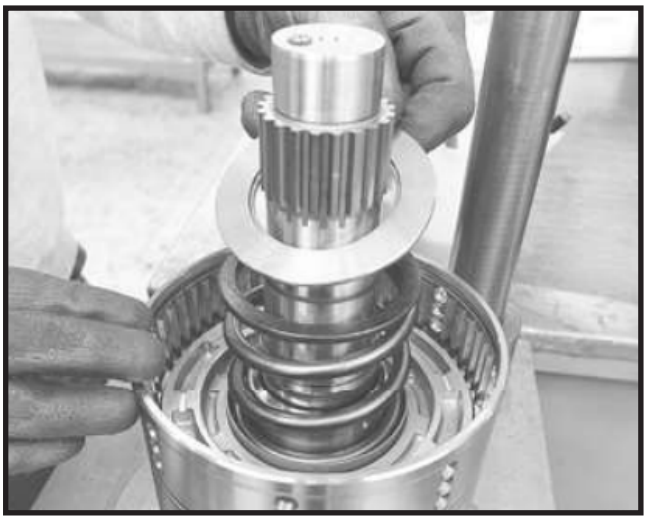

FIGURE 20: Assemble the washer.

FIGURE 21: Lower the spring lock washer by using proper special tool.

See: Special tools in Product Data.

FIGURE 22: As an alternative it is possible to lower the spring lock washer with a special press.

See: Special tools in Product Data.

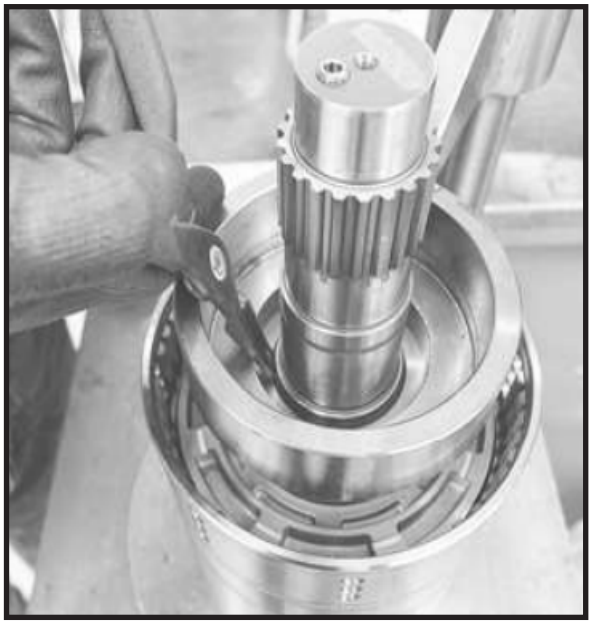

FIGURE 23: Assemble the snap ring.

FIGURE 24: Remove the special tool.

Assemble the first plate in the clutch.

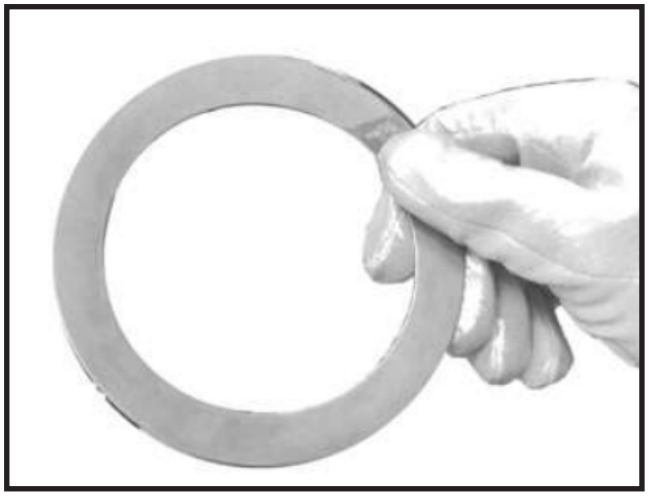

FIGURE 25: After the first plate, assemble the Belleville spring in the shown direction.

See: next step figure and main drawing of this clutch shaft.

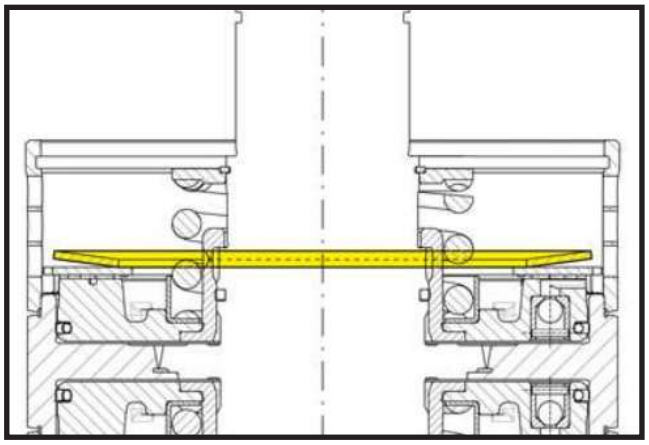

FIGURE 26: Belleville spring assembly direction.

FIGURE 27: Assemble clutch discs and plates as indicated in the main drawing of this clutch shaft.

FIGURE 28: Note: the number of clutch discs is different on two shaft sides. **See**: main drawing of this clutch shaft.

FIGURE 29: Assemble the false thrust plate and press it against the clutch pack.

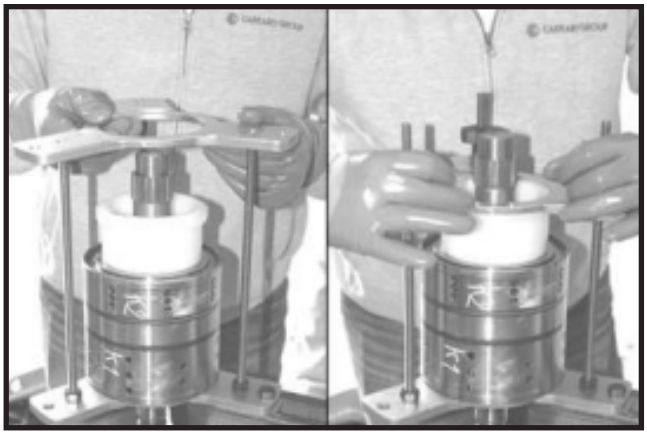

FIGURE 30: Use the indicated tool (with special buffer) to insert and remove the snap ring on the thrust washer.

See: Special tools in Product Data.

FIGURE 31: Choose the required snap ring for correct clutch assembly. **See**: Clutches backlash adjustment, in this chapter.

FIGURE 32: Perform the measurements to choose the required snap ring for correct clutch assembly.

See: Clutches backlash adjustment, in this chapter.

FIGURE 33: Note: clutch feed position with compressed air.

DANGER It is possible violent expulsion of metal parts; use robust shelters and do not expose the body in the area of possible projection.

FIGURE 34: Remove the false thrust plate and assemble the correct one for the new clutch. Important: Assemble the proper snap ring.

See: Clutches backlash adjustment, in this chapter.

FIGURE 35: Align the teeth of all clutch discs to allow the gear insertion.

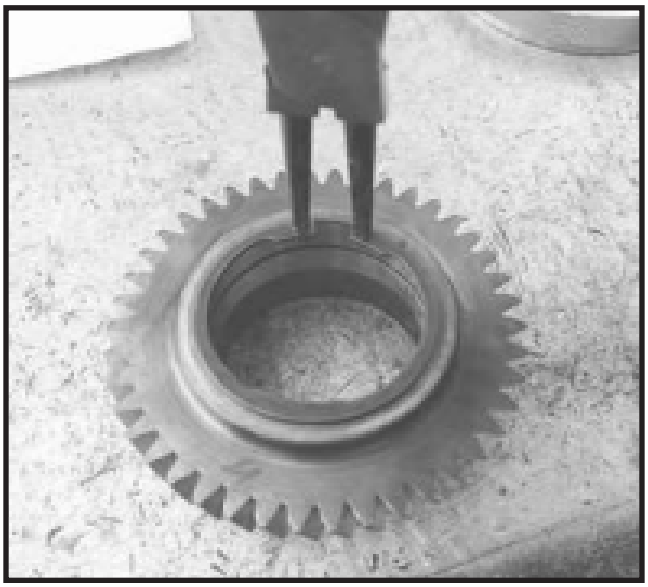

FIGURE 36: Assemble retaining ring in shown gear.

FIGURE 37: Note: check that retaining ring is properly assembled.

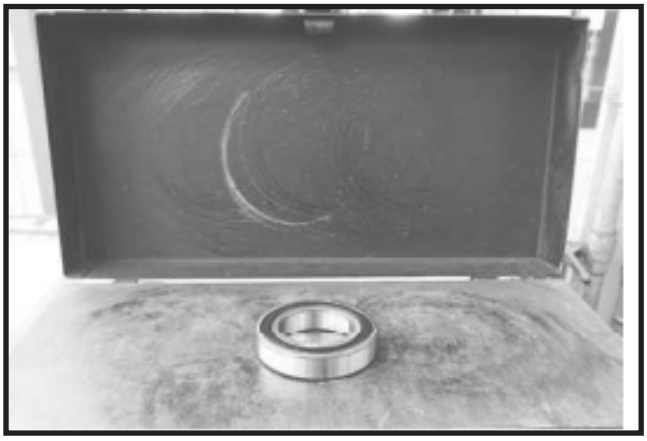

FIGURE 38: Heat the shown bearing at 212°F (100°C).

FIGURE 39: Force the bearing into its seat by using a suitable driver and hammer.

FIGURE 40: Assemble the gear as shown.

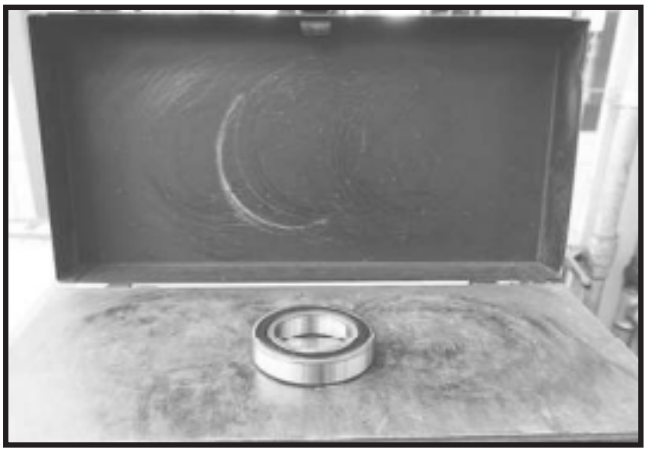

FIGURE 41: Heat the shown bearing at 212 °F (100 °C).

¡	CAUTION
Burn Hazard; wear safety protections required by current safety regulations.	

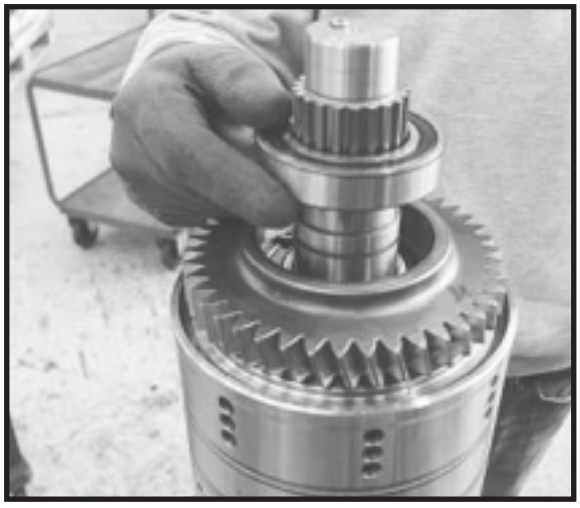

FIGURE 42: Assemble the bearing on the gear.

FIGURE 43: Force the bearing into its seat by using a suitable driver and hammer.

FIGURE 44: Assemble the retaining ring on shaft to stop the bearing and gear group.

FIGURE 45: Note: check that retaining ring is properly assembled.

FIGURE 46: Assemble the gear as shown.

FIGURE 47: Fit the gear into relative seat by using a suitable driver and hammer.

FIGURE 48: Heat the shown bearing cone at 212 °F (100 °C).

¡	**CAUTION**
Burn Hazard; wear safety protections required by current safety regulations.	

FIGURE 49: Assemble the bearing cone on the gear.

FIGURE 50: Overturn the shaft and assemble the first plate in the clutch.

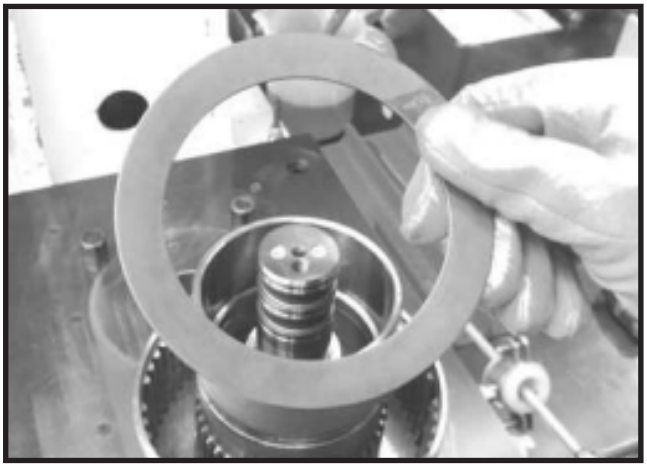

FIGURE 51: After the first plate, assemble the Belleville spring in the shown direction. **See**: next step figure and main drawing of this clutch shaft.

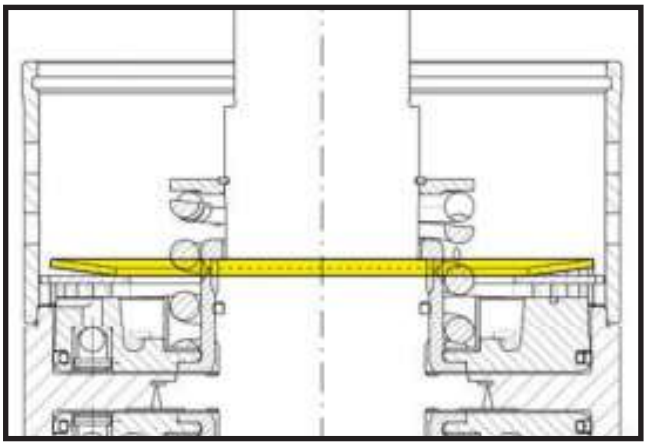

FIGURE 52: Belleville spring assembly direction.

FIGURE 53: Assemble clutch discs and plates as indicated in the main drawing of this clutch shaft.

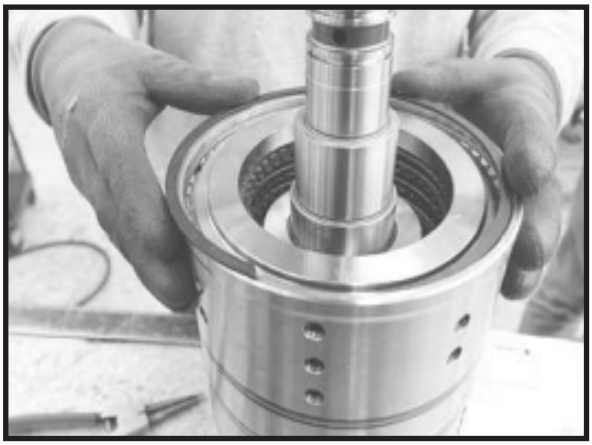

FIGURE 54: Assemble the false thrust plate and press it against the clutch pack.

Important: Choose the required snap ring for correct clutch assembly.

See: Clutches backlash adjustment, in this chapter.

FIGURE 55: Note: clutch feed position with compressed air.

WARNING

It is possible violent expulsion of metal parts; use robust shelters and do not expose the body in the area of possible projection.

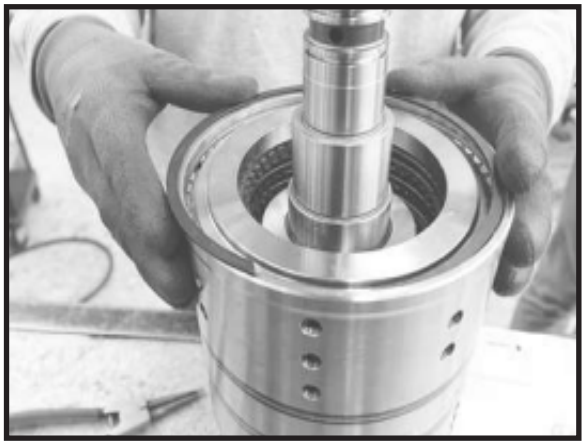

FIGURE 56: Remove the false thrust plate and assemble the correct one for the new clutch.

Important: Assemble the proper snap ring.

See: Clutches backlash adjustment, in this chapter.

FIGURE 57: Assemble retaining ring in shown gear.

FIGURE 59: Assemble the gear as shown.

FIGURE 60: Assemble the bearing on the gear.

FIGURE 61: Force the bearing into its seat by using a suitable driver and hammer.

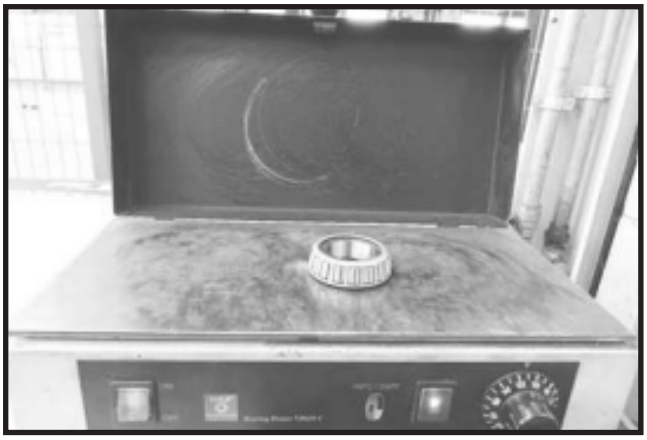

FIGURE 62: Heat the shown bearing cone at 212 °F (100 °C).

CAUTION

Burn Hazard; wear safety protections required by current safety regulations.

FIGURE 63: Force the bearing cone into its seat by using a suitable driver and hammer.

FIGURE 64: Note: clutch feed position with compressed air.

WARNING

It is possible violent expulsion of metal parts; use robust shelters and do not expose the body in the area of possible projection.

FIGURE 65: Assemble new seal rings on the shaft using special spacer tools.

See: Special tools in Product data.

FIGURE 66: Important: Verify that all seal rings are properly seated, before proceeding to the next step.

FIGURE 67: Press the new seal rings on the shaft using shown special tool.

See: Special tools in Product data.

FIGURE 68: Seal rings properly fitted.

Clutch shaft (FH-K3) – Axis B

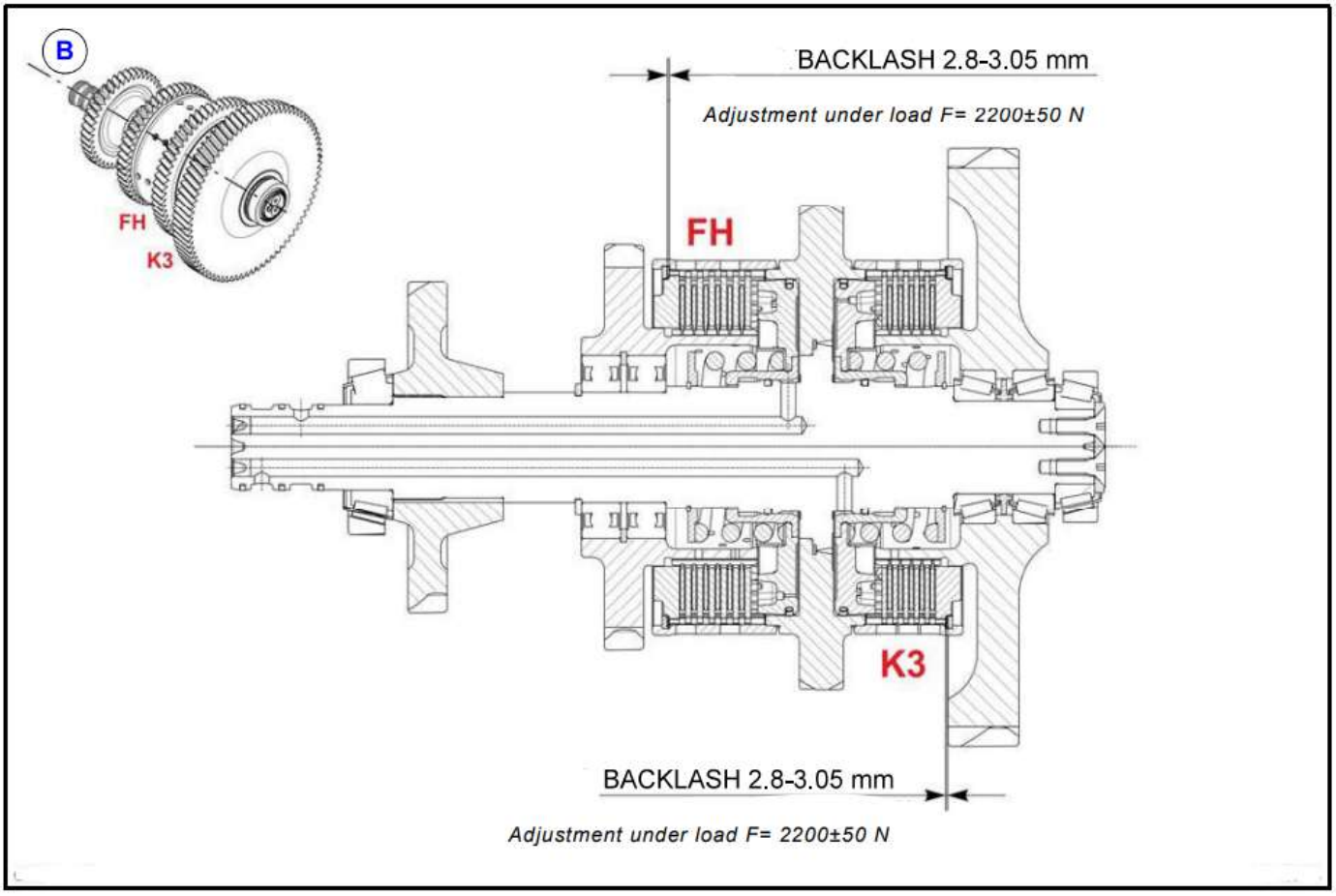

AVAILABLE SNAP RINGS RANGE							
Thickness (in/mm)	0,085 in	0,091 in	0,096 in	0,102 in	0,108 in	0,114 in	0,118 in
0,079 in 2,00 mm	2,15 mm	2,30 mm	2,45 mm	2,60 mm	2,75 mm	2,90 mm	3,00 mm
Quantity	As required						

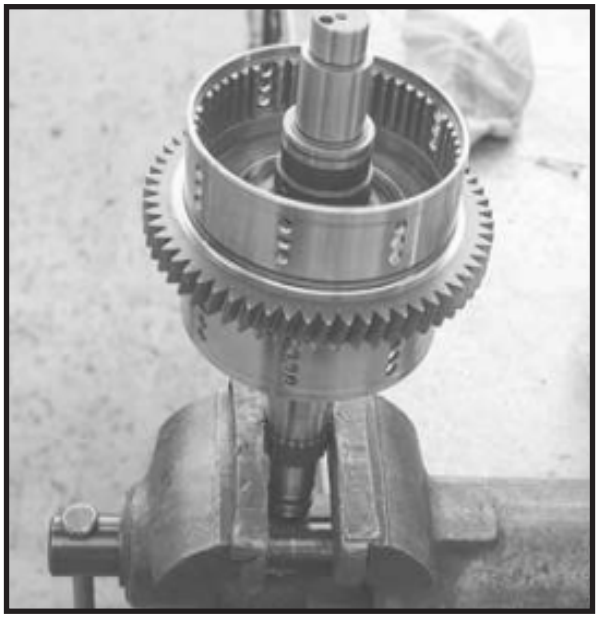

FIGURE 1: Lock the shaft in a wise

Note: use proper clamps to avoid damaging it.

FIGURE 2: Assemble a new Quad-Ring as shown.

FIGURE 3: Quad-Ring properly fitted.

Important: verify that the Quad-Ring is not twisted during installation.

FIGURE 4: Assemble a new O-ring as shown.

FIGURE 5: Fit a new anti-extrusion ring on the O-Ring.

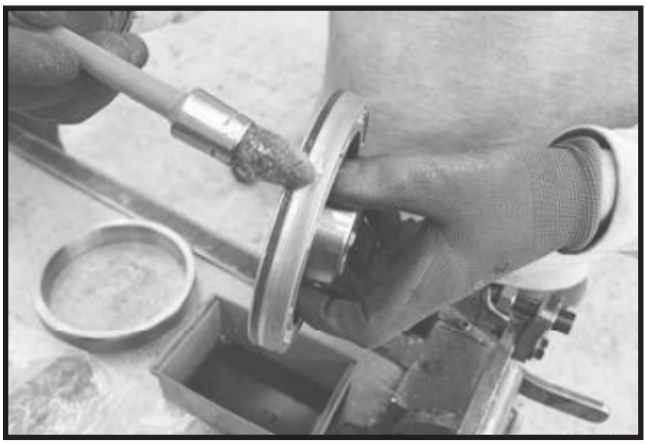

FIGURE 6: Lubricate the seal ring.

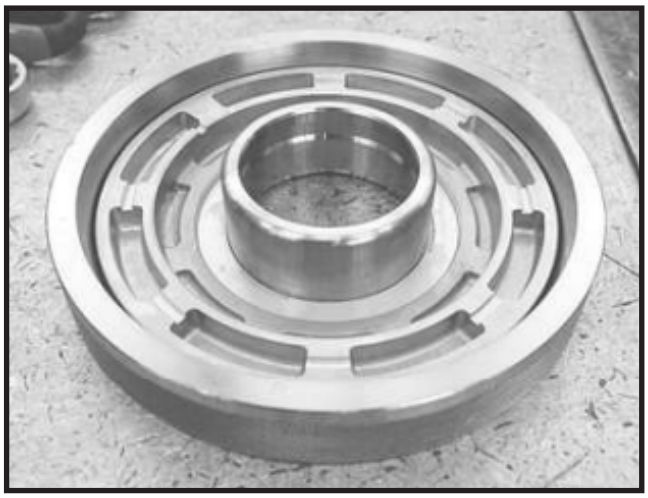

FIGURE 7: Press the new seal rings on the shaft using shown special tool.

See: Special tools in Product data.

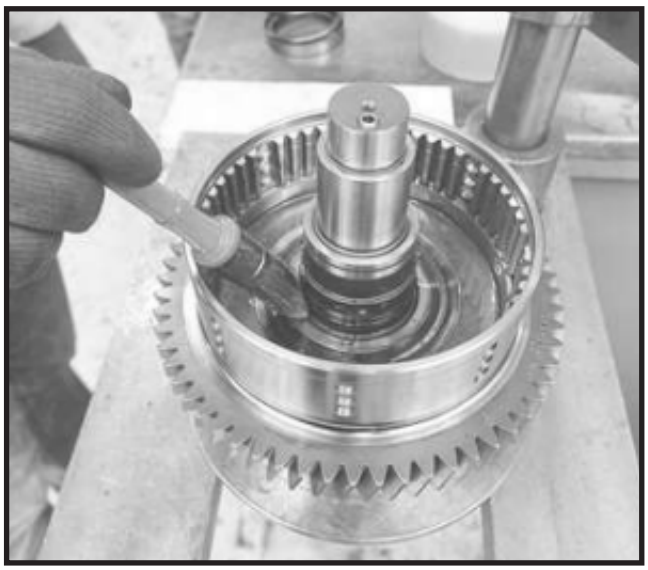

FIGURE 8: Lubricate with care the seals on shaft.

FIGURE 9: Lubricate with care the piston seals.

FIGURE 10: Assemble clutch piston.

FIGURE 11: Push the piston to the end.

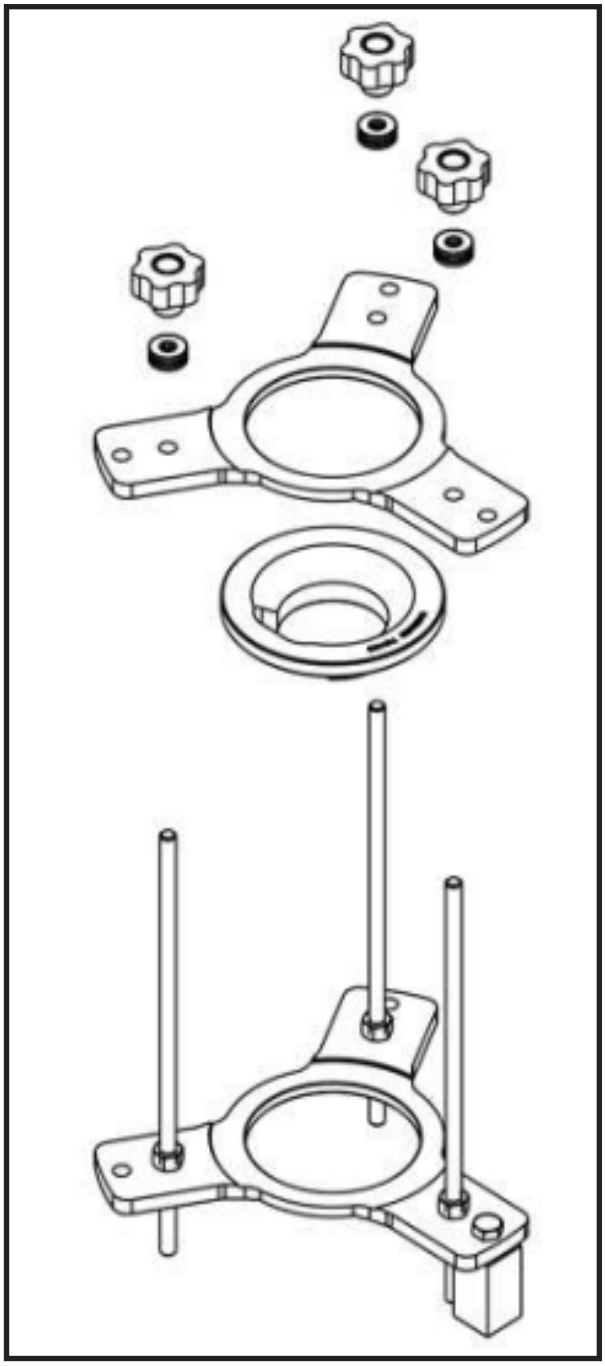

FIGURE 12: It is advisable to arrange the clutch shaft on the shown special equipment to easily complete the next steps.

See: Special tools in Product Data.

Remove the upper parts of the equipment and fix the base firmly in a vise or connect it with a screw to the work bench.

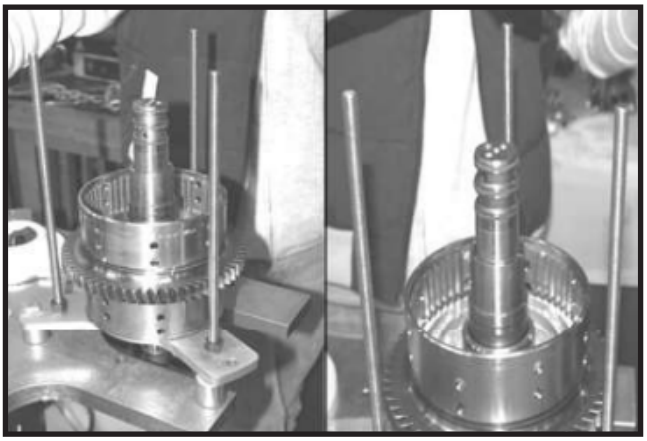

FIGURE 13: Place the clutch shaft on the base of the special tool already firmly fixed.

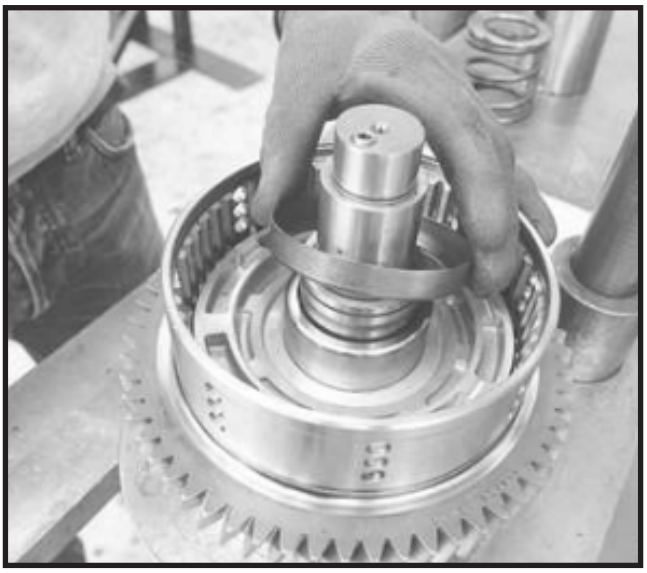

FIGURE 14: Assemble the spring cup.

FIGURE 15: Assemble the spring.

FIGURE 16: Assemble the washer.

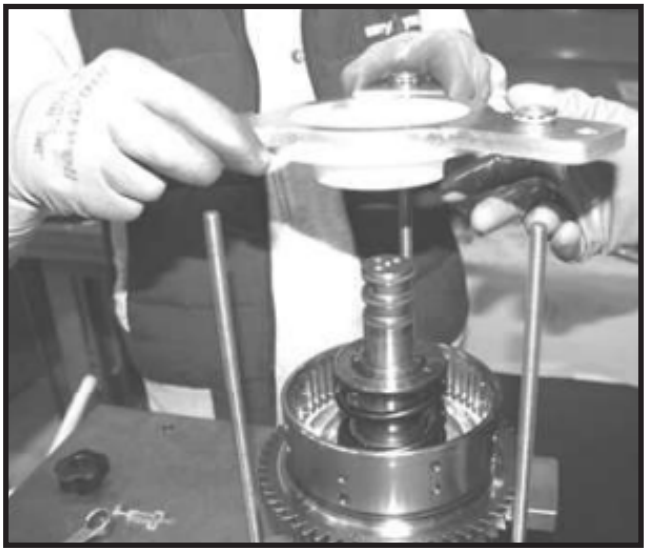

FIGURE 17: Assemble the proper special tool.

See: Special tools in Product Data.

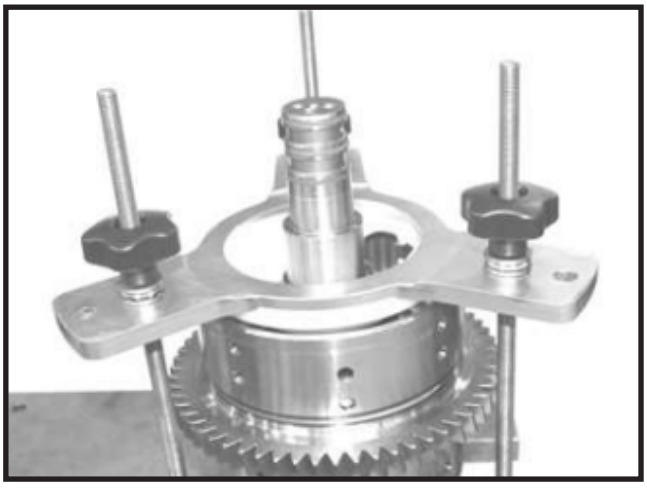

FIGURE 18: Lower the spring lock washer by using proper special tool.

See: Special tools in Product Data.

FIGURE 19: As an alternative it is possible to lower the spring lock washer with a special press.

See: Special tools in Product Data.

FIGURE 20: Assemble the snap ring.

FIGURE 21: Remove the special tool.

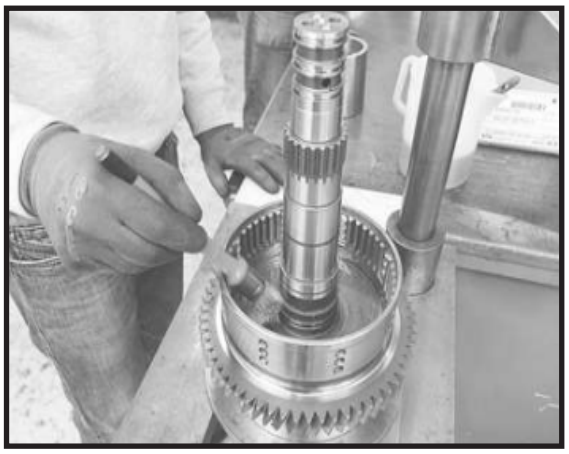

FIGURE 22: Overturn the shaft and lubricate the Quad-Ring.

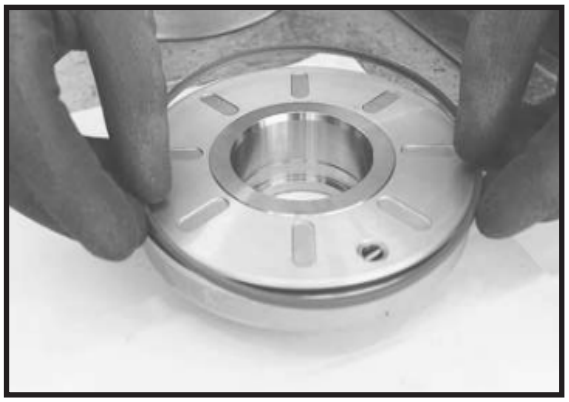

FIGURE 23: Fit a new O-ring and new anti-extrusion ring on the piston.

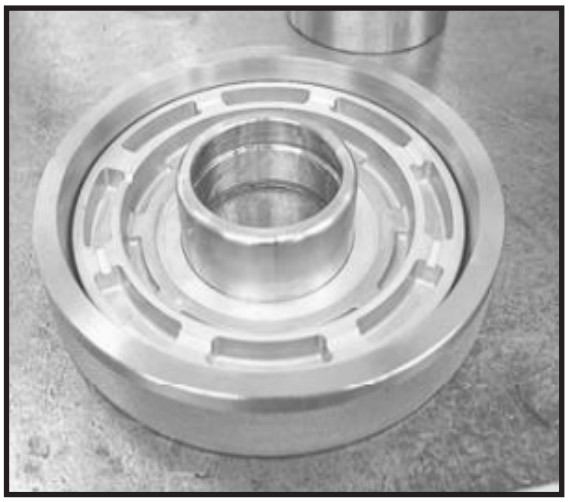

FIGURE 24: Press the new seal rings on the shaft using shown special tool.

See: Special tools in Product data.

FIGURE 25: Lubricate with care the piston seals.

FIGURE 26: Insert clutch piston.

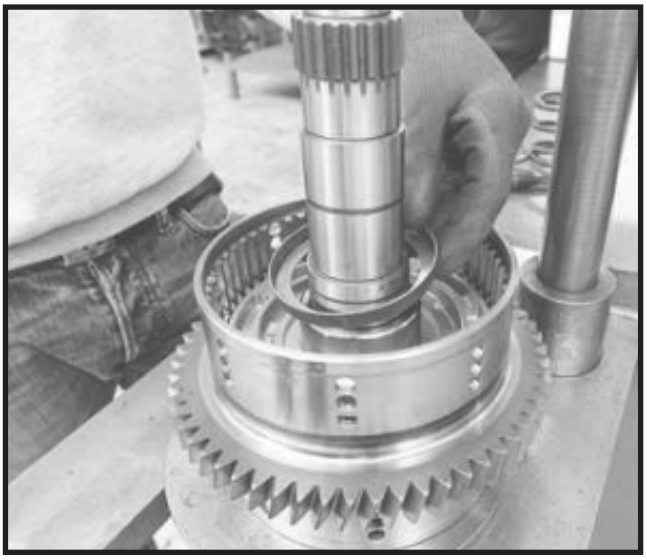

FIGURE 27: Assemble the spring cup.

FIGURE 28: Assemble the spring.

FIGURE 29: Assemble the washer.

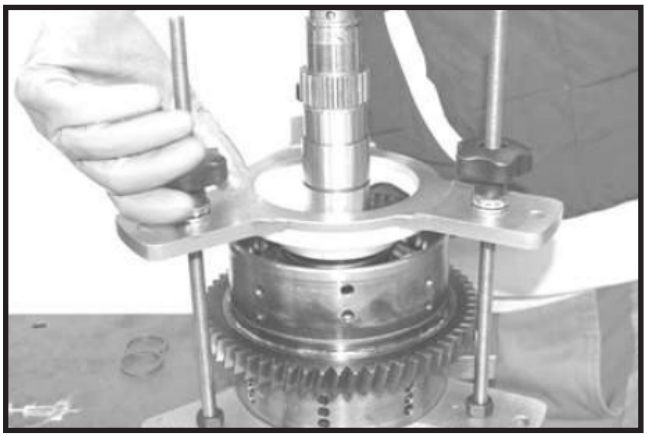

FIGURE 30: Lower the spring lock washer by using proper special tool.

See: Special tools in Product Data.

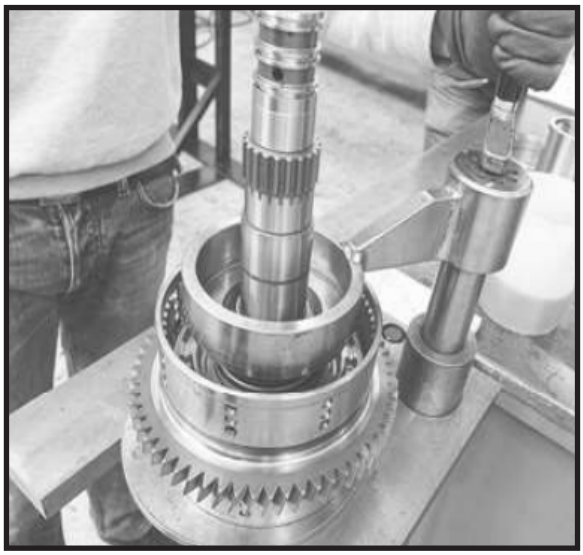

FIGURE 31: As an alternative it is possible to lower the spring lock washer with a special press.

See: Special tools in Product Data.

FIGURE 32: Assemble the snap ring.

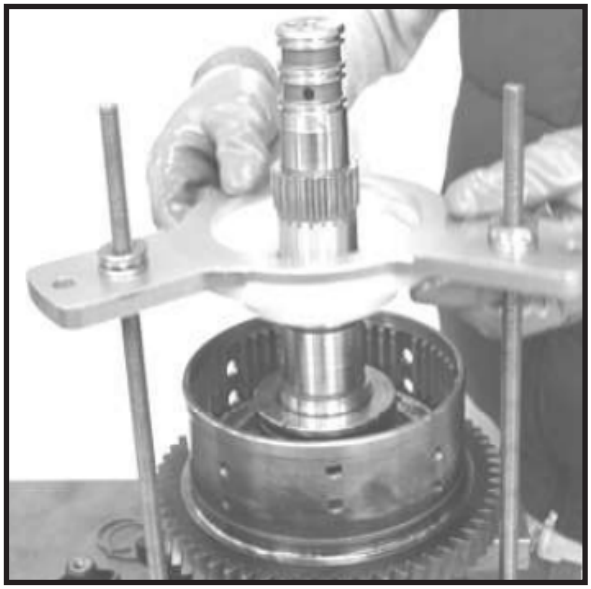

FIGURE 33: Remove the special tool.

FIGURE 34: Lock the shaft in a wise

Note: use proper clamps to avoid damaging it.

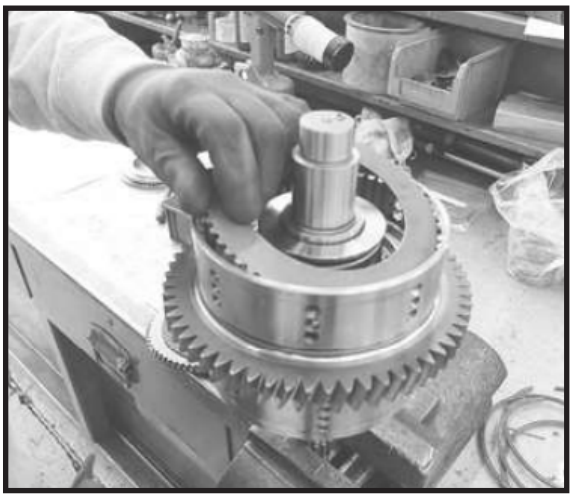

FIGURE 35: Assemble the first plate in the clutch.

FIGURE 36: Assemble clutch discs and plates as indicated in the main drawing of this clutch shaft.

See: main drawing of this clutch shaft.

FIGURE 37: Assemble the false thrust plate and press it against the clutch pack.

See: Clutches backlash adjustment, in this chapter.

FIGURE 38: Choose the required snap ring for correct clutch assembly.

See: Clutches backlash adjustment, in this chapter.

FIGURE 39: Note: clutch feed position with compressed air.

WARNING

It is possible violent expulsion of metal parts; use robust shelters and do not expose the body in the area of possible projection.

FIGURE 40: Remove the false thrust plate and assemble the correct one for the new clutch.

Assemble the proper snap ring.

See: Clutches backlash adjustment, in this chapter.

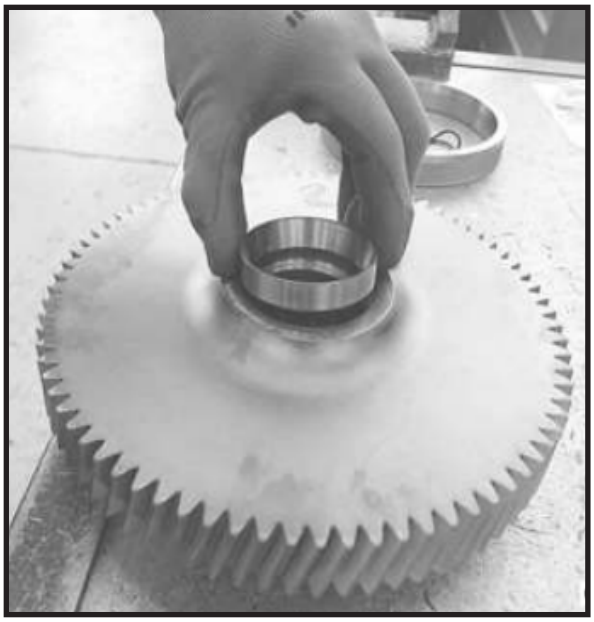

FIGURE 41: Assemble the bearing cup to shown gear.

See: orient the bearings as shown.

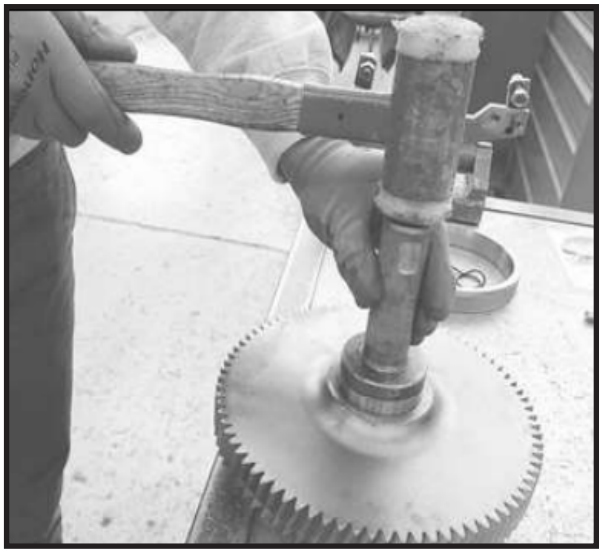

FIGURE 42: Force the bearing into its seat by using a suitable driver and hammer.

FIGURE 43: Bearing cup properly assembled.

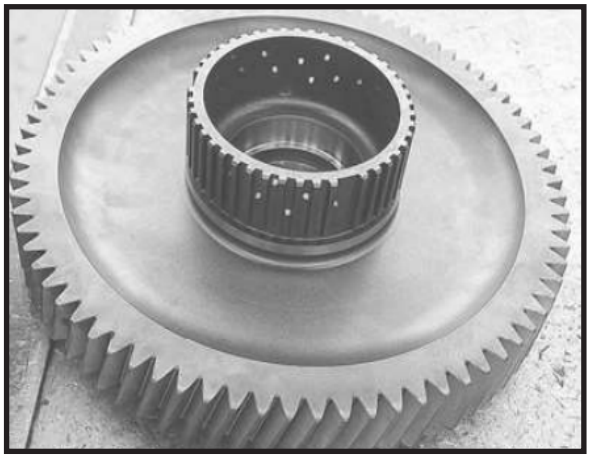

FIGURE 44: Overturn the gear.

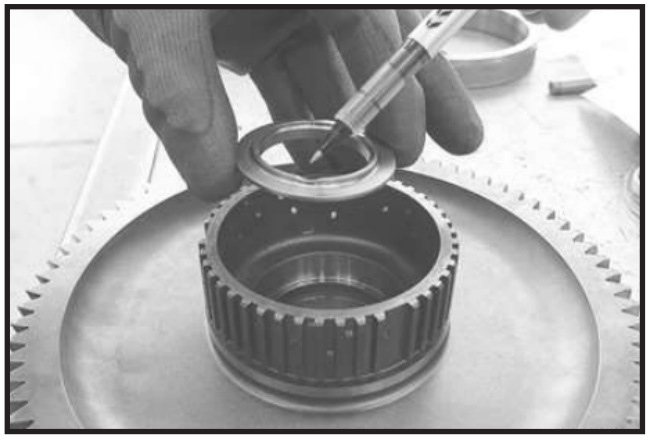

FIGURE 45: Assemble the shown washer in the indicated position (edge up).

Note: instruction valid only where washer with one slot is present; in the new version this washer is symmetrical and has no preferential direction of assembly.

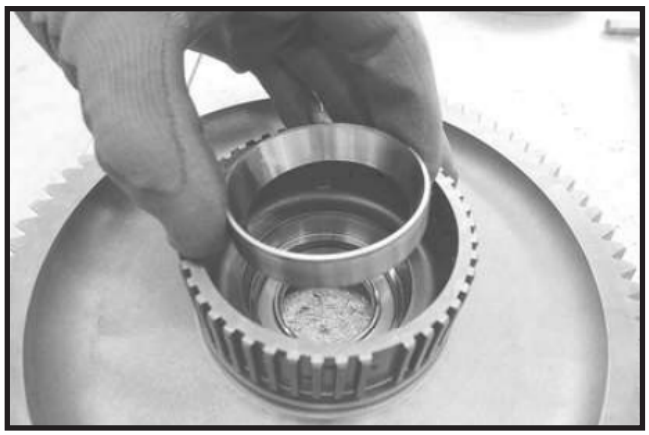

FIGURE 46: Assemble the bearing cup to the gear.

See: orient the bearings as shown.

FIGURE 47: Force the bearing into its seat by using a suitable driver and hammer.

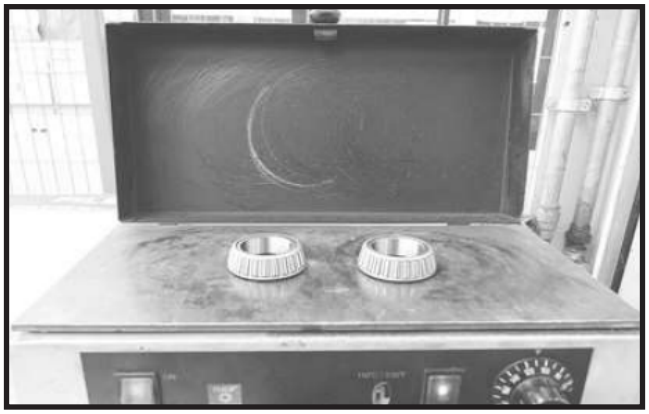

FIGURE 48: Heat the shown bearing cones at 212 °F (100 °C).

İ	**CAUTION**
Burn Hazard; wear safety protections required by current safety regulations.	

FIGURE 49: Place the tapered bearing cone on shaft.

See: orient the bearings as shown.

FIGURE 50: Force the bearing into its seat by using a suitable driver and hammer.

FIGURE 51: Bearing cone properly assembled.

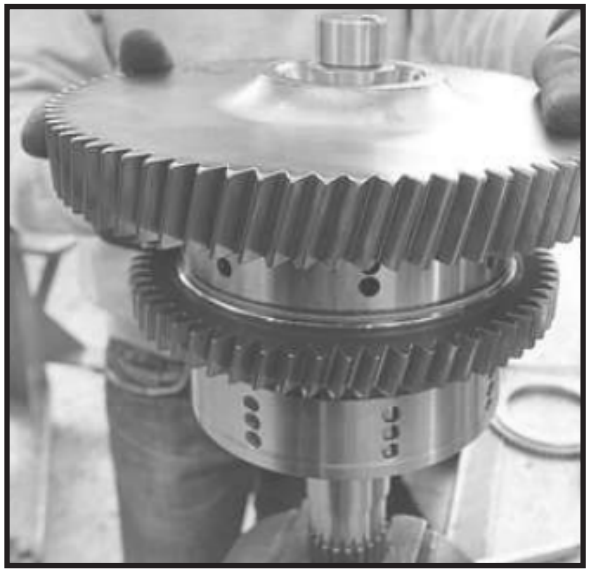

FIGURE 52: Assemble the gear as shown.

FIGURE 53: Place the tapered bearing cone on gear.

See: orient the bearings as shown.

FIGURE 54: Force the bearing into its seat by using a suitable driver and hammer.

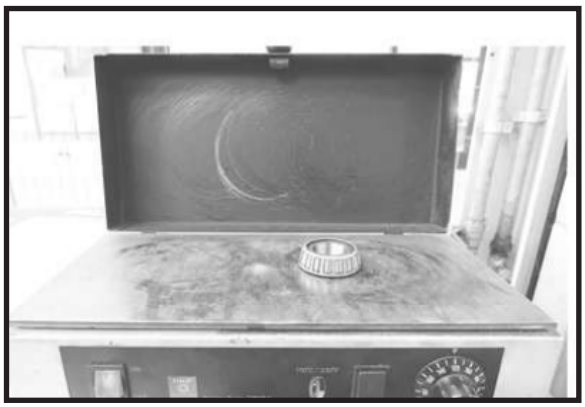

FIGURE 55: Heat the shown bearing cone at 212 °F (100 °C).

¡	CAUTION
Burn Hazard; wear safety protections required by current safety regulations.	

FIGURE 56: Place the tapered bearing cone on gear.

See: orient the bearings as shown.

FIGURE 57: Force the bearing into its seat by using a suitable driver and hammer.

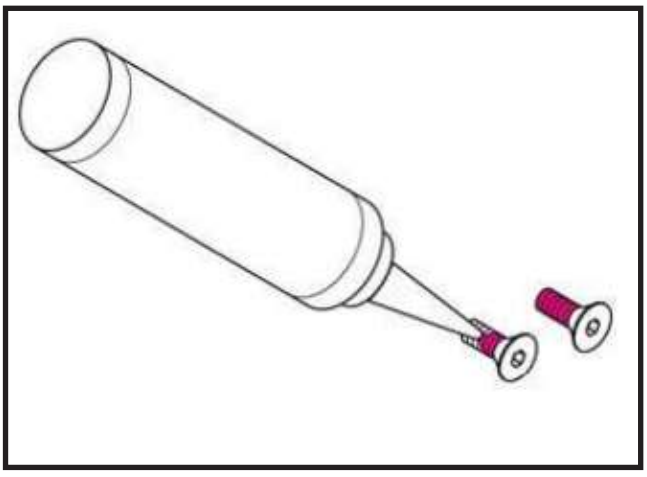

FIGURE 58: Apply the prescribed sealant on the thread of bearing flange bolts.

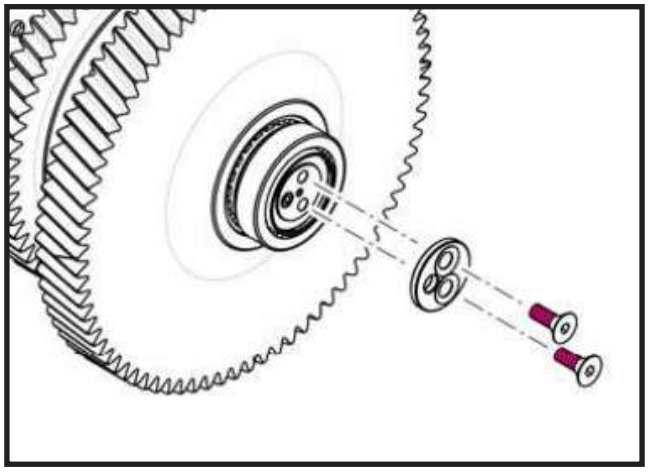

FIGURE 59: Assemble the bearing flange with relative bolts. Tighten the fastening bolts to prescribed torque with dynamometric wrench.

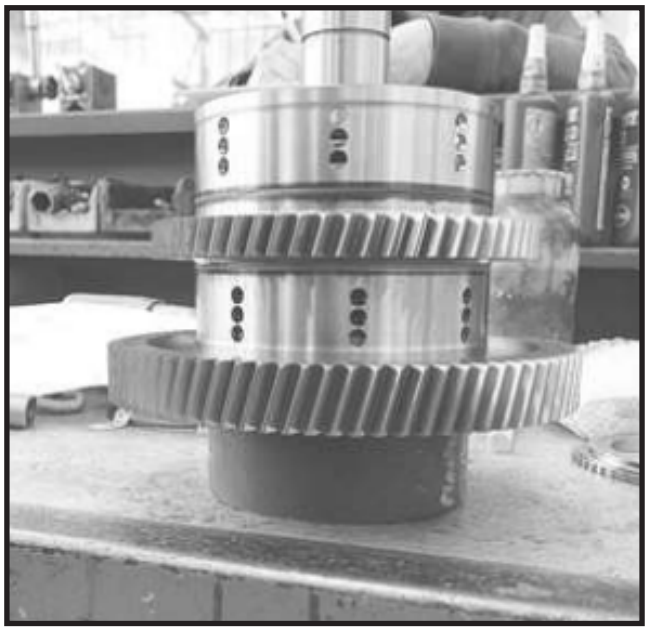

FIGURE 60: Overturn the shaft and place it on suitable support.

FIGURE 61: Assemble the first plate in the clutch.

FIGURE 62: Assemble clutch discs and plates as indicated in the main drawing of this clutch shaft.

FIGURE 63: Assemble the false thrust plate and press it against the clutch pack.

See: Clutches backlash adjustment, in this chapter.

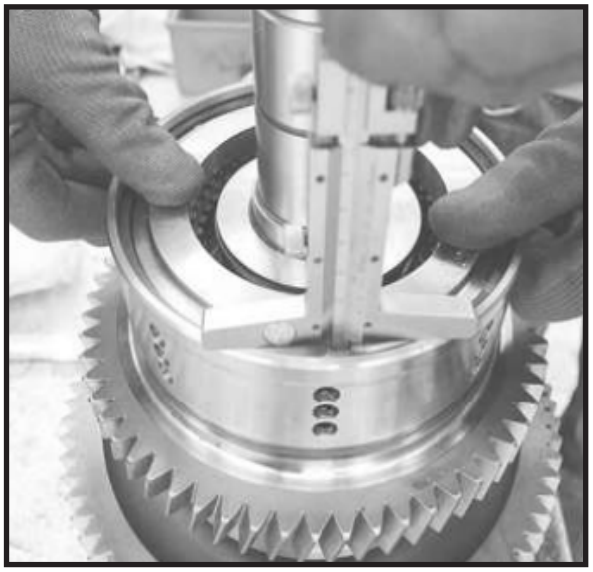

FIGURE 64: Important: Choose the required snap ring for correct clutch assembly.

See: Clutches backlash adjustment, in this chapter.

FIGURE 65: Note: clutch feed position with compressed air.

DANGER It is possible violent expulsion of metal parts; use robust shelters and do not expose the body in the area of possible projection.

FIGURE 66: Remove the false thrust plate and assemble the correct one for the new clutch.

Important: Assemble the proper snap ring.

See: Clutches backlash adjustment, in this chapter.

FIGURE 67: Align the teeth of all clutch discs to allow the gear insertion.

FIGURE 68: Assemble retaining ring in shown gear.

FIGURE 69: Note: check that retaining ring is properly assembled.

FIGURE 70: Heat the shown bearing at 212 °F (100 °C).

¡	CAUTION
Burn Hazard; wear safety protections required by current safety regulations.	

FIGURE 71: Assemble the bearing on the shaft.

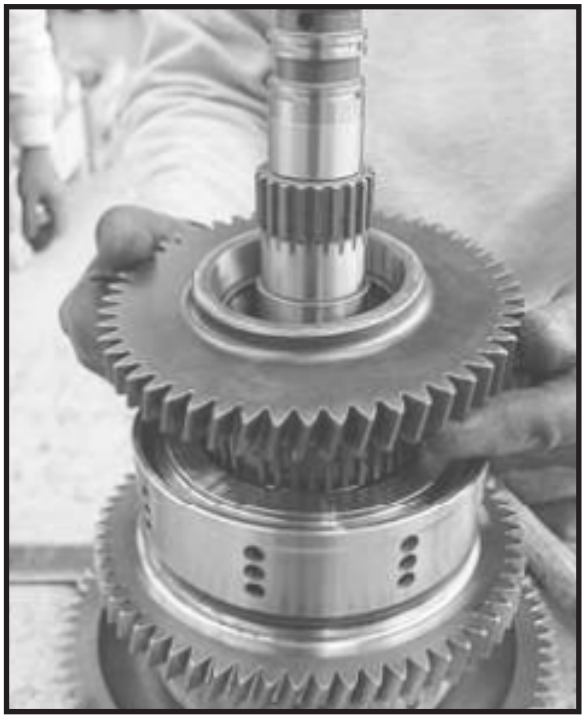

FIGURE 72: Assemble the gear as shown.

FIGURE 74: Assemble the bearing on the gear.

FIGURE 73: Force the bearing/gear group into its seat by using a suitable driver and hammer.

FIGURE 75: Force the bearing into its seat by using a suitable driver and hammer.

FIGURE 76: Assemble the retaining ring on shaft to stop the bearing and gear group.

FIGURE 77: Note: check that retaining ring is properly assembled.

FIGURE 78: Assemble the gear as shown.

FIGURE 79: Fit the gear into relative seat by using a suitable driver and hammer.

FIGURE 80: Heat the shown bearing cone at 212 °F (100 °C).

CAUTION

Burn Hazard; wear safety protections required by current safety regulations.

FIGURE 81: Assemble the bearing cone on the gear.

See: Orient the bearings as shown.

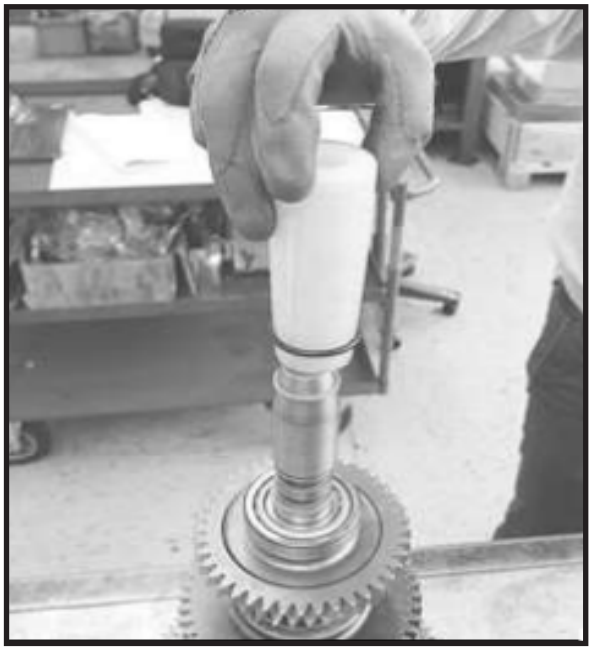

FIGURE 82: Assemble new seal rings on the shaft using special spacer tools. **See**: Special tools in Product data.

FIGURE 83: Important: Verify that all seal rings are properly seated, before proceeding to the next step.

FIGURE 84: Press the new seal rings on the shaft using shown special tool.**See**: Special tools in Product data.

Input shaft (REV-FL) – Axis A

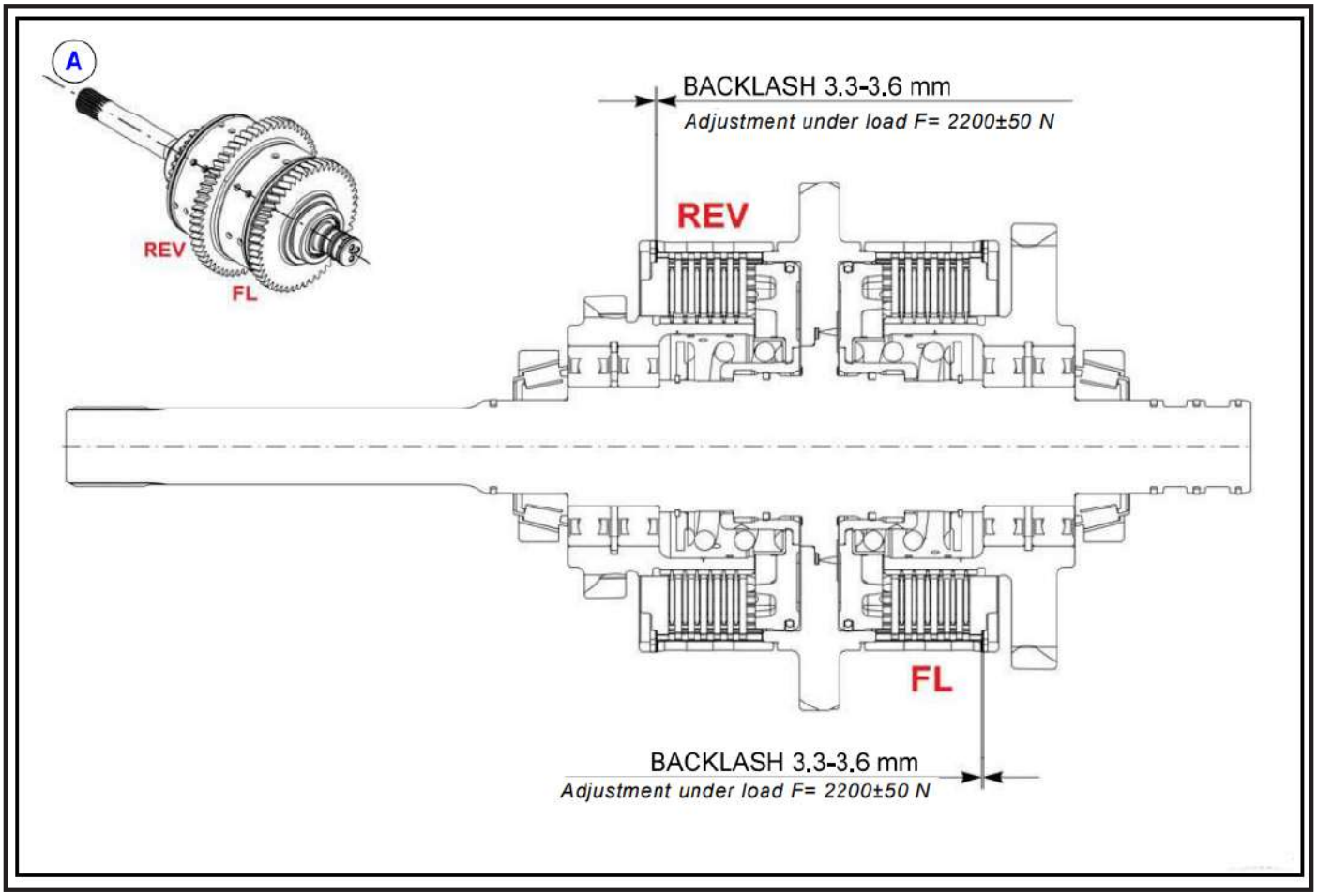

AVAILABLE SNAP RINGS RANGE							
Thickness (in/mm)	0,085 in	0,091 in	0,096 in	0,102 in	0,108 in	0,114 in	0,118 in
0,079 in 2,00 mm	2,15 mm	2,30 mm	2,45 mm	2,60 mm	2,75 mm	2,90 mm	3,00 mm
Quantity	As required						

FIGURE 1: Place the shown gear on the work bench and assemble the snap ring as in figure.

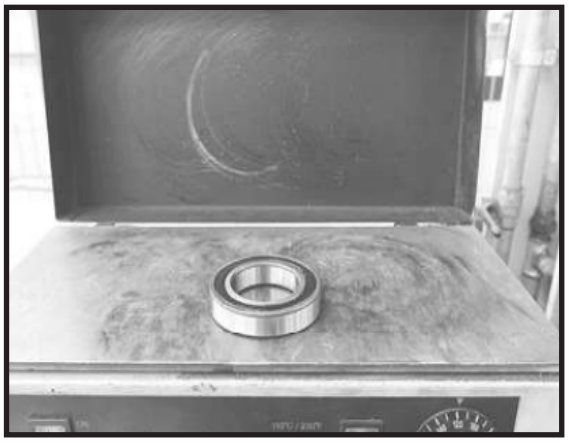

FIGURE 2: Heat the shown bearing at 212 °F (100 °C).

!	**CAUTION**
Burn Hazard; wear safety protections required by current safety regulations.	

FIGURE 3: Assemble the clutch group as described for previous clutch shafts.

Important: observe the backlash value in main drawing.

Assemble the bearing on the shaft.

FIGURE 4: Assemble the gear as shown.

FIGURE 5: Assemble the bearing on the gear.

FIGURE 6: Force the bearing/gear group into its seat by using a suitable driver and hammer.

FIGURE 7: Heat the shown bearing cone at 212 °F (100 °C).

CAUTION Burn Hazard; wear safety protections required by current safety regulations.

FIGURE 8: Place the tapered bearing cone on gear.

See: orient the bearings as shown.

FIGURE 9: Assemble the clutch groups as described for previous clutch shafts.

FIGURE 10: Important: observe the backlash value in main drawing for each clutch group.

FIGURE 11: Heat the shown bearing at 212 °F (100 °C).

¡	**CAUTION**
Burn Hazard; wear safety protections required by current safety regulations.	

FIGURE 12: Assemble the bearing on the shaft.

FIGURE 13: Assemble the gear as shown.

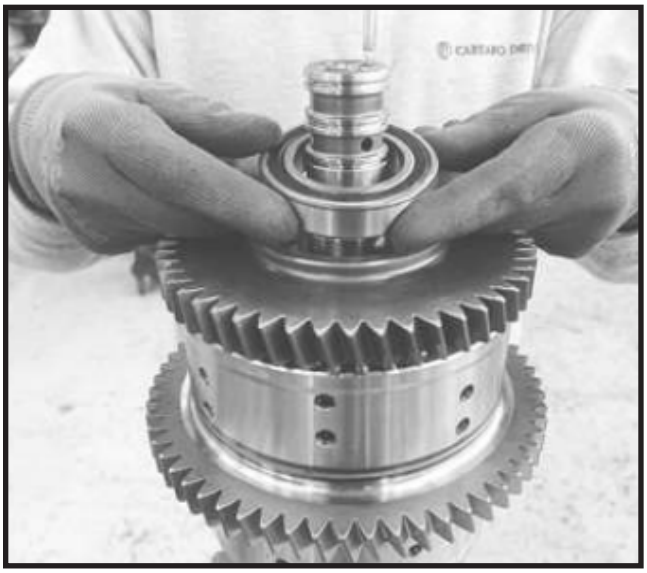

FIGURE 14: Assemble the bearing on the gear.

FIGURE 15: Force the bearing into its seat by using a suitable driver and hammer.

FIGURE 16: Heat the shown bearing cone at 212 °F (100 °C).

¡	**CAUTION**

Burn Hazard; wear safety protections required by current safety regulations.

FIGURE 17: Force the bearing into its seat by using a suitable driver and hammer.

See: orient the bearings as shown.

FIGURE 18: Assemble new seal rings on the shaft using special spacer tools.

See: Special tools in Product data.

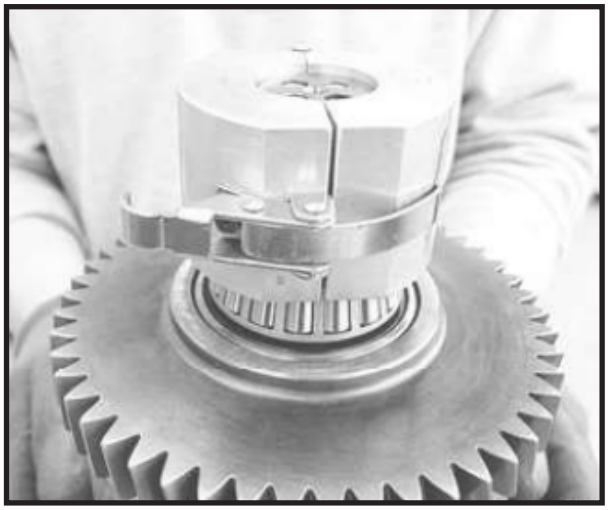

FIGURE 19: Press the new seal rings on the shaft using shown special tool.

See: Special tools in Product data.

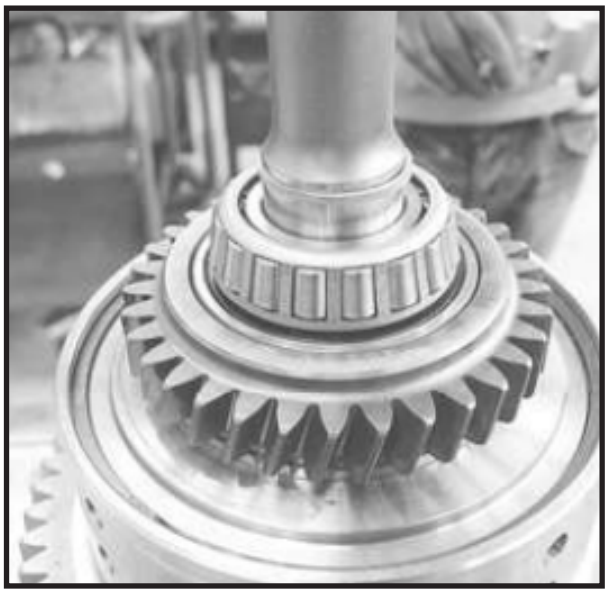

FIGURE 20: Overturn the clutch shaft.

Assemble new seal ring in the shown position on the shaft.

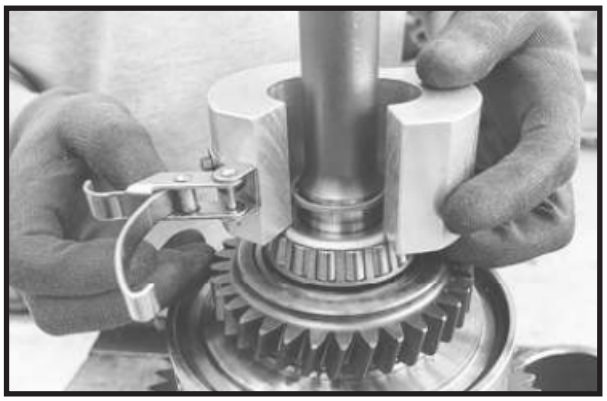

FIGURE 21: Press the seal ring on the shaft using shown special tool.

See: Special tools in Product data.

Shaft Backlash Adjustment

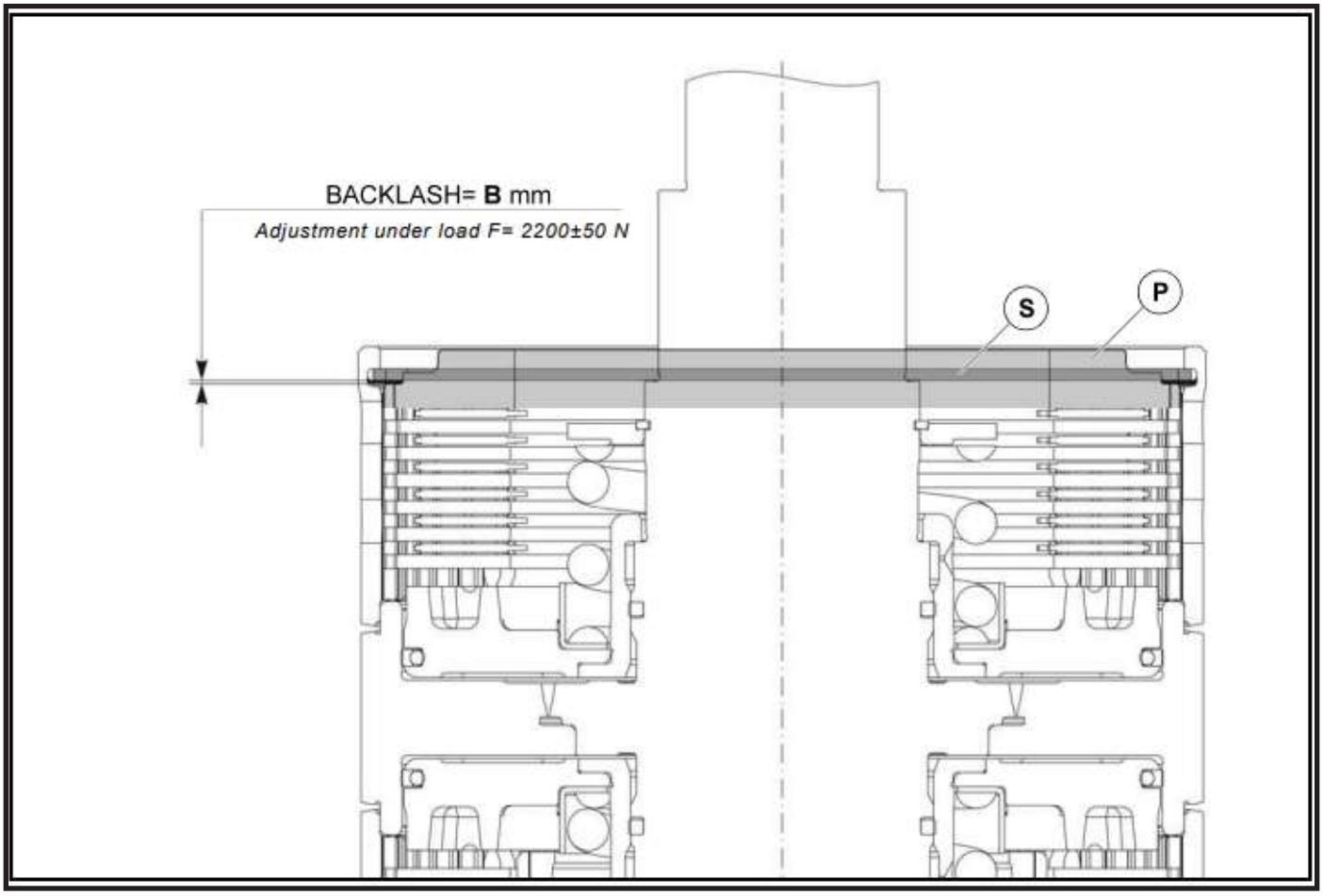

AVAILABLE SNAP RINGS RANGE							
Thickness (in/mm) S1	S2	S3	S4	S5	S6	S7	S8
Quantity	As required						

FIGURE 1: After assembling the clutch discs to a new clutch shaft (see relative section in this manual) it's necessary to choose the correct stop ring (S) of the disc pack.

FIGURE 2: To choose the correct snap ring (S) for the clutch disc pack, you must use a false thrust plate (P) of proper size for easy disassembly.

FIGURE 3: Assemble the false thrust plate and press it against the clutch pack.

FIGURE 4: Assemble the smallest snap ring (thickness S_0) in the AVAILABLE SNAP RINGS RANGE.

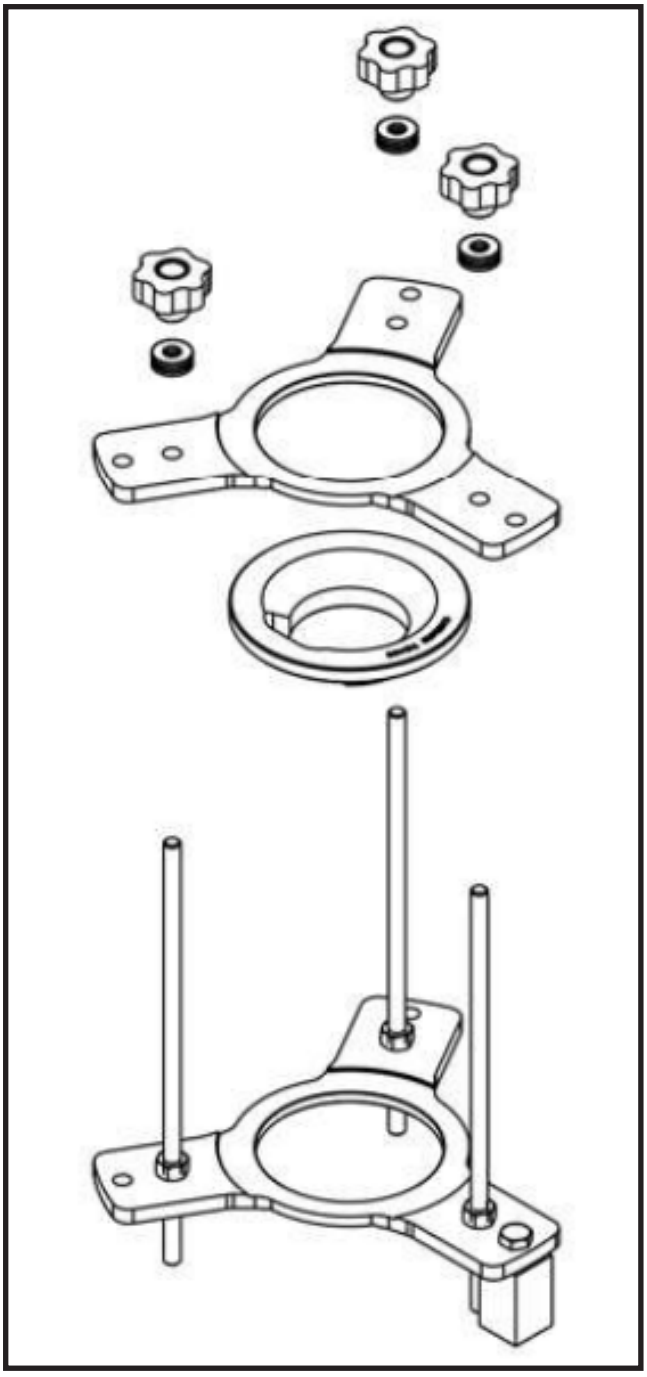

FIGURE 5: Install the shown special equipment to easily complete the next steps.

See: Special tools in Product Data.

Remove the upper parts of the equipment and fix the base firmly in a vise or connect it with a screw to the work bench.

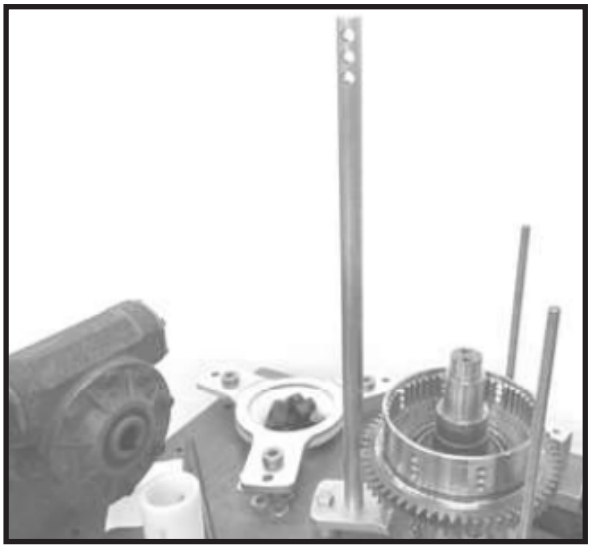

FIGURE 6: Remove one of the rods from the base and fix the long rod, as shown.

See: Special tools in Product data.

Place the clutch shaft on the support base.

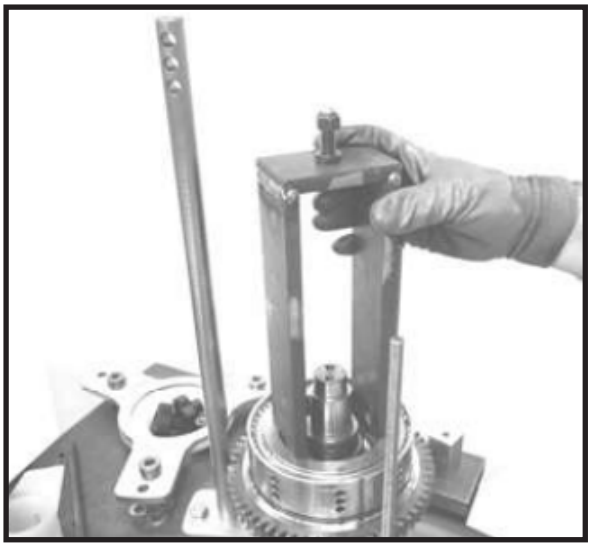

FIGURE 7: Place indicated spacer on the false thrust plate. **See**: Special tools in Product data.

FIGURE 8: Fasten the rod with hook to long rod with bolt and nut, as shown.

See: Special tools in Product data.

FIGURE 9: Adjust the screw to set the rod with hook horizontally (it is recommended to use a spirit level to check).

See: Special tools in Product data.

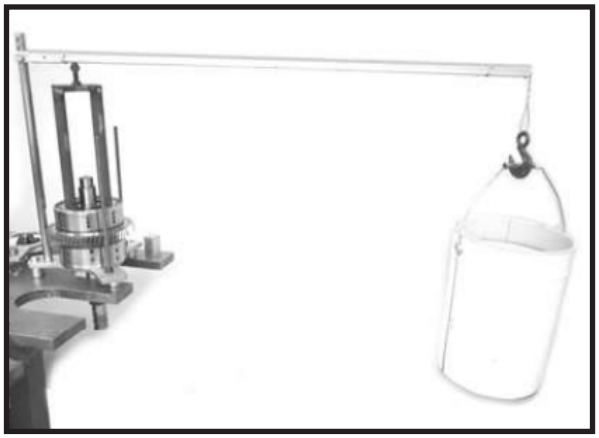

FIGURE 10: Attach a weight of 20 kg / 44 lb (± 1 kg / ± 2.2 lb) to the hook, for example a bucket with about 5.28 gal. (20 liters) of water. **See**: Special tools in Product data.

FIGURE 11: The use of a calibrated weight of 20 kg / 44 lb is recommended.

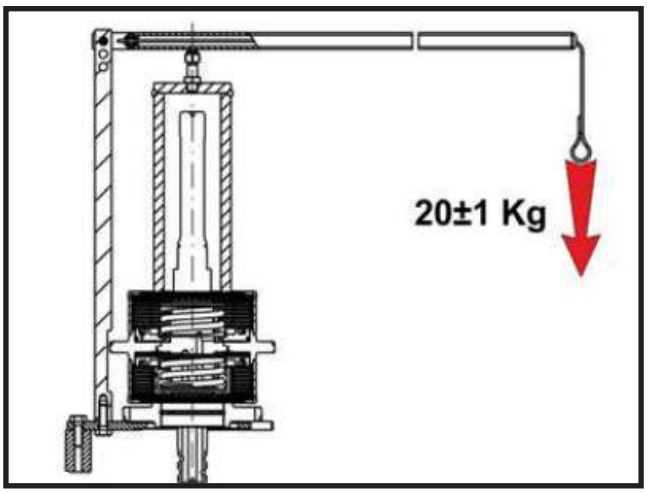

FIGURE 12: In this way, using the indicated equipment, a load F= 2200±50 N is applied to the false thrust plate (**P**) in order to eliminate any backlash.

See: Special tools in Product data.

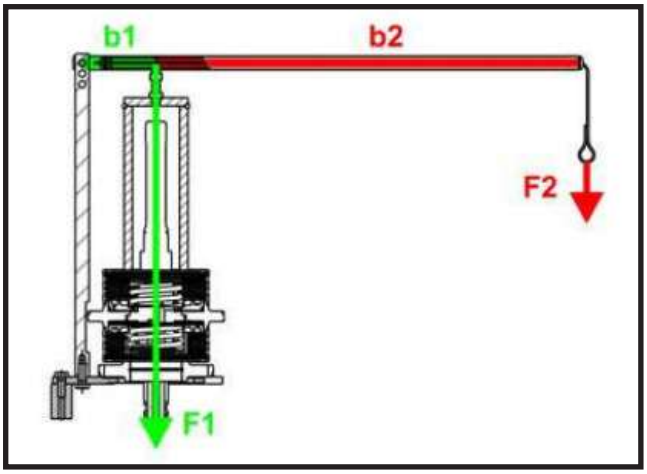

FIGURE 13: Using the equipment supplied by Carraro the amplification of the load is 11 times the load applied to the hook.

See: Special tools in Product data.

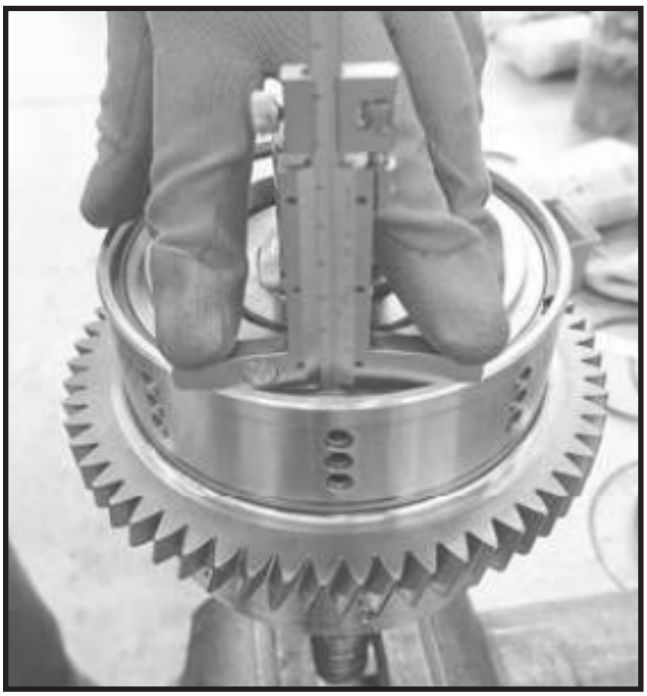

FIGURE 14: Measure the reference value (**X**) with a depth gauge or a comparator, under load.

See: next figure.

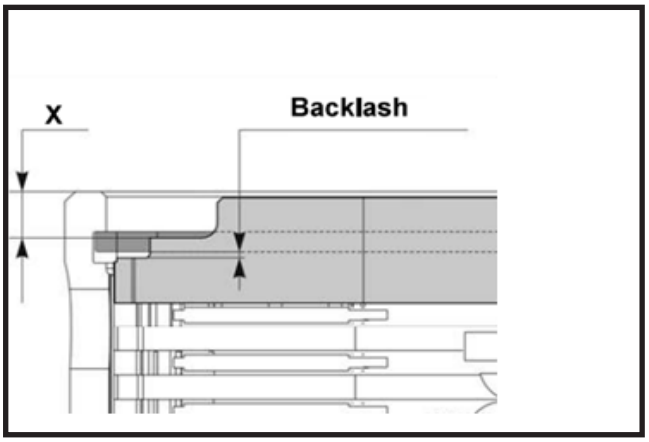

FIGURE 15: Measure the reference value (**X**) as shown.

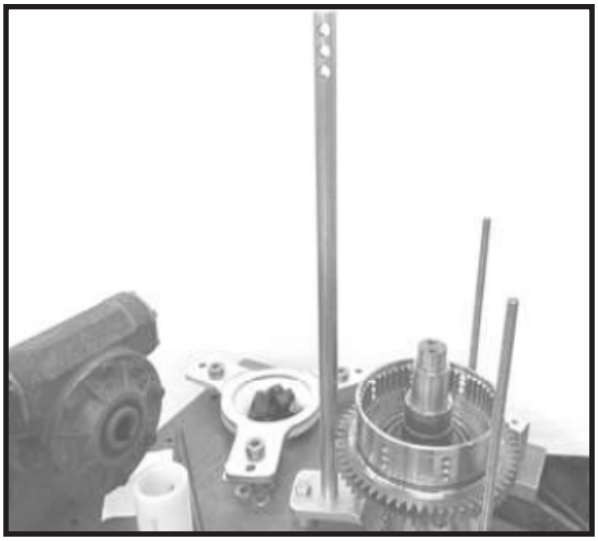

FIGURE 16: Remove the preload special equipment.

See: Special tools in Product data.

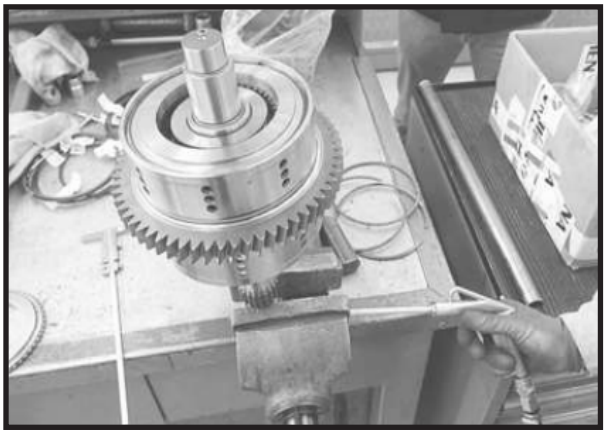

FIGURE 17: Feed the cluth piston chamber with compressed air at 87 psi (6 bar) to push clutch discs against the false thrust plate (**P**).

WARNING

It is possible violent expulsion of metal parts; use robust shelters and do not expose the body in the area of possible projection.

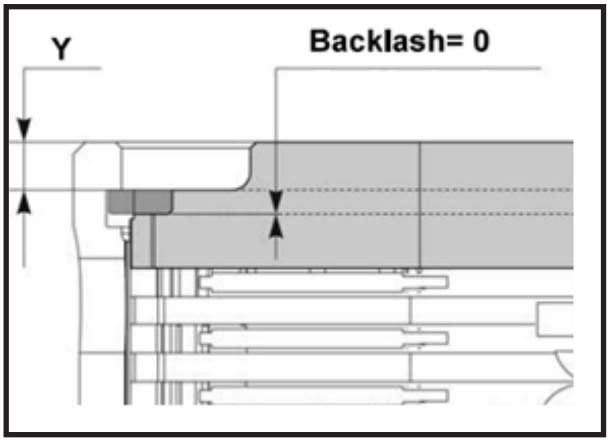

FIGURE 18: Measure the reference value (**Y**) as shown. Calculate necessary thickness value S to ensure the prescribed backlash: S= (X-Y+S0)-B [mm]

Where B is the prescribed backlash.

See: main drawing of the clutch shaft.

FIGURE 19: Remove retaining ring.

FIGURE 20: Remove the false thrust plate and assemble the correct one for the new clutch.

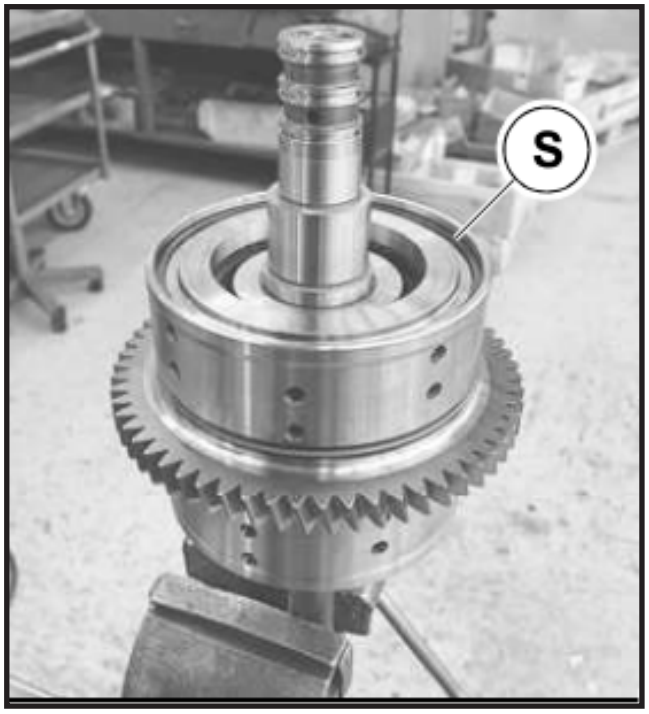

FIGURE 21: Assemble the snap ring of thickness S in the AVAILABLE SNAP RINGS RANGE.

FIGURE 22: Measure the dimensions (**X**) and (**Y**) as described above and verify that the difference comply with the prescribed backlash.

B= X-Y [mm]

See: prescribed backlash in main drawing of the clutch shaft.

Shafts Disassembly

FIGURE 1: Important: Never remove metal plugs and rivets; often these elements require special equipment for mounting and for the leak test required after completing the assembly operation.

FIGURE 2: Remove only parts that must be replaced or overhauling. It is recommended to replace all the sealing rings (even the O-Rings) that are removed, in order to guarantee their full efficiency.

FIGURE 3: Remove the gear/bearing groups with proper extractors; do not use improvised systems that could damage the transmission parts.

FIGURE 4: Remove the gears/wheels by pulling out of the shaft according to the axis (with proper extractors); do not apply off-axis efforts.

FIGURE 5: The locking thrust plate must be removed by using methods that do not involve danger for the operator.

FIGURE 6: Take all the necessary safety guards in case of compressed air use.

WARNING

It is possible violent expulsion of metal parts; use robust shelters and do not expose the body in the area of possible projection.

FIGURE 7: It's advisable unlock the clutch thrust plate by tapping with a plastic mallet.

FIGURE 8: Remove any gears or bearings over the clutch, before using the equipment (in the next figure) to compress the clutch plates or relative spring.

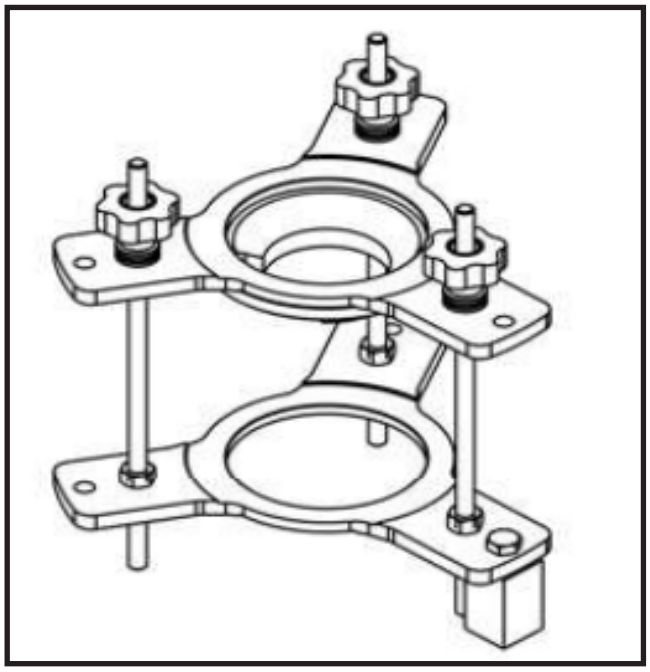

FIGURE 9: In figure the equipment to compress the clutch plates or relative spring.

See: Special tools in Product Data.

FIGURE 10: Note: To remove gears or bearings, use levers if it is not possible to use a puller.

Bearing Disassembly From Clutch Shaft FH-K3 – Axis B

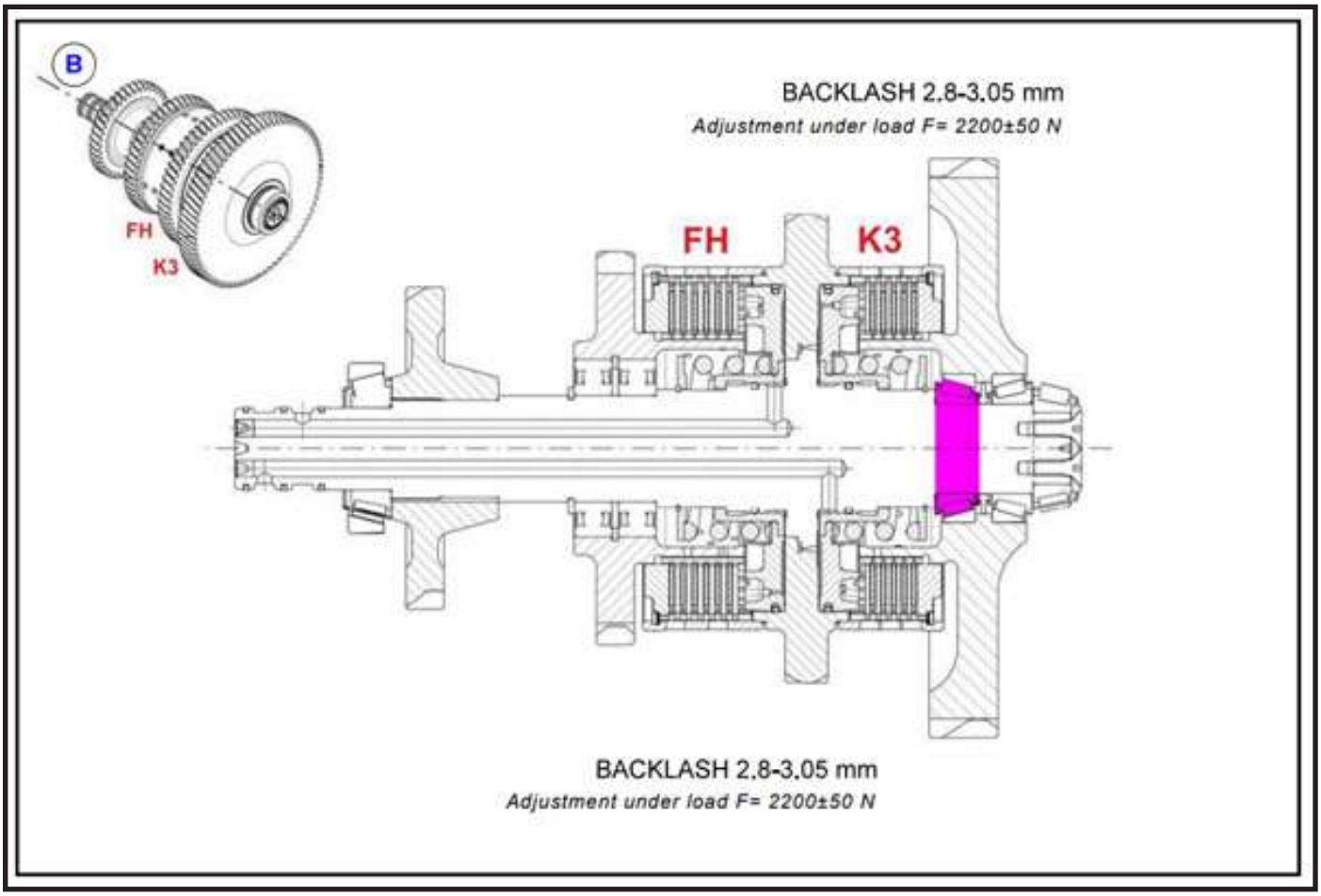

FIGURE 1: Remove the thrust washer fixing screws.

FIGURE 2: Remove the thrust washer.

FIGURE 3: Remove the shown bearing cone.

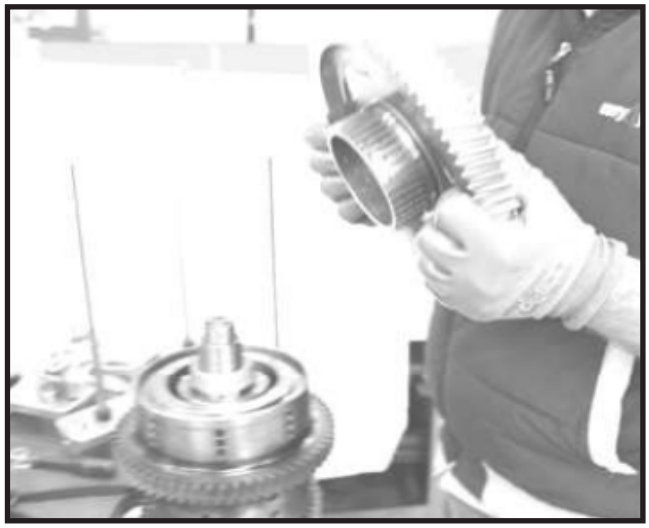

FIGURE 4: Remove the gear with relative bearing parts.

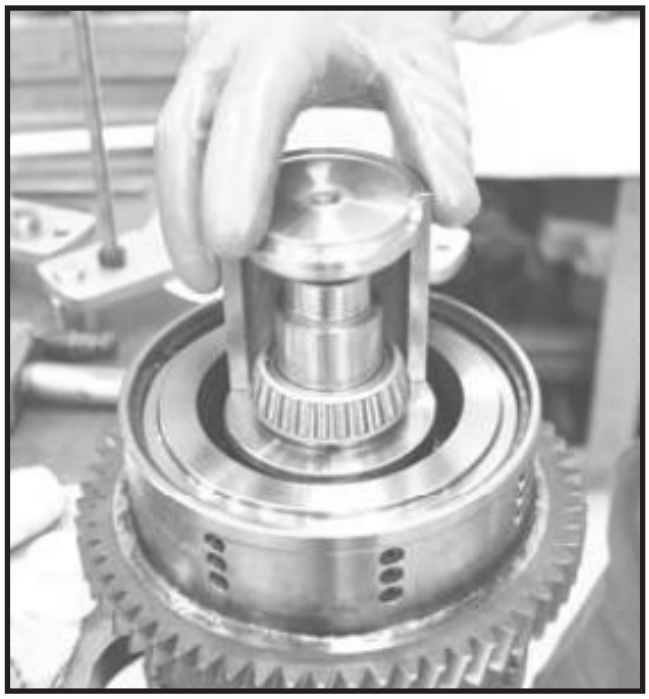

FIGURE 5: Assemble the indicated special tool, as shown. **See**: Special tools in Product Data.

FIGURE 6: Assemble the second half of special tool, as shown.

See: Special tools in Product Data.

FIGURE 7: Assemble the special tool bush, as shown.

See: Special tools in Product Data.

FIGURE 8: Assemble the bolt and screw until the bearing cone is completely removed.

See: Special tools in Product Data.

FIGURE 9: To collect the bearing, remove the bushing and open the special tool, as shown.

Service Operations Time

The times indicated are referred to medium values times of operations made by trained personnel in laboratory provided with all necessary tools for the good execution of the requested operations.

Reparation and/or substitution times are indicated in minutes.

It is assumed that the transmission has already been removed from the vehicle.

Oil Filling Operations Time

Min.		Operation
	10	Oil topping up
	15	Oil replacement

Torque Converter Group

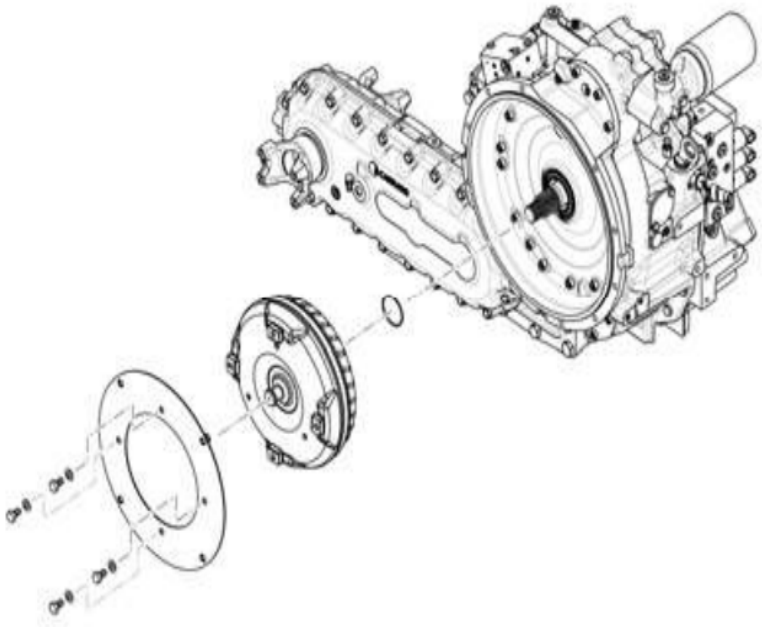

Min.	Operation
30	Group overhauling/re-placement

Transfer Box TB427

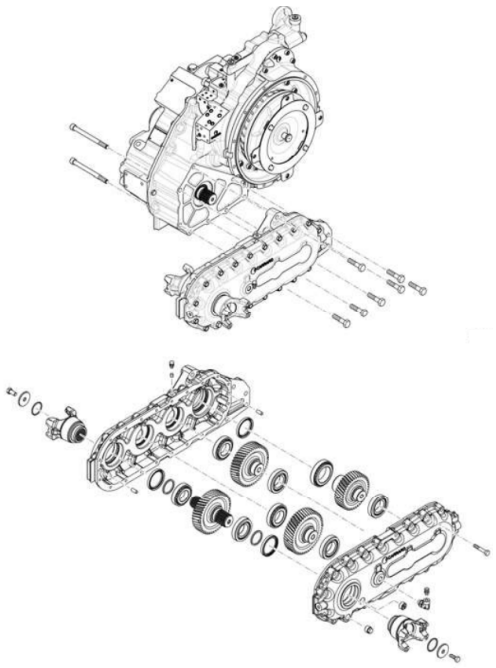

Min.	Operation
90	TB427 overhauling/ replacement

Transfer Box TB427

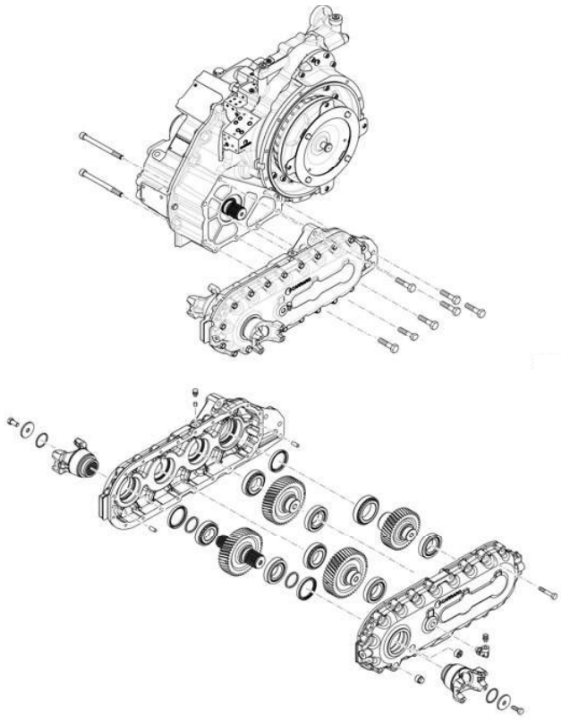

Min.	Operation
90	TB427 over-hauling/re-placement

Sensors and Valves Group

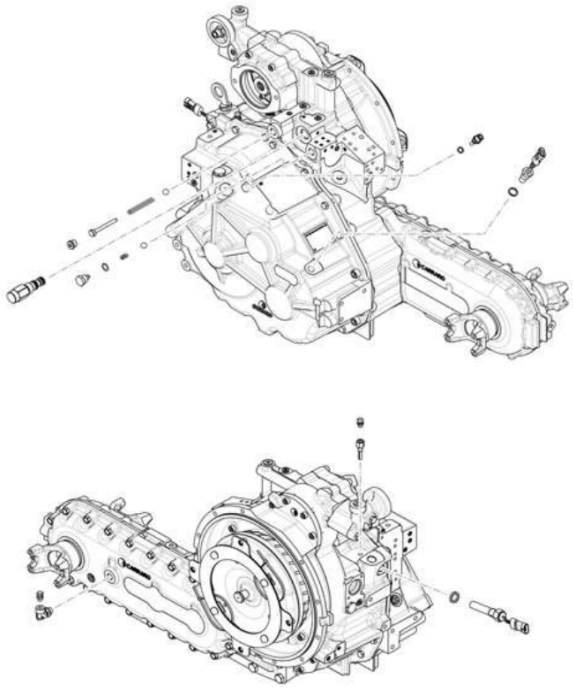

Min.	Operation
40	Sensors and valves replace-ment

Hydraulic Control Valve Blocks Group

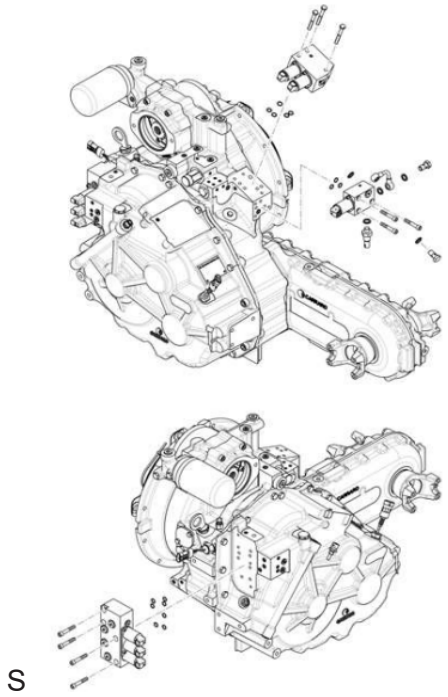

S

Min.	Operation
50	Control valve blocks replacement

Oil Pump Group

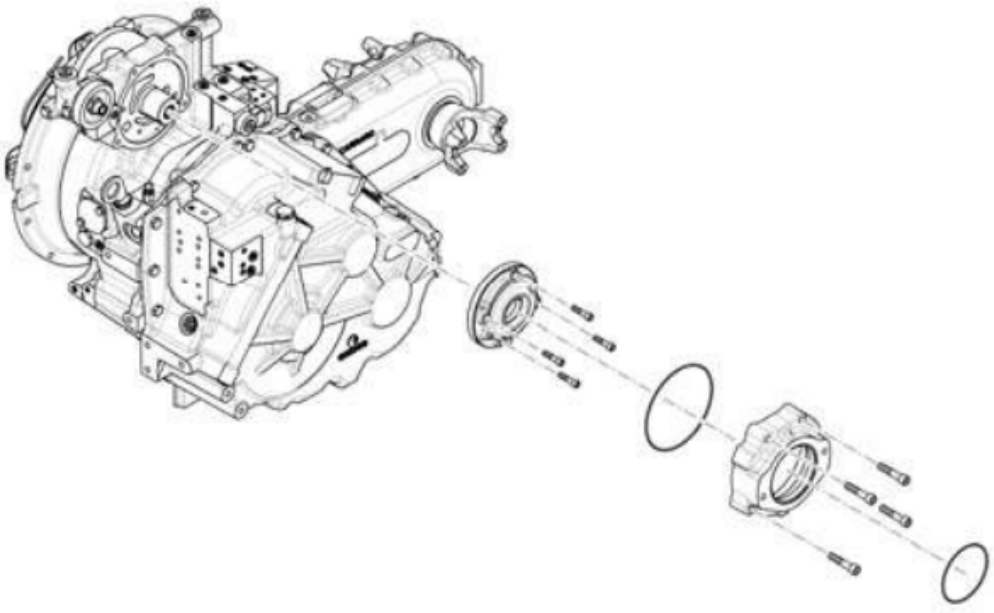

Min.	Operation
50	Oil pump overhauling/replacement

Front Housing Group

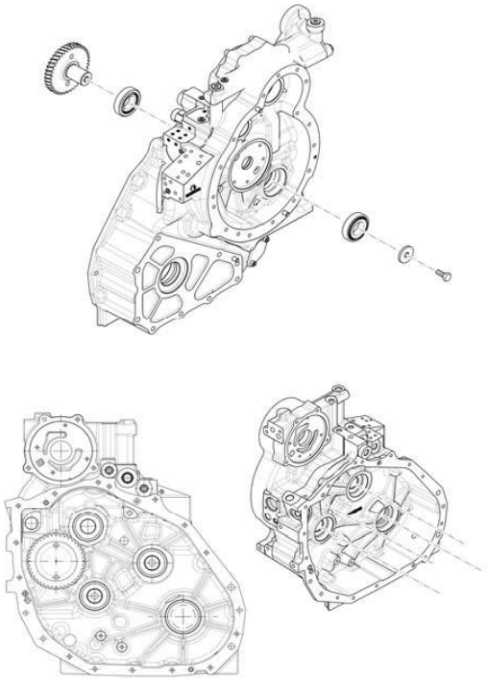

Min.	Operation
200	Group replacement

Transmission Housing Group

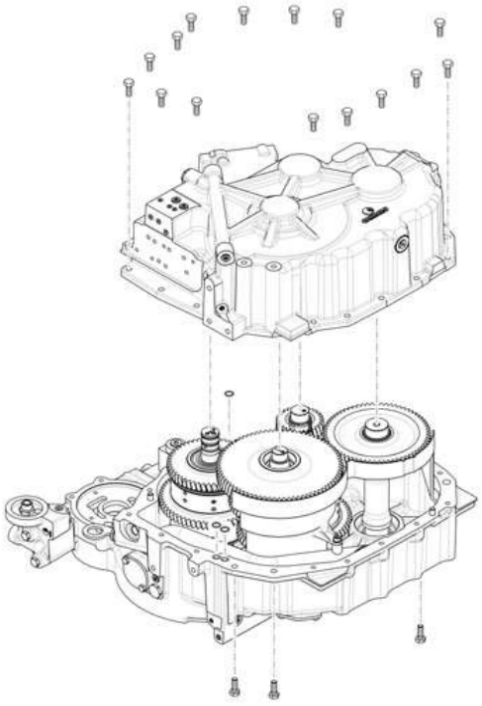

Min.	Operation
90	Group overhauling/replacement

Shafts Group

	Min.	Operation
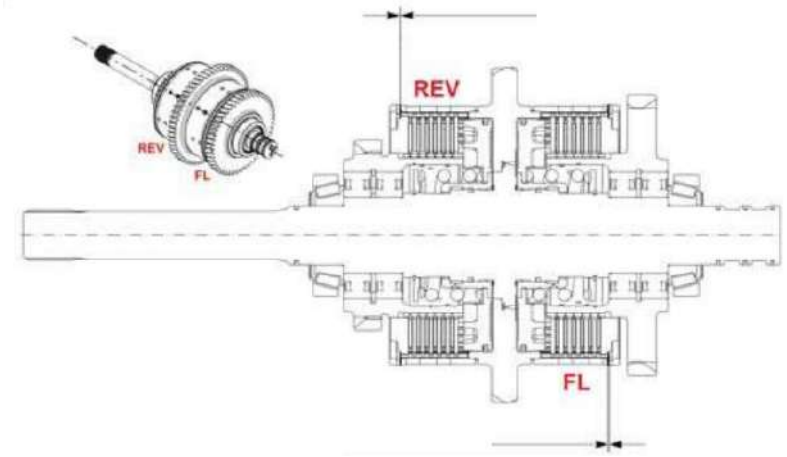	90*	Input shaft [Axis A] replacement
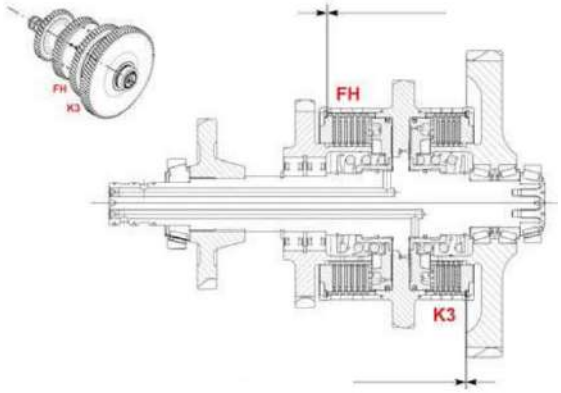	90*	Clutch shaft (FH-K3) [Axis B] replacement
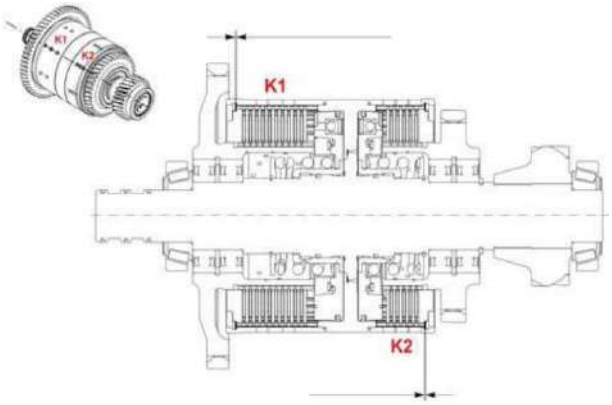	90*	Clutch shaft (K1-K2) [Axis C] replacement
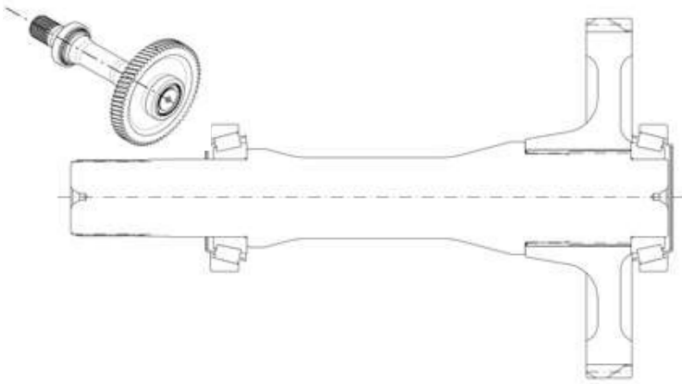	20*	Output shaft [Axis D] replacement
	+90	(*) At the time spent replacing one or more shafts, the transmission box disassembly and assembly time must be added

3.1 General

The documentation of the workshop manual has been created based on the engine available at the time of going to press.
There may be deviations in the descriptions, illustrations and parts due to further developments.

The valid documentations published by DEUTZ AG (for example Technical Circulars, Service Bulletins, etc.) must be observed.

The maintenance work described in the operation manual and in the workshop manual must be carried out on schedule and completely. The maintenance personnel must have the necessary technical knowledge to perform the work. Safety and protection devices which are removed during maintenance work must be replaced again afterwards.

Caution!

The rules for the prevention of accidents and the safety regulations must be observed during maintenance work.

Reference is made in the workshop manual job cards to the regulations in chapter 3.2. These must be read before working on the engine and must be strictly followed.

The maintenance intervals and the work to be performed are specified in the maintenance schedule of the operation manual. The job cards contain technical documentation on the execution of maintenance work.

3.2 Specifications

3.2.1 Accident prevention and safety regulations

The legally prescribed rules for the prevention of accidents must be observed. These are available from professional associations or from dealers. These are dependent on the application site, operating mode and the operating and auxiliary materials being used.

Special protection measures are specified depending on the work being carried out, and are identified in the job description.

Among other things it generally applies that:

- for the personnel:
  - Only briefed personnel may operate or maintain the engine. Unauthorised persons are prohibited access to the machine room.
  - Wear close-fitting clothing and ear protectors in the machine room when the engine is in operation.
  - Only deploy trained personnel to do repairs and maintenance work.
  - Do not work on the fuel system when the engine is running. The fuel system is under high pressure - danger of death.
  - Go to the workshop immediately in case of leaks in the fuel system.
- for the engine room:
  - Ensure adequate ventilation (do not cover air shafts).
  - Provide first aid kit and suitable fire extinguishers. Check the filling and readiness for operation regularly.
  - Only store inflammable materials in the machine room if they are essential for operation of the system.
  - Smoking and naked flames are prohibited in the machine room.
- for operation, maintenance and repairs on the engine:
  - The common rail systems used work with operating pressures up to approximately 2000 bar. In the case of potential faults, the pressure can even rise to significantly higher values before the pressure reducing valve opens.
  - Ignition must be switched off.
  - Do not start engine.
  - Depending on version of the common rail system, the electrical fuel supply pump is activated when the ignition is switched or during starting and supplies the fuel directly.

- After shutting down the engine, wait at least 30 seconds before performing work on the fuel system.
  Depending on the version of common rail system, the fuel pressure in the common rail system will still not have dissipated after 30 seconds. The fuel pressure can permanently be several 100 bar.
  The fuel pressure here does not drop until the fuel system is opened and the fuel can escape.
- Only start the engine when all the protective devices have been fitted. Make sure no-one is standing in the danger area.
- Cleaning, maintenance and repair work may only be performed with the engine at a standstill and secured against starting.
- Fuel lines, injection lines or fuel high-pressure lines must never be disconnected when the engine is running.
- Danger of injury !
  The fuel jet can deeply penetrate the skin.
- Do not come close to the leakage area in the fuel high-pressure system with any body parts (for example hand).
- Always carry out an exact visual inspection of all high-pressure carrying components before tests on the running engine. Wear suitable protective clothing (for example goggles, gloves) for this. Leakages entail potential hazard sources for the workshop personnel.
- Even if no leakages can be discerned in the fuel high-pressure system, the workshop personnel should avoid the direct hazard zone or wear protective clothing (for example goggles, gloves) during tests when the engine is running and during the first test run.
- Always stay out of range of a fuel jet, as it could cause severe injury.
- Fuel lines, injection lines and high-pressure lines must not be deformed.
- Damaged fuel lines, injection lines and high-pressure lines must be replaced.
- Smoking is strictly prohibited when working on the fuel system.
- Do not work near to sparks and flames.
- Never disconnect an injector when the engine is running.
- Loosen screw connections slowly and not abruptly
- Open screw connections on the fuel system with extreme caution.
- After all work on the fuel system, it must be bleeded - see the operation manual, chapter "6 Fuel system“.

3.2.2 Cleanliness instructions and measures for working with common rail systems

The common rail systems used in DEUTZ engines comprise high-precision components subjected to extreme loads. In view of the high-precision technology, ensure utmost cleanliness when working on the fuel system.

Notes and measures to be observed before starting work on the fuel system

- The fuel system must be closed. Make a visual inspection for leaks / damage to the fuel system.
- Clean the whole engine and engine room with the system closed before starting work on the fuel system.
- The engine must be dry when you start working on the fuel system.
- Blowing (dry) with compressed air is only permissible with the fuel system closed.
- When using a steam jet, first cover up the control unit, the cable plugs, all other electrical plug connections and the generator. Also, the steam jet may not be pointed directly at them.
- Electrical plug connections must be plugged when spraying.
- Remove loose parts (for example paint chips from assembly work) with an industrial vacuum cleaner or other suction device. Only suction may be used in assembly work on the open fuel system.
- Only work on the fuel system in a clean environment (no dust, no grinding or welding). Avoid draughts (dust). Clean the workshop floor regularly. No brake or performance test benches may be kept or operated in the same room.
- Air currents which kick up dust, such as those caused by brake repairs or the starting of engines, should be avoided.
- For work such as removal and installation on defective hydraulic components on the Common Rail System it is recommended to partition off a separate workshop area in the factory. This must be separate from other areas in which general vehicle repairs such as brake repairs are carried out.
- No general machine tools may be operated in this room.
- Regular cleaning of the workshop area is mandatory. Draughts, ventilation systems and heating fans should be minimised.
- Areas of the engine room from which particles of dirt could be loosened (for example the bottom part of the tipped driver cab) must be covered with fresh clean film.

- Working materials and tools must be cleaned before work. Only use tools without damage to the chrome plating or tools which are not chrome-plated.

Notes and measures to be observed during work on the fuel system or with the fuel system open.

- Only work in clean overalls.
- Only lint-free cleaning cloths may be used for work on the fuel system.
- Remove loose parts (for example paint chips from assembly work) with an industrial vacuum cleaner or other suction device. Only suction may be used in assembly work on the open fuel system.
- Working materials and tools must be cleaned before work. Only use tools without damage to the chrome plating or tools which are not chrome-plated.
- Do not use used cleaning fluid or test fluid for cleaning.
- Compressed air must not be used for cleaning on the open fuel system.
- Work on removed components may only be performed at a suitably equipped workbench.
- When removing and installing components, no materials which can leave behind particles or fibres (cardboard, wood, cloths) may be used.
- Removed parts may only be rubbed down with clean, lint-free cloths. No dirt particles may be rubbed into the components.
- Openings on the components and on the engine must be closed immediately with suitable stoppers/caps.
- The stoppers/caps may only be removed immediately before installing.
- Store stoppers/caps free from dust and dirt in the original packaging and dispose of after using once.
- Only remove new parts from the original packaging just before installation.
- Removed components must be kept in new, sealable bags or - if available - in the packaging of the new parts.
- Always use the original packaging of the new part to send back the removed components.

Notes and measures for the vehicle workshop area

- For work such as removal and installation on defective hydraulic components on the Common Rail System it is recommended to partition off a separate workshop area in the factory. This must be separate from other areas in which general vehicle repairs such as brake repairs are carried out.
- The workshop floor is sealed or tiled.
- No welding gear, grinders, general machine tools, brakes or performance test benches may be operated in this room.
- Regular cleaning of the workshop area is mandatory. Draughts, ventilation systems and heating fans should be minimised.

Notes and measures for workbench and tools in the vehicle hall

- A special workbench must be set up for work on removed components.
- Clean the removal and installation tools regularly and keep them in a closed tool cabinet.
- Remove loose parts (for example paint chips from assembly work) with an industrial vacuum cleaner or other suction device.
- Working materials and tools must be cleaned before work. Only use tools without damage to the chrome plating or tools which are not chrome-plated.

3.2.3 Additional information and measures for the handling of exhaust aftertreatment systems

- Basically all the same regulations and instructions up to and including chapter 3.2.2 must also be observed for work on exhaust aftertreatment systems!
- Utmost cleanliness must be observed for all work.

DPF (Diesel Particle Filter)

- The filter regeneration must be deactivated or, in systems with a filter regeneration prompt, not activated before performing service work.
- The duration of a full filter regeneration is 25 minutes on average. High exhaust temperatures occur in the exhaust system/on the end exhaust pipe independently of the actual load state of the engine (i.e. also during engine idling).
- No foreign bodies may get into the exhaust line or the combustion chamber. If this happens, the engine must be "run free" without diesel particle filter.
- Tensions and deformations of the shape of the V-belt clip must be avoided. The DPF module may only be transported using the transport sleeves.
- V-belt clips and seals may not be reused (this also applies as soon as the screw connection has been loosened once).

Ignition system

- Caution! Dangerous high voltage.
  The ignition system operates with ignition voltages up to 10000 Volts.

- The ignition system must not be operated without a secondary load.
- Store the components in a dry and clean area.
- It is not permitted to: store the components temporarily or stack them without their transport packaging.
- Components may only be stored and transported in the specified packaging.
- Only remove new parts from the original packaging just before installation.
- Incorrectly operated or damaged components or parts that have been dropped must not be installed.
- Do not subject the components to any hard impacts or any other use of force.
- Faulty earthing, cable and plug connections can lead to malfunctions. Electronic components can be destroyed.
- Dirt and moisture on the primary and high voltage connections can cause malfunctions (leakage current, misfiring, high voltage sparks).
- Check the protective caps of the ignition lines for discolouration, deformation and cracks before each usage.

SCR (Selective Catalytic Reduction)

- AdBlue® is a caustic medium which causes heavy corrosion damage when it comes into contact with electronic components or similar.
- Leaks on the AdBlue® pipes, the tank, the supply module and the feeding unit must be fixed immediately to avoid leakage of AdBlue®.
- Make sure the room is well ventilated.
- Contact with the skin should be avoided. Wear latex gloves if possible.
- Wash hands thoroughly before taking breaks and at the end of shifts.
- If the substance comes into contact with eyes, rinse thoroughly with water.
- If swallowed, rinse out mouth with a lot of water, drink plenty of water and seek medical advice.
- If discomfort or illness continues, seek medical advice.
- Product can pose danger of slipping if spilled. It is essential to remove spilled liquid. In so doing, ensure that the liquid does not enter the sewage system or ground/surface water. This means that the contamination should be physically removed and disposed of in suitable containers. Minimal amounts of remaining liquid may be rinsed away with a lot of water.
- The so-called lag time is application-dependent and may be up to 2 minutes in engines with an SCR system because the SCR pipes have to be pumped empty in this time.

3.2.4 Disposal regulations

The work described in the operation manual and workshop manual necessitates renewal of parts and operating materials among other things. The renewed parts / operating materials must be stored, transported and disposed of according to regulations. The owner himself is responsible for this.

Disposal includes recycling and the scrapping of parts / operating materials, although recycling has priority.

Details of disposal and their monitoring are governed by regional, national and international laws and directives which the system operator must observe on his own responsibility.

3.3 Operation manual and workshop manual

In order to structure the information layout in a user-friendly way, the service documentation is divided into operating instructions and job cards (workshop manual).

The operation manual contains a general description and instructions for all other maintenance work.

It contains the following chapters:

1. Contents, General
2. Engine description
3. Operation
4. Operating media
5. Maintenance
6. Care and maintenance work
7. Faults, causes and remedies
8. Engine conservation
9. Technical data
10. Service

The use of job cards (workshop manual) presupposes knowledge of the operating instructions content, this applying in particular for the service specifications. Repairs to the engine and components are described in the job cards (workshop manual), for the implementation of which more effort and correspondingly qualified experts are required.

3.4 Job cards

The job cards are differentiated into "W" and "I" job cards.
The "W" job card documents the standard repairs to the engine and/or its components. The necessary tools and special tools are also indicated in the "W" job card.
The "I" job card also documents corresponding workflows for repairing the engine and/or its components. Special prerequisites must be fulfilled by the workshops for implementation of these workflows. For example, special tools and machine tools must be available.

3.4.1 Numbering of job cards

The job card numbering uses the format **W 08-03-01**. The individual parts of this format are explained below:

- **W** 08-03-01: Documentation type
  - **W**.... Workshop manual
  - I ..... Repair manual
- W **08**-03-01: Module
  according to module list
- W 08-**03**-01: Component group
- W 08-03-**01**: Consecutive number

3.4.2 Structure of a job card

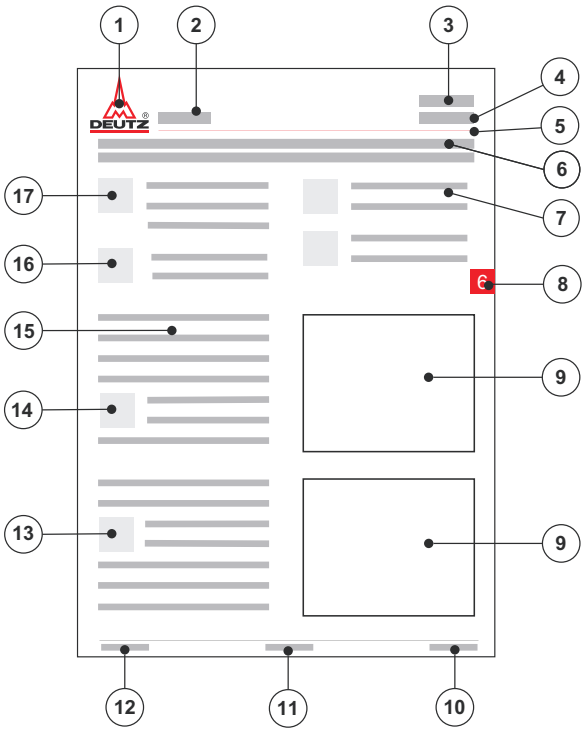

1. DEUTZ AG,
   publisher of service documentation
2. Number of associated spare parts list sheet (ETL)
3. Assembly - Designation
4. Numbering of the job cards
5. DEUTZ internal creation number
6. Title of job card
7. References / Notes
8. Chapter
9. Graphic or photo
10. DEUTZ internal designation
11. Page number
12. Date of issue of job card
13. Note
14. Danger / Important
15. Parts list / Workflow
16. Auxiliary materials
17. Conventional tools, special tools

3.5 Explanation of symbols

Danger!
of death or to health. Must be observed!
For example: The incorrect use or conversion of the turbocharger can lead to serious injury.

Caution!
Danger to the component/engine. Non-compliance can lead to destruction of the component/engine.
Must be observed!

Note
General notes on assembly, environmental protection etc. No potential danger for man or machine.

Tool
Conventional and special tools required for the work.

Auxiliary materials
Working materials required in addition to the tools for performing the work
(e.g. greases, oils, adhesives, sealants)

References
to important documents

Reference
within the workflow or to assemblies in which further documents or job cards are provided.

Test and setting data
The necessary values are indicated here with link to a table within the job card.

Tightening specifications
The necessary values are indicated here with link to a table within the job card.

5 Job card overview

5.1 Sorted alphabetically

Activity	Job card	Maintenance group
Charge air line	W 22-90-55	Charge air line
Charge air manifold	W 22-90-54	Charge air line
Checking the thermostat (in the removed state)	W 38-01-02	Thermostat housing
Closing parts	W 02-90-01	Lubricating oil sump
Closing parts	W 01-90-01	Crankcase
Compensator structure (assembly material)	W 71-90-21	Exhaust gas treatment
Compensator structure (Exhaust line)	W 41-90-21	Exhaust pipe
Connection (Crankcase housing, exhaust gas circulation, coolant line)	W 41-90-04	Exhaust gas recirculation
Connection housing	W 52-90-53	Connection housing
Console	W 71-90-51	Exhaust gas treatment
Control valve	W 09-90-63	Gearcase
Drain valve	W 02-90-04	Lubricating oil sump
Drive components	W 37-90-06	Coolant pump
Engine mounting	W 46-90-15	Engine mounting
Engine mounting	W 46-90-15	Engine mounting
Engine mounting	W 46-90-15	Engine mounting
Engine mounting	W 46-90-15	Engine mounting
Exhaust manifold (exhaust turbocharger)	W 43-90-36	Exhaust gas turbocharger
Fastening parts	W 82-90-05	Coolant compressor
Fastening parts	W 48-90-05	Cable harness
Fastening parts	W 20-90-05	Fuel filter
Fuel filter	W 20-90-17	Fuel filter
Fuel line	W 20-90-30	Fuel pipes
Fuel pre-filter	W 20-90-16	Fuel filter
Generator	W 44-90-42	Parts to generator
Holder	W 71-90-09	Exhaust gas treatment
Holder	W 41-90-09	Exhaust pipe
Holder	W 41-90-09	Exhaust pipe
Holder (Relay)	W 48-90-09	Electrical equipment
Impulse transmitter (camshaft)	W 51-90-20	Measuring instruments
Impulse transmitter (crankshaft)	W 51-90-20	Measuring instruments
Inlet module	W 71-90-48	Exhaust gas treatment
Intake nozzle (exhaust turbocharger)	W 22-90-35	Air intake pipe
Line	W 38-90-32	Coolant pipes
Line	W 01-90-32	Crankcase breather

Activity	Job card	Maintenance group
Line (Crankcase housing, exhaust gas circulation, coolant line)	W 41-90-32	Exhaust gas recirculation
Line (Thermostat housing, exhaust gas circulation, coolant line)	W 41-90-32	Exhaust gas recirculation
Line (Thermostat housing, lubricating oil cooler, coolant line)	W 38-90-32	Coolant pipes
Lubricant oil filter console	W 15-90-38	Lubricating oil filter
Lubricating oil line	W 16-90-32	Lubricating oil pipe
Oil filling	W 02-90-24	Lubricating oil sump
Oil measuring device	W 01-90-23	Oil measuring device
Outlet module	W 71-90-49	Exhaust gas treatment
Pressure fan	W 39-90-52	Fan
Pressure transmitter / temperature pressure transmitter (charge air)	W 22-90-20	Charge air line
Pressure transmitter installation (oil pressure)	W 51-90-20	Measuring instruments
Removing and install the charge air line	W 22-01-01	Charge air line
Removing and installing charge air manifold	W 22-04-01	Charge air line
Removing and installing hydraulic pump drive	W 83-02-01	Hydraulic pump drive
Removing and installing the belt tensioner (V-rib belt, level 1)	W 44-01-01	Add-on parts
Removing and installing the connection housing	W 52-01-01	Connection housing
Removing and installing the connection housing	W 52-01-01	Connection housing
Removing and installing the console (V-rib belt, level 1)	W 44-02-06	Add-on parts
Removing and installing the coolant compressor	W 82-01-01	Coolant compressor
Removing and installing the coolant pump	W 37-03-01	Coolant pump
Removing and installing the cooler	W 41-05-02	Exhaust gas recirculation
Removing and installing the cylinder head cover	W 08-01-01	Cylinder head cover
Removing and installing the exhaust gas return valve	W 41-05-03	Exhaust gas recirculation
Removing and installing the exhaust line	W 41-01-01	Exhaust pipe
Removing and installing the flutter valve	W 41-05-01	Exhaust gas recirculation
Removing and installing the flywheel (Fastening parts)	W 05-03-01	Flywheel
Removing and installing the fuel line (injector, rail, high-pressure pump)	W 21-05-05	Fuel pipes
Removing and installing the gasket housing	W 01-03-01	Crankcase
Removing and installing the generator (Clamping latch)	W 44-02-01	Generator

Activity	Job card	Maintenance group
Removing and installing the generator (Fastening parts)	W 44-02-01	Generator
Removing and installing the glow plugs	W 63-02-01	Start aid
Removing and installing the high-pressure pump	W 17-01-04	High-pressure pump
Removing and installing the injector	W 19-01-01	Injector
Removing and installing the lubricating oil cooler	W 15-02-01	Lubricating oil cooler
Removing and installing the lubricating oil line (exhaust turbocharger)	W 16-04-01	Lubricating oil pipe
Removing and installing the lubricating oil pan	W 02-01-01	Lubricating oil sump
Removing and installing the lubricating oil return line (exhaust turbocharger)	W 16-05-01	Lubricating oil pipe
Removing and installing the oil suction pipe	W 16-01-01	Oil suction pipe
Removing and installing the pressure/temperature sensor (charge air)	W 48-03-01	Electrical equipment
Removing and installing the rail	W 21-04-01	Fuel pipes
Removing and installing the sensor wheel	W 05-07-01	V-belt pulley add-on
Removing and installing the starter	W 44-03-01	Starter
Removing and installing the thermostat	W 38-01-01	Thermostat housing
Removing and installing the transfer line	W 01-07-05	Crankcase
Removing and installing the turbocharger	W 43-01-01	Exhaust gas turbocharger
Removing and installing the V-belt pulley / V-ribbed pulley	W 05-01-01	Crankshaft
Removing and installing turning gear / locking device	W 49-02-01	Tools
Renewing the crankshaft sealing ring (flywheel side)	W 01-02-01	Crankcase
Renewing the crankshaft sealing ring (opposite side to flywheel)	W 09-01-01	Gearcase
Screw plug (Thermostat housing, exhaust gas circulation, coolant line)	W 41-90-04	Exhaust gas recirculation
Supply pump (Fuel)	W 20-90-47	Fuel supply pump
V-belt pulley	W 05-90-13	V-belt pulley add-on
V-rib belt pulley	W 37-90-13	Coolant pump

5.2 Sorted numerically

Job card	Activity	Maintenance group
W 01-02-01	Renewing the crankshaft sealing ring (flywheel side)	Crankcase
W 01-03-01	Removing and installing the gasket housing	Crankcase
W 01-07-05	Removing and installing the transfer line	Crankcase
W 01-90-01	Closing parts	Crankcase
W 01-90-23	Oil measuring device	Oil measuring device
W 01-90-32	Line	Crankcase breather
W 02-01-01	Removing and installing the lubricating oil pan	Lubricating oil sump
W 02-90-01	Closing parts	Lubricating oil sump
W 02-90-04	Drain valve	Lubricating oil sump
W 02-90-24	Oil filling	Lubricating oil sump
W 05-01-01	Removing and installing the V-belt pulley / V-ribbed pulley	Crankshaft
W 05-03-01	Removing and installing the flywheel (Fastening parts)	Flywheel
W 05-07-01	Removing and installing the sensor wheel	V-belt pulley add-on
W 05-90-13	V-belt pulley	V-belt pulley add-on
W 08-01-01	Removing and installing the cylinder head cover	Cylinder head cover
W 09-01-01	Renewing the crankshaft sealing ring (opposite side to flywheel)	Gearcase
W 09-90-63	Control valve	Gearcase
W 15-02-01	Removing and installing the lubricating oil cooler	Lubricating oil cooler
W 15-90-38	Lubricant oil filter console	Lubricating oil filter
W 16-01-01	Removing and installing the oil suction pipe	Oil suction pipe
W 16-04-01	Removing and installing the lubricating oil line (exhaust turbocharger)	Lubricating oil pipe
W 16-05-01	Removing and installing the lubricating oil return line (exhaust turbocharger)	Lubricating oil pipe
W 16-90-32	Lubricating oil line	Lubricating oil pipe
W 17-01-04	Removing and installing the high-pressure pump	High-pressure pump
W 19-01-01	Removing and installing the injector	Injector
W 20-90-05	Fastening parts	Fuel filter
W 20-90-16	Fuel pre-filter	Fuel filter
W 20-90-17	Fuel filter	Fuel filter
W 20-90-30	Fuel line	Fuel pipes
W 20-90-47	Supply pump (Fuel)	Fuel supply pump
W 21-04-01	Removing and installing the rail	Fuel pipes
W 21-05-05	Removing and installing the fuel line (injector, rail, high-pressure pump)	Fuel pipes

Job card	Activity	Maintenance group
W 22-01-01	Removing and install the charge air line	Charge air line
W 22-04-01	Removing and installing charge air manifold	Charge air line
W 22-90-20	Pressure transmitter / temperature pressure transmitter (charge air)	Charge air line
W 22-90-35	Intake nozzle (exhaust turbocharger)	Air intake pipe
W 22-90-54	Charge air manifold	Charge air line
W 22-90-55	Charge air line	Charge air line
W 37-03-01	Removing and installing the coolant pump	Coolant pump
W 37-90-06	Drive components	Coolant pump
W 37-90-13	V-rib belt pulley	Coolant pump
W 38-01-01	Removing and installing the thermostat	Thermostat housing
W 38-01-02	Checking the thermostat (in the removed state)	Thermostat housing
W 38-90-32	Line (Thermostat housing, lubricating oil cooler, coolant line)	Coolant pipes
W 38-90-32	Line	Coolant pipes
W 39-90-52	Pressure fan	Fan
W 41-01-01	Removing and installing the exhaust line	Exhaust pipe
W 41-05-01	Removing and installing the flutter valve	Exhaust gas recirculation
W 41-05-02	Removing and installing the cooler	Exhaust gas recirculation
W 41-05-03	Removing and installing the exhaust gas return valve	Exhaust gas recirculation
W 41-90-04	Screw plug (Thermostat housing, exhaust gas circulation, coolant line)	Exhaust gas recirculation
W 41-90-04	Connection (Crankcase housing, exhaust gas circulation, coolant line)	Exhaust gas recirculation
W 41-90-09	Holder	Exhaust pipe
W 41-90-09	Holder	Exhaust pipe
W 41-90-21	Compensator structure (Exhaust line)	Exhaust pipe
W 41-90-32	Line (Thermostat housing, exhaust gas circulation, coolant line)	Exhaust gas recirculation
W 41-90-32	Line (Crankcase housing, exhaust gas circulation, coolant line)	Exhaust gas recirculation
W 43-01-01	Removing and installing the turbocharger	Exhaust gas turbocharger
W 43-90-36	Exhaust manifold (exhaust turbocharger)	Exhaust gas turbocharger
W 44-01-01	Removing and installing the belt tensioner (V-rib belt, level 1)	Add-on parts
W 44-02-01	Removing and installing the generator (Fastening parts)	Generator

Job card	Activity	Maintenance group
W 44-02-01	Removing and installing the generator (Clamping latch)	Generator
W 44-02-06	Removing and installing the console (V-rib belt, level 1)	Add-on parts
W 44-03-01	Removing and installing the starter	Starter
W 44-90-42	Generator	Parts to generator
W 46-90-15	Engine mounting	Engine mounting
W 46-90-15	Engine mounting	Engine mounting
W 46-90-15	Engine mounting	Engine mounting
W 46-90-15	Engine mounting	Engine mounting
W 48-03-01	Removing and installing the pressure/temperature sensor (charge air)	Electrical equipment
W 48-90-05	Fastening parts	Cable harness
W 48-90-09	Holder (Relay)	Electrical equipment
W 49-02-01	Removing and installing turning gear / locking device	Tools
W 51-90-20	Pressure transmitter installation (oil pressure)	Measuring instruments
W 51-90-20	Impulse transmitter (camshaft)	Measuring instruments
W 51-90-20	Impulse transmitter (crankshaft)	Measuring instruments
W 52-01-01	Removing and installing the connection housing	Connection housing
W 52-01-01	Removing and installing the connection housing	Connection housing
W 52-90-53	Connection housing	Connection housing
W 63-02-01	Removing and installing the glow plugs	Start aid
W 71-90-09	Holder	Exhaust gas treatment
W 71-90-21	Compensator structure (assembly material)	Exhaust gas treatment
W 71-90-48	Inlet module	Exhaust gas treatment
W 71-90-49	Outlet module	Exhaust gas treatment
W 71-90-51	Console	Exhaust gas treatment
W 82-01-01	Removing and installing the coolant compressor	Coolant compressor
W 82-90-05	Fastening parts	Coolant compressor
W 83-02-01	Removing and installing hydraulic pump drive	Hydraulic pump drive

6 Job cards

Renewing the crankshaft sealing ring (flywheel side)

Standard tools

Special tools:

– Pricker	01899103
– Assembly lever	01899110
– Assembly tool	02992214

– Self-tapping screw
– Washer

Removing the crankshaft sealing ring

1 Gasket housing
2 Shaft sealing ring
3 Hexagon head screw
188 Packing compound

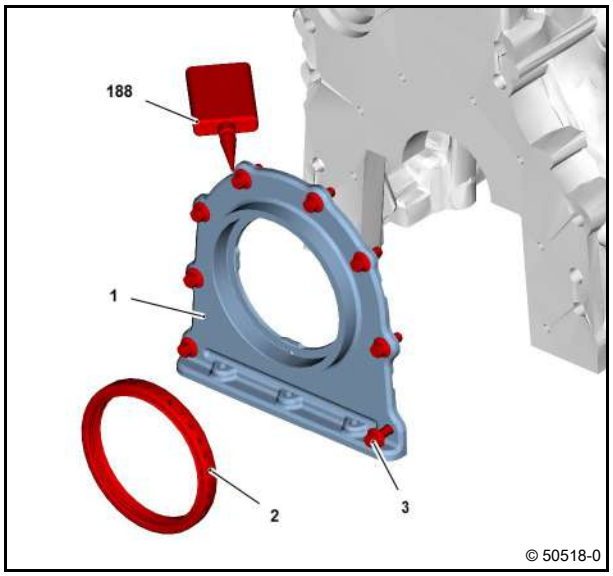

- Remove flywheel.

  Module 05

- Make a hole of approximately 3 mm in the crankshaft sealing ring with a pricker.

Attention!
Do not damage the gasket housing and crankshaft!

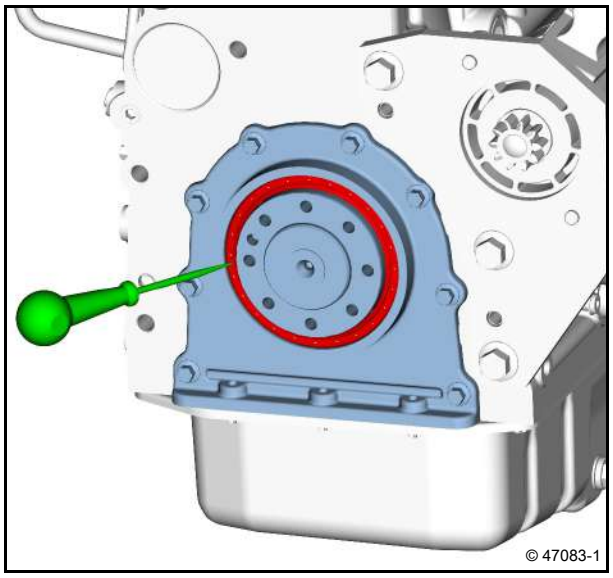

- Screw in a self-tapping screw (1) with washer.

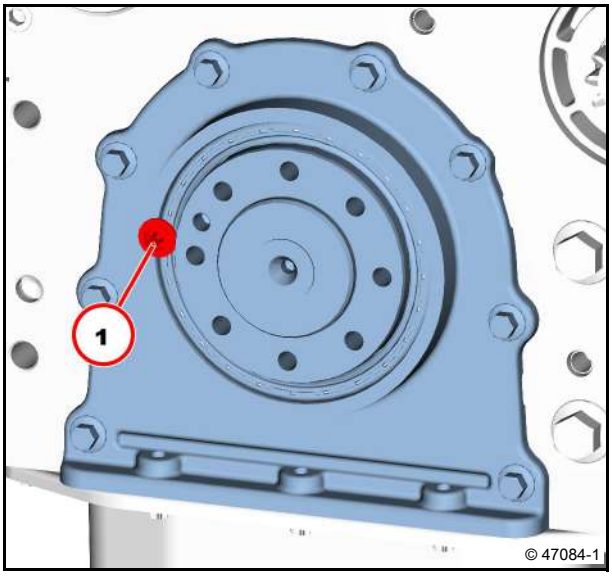

- Pull out the crankshaft sealing ring with assembly lever.

Ensure that the crankshaft does not get damaged.

- Visually inspect the crankshaft sealing ring running surface.

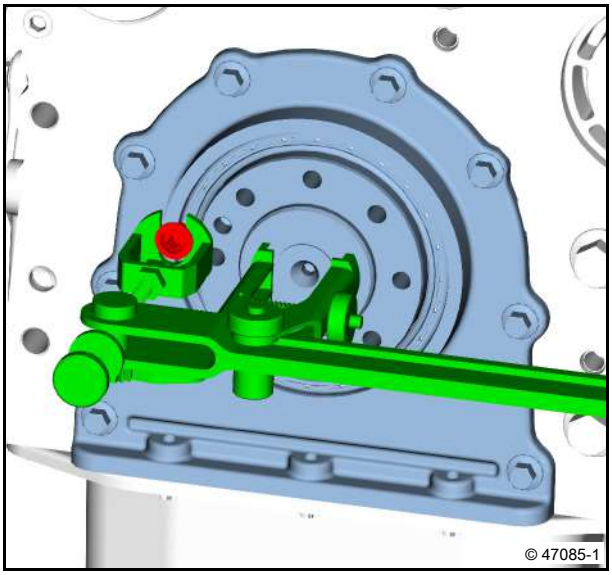

Installing the crankshaft sealing ring

- Mount guide sleeve (1).
- Tighten screws (2).

The bores in the guide sleeve must match the threaded holes in the crankshaft flange.

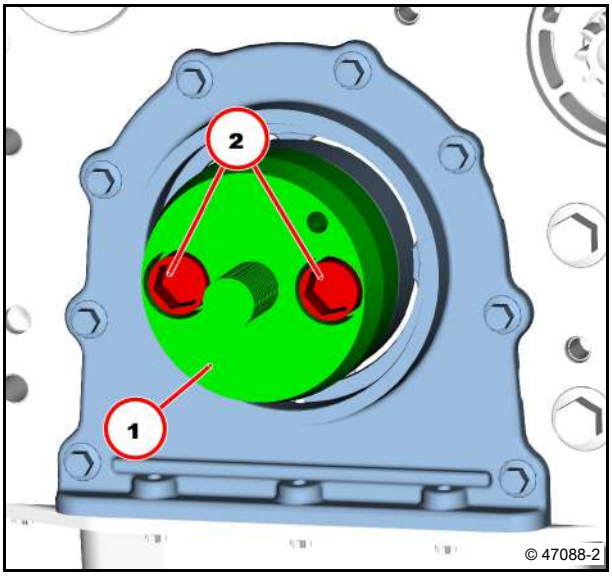

- Place the crankshaft sealing ring carefully on the peripheral surface.

Do not oil waxed crankshaft sealing rings.

The sealing lip faces the crankcase.

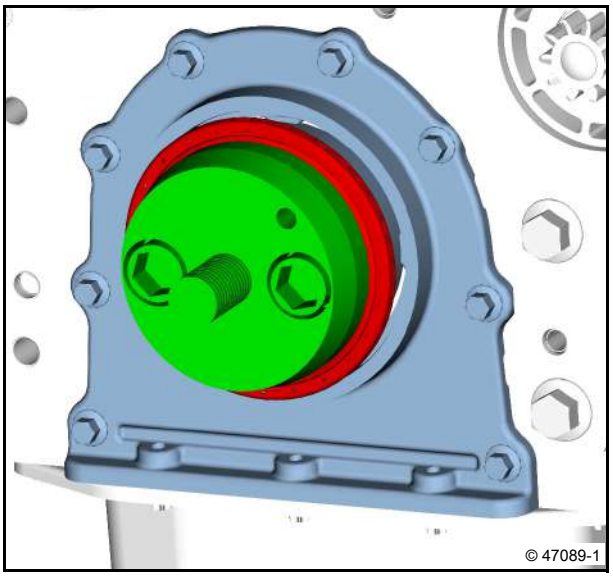

- Mount assembly sleeve (1).
- Press on the crankshaft sealing ring to the stop.
- Plug in the bearing (2).
- Screw on nut (3).

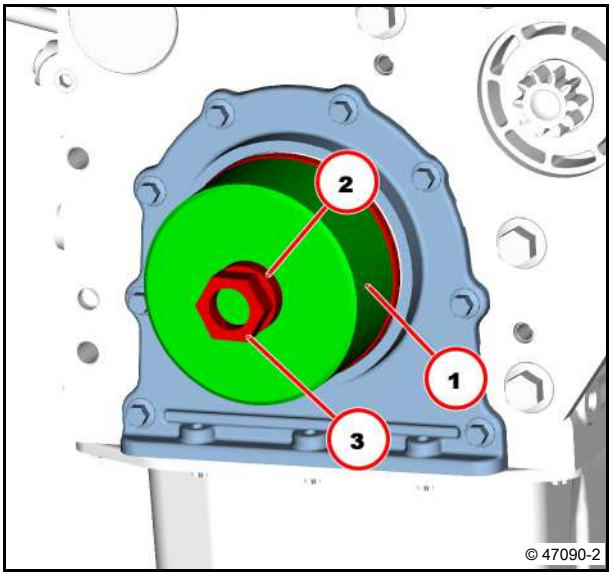

- Tighten nut to the stop of the assembly sleeve (1).

The installation depth is determined by the assembly tool.

- Remove assembly tool.
- Install flywheel.

Module 05

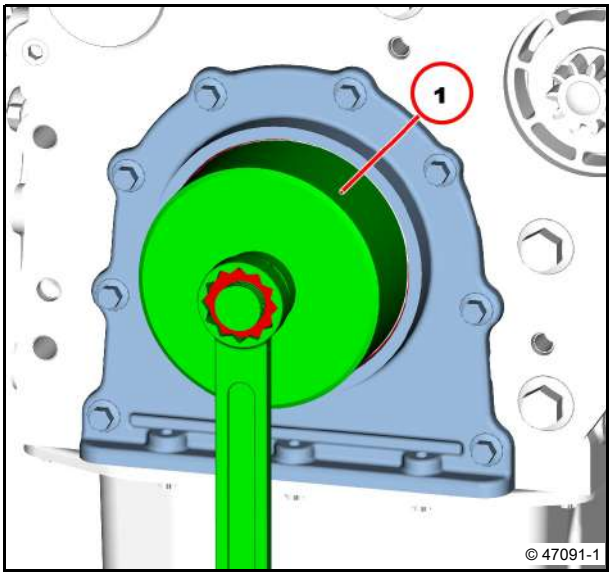

Removing and installing the gasket housing

Standard tools:
– Splint driver

– Safety information / User information

– Packing compound DEUTZ DW 67

Removing the gasket housing

1 Gasket housing
2 Shaft sealing ring
3 Hexagon head screw
234 Packing compound

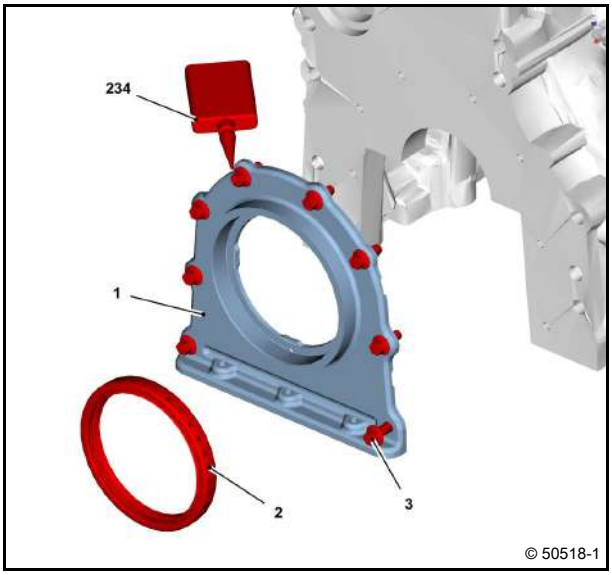

- Remove flywheel.
  Module 05
- Remove connection housing.
  Module 52
- Remove lubricating oil pan.
  Module 02
- Unscrew all screws (1).
- Remove gasket housing (2).

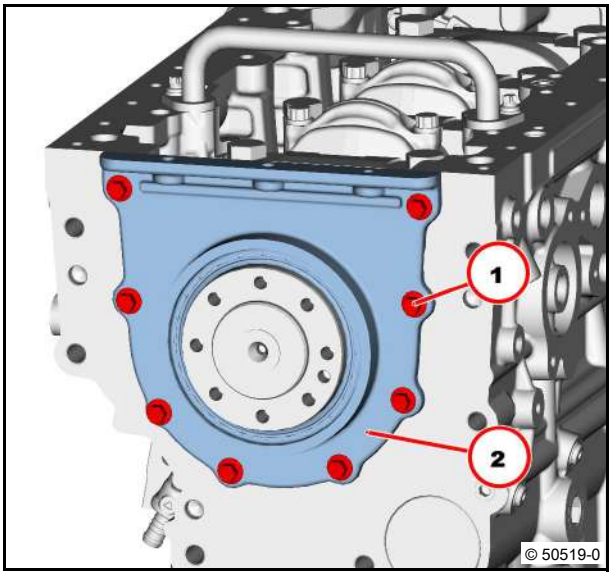

- Knock out crankshaft sealing ring (1).

Attention!
Do not damage the sealing surfaces.

- Visually inspect the components.

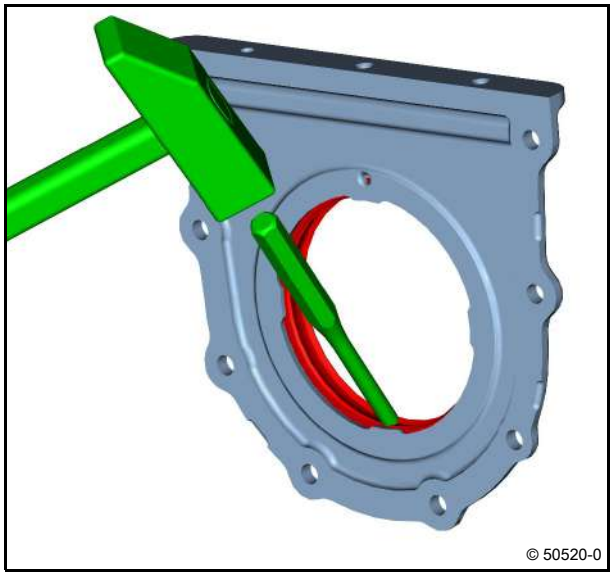

Installing the gasket housing

- Clean sealing surfaces.
- Apply sealing compound (1) evenly on the sealing surface.

Sealing cord strength approx. 0.5 - 0.6 mm.

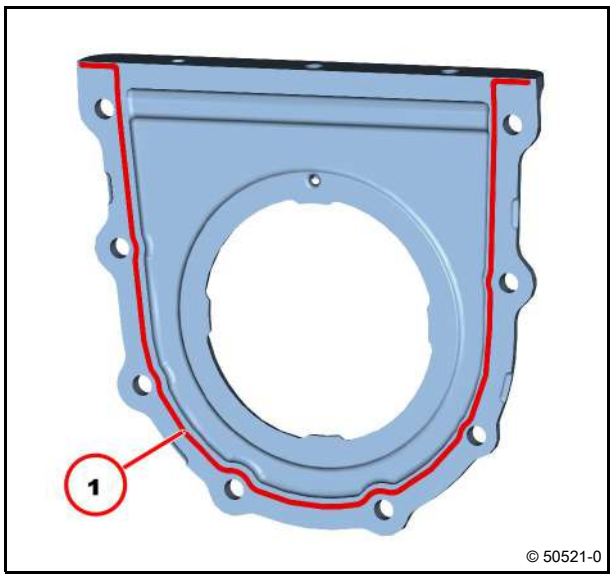

- Mount gasket housing.
- Tighten screws (1).

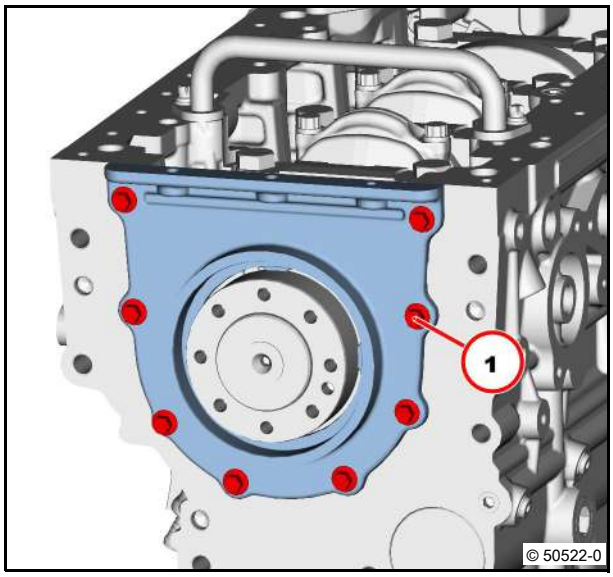

The sealing face (arrows) must be flush with the oil pan sealing face.

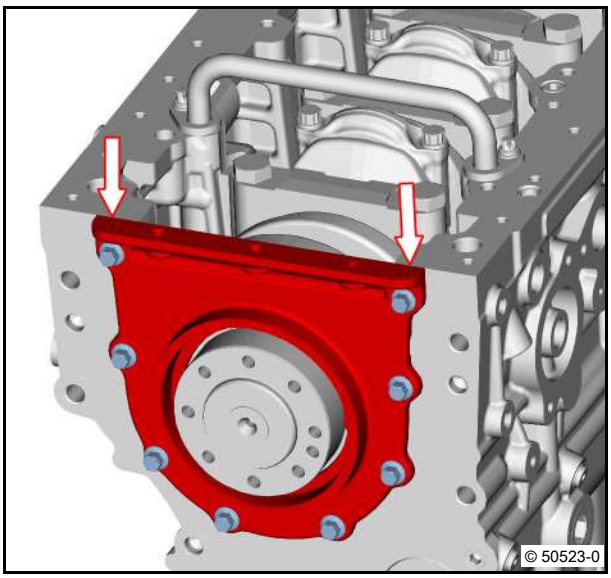

- Tighten the screws according to the tightening sequence.

  20 Nm

- Renew crankshaft sealing ring (flywheel side).

  Module 01

- Install lubricating oil pan.

  Module 02

- Install connection housing.

  Module 52

- Install flywheel.

  Module 05

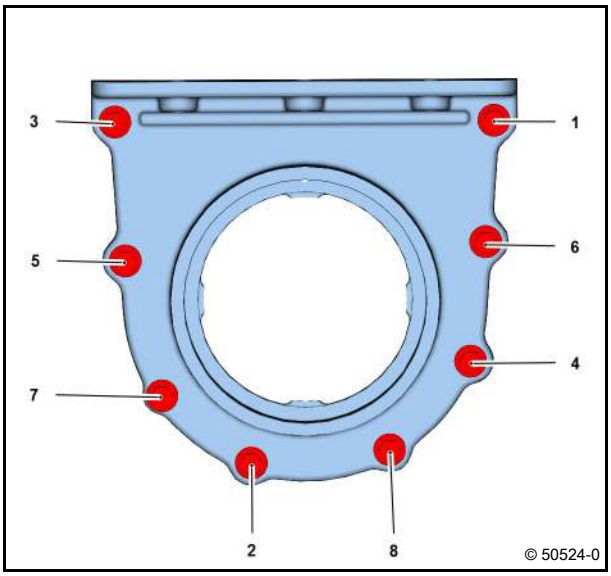

Technical Data

Tightening specifications

ID no.	Name	Screw type	Notes / Remark	Value
A01 095	Gasket housing on crankcase		Observe tightening sequence	20 Nm

For the tightening procedure according to torque using a torque wrench, a maximum variation of the tightening torque of +/- 10% is permissible.

Removing and installing the transfer line

Standard tools

– Packing compound
DEUTZ DW 73

Removing the transfer line

1 Transfer line
2 Torx screw
3 Screw plug 35 Nm
291 Packing compound

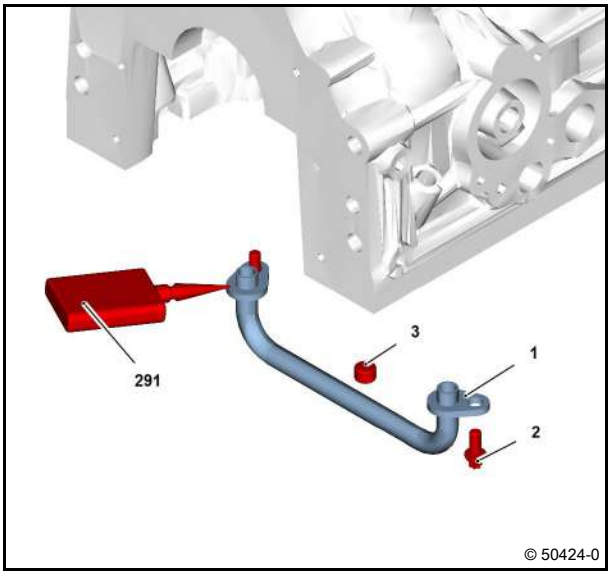

- Remove lubricating oil pan.
  Module 02
- Unscrew screws (1).
- Remove transfer line (2).
- Visually inspect the component.

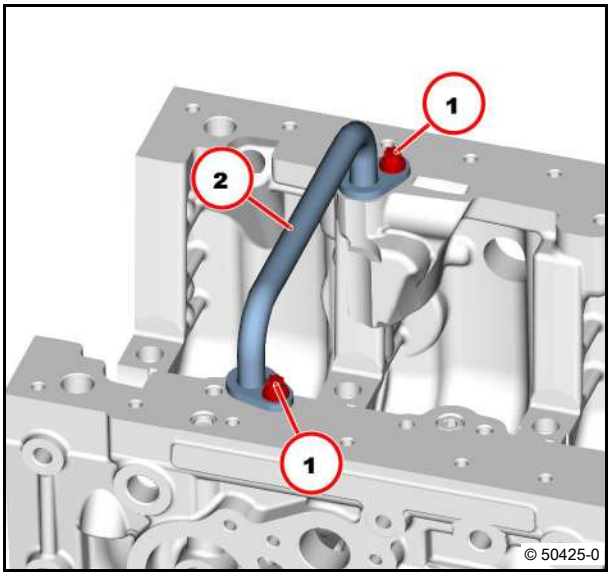

Installing the transfer line

- Clean sealing surfaces.

Attention!
No packing compound must get into the oil channel (1)!

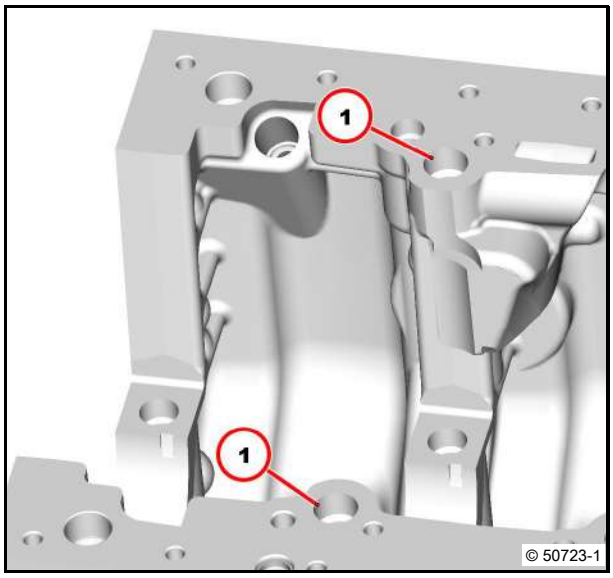

- Apply sealing compound (1) evenly on the sealing surface.

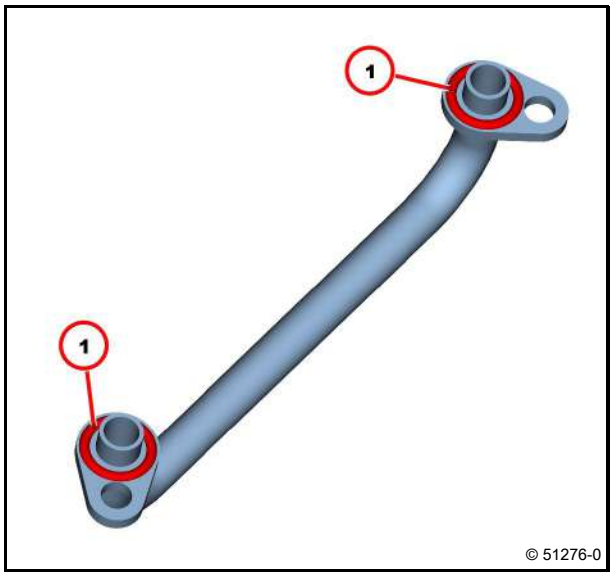

- Clean sealing surfaces.
- Mount transfer line (1).
- Tighten screws (2).

20 Nm

- Install lubricating oil pan.

Module 02

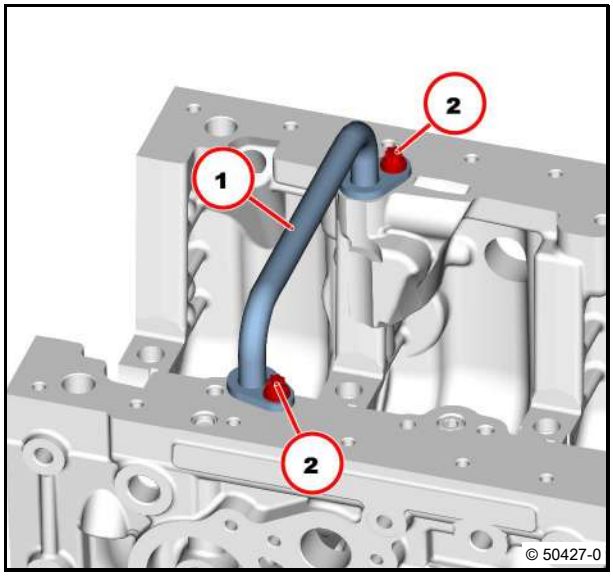

Technical Data

Tightening specifications

ID no.	Name	Screw type	Notes / Remark	Value
A01 016	Transfer line on crankcase			20 Nm

For the tightening procedure according to torque using a torque wrench, a maximum variation of the tightening torque of +/- 10% is permissible.

Closing parts

Standard tools

– Safety information / User information

1 Screw plug 13 Nm
2 Sealing ring

Use a new sealing ring.

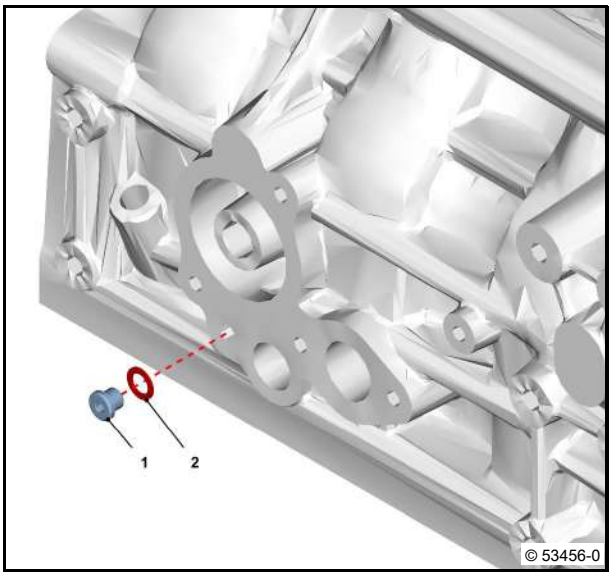

Oil measuring device

Standard tools

1 Oil dipstick
2 Ball
3 Stopper
4 Guide tube
5 O-ring

Use new round sealing ring.

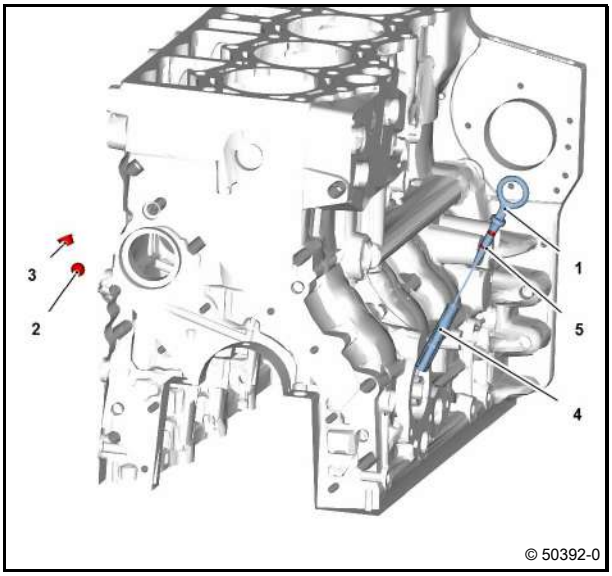

Line

Standard tools

1 Pipe clip
2 Pipe
3 Spring band clip
4 Rubber sleeve
5 Intake nozzle
6 Spring band clip
7 Hexagon head screw 8 Nm

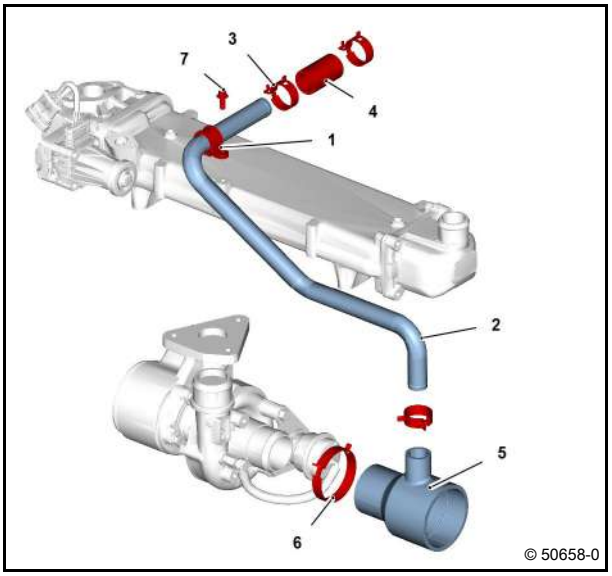

Removing and installing the lubricating oil pan

Standard tools

Special tools:
– Separating tool 02992301

– Packing compound DEUTZ DW 73

– Safety information / User information
– Operation manual

Attention!
Make sure that no gasket residue falls into the crankcase.
Seal all openings.

Collect leaking operating substances in suitable vessels and dispose of according to regulations.

Emptying and filling the engine with operating media must be carried out according to the operating manual and the appropriate documentation of the vehicle/equipment manufacturer.

Removing the lubricating oil pan

1 Lubricating oil pan
3 Torx screw

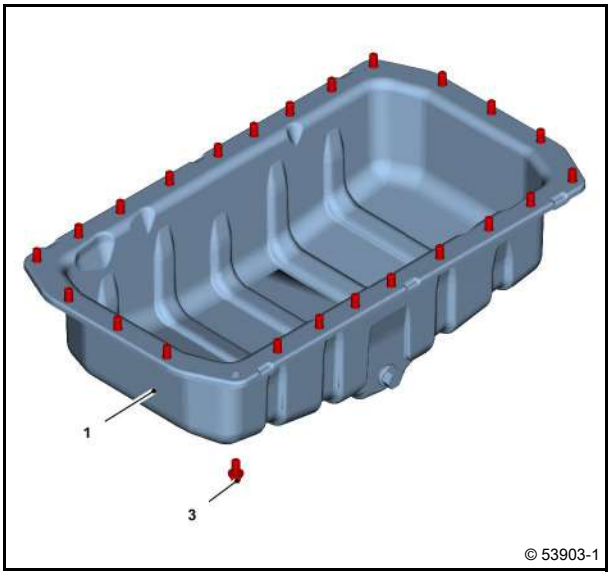

- Unscrew locking screw (1).
- Remove sealing ring.
- Drain lubricating oil, collect and dispose of according to regulations.

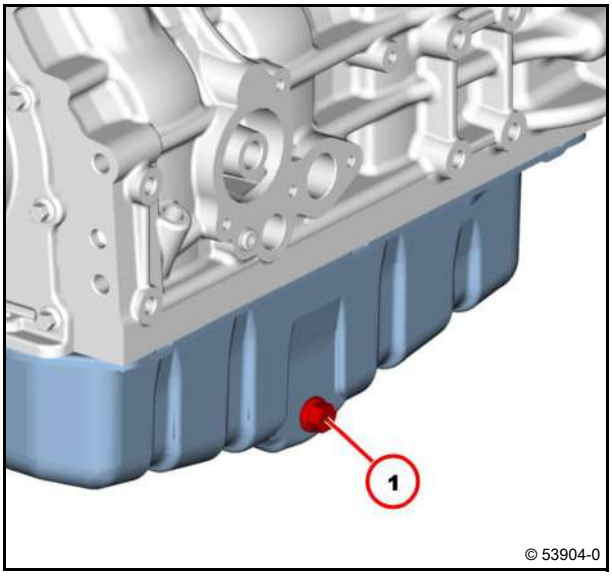

- Unscrew all screws (1).

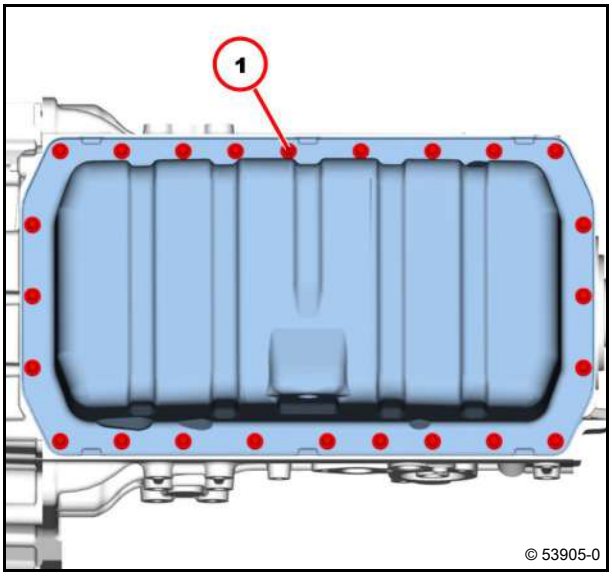

- Drive in separating tool (1) to the stop (2).

Attention!
The tool can only be driven in in the area of the crankcase.
Separation in the area of aluminium parts is not allowed.
Do not damage the sealing surfaces.

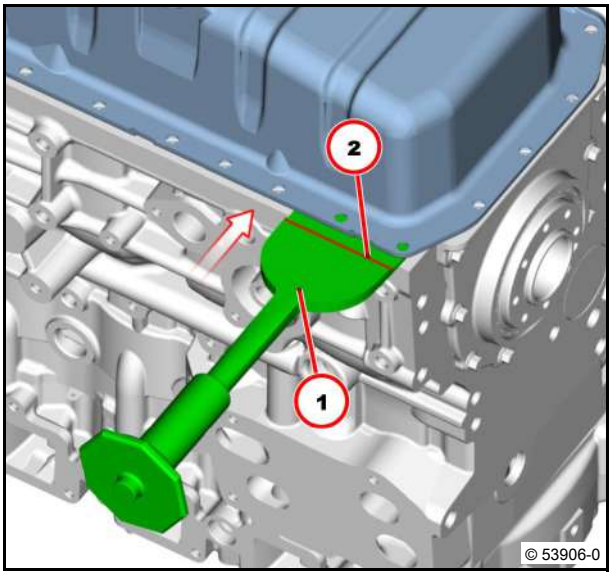

- Drive in second separating tool (1) to the stop (2).

Attention!
The tool can only be driven in in the area of the crankcase.
Separation in the area of aluminium parts is not allowed.
Do not damage the sealing surfaces.

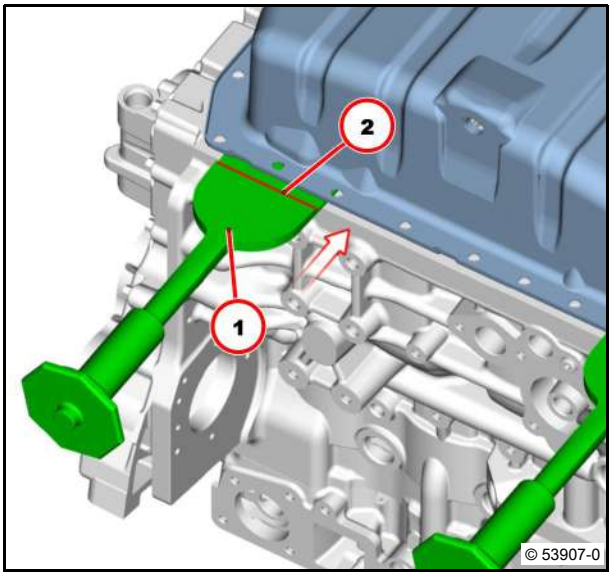

- Lever out lubricating oil pan.
- Remove lubricating oil pan.

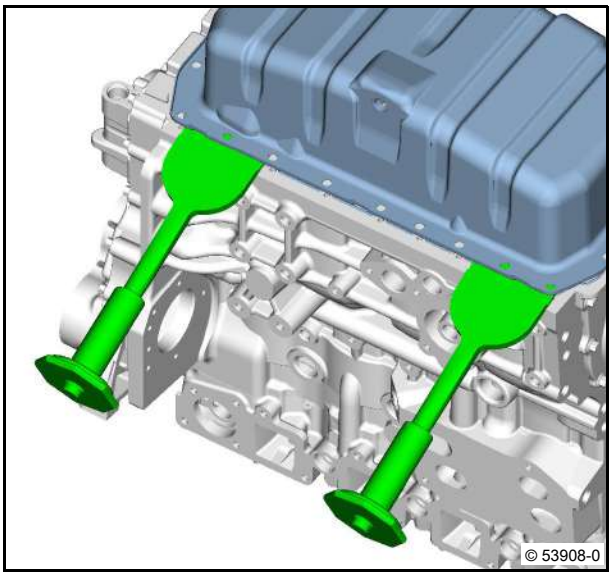

- Scrape off sealing compound with separating tool.

Danger!
Wear protective glasses.

- Clean the sealing surface on the crankcase with a wire brush.

The sealing surfaces must be dry and free from grease and dirt.

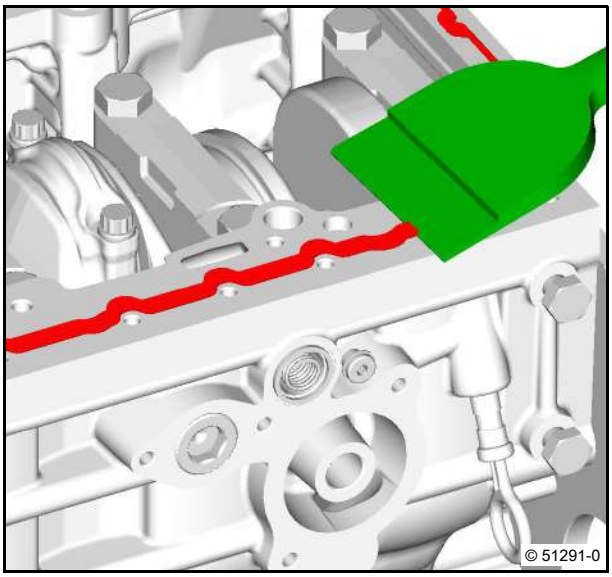

Danger!

Wear protective glasses.

- Clean the sealing surface on the lubricating oil pan with a wire brush.

The sealing surfaces must be dry and free from grease and dirt.

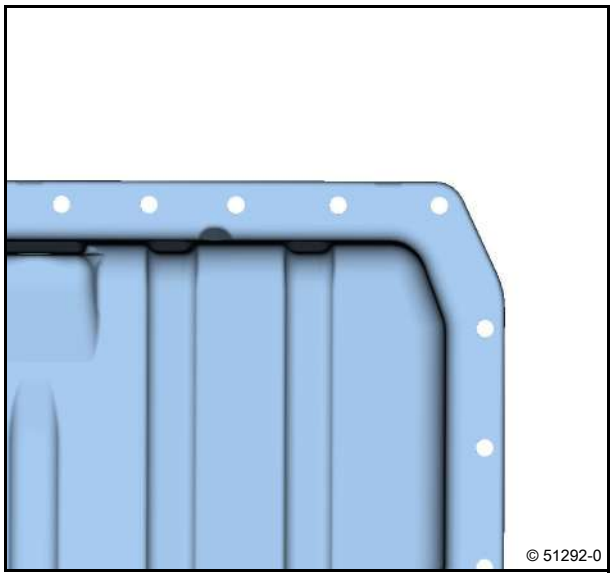

Installing the lubricating oil pan

- To align the lubricating oil pan, screw four pin bolts (1) diagonally opposed into the crankcase.

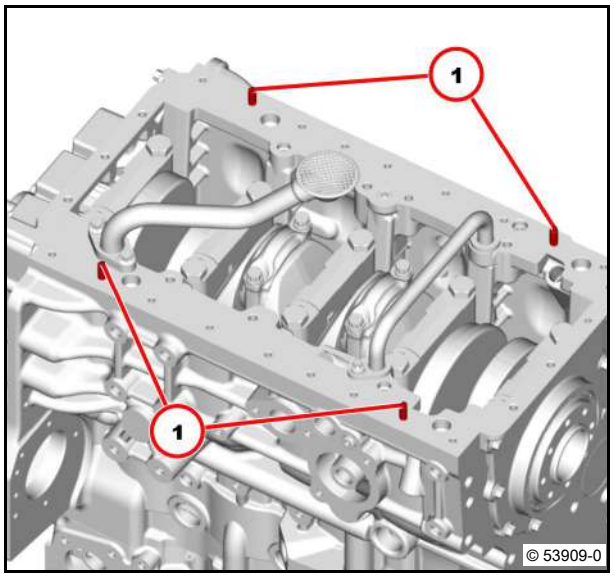

- Clean sealing surfaces.

The sealing surfaces must be dry and free from grease and dirt.

- Apply packing compound to the joints (arrows).

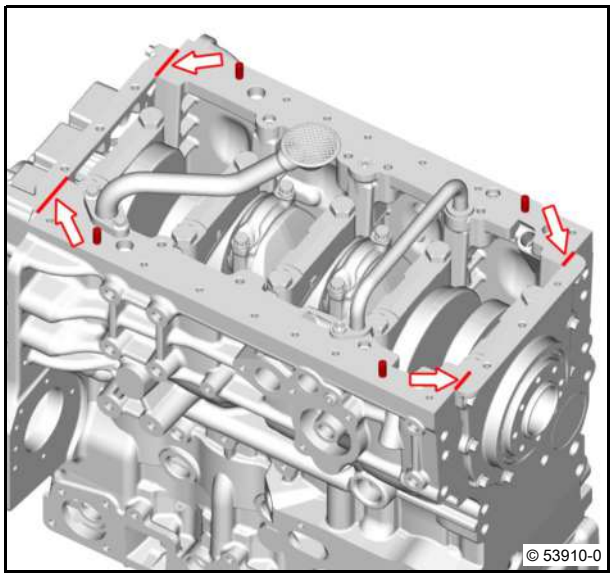

- Apply the sealing compound evenly.

  Thickness $3\ ^{+0.5}_{-0}$ mm

Attention!
The specified packing cord process must be complied with.

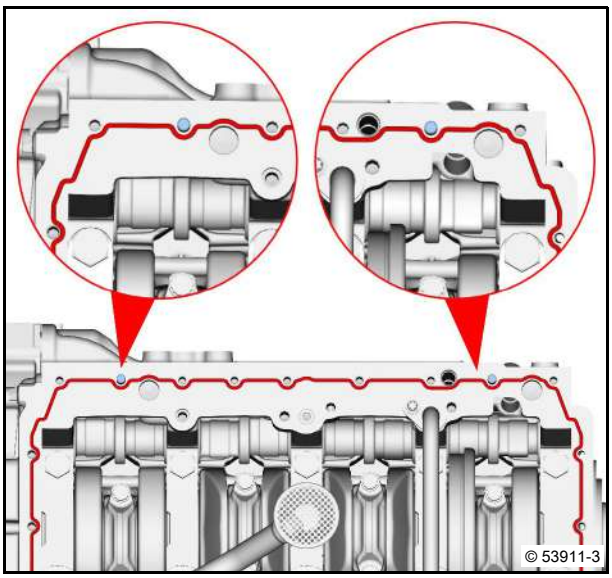

- Apply the sealing compound evenly.

  Thickness $3\ ^{+0.5}_{-0}$ mm

Attention!
The specified packing cord process must be complied with.

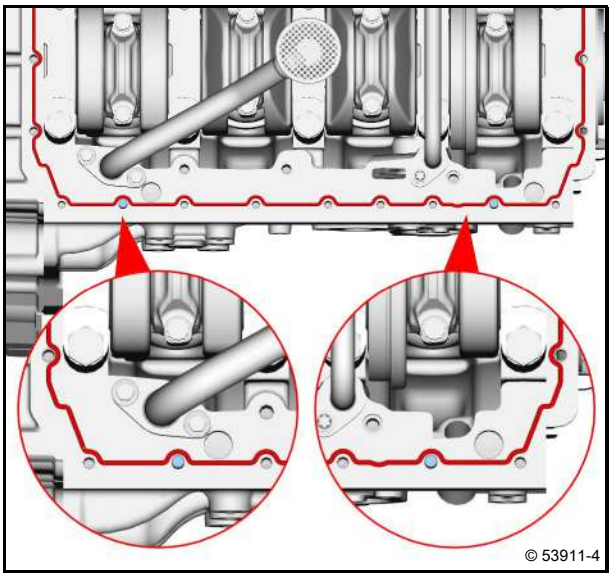

- Align the lubricating oil pan in the appropriate installation position with the pin bolts.
- Mount lubricating oil pan.

Attention!
Do not move the lubricating oil pan any more.
Observe the drying time for the packing compound.

- Unscrew the pin bolts.
- Fasten all screws (1).

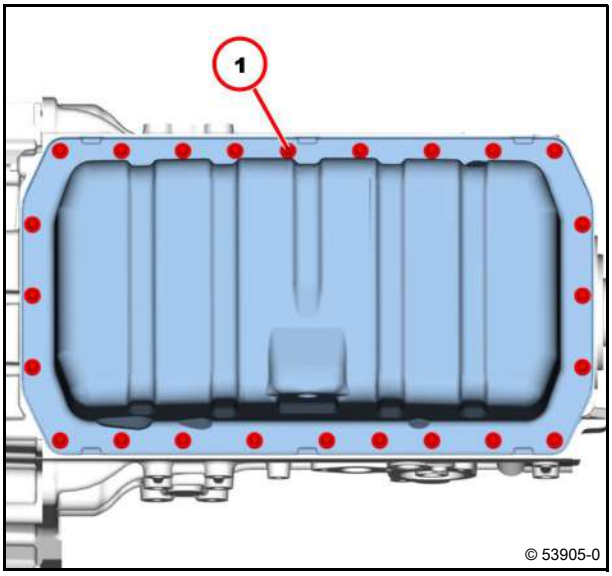

- Tighten the screws according to the tightening sequence.

  20 Nm

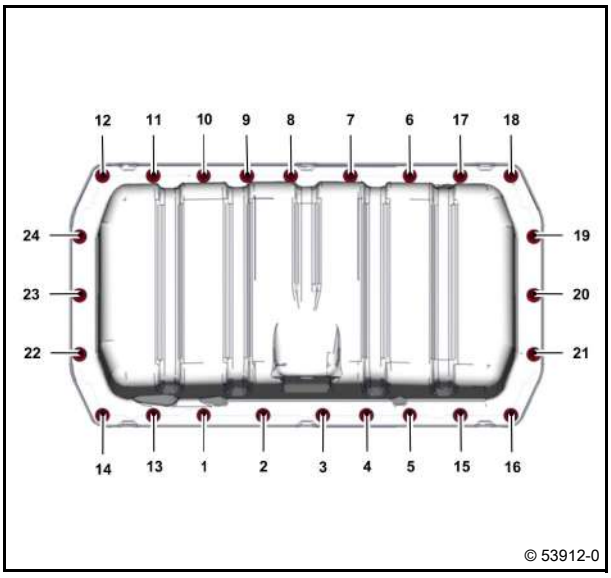

- Mount new sealing ring.
- Tighten screw plug (1).

  55 Nm

- Fill in lubricating oil according to operating manual.

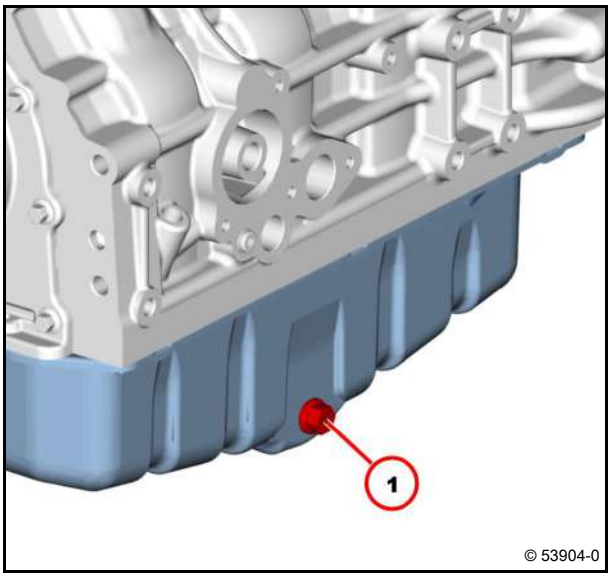

Technical Data

Tightening specifications

ID no.	Name	Screw type	Notes / Remark	Value
A02 030	Lubricating oil pan on crankcase		Observe tightening sequence!	20 Nm
A02 031	Locking screw on lubricating oil pan		Replace sealing ring	55 Nm

For the tightening procedure according to torque using a torque wrench, a maximum variation of the tightening torque of +/- 10% is permissible.

Closing parts

Standard tools

Collect draining lubricating oil and dispose of properly.

1	Screw plug	55 Nm
2	Sealing ring	

Use a new sealing ring.

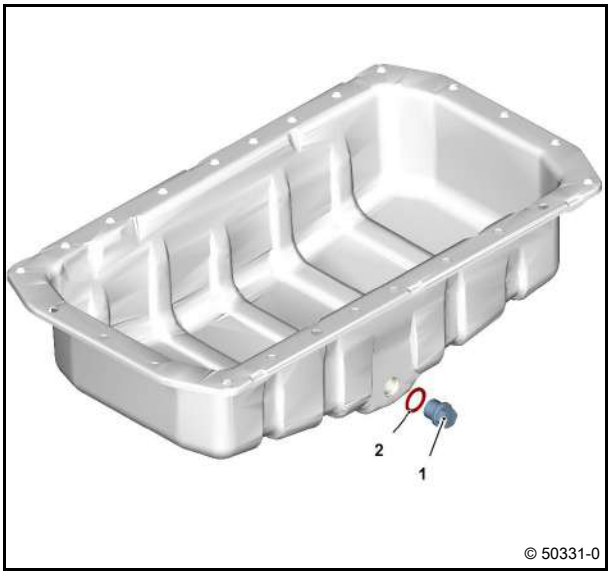

Drain valve

Standard tools

– Safety information / User information

Collect draining lubricating oil and dispose of properly.

1 Drain valve 55 Nm
2 Sealing ring

Use a new sealing ring.

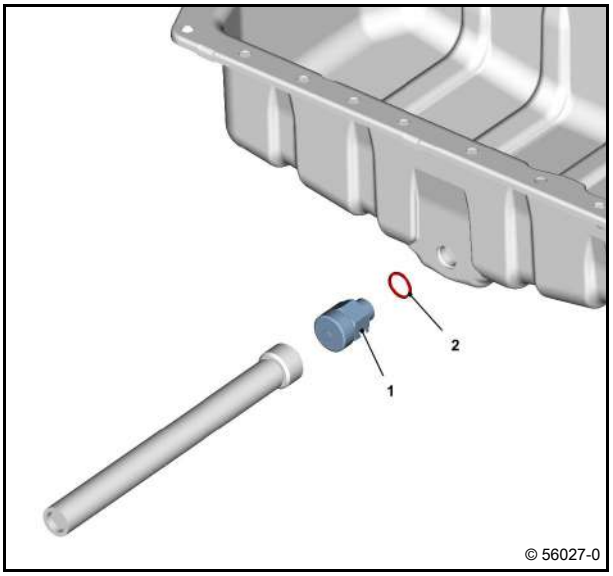

Oil filling

Standard tools

– Safety information / User information

1 Screw plug 95 Nm

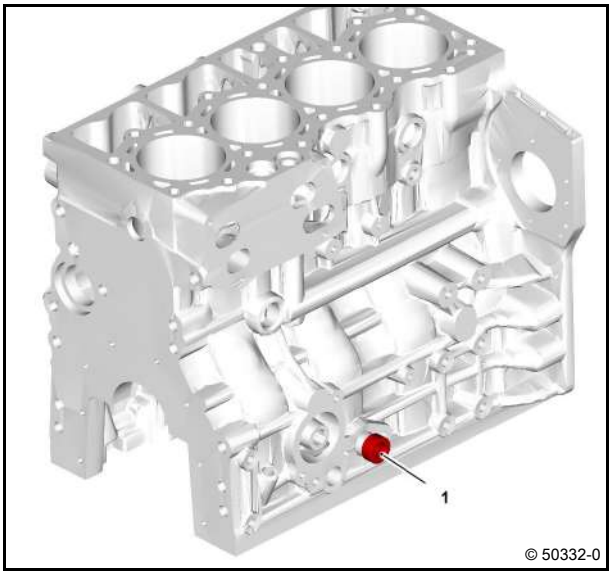

Removing and installing the V-belt pulley / V-ribbed pulley

Standard tools:
- Torque wrench ≥ 100 Nm
- Adapter 1/2 inch inner square to 1 inch external square

Special tools:
- Pin type socket wrench insert, wrench size 36 01899199
- Force multiplier 01899370
- Turning gear / locking device 02992380
- Counter support 02992475

- Marker pen, waterproof, permanent
- Degreasing agent/cleaning agent

- Safety information / User information
- Operation manual

Attention!
Pay attention to utmost cleanliness.

The following work procedure describes the removal and installation of the V-ribbed pulley.

The V-belt pulley is removed and installed in the same way.

Removing the V-belt pulley / V-ribbed pulley

- Remove the V-belt / V-ribbed belt.

  Operation manual

- Remove starter.

  Module 44

- Insert turning gear / locking device (1).

  Toothed wheel of the turning gear / locking device in the toothed starter ring.

- Tighten screws (2).

  30 Nm

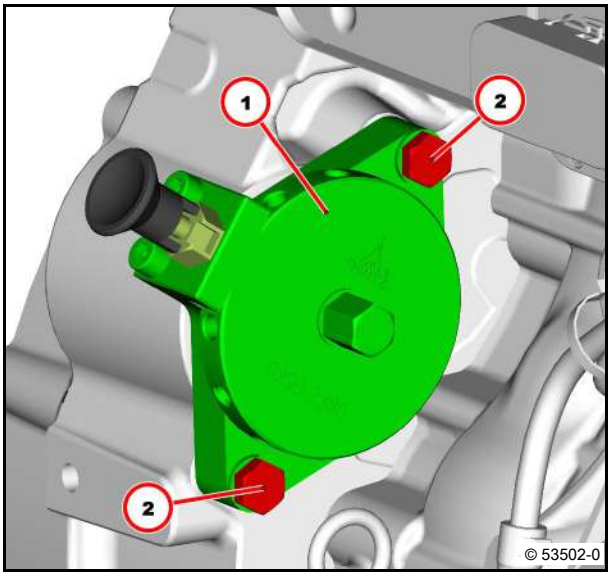

- Pull out and turn detent pin (1).

Observe position of the latches (2).

- Turn drive (3) carefully until the detent pin latches into place.

Observe engine direction of rotation.

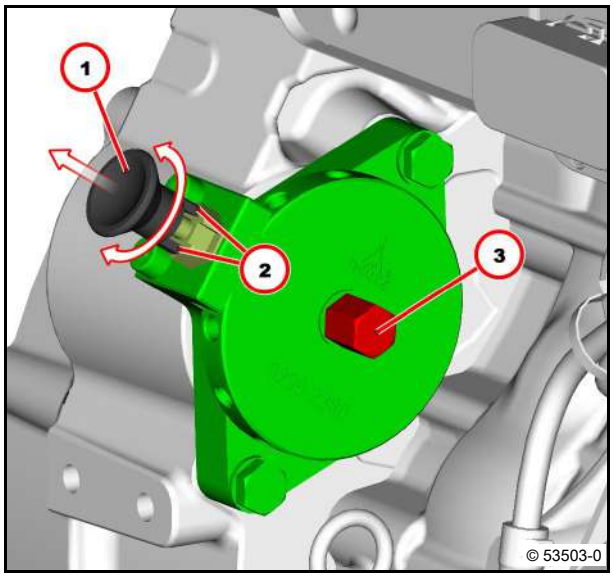

– **Version without air-conditioning system**

- Push spacer sleeve (2) onto screw-in bolt (1).
- Screw on the screw-in bolt (1) and spacer sleeve (2).
- Tighten the screw-in bolt (1).

50 Nm

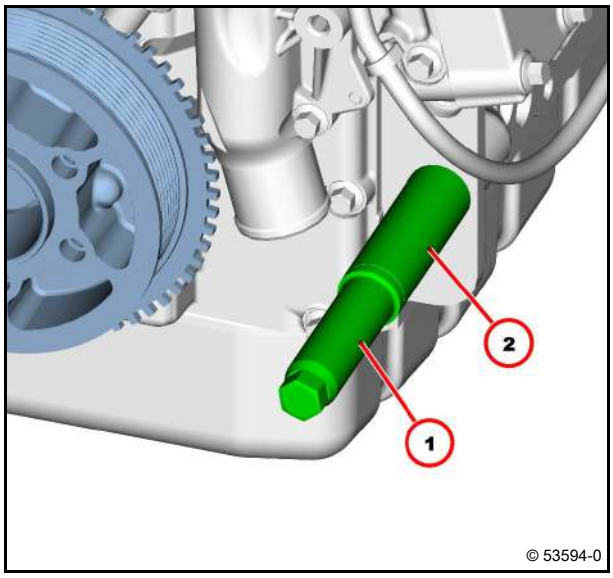

– **Version with air-conditioning system**

- Unscrew screw (1).
- Screw on screw-in bolt (2).
- Tighten the screw-in bolt (2).

If a console is available for the coolant compressor, mount the screw-in bolt without the spacer sleeve.

50 Nm

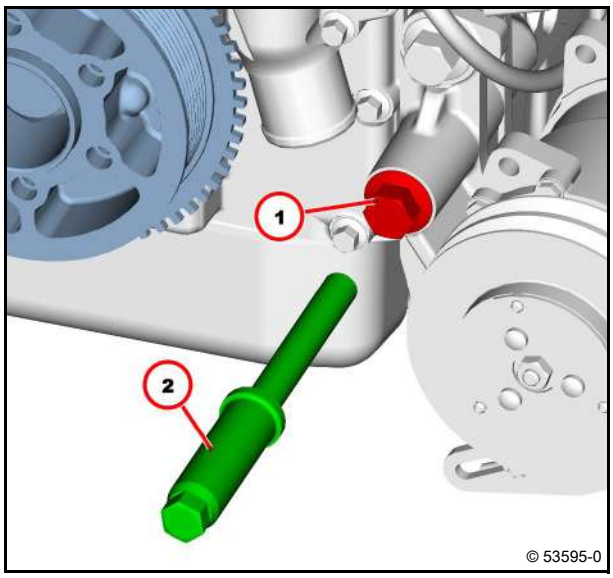

- Attach pressure plate (1).

Bores (2) and threaded bores (3) must be in alignment.

- Tighten all screws (4).

30 Nm

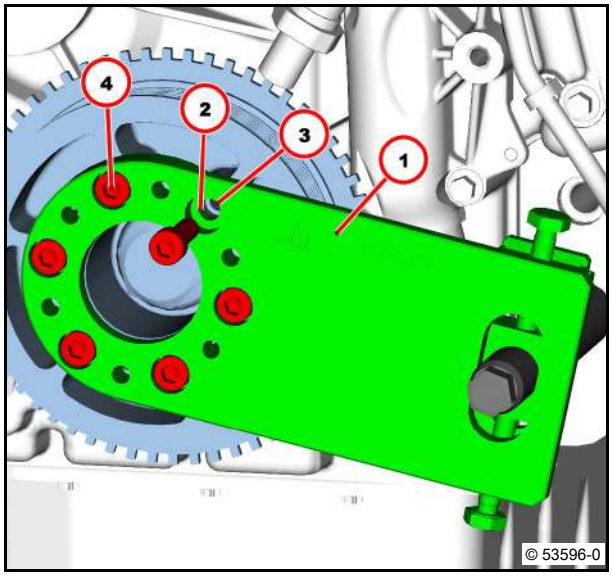

- Align spline end (1) in such a way that the screw-in bolt lies almost in the centre of the recess.
- Tighten screws (2).
- Tighten screws (2).

30 Nm

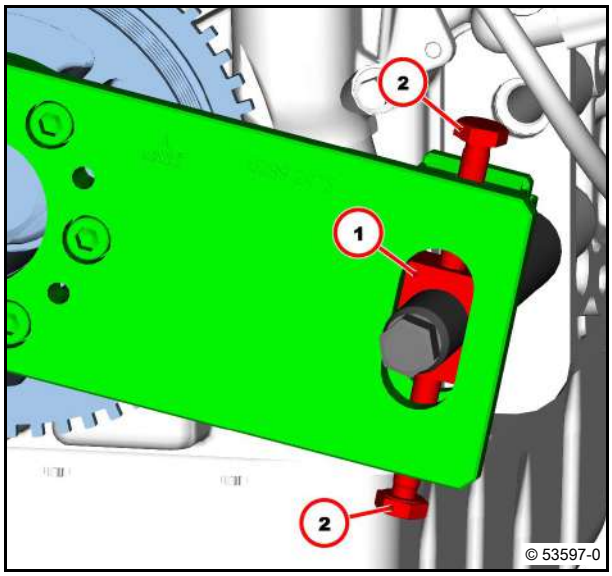

- Insert counter support (1).
- Fasten all screws (2).
- Tighten screws (2).

30 Nm

Depending on the installation situation, the counter holder can be positioned variably.

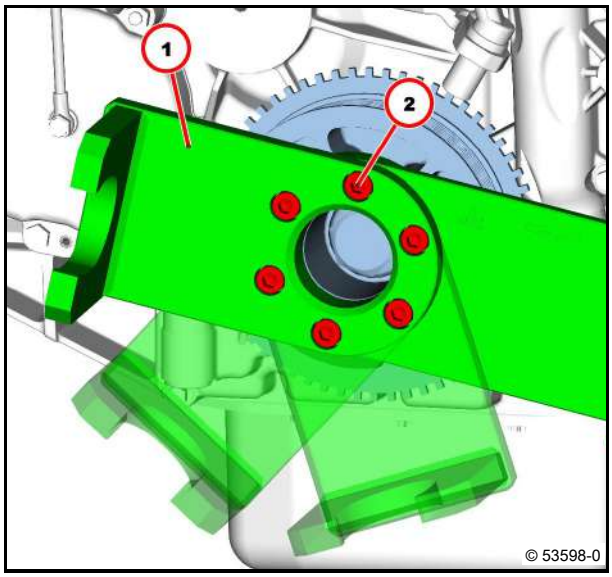

- Insert socket wrench insert and force multiplier (1).
- Snap in non-return device (2) in position CCW.

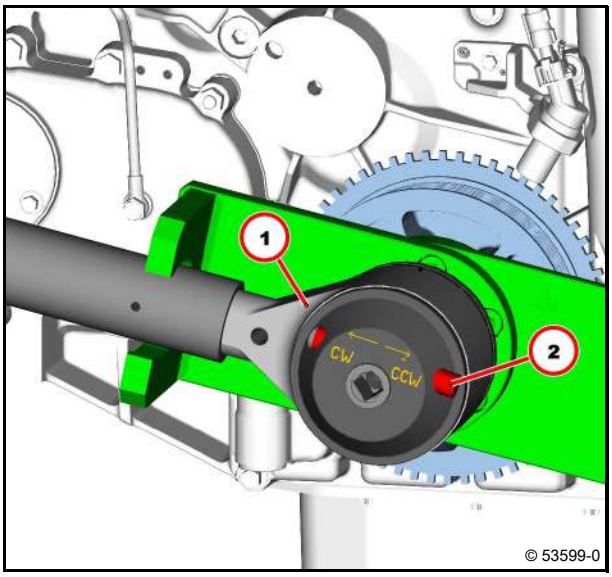

- Hold force multiplier.
- Loosen central screw in direction of arrow.
- Remove force multiplier and socket wrench insert.
- Remove central screw.

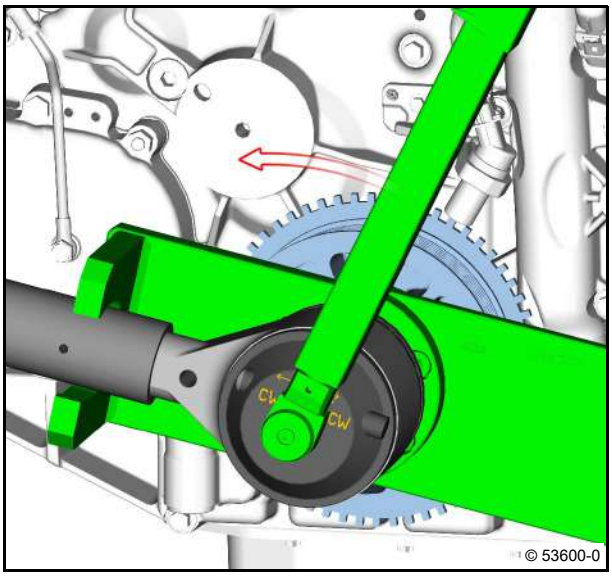

- Loosen screws (1).

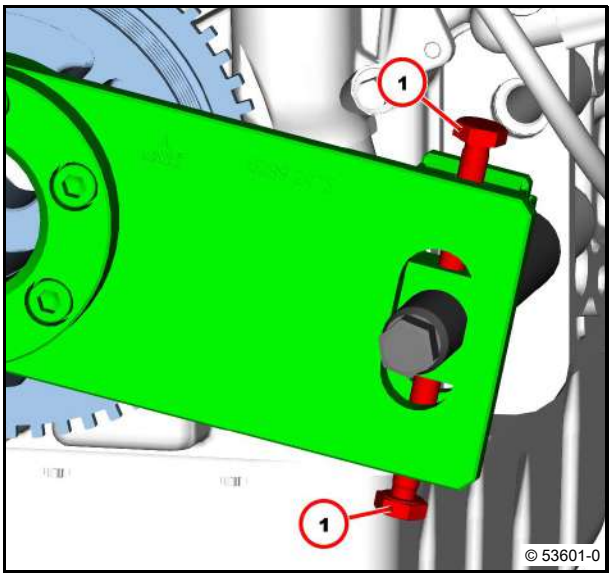

- Unscrew screws (1).
- Remove counter holder (2).
- Unscrew screws (3).
- Remove compressor plate (4)
- Detach the V-belt pulley / V-ribbed pulley.
- Remove sensor wheel.

Module 05

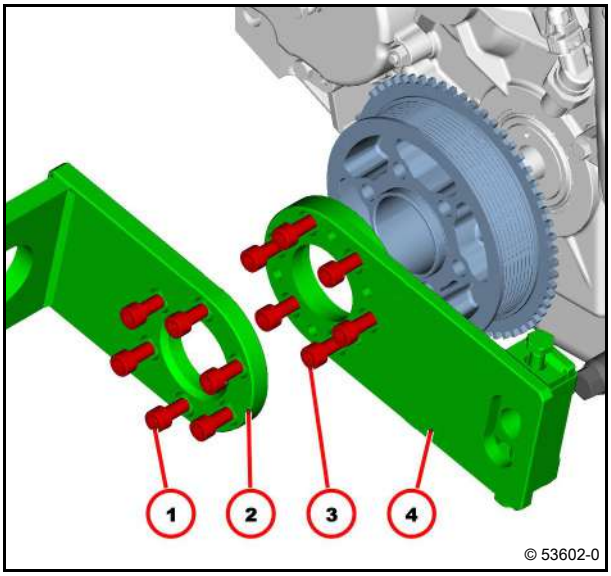

Installing the V-belt pulley / V-ribbed pulley

- Install sensor wheel.

Module 05

Attention!
Pay attention to utmost cleanliness.

- Clean contact surfaces.
- Clean the locating hole.
- Press in the clamping pin (1) to the end stop.

Attention!
Ensure that the installation location is free from faults.

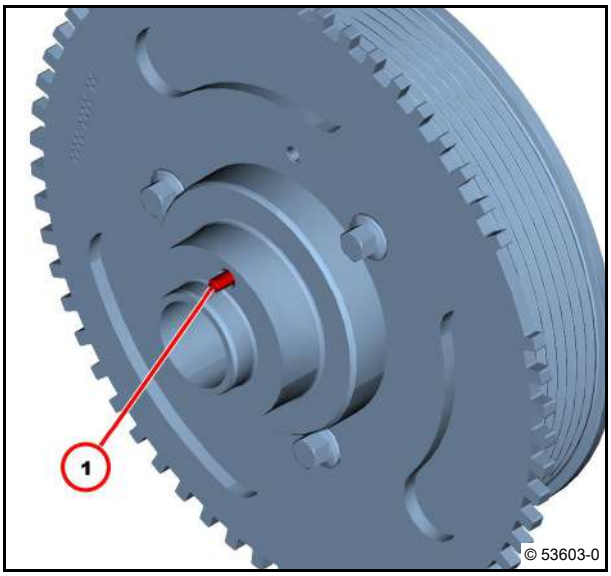

- Apply help marking (1).

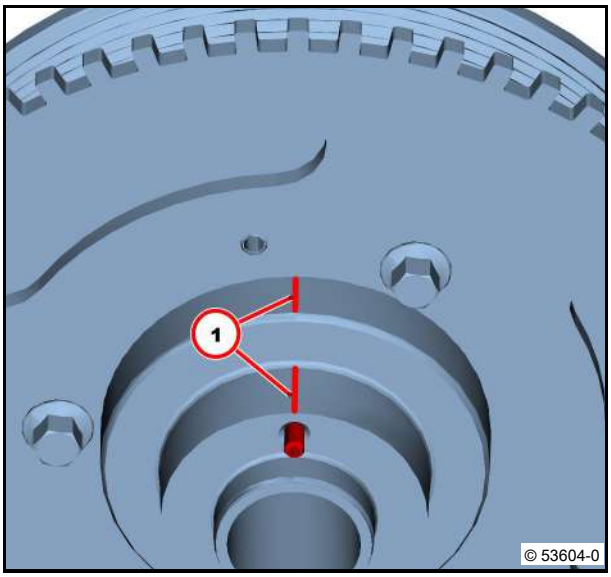

- Pull out and turn detent pin (1).

Observe position of the latches (2).

- Turn drive (3) carefully up to the desired crankshaft position.

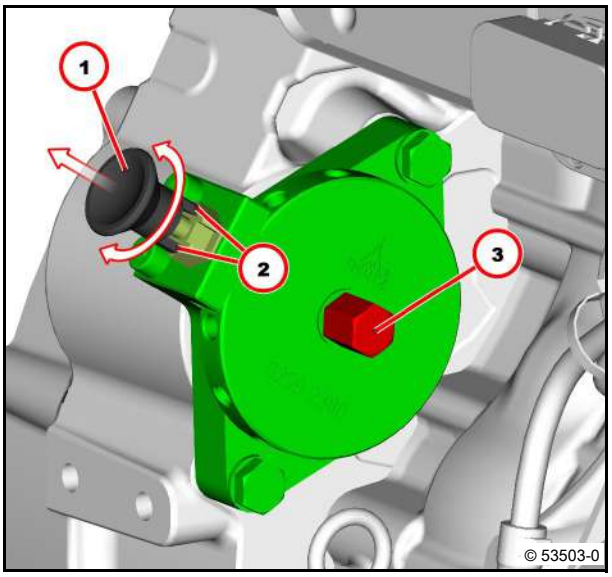

- Turn drive carefully until the bore (1) is at the top and the detent pin latches into place.

Attention!
Pay attention to utmost cleanliness.
The contact surfaces must be dry and free from grease and dirt.

- Clean contact surfaces.
- Clean the locating hole.
- Apply help marking (2).

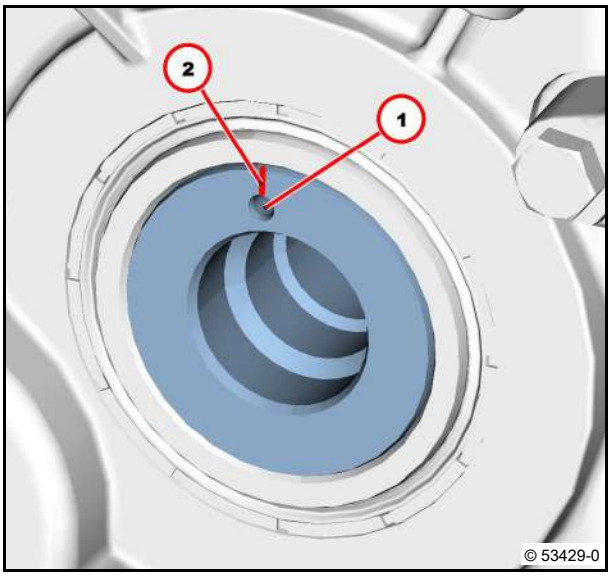

Attention!
Pay attention to utmost cleanliness.
The contact surfaces must be dry and free from grease and dirt.

- Attach V-belt pulley / V-ribbed pulley to bore (2) with clamping pin (1).

Observe help markings.

- Press on the V-belt pulley / V-ribbed pulley.

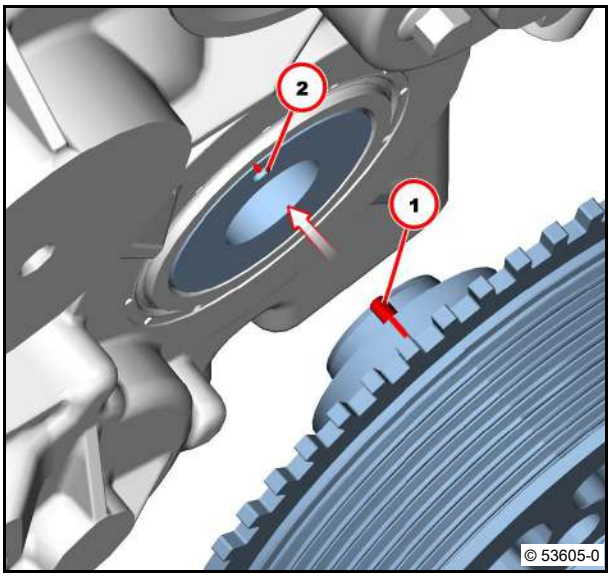

- Attach new washer to new central screw.
- Turn in new central screw with socket wrench insert.
- Attach pressure plate (1).

Bores (2) and threaded bores (3) must be in alignment.

- Tighten all screws (4).

30 Nm

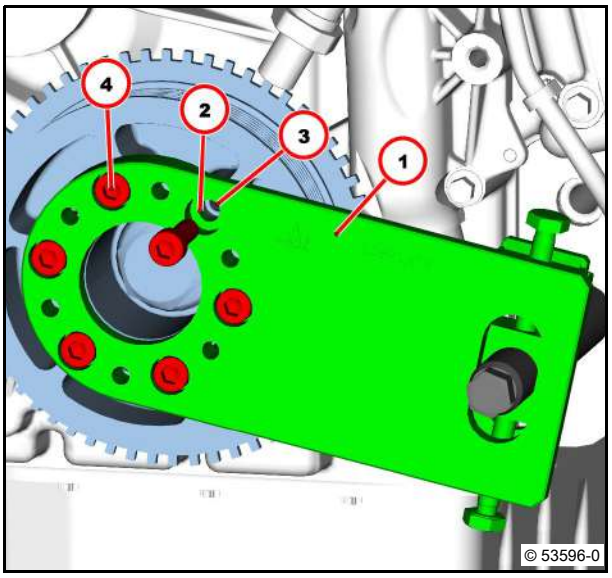

- Align spline end (1) in such a way that the screw-in bolt lies almost in the centre of the recess.
- Fasten all screws (2).
- Tighten screws (2).

30 Nm

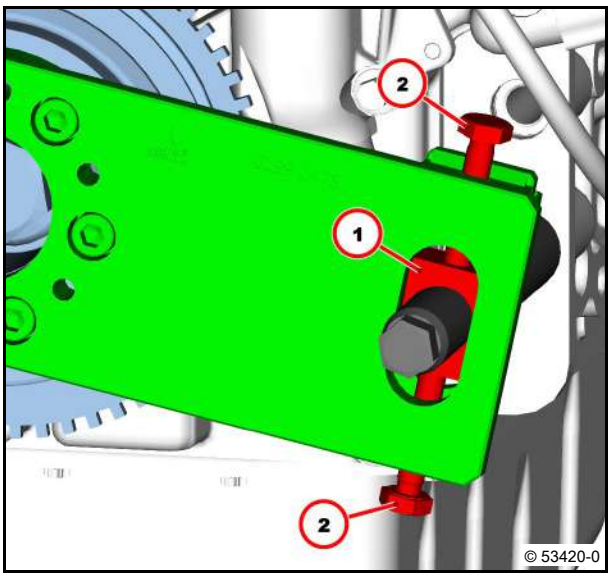

- Tighten new central screw with torque wrench.
  - Stage 1:

100 Nm

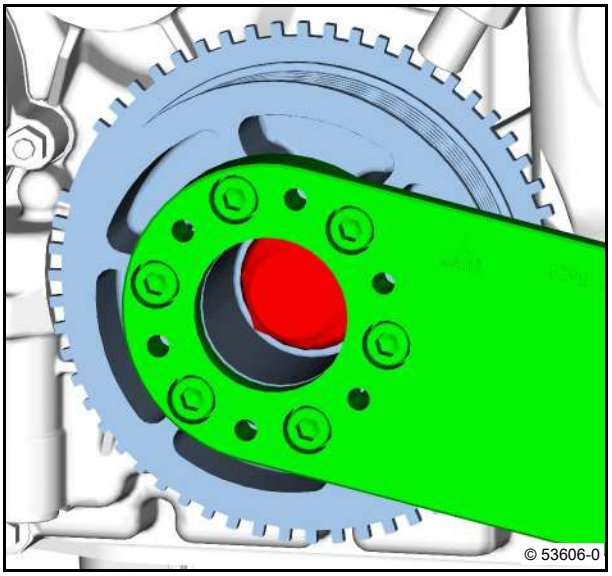

- Insert counter support (1).
- Tighten screws (2).

30 Nm

Depending on the installation situation, the counter holder can be positioned variably.

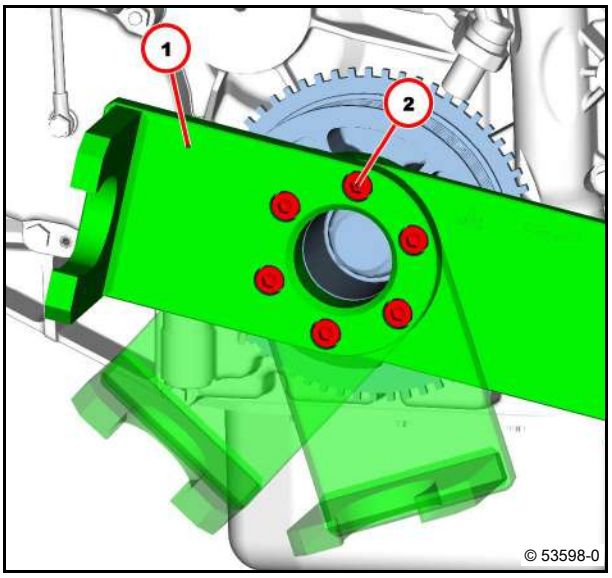

- Insert socket wrench insert and force multiplier (1).
- Snap in non-return device (2) in position CW.

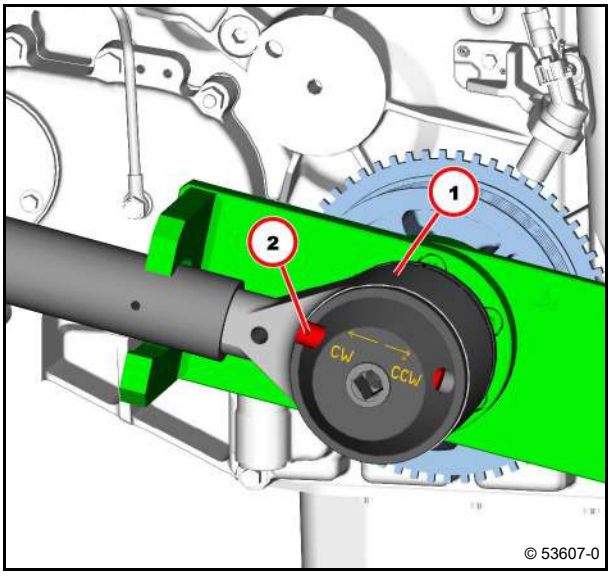

- Set graduated collar (1) to "0".

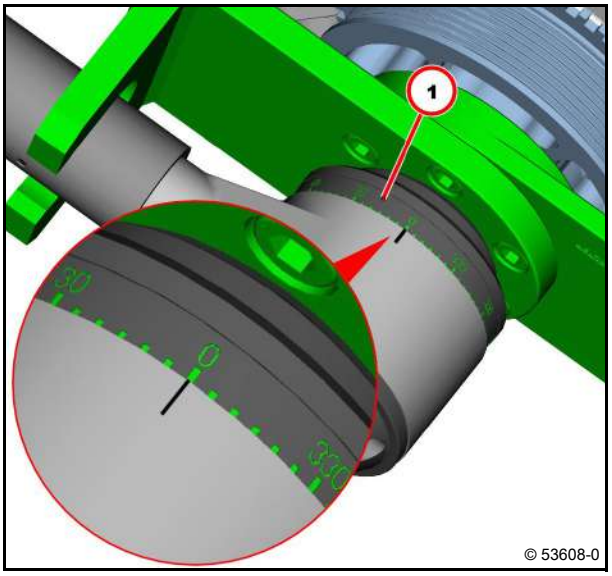

- Hold force multiplier (1).
- Tighten central screw in direction of arrow.
  - Stage 2:

    130°

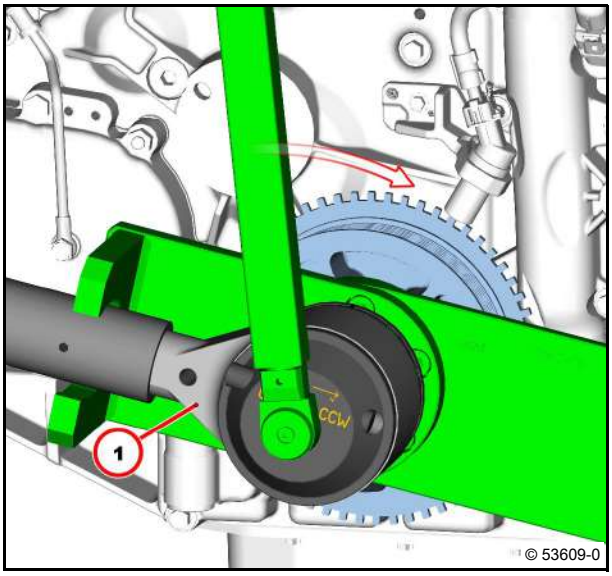

- Keep torque wrench pressed in direction of arrow.
- Move non-return device (1) into position CCW.

Danger!

There is danger of injury if a force multiplier is removed without being discharged.

- Remove force multiplier and socket wrench insert.

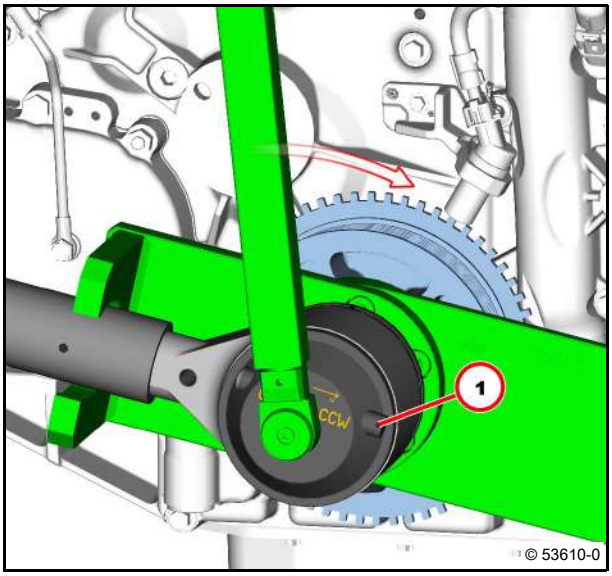

- Loosen screws (1).

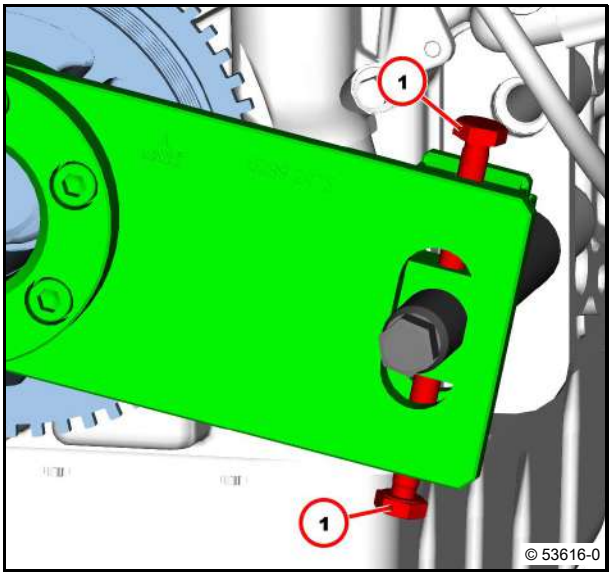

- Unscrew screws (1).
- Remove counter holder (2).
- Unscrew screws (3).
- Remove compressor plate (4)

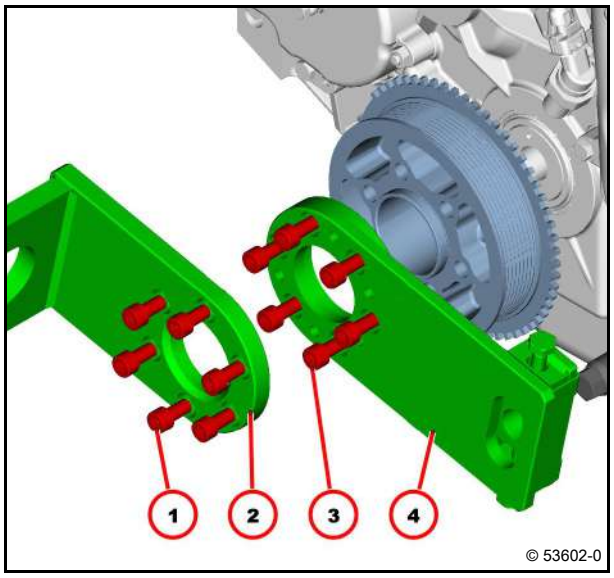

– **Version without air-conditioning system**

- Unscrew screw-in bolt (1).
- Remove screw-in bolt (1) and spacer sleeve (2).

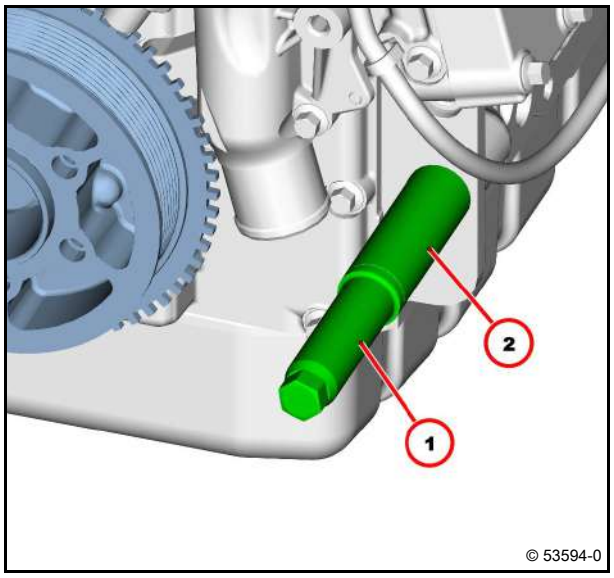

– **Version with air-conditioning system**

- Unscrew screw-in bolt (1).
- Fasten screw (2).
- Tighten screw (2).

Module 82

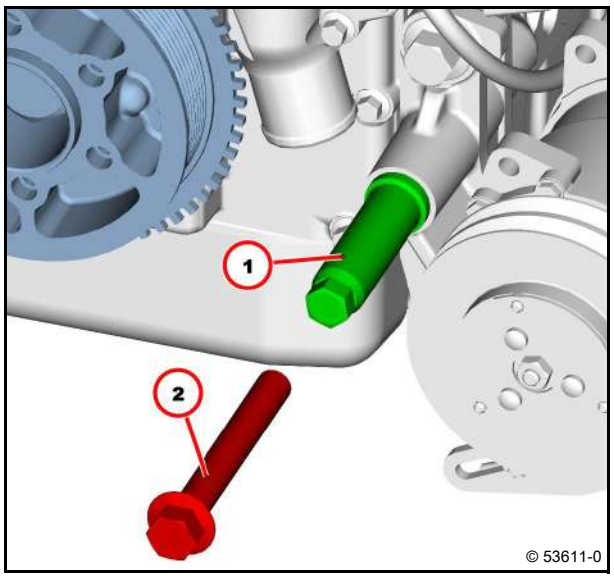

- Unscrew screw (1).
- Remove turning gear / locking device (2).
- Install starter.

  Module 44

- Fit and tension V-belt / V-ribbed belt.

  Operation manual

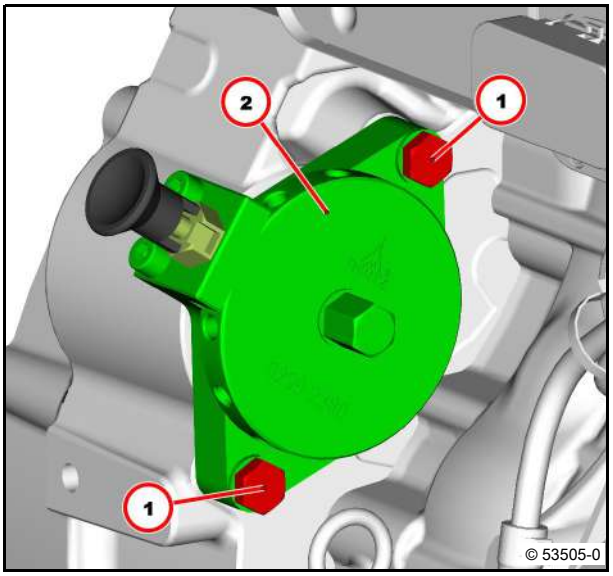

Technical Data

Tightening specifications

ID no.	Name	Screw type	Notes / Remark	Value
A05 030	V-belt pulley / V-ribbed pulley on crankshaft		Use new washer Use new screw. Stage 1:	100 Nm
A05 030	V-belt pulley / V-ribbed pulley on crankshaft		Stage 2:	130°
A49 050	Turning gear / locking device, fastening			30 Nm

For the tightening procedure according to torque using a torque wrench, a maximum variation of the tightening torque of +/- 10% is permissible.

Removing and installing the flywheel (Fastening parts)

Standard tools

Special tools:
- Guide pin (self-constructed)
- Auxiliary screws M10x120
- Rotation angle disc 01899093

Removing the flywheel

1 Flywheel
2 Ring gear
3 Screw

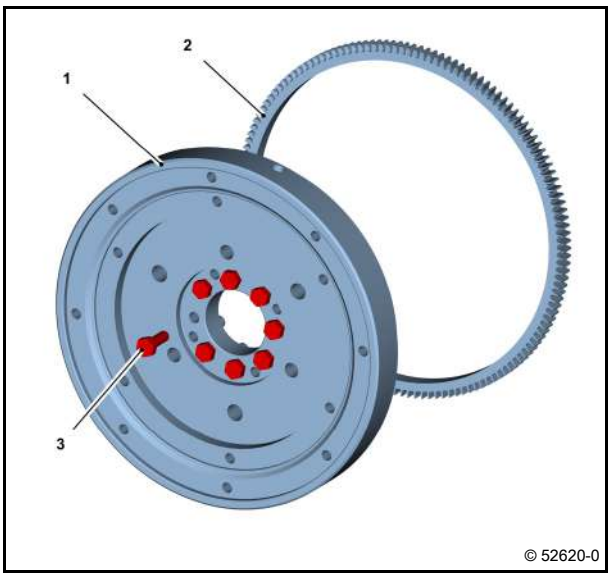

- Hold the crankshaft at the central screw.
- Screw in auxiliary screws (1).
- Unscrew screws (2).
- Remove flywheel using auxiliary screws.
- Visually inspect the components.

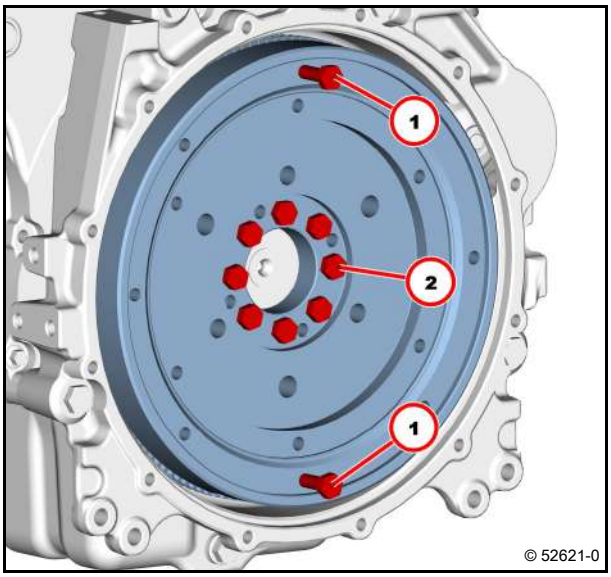

Installing the flywheel

- Insert self-made guide pin (arrow).

The bores in the flywheel must match the threaded bores in the crankshaft flange.

- Mount flywheel using auxiliary screws.

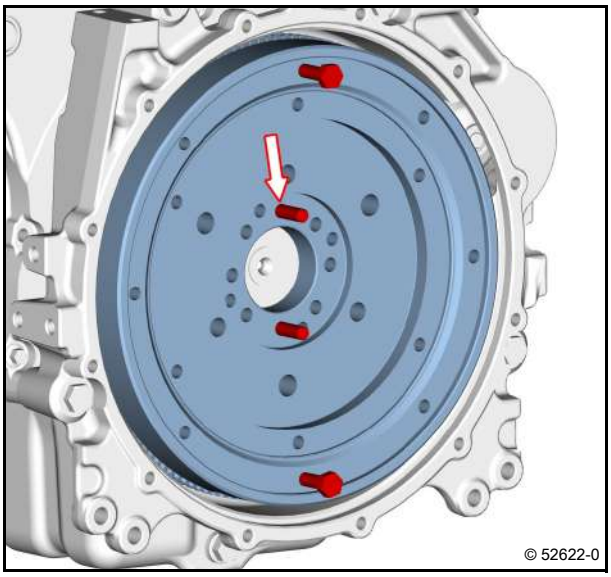

Attention!
Renew screws every time they are loosened.

- Tighten screws alternately.
  - Stage 1:

    30 Nm
- Tighten screws with rotation angle disc.
  - Stage 2:

    60°
  - Stage 3:

    30°
- Remove guide pin.
- Unscrew auxiliary screws.

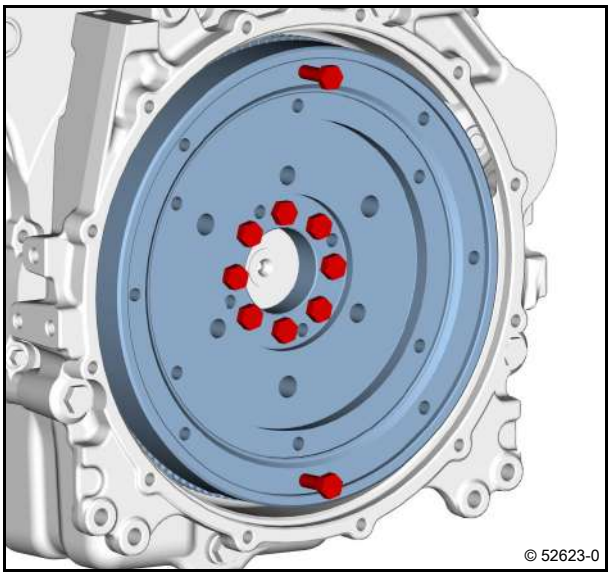

Technical Data

Tightening specifications

ID no.	Name	Screw type	Notes / Remark	Value
A05 001	Flywheel on crankshaft		Stage 1: Use new screws. Oiled screws.	30 Nm
A05 001	Flywheel on crankshaft		Stage 2:	60°
A05 001	Flywheel on crankshaft		Stage 3:	30°

For the tightening procedure according to torque using a torque wrench, a maximum variation of the tightening torque of +/- 10% is permissible.

Removing and installing the sensor wheel

Standard tools

– Locking agent
DEUTZ DW 72

Removing the sensor wheel

1 Sensor wheel
2 Hexagon head screw
3 Clamping pin
4 V-belt pulley
5 Central screw
6 Clamping pin
7 Washer

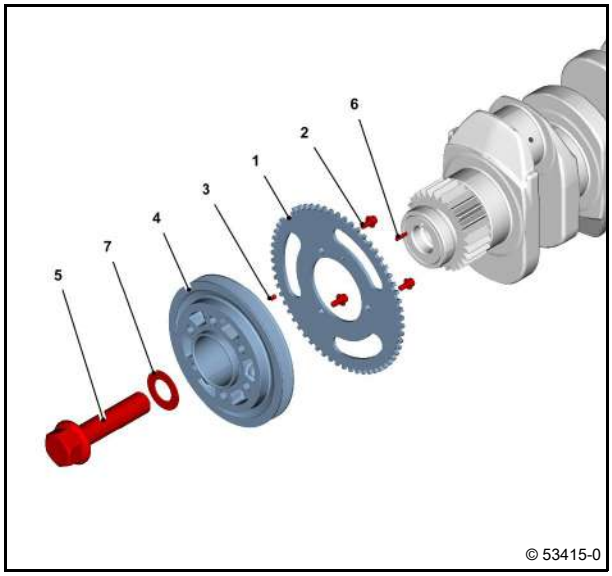

- Remove V-belt pulley.
  Module 05
- Unscrew screws (1).
- Remove sensor wheel (2).
- Remove clamping pin (3).

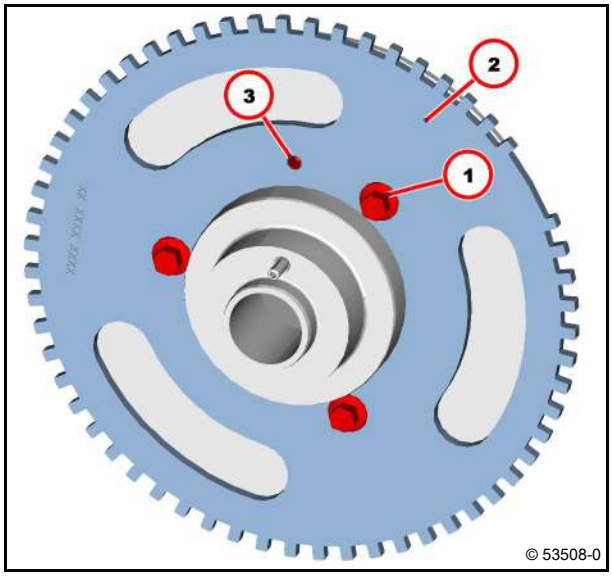

V-belt

Installing the sensor wheel

- Press in the new clamping pin (1) to the end stop.

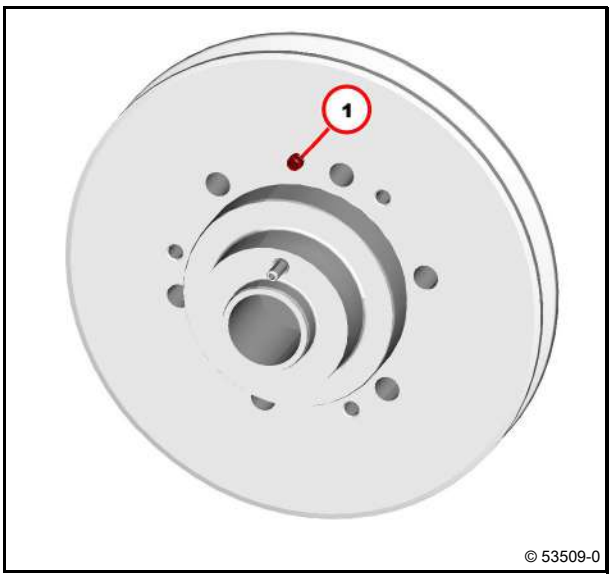

- Position sensor wheel (1).

Bore (2) and clamping pin (3) must be in alignment.

- Press in sensor wheel (1).

Attention!
Do not deform or damage sensor wheel.

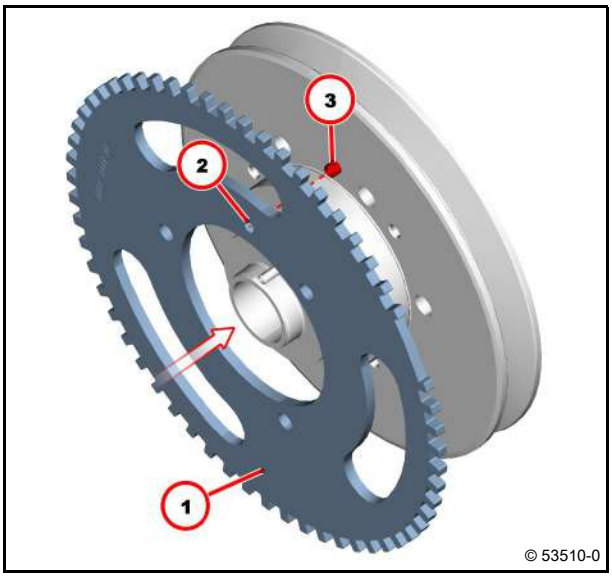

- Insert screws with locking agent.
- Tighten screws (1).

13 Nm

- Install V-belt pulley.

Module 05

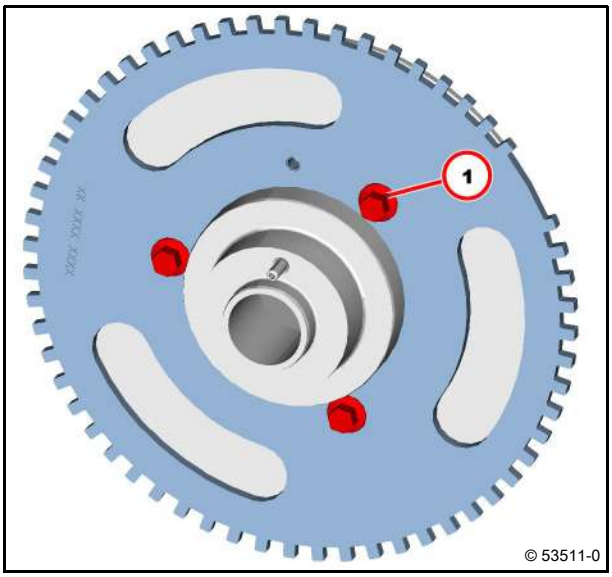

Technical Data

Tightening specifications

ID no.	Name	Screw type	Notes / Remark	Value
A05 032	Sensor wheel on V-belt pulley		Insert with DEUTZ DW 72 locking agent.	13 Nm

For the tightening procedure according to torque using a torque wrench, a maximum variation of the tightening torque of +/- 10% is permissible.

V-belt pulley

Standard tools

– Safety information / User information

1 V-belt pulley
2 Adapter
3 Hexagon head screw 60 Nm

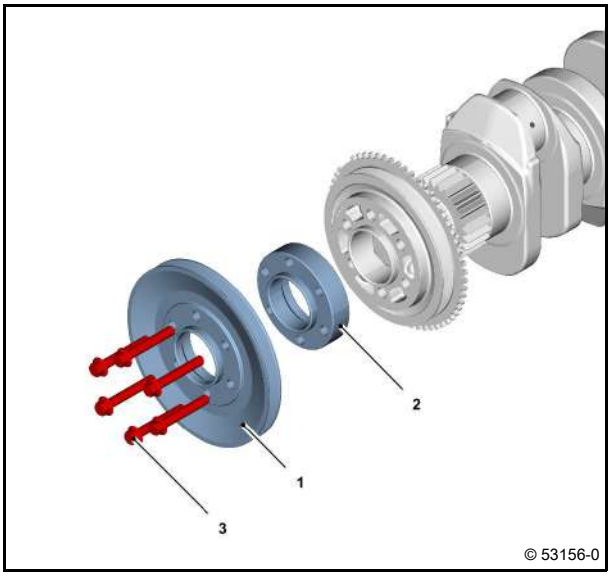

Removing and installing the cylinder head cover

Standard tools

– Safety information / User information

– Fitting compound DEUTZ AP1908

Removing cylinder head

1 Cylinder head cowling
2 Seal
3 Screw
4 Filler lock
5 Plug piece

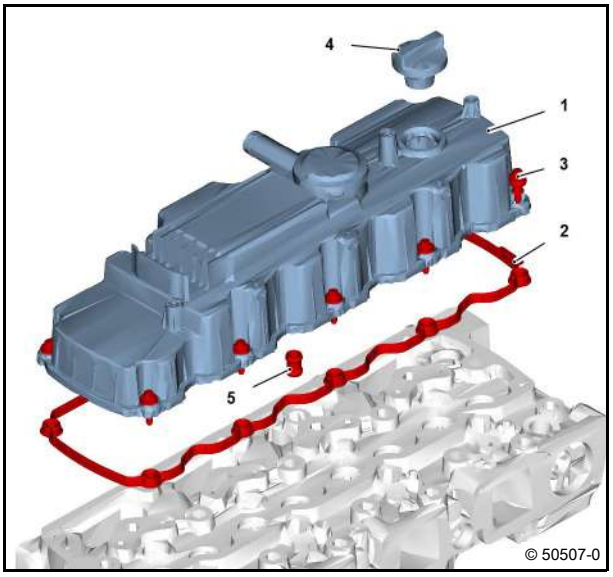

- Removing the crankcase breather.
  Module 01
- Unscrew screws (1).
- Remove cylinder head cowling (2).

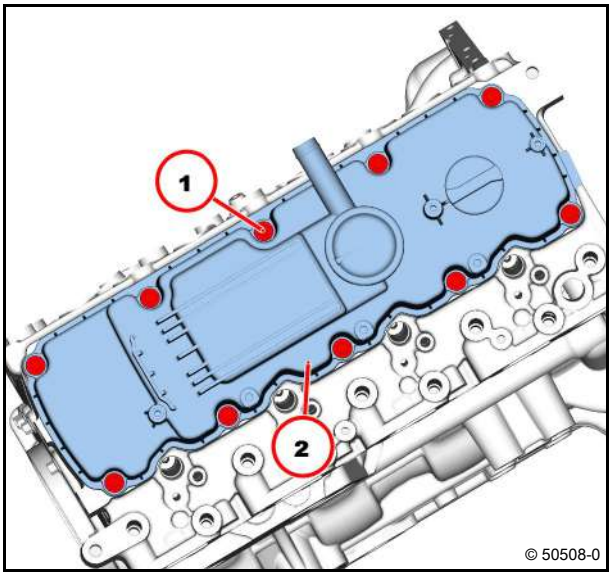

- Pull out plug element (1).

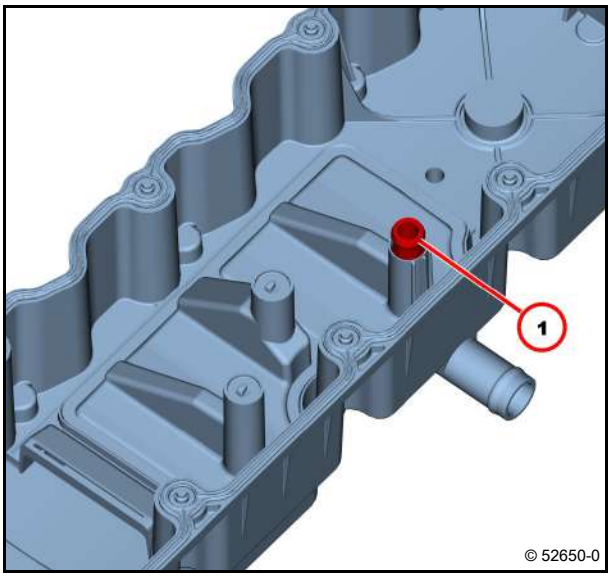

- Remove gasket (1).
- Visually inspect the components.

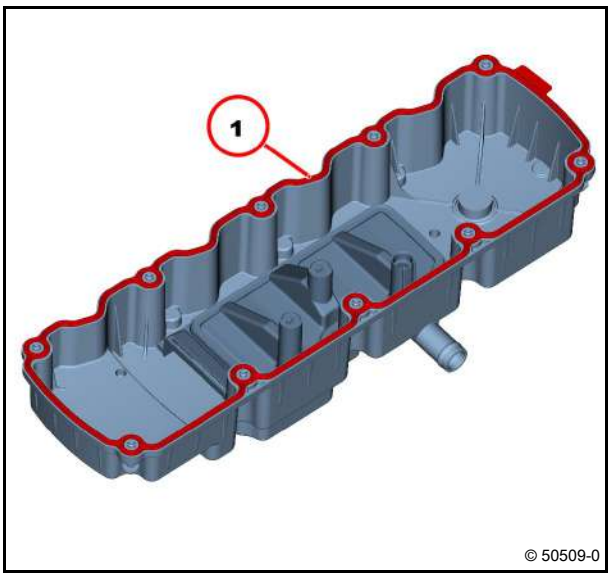

Installing cylinder head cover.

- Mount new gasket (1).

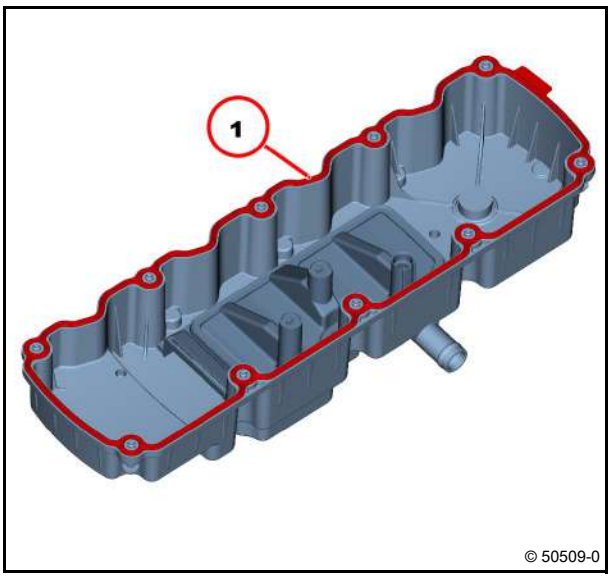

- Coat new plug piece (1) with mounting compound.

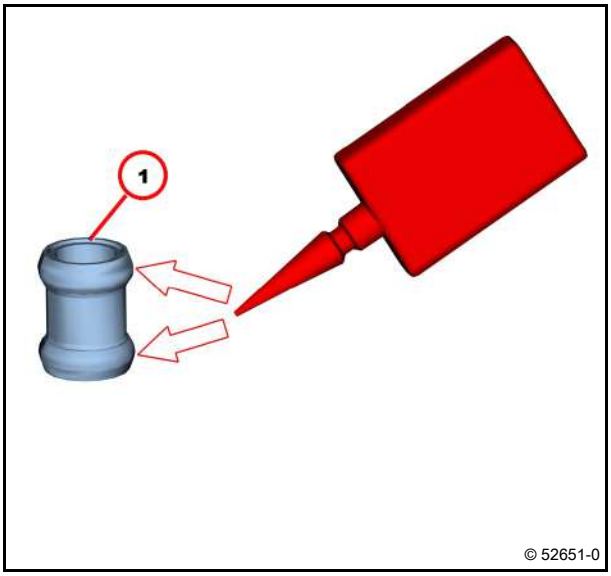

- Insert new plug piece (1).

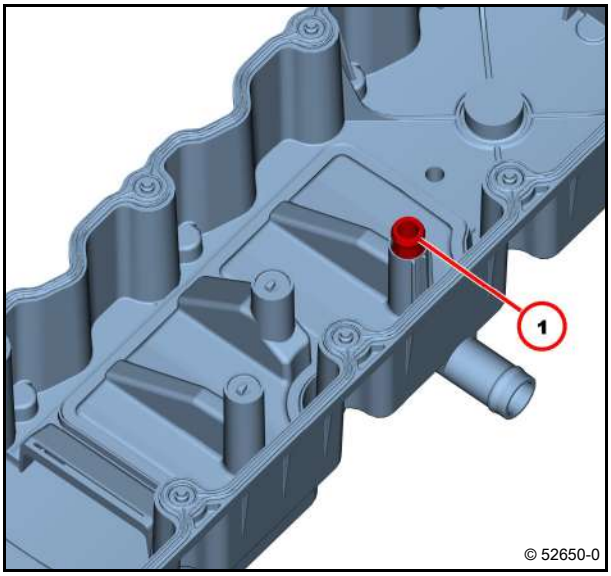

- Mount cylinder head cover (1).

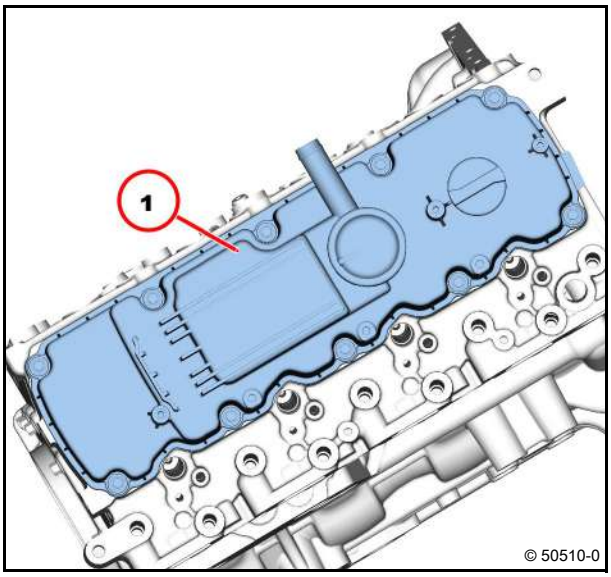

- Tighten the screws according to the tightening sequence.

  8.5 Nm

- Install crankcase breather.

  Module 01

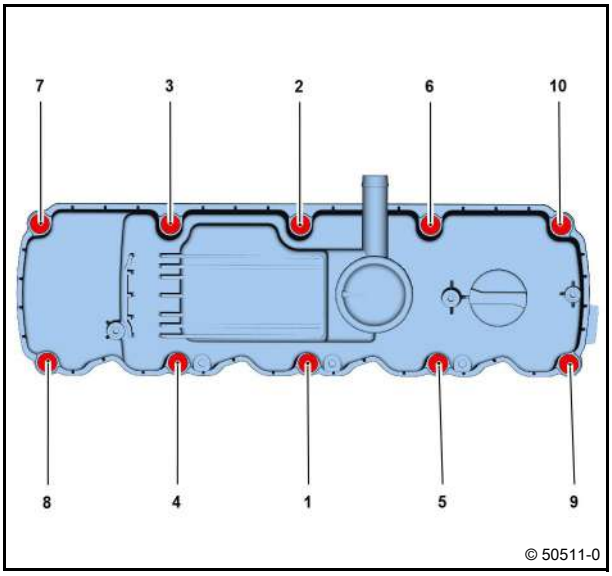

Technical Data

Tightening specifications

ID no.	Name	Screw type	Notes / Remark	Value
A08 004	Cylinder head cover on cylinder head			8.5 Nm

For the tightening procedure according to torque using a torque wrench, a maximum variation of the tightening torque of +/- 10% is permissible.

Renewing the crankshaft sealing ring (opposite side to flywheel)

Standard tools

Special tools:

– Pricker	01899103
– Assembly lever	01899110
– Assembly tool	02992452

– Self-tapping screw
– Washer

– Safety information / User information

Attention!
The crankshaft sealing ring is coated in wax at the factory.
Do not lubricate the crankshaft sealing ring.

Removing the crankshaft sealing ring

- Remove ribbed / V belt pulley.

  Module 05

- Make a hole of approximately 3 mm in the crankshaft sealing ring with a pricker.

Attention!
Do not damage the gearcase cover and crankshaft.

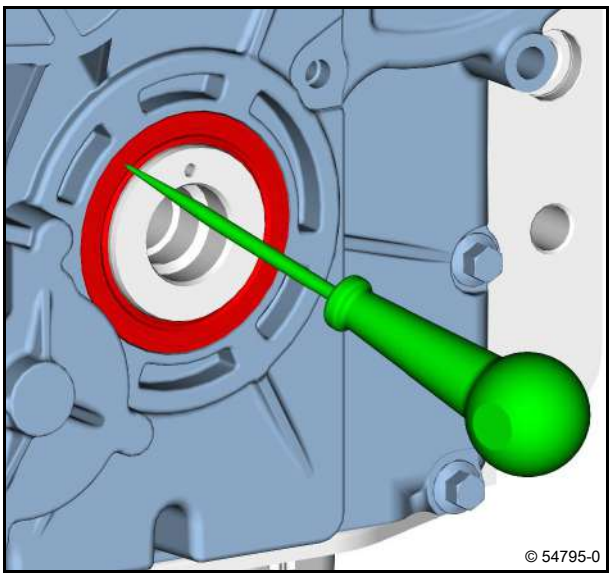

- Screw in a self-tapping screw (1) with washer.

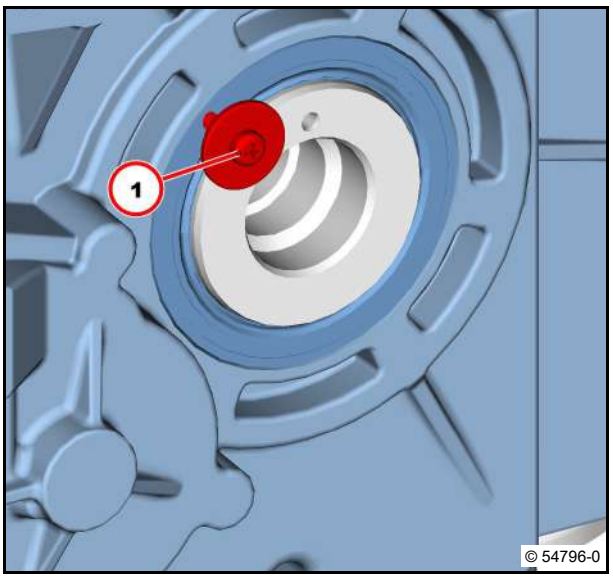

- Tighten auxiliary screw (1).

Attention!
Do not use installation levers on the gearcase.

- Pull out the crankshaft sealing ring with assembly lever.
- Visually inspect the crankshaft sealing ring running surface.
- Visually inspect all running surfaces.

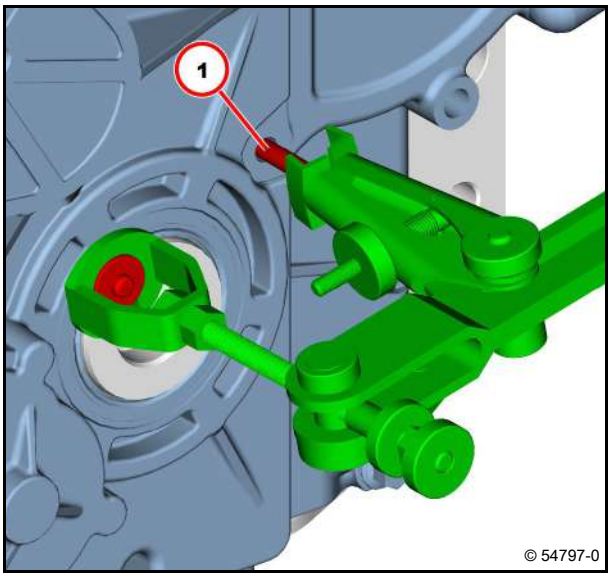

Installing the crankshaft sealing ring

- Place new crankshaft sealing ring on guide (1).

Attention!
The crankshaft sealing ring is coated in wax at the factory.
Do not lubricate the crankshaft sealing ring.

The sealing lip (2) faces the crankcase.

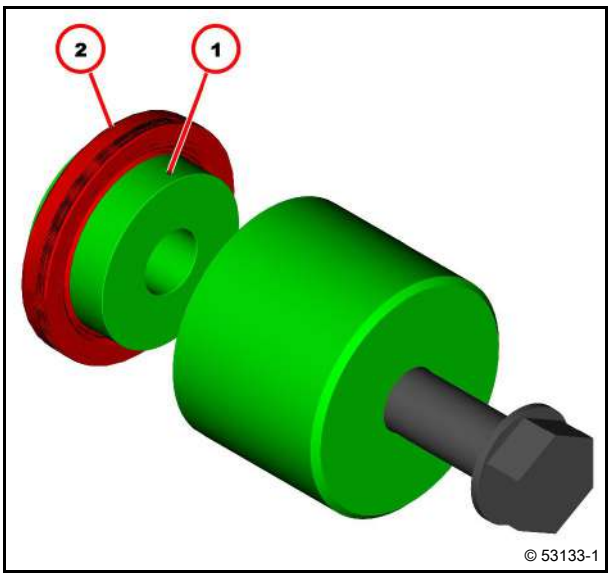

- Attach guide (1).

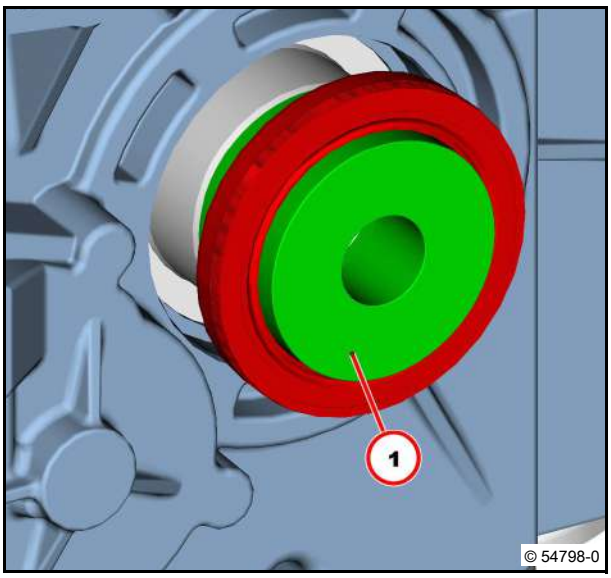

– Repair stage:

If there is a groove on the crankshaft journal, it is possible to fit the crankshaft sealing ring in a further installation depth (repair stage).

- Mount shim (1).

The installation depth is determined by the assembly tool.

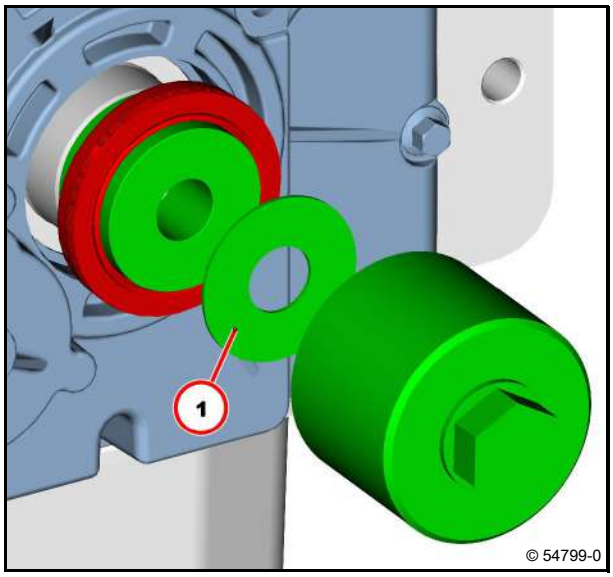

- Mount assembly sleeve (1).
- Fasten screw (2).
- Tighten the screw (2) to the end stop.

The installation depth is determined by the assembly tool.

- Unscrew screw (2).
- Remove assembly tool.
- Install ribbed / V belt pulley.

Module 05

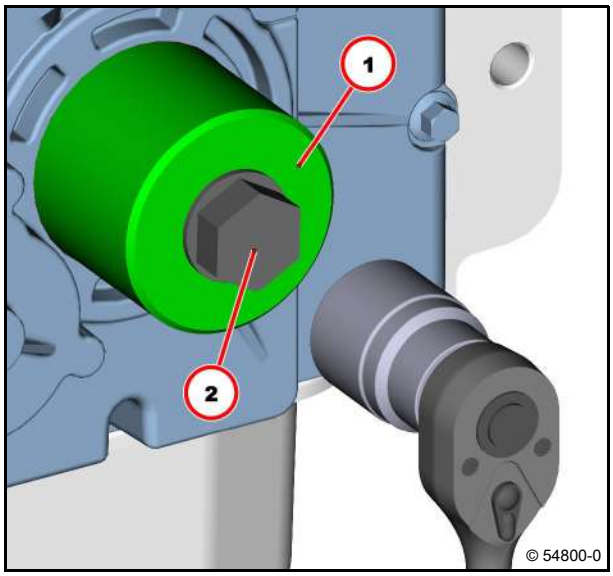

Control valve

Standard tools

– Safety information / User information

1	Gear case	
2	Valve piston	
3	Valve spring	
4	Spring plate	60 Nm
5	O-ring	
6	Clamping pin	
7	Threaded insert	
8	Profile seal	

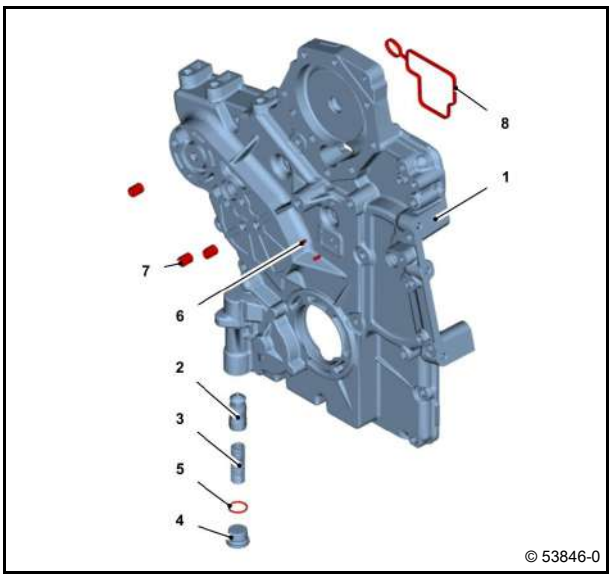

Use new round sealing ring.

Position	
8	Profile seal

Module 09

Removing and installing the gearcase

Removing and installing the lubricating oil cooler

Standard tools

Collect leaking operating substances in suitable vessels and dispose of according to regulations.
The appropriate operating manual should be observed for emptying and filling the engine.

Removing the lubricating oil cooler

1 Lubricating oil cooler
2 Seal
3 Hexagon head screw

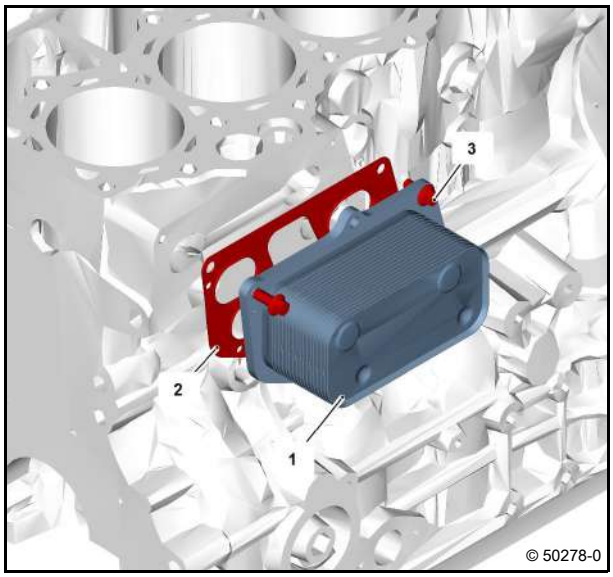

- Unscrew all screws (1).
- Remove lubricating oil cooler (2).
- Remove gasket (3).

Collect draining lubricating oil and dispose of properly.

- Visually inspect the components.

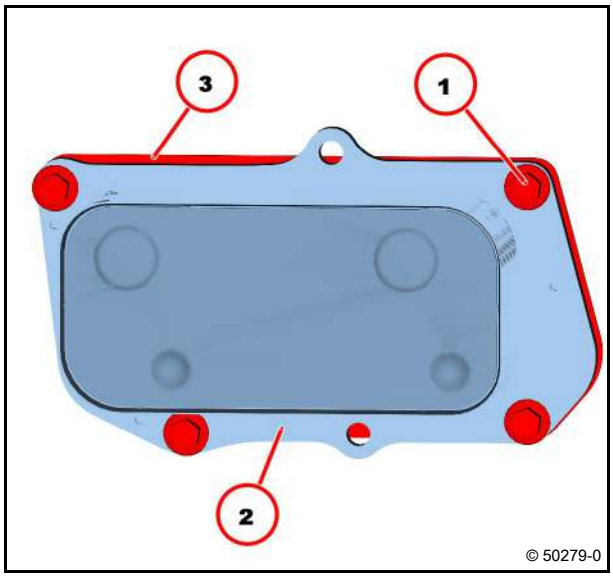

Installing the lubricating oil cooler

- Visually inspect the components.
- Clean sealing surfaces.
- Turn in screws (arrows).
  M8x20-10.9
- Fasten new seal (1) on lubricant oil cooler housing with screws.

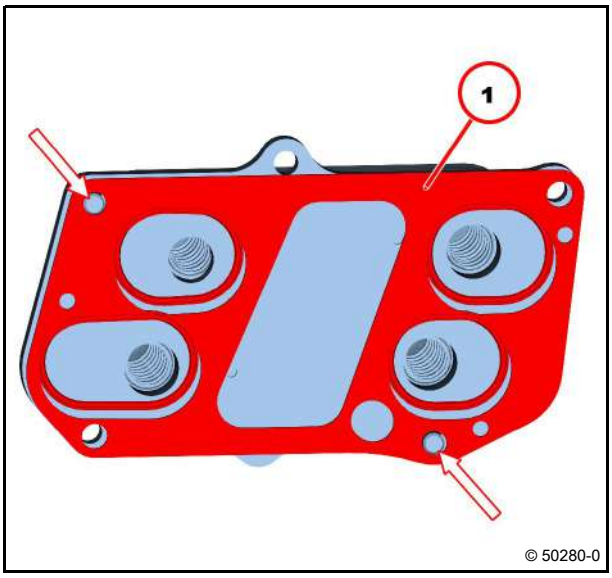

- Mount lubricating oil cooler (1).
- Tighten screws (2).
- Tighten all screws (2) alternately.

30 Nm

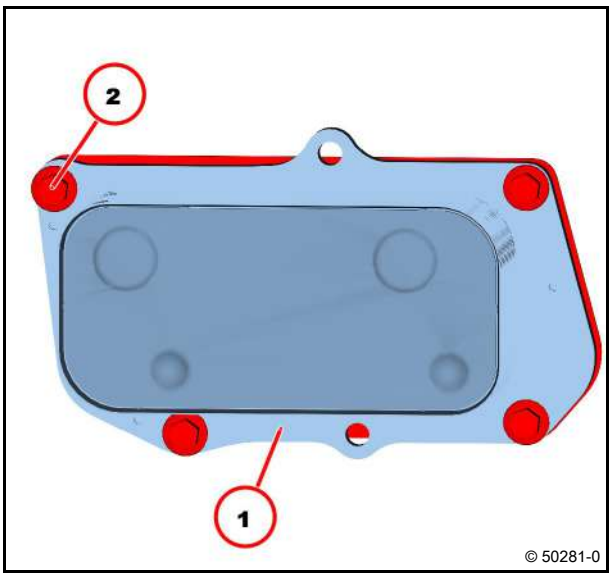

Technical Data

Tightening specifications

ID no.	Name	Screw type	Notes / Remark	Value
A15 051	Oil cooler housing on crankcase			30 Nm

For the tightening procedure according to torque using a torque wrench, a maximum variation of the tightening torque of +/- 10% is permissible.

Lubricant oil filter console

Standard tools

– Safety information / User information

Collect leaking operating substances in suitable vessels and dispose of according to regulations.

Observe the appropriate operating instructions for emptying and filling the engine.

1	Interchangeable filter	12 Nm
2	Threaded bush	40 Nm
3	Cover	
4	O-ring	
5	Hexagon head screw	30 Nm

Use new round sealing ring.

Position

2

Screwed in to the end stop.

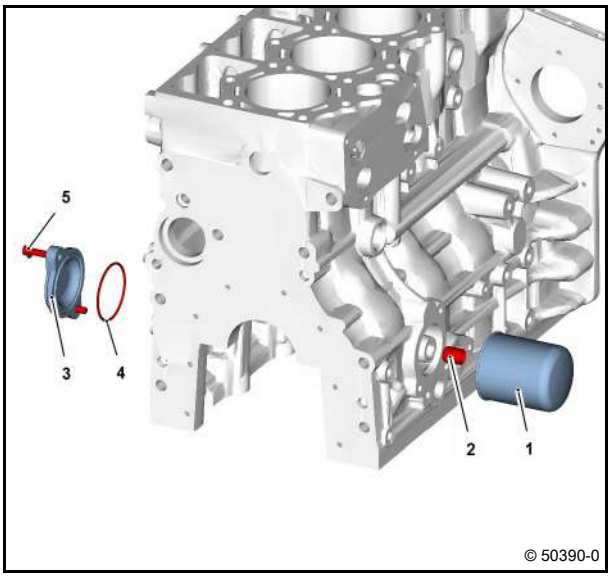

Removing and installing the oil suction pipe

Standard tools

– Packing compound
DEUTZ DW 73

Removing the oil suction pipe

1 Oil suction pipe
2 Torx screw
291 Packing compound

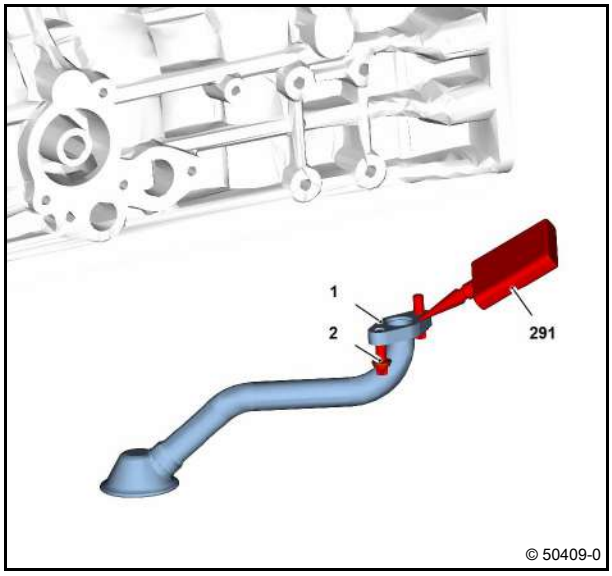

- Remove lubricating oil pan.
  Module 02
- Unscrew screws (1).
- Remove oil suction pipe (2).
- Visually inspect the component.

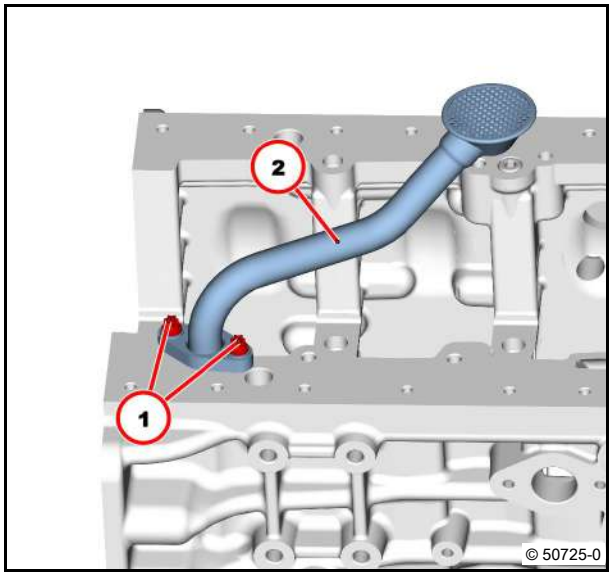

Installing the Oil Suction Pioppe

- Clean sealing surface.
- Apply sealing compound (1) evenly on the sealing surface.

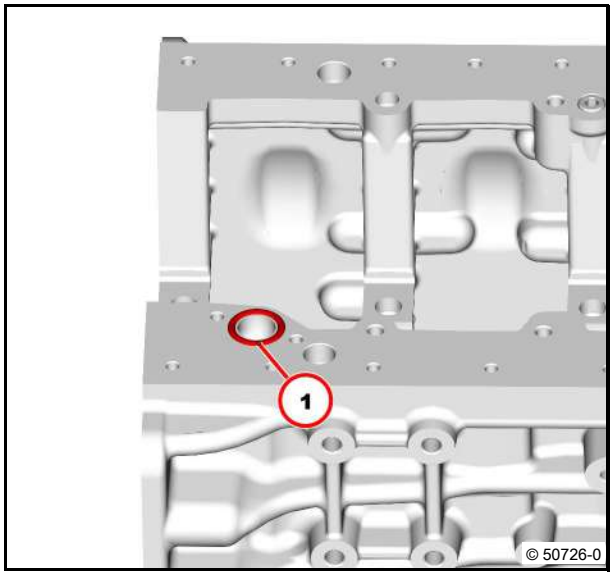

- Clean sealing surface.
- Install oil suction pipe (1).
- Tighten screws (2).

22 Nm

- Install lubricating oil pan.

Module 02

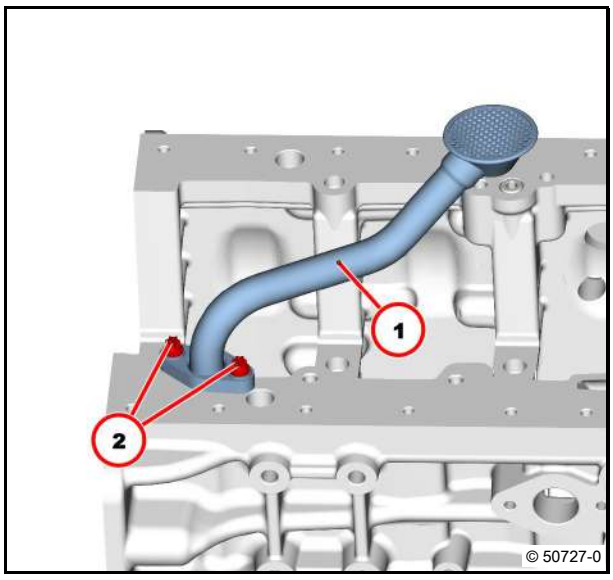

Technical Data

Tightening specifications

ID no.	Name	Screw type	Notes / Remark	Value
A16 015	Oil suction pipe on crankcase	M8x25-10.9		22 Nm

For the tightening procedure according to torque using a torque wrench, a maximum variation of the tightening torque of +/- 10% is permissible.

Removing and installing the lubricating oil line (exhaust turbocharger)

Standard tools

– Safety information / User information

Collect leaking operating substances in suitable vessels and dispose of according to regulations.

Observe the appropriate operating instructions for emptying and filling the engine.

Removing the lubricating oil line

1 Lubricating oil line
2 Hollow screw
3 Sealing ring

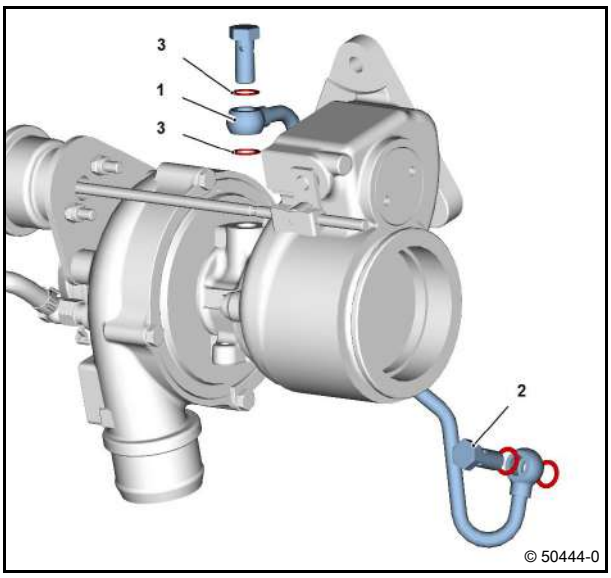

- Unscrew hollow screw (1).
- Remove sealing rings (2).

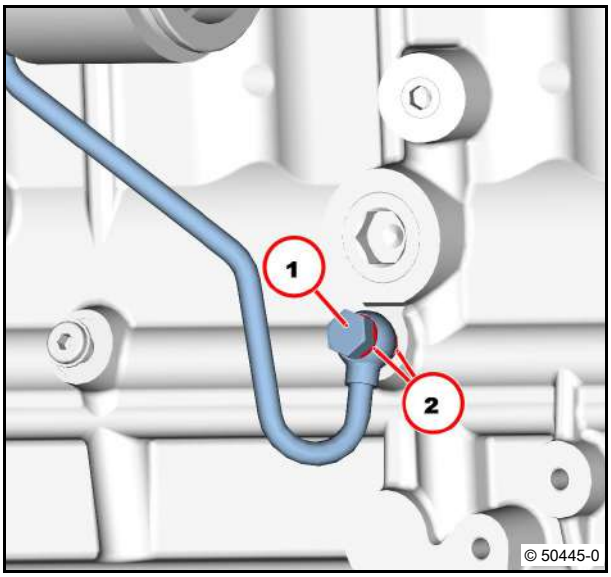

- Unscrew hollow screw (1).
- Remove sealing rings (2).
- Remove lubricating oil pipe (3).

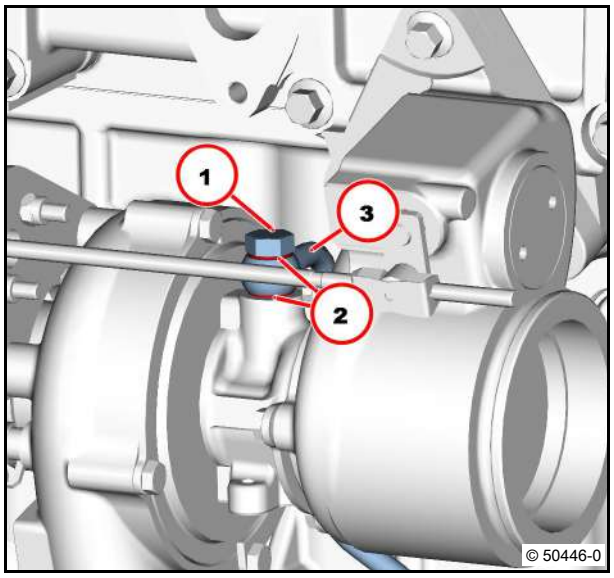

Installing the lubricating oil line

- Clean sealing surfaces.
- Mount lubrication oil line (1).
- Mount sealing rings (2).
- Screw on hollow screw (3).

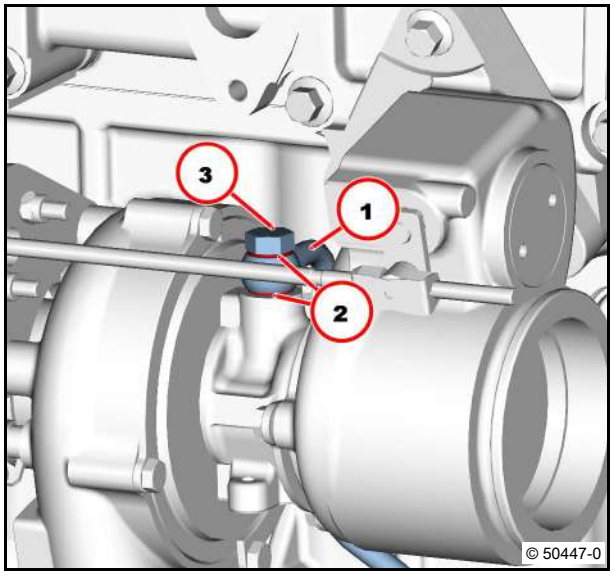

- Clean sealing surfaces.
- Mount lubrication oil line (1).
- Mount sealing rings (2).
- Tighten hollow screw (3).

18 Nm

Attention!
Install tension-free.

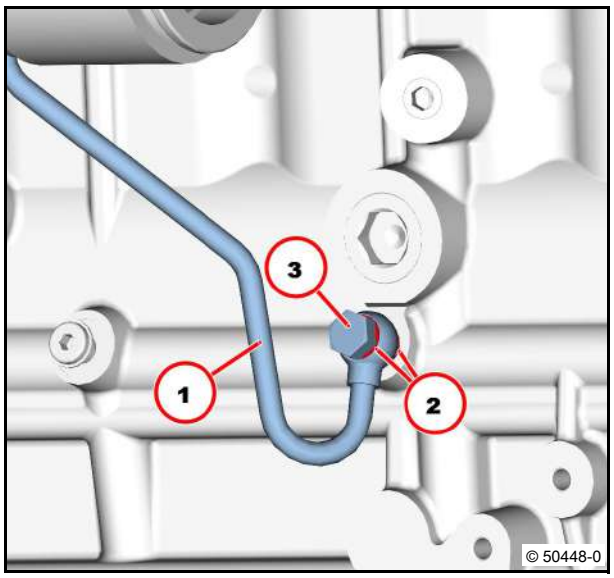

- Tighten hollow screw (1).

18 Nm

Attention!
Install tension-free.

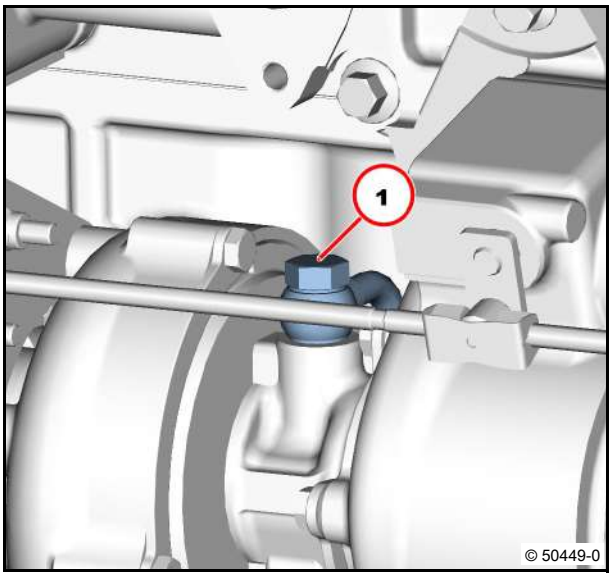

Technical Data

Tightening specifications

ID no.	Name	Screw type	Notes / Remark	Value
A43 047	Lubricating oil pipe on exhaust turbocharger	Hollow screw	Use new sealing rings	18 Nm
A43 048	Lubricating oil line on crankcase	Hollow screw	Use new sealing rings	18 Nm

For the tightening procedure according to torque using a torque wrench, a maximum variation of the tightening torque of +/- 10% is permissible.

Removing and installing the lubricating oil return line (exhaust turbocharger)

Standard tools

Special tools:
– Disassembly tool 02992127

– Fitting compound DEUTZ AP1908

Collect leaking operating substances in suitable vessels and dispose of according to regulations.

Observe the appropriate operating instructions for emptying and filling the engine.

Removing the oil return line

1 Fastening flange
2 O-ring
3 Oil return line
4 O-ring
5 Hexagon head screw
6 Hexagon head screw
7 Seal

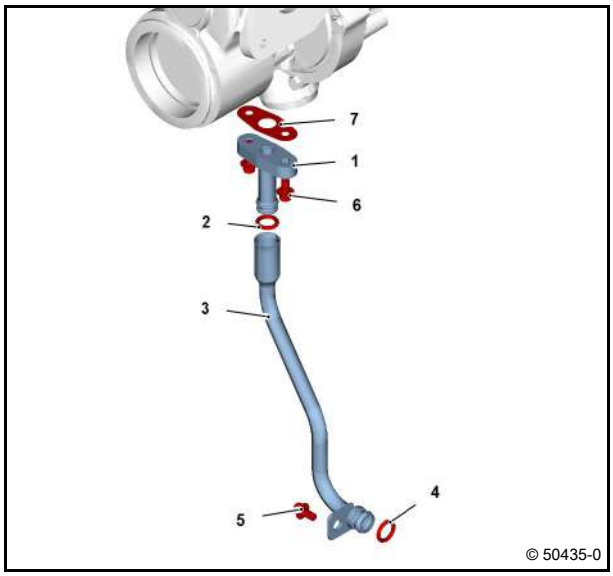

- Unscrew screws (1).
- Remove gasket (2).

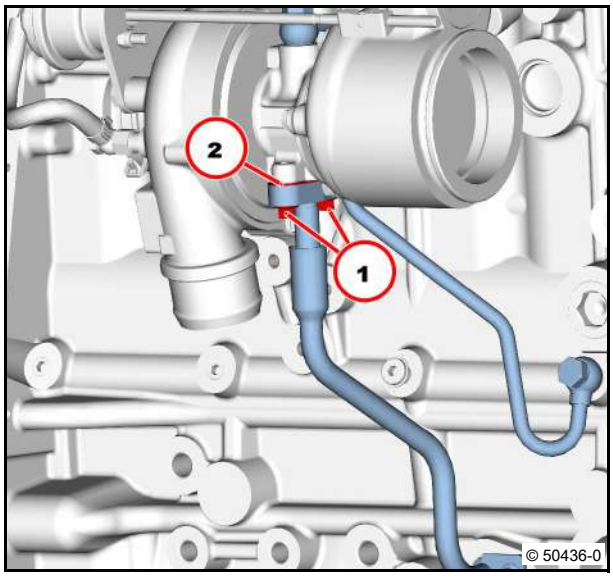

- Unscrew screw (1).
- Pull out oil return line (2) in direction of arrow.

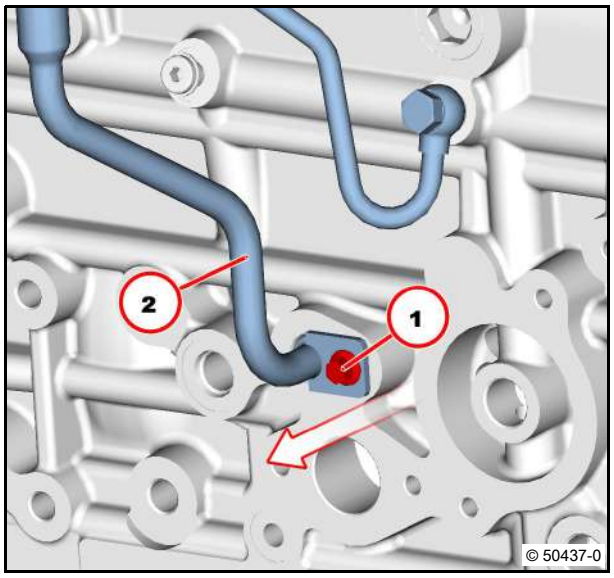

- Remove flange (1) in direction of arrow.
- Remove round sealing ring (2) with disassembly tool.
- Visually inspect the component.

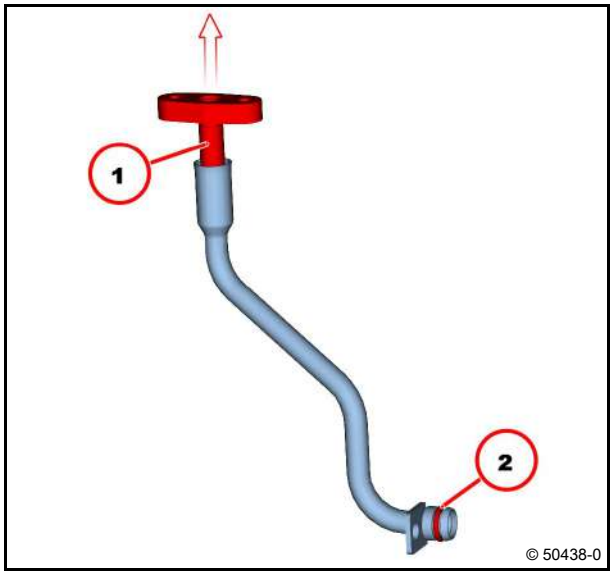

- Remove the O-ring (1) with the disassembly tool.
- Visually inspect the component.

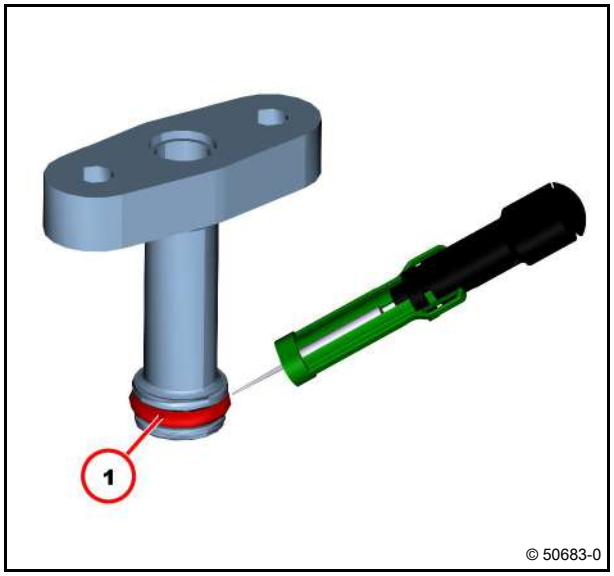

Mounting the oil return line

- Clean sealing surfaces.
- Lightly coat new round sealing ring with DEUTZ AP1908 mounting compound.
- Insert new O-ring (1).

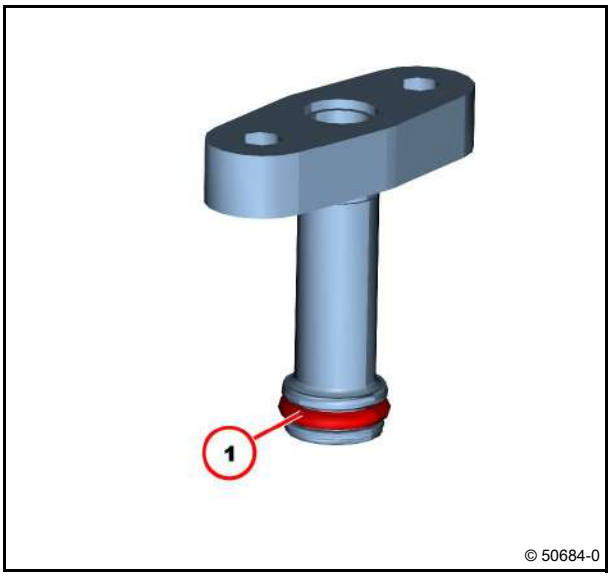

- Clean sealing surfaces.
- Lightly coat new round sealing ring with DEUTZ AP1908 mounting compound.
- Insert new O-ring (1).
- Insert flange (2) in direction of arrow.

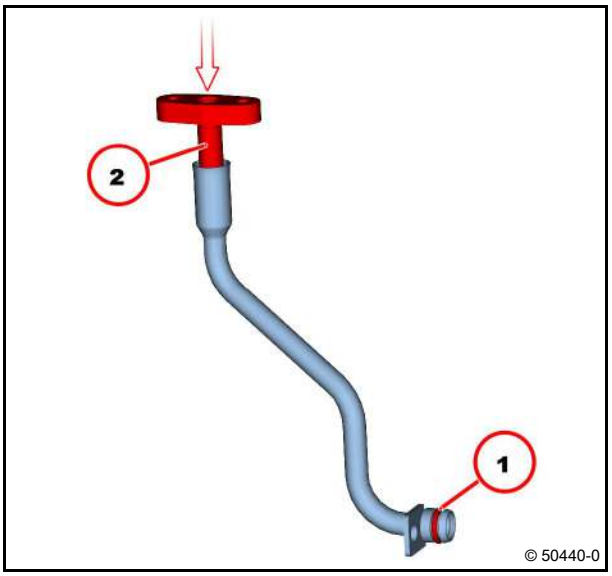

- Clean sealing surfaces.
- Mount oil return pipe (1).
- Insert oil return line (1) in direction of arrow.
- Fasten screw (2).

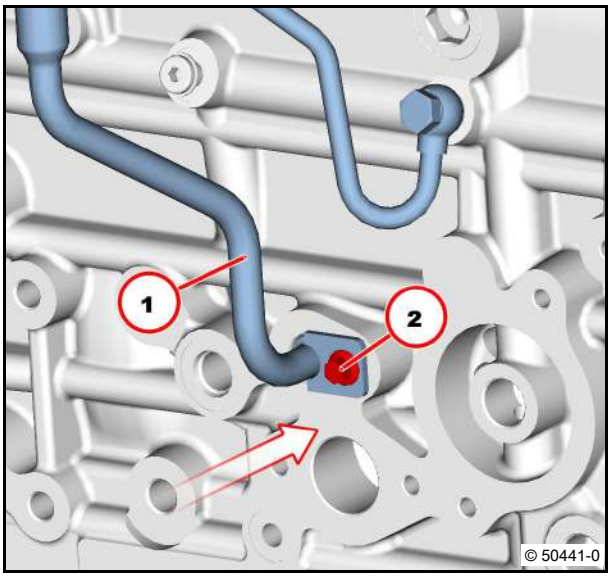

- Clean sealing surfaces.
- Mount gasket (1).
- Mount oil return pipe (2).
- Tighten screws (3).

8.5 Nm

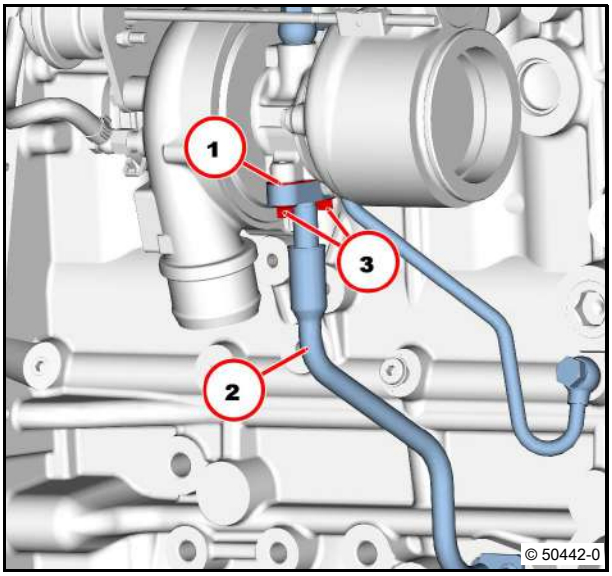

- Tighten screw (1).

8.5 Nm

Attention!
Install tension-free.

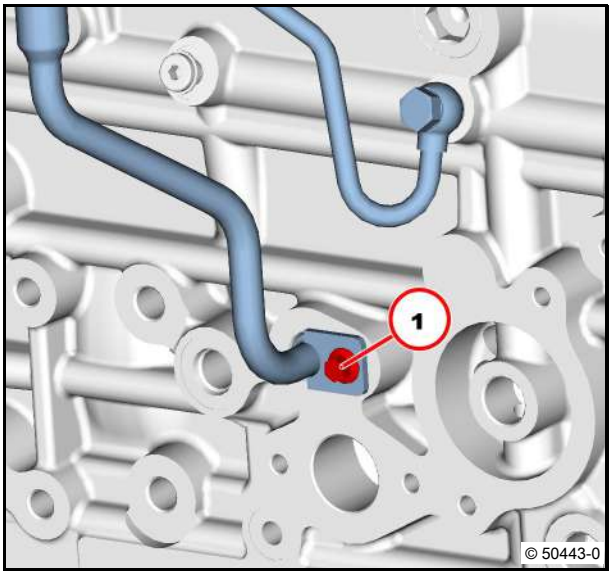

Technical Data

Tightening specifications

ID no.	Name	Screw type	Notes / Remark	Value
A43 044	Oil return line on exhaust turbocharger			8.5 Nm
A43 046	Oil return line on crankcase			8.5 Nm

For the tightening procedure according to torque using a torque wrench, a maximum variation of the tightening torque of +/- 10% is permissible.

Lubricating oil line

Standard tools

– Safety information / User information

1 Lubricating oil line
2 Hollow screw 30 Nm
3 Sealing rings

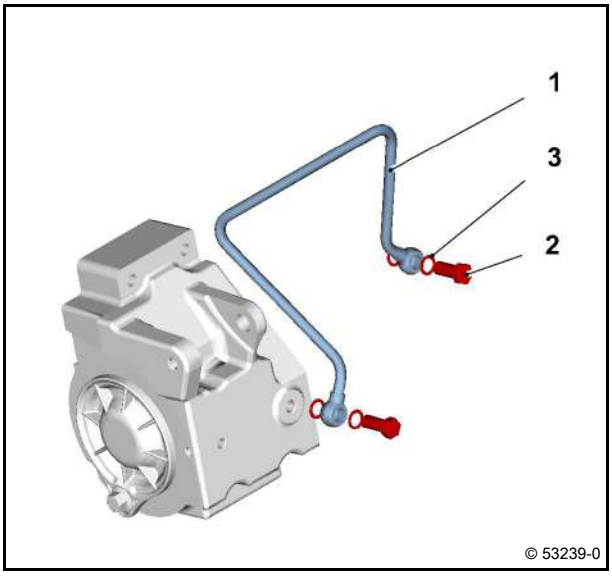

Attention!
Ensure that the installation location is free from faults.
Install line without tension!

Use new sealing rings.

Removing and installing the high-pressure pump

Standard tools:
– Separating tool

Special tools:

– Plugs/caps	01899144
– Disassembly tool	02992127
– Special wrench	02992477

– Mirror
– Marker pen, waterproof, permanent
– Mounting compound 01008420

– Safety information / User information

Danger!

Do not carry out work on the fuel system when the engine is running.
The fuel system is under high pressure - Danger of death.

The fuel pressure can continuously remain up to several 100 bar even after stopping the engine.
Here the fuel pressure is only reduced if the fuel system is opened and the fuel can escape outside.

Attention!

Ensure utmost cleanliness for all work.
Remove any paint residue and dirt particles before disassembly.
Clean the area around the components concerned carefully. Blow wet parts dry with compressed air.
Observe the safety regulations and national specifications for handling fuels.
Close all connections immediately after opening with new, clean plugs/caps.
Do not remove plugs/caps until immediately before assembling.
Collect leaking operating substances in suitable vessels and dispose of according to regulations.

Removing the high-pressure pump

1 High-pressure pump
2 Spacer
3 Hexagonal nut
4 Washer
5 O-ring
6 Hexagonal nut
7 O-ring
8 Overflow valve
9 O-ring
10 O-ring
11 Flow control valve
12 O-ring
13 Seal
293 Mounting compound

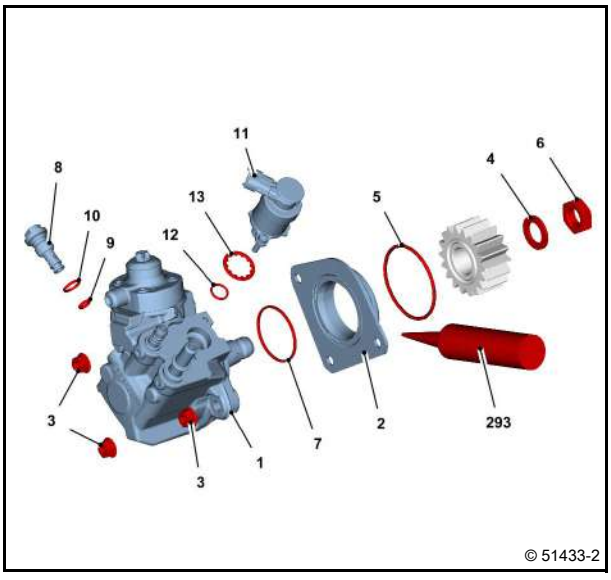

- Unlock cable plug and remove.

- Remove high-pressure line.
- Remove fuel pipes.

  Module 21

- Unscrew locking screw (1).
- Remove sealing ring.

  Module 09

- Install turning gear / locking device.

  Modules 44, 49

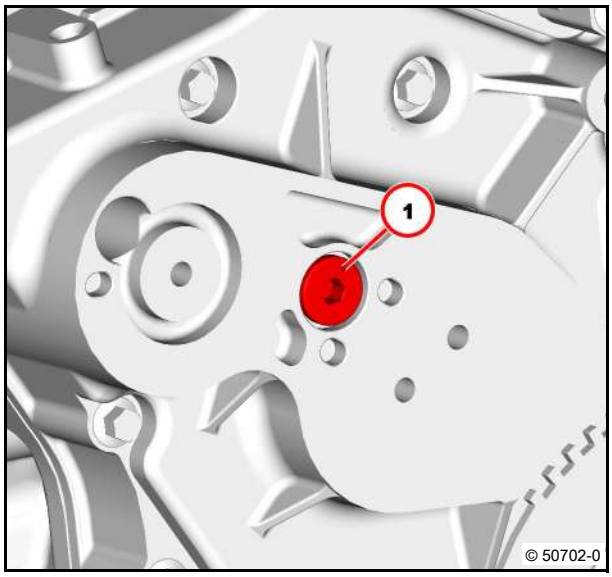

- Turn crankshaft in engine direction of rotation until marking is visible.

  (1) Marking high-pressure pump gear wheel

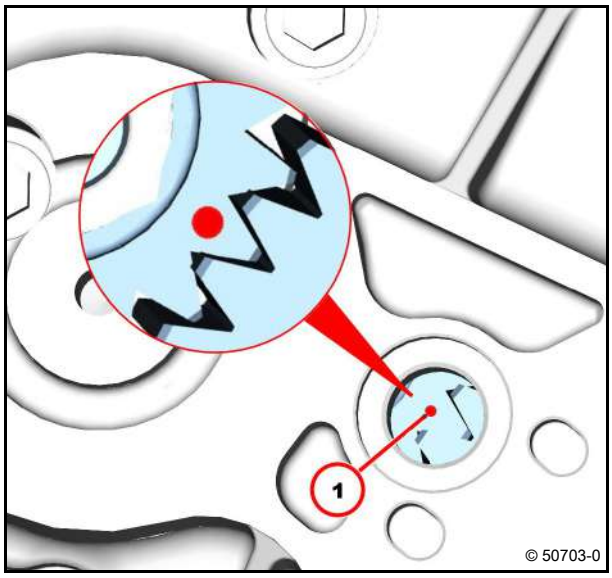

- Apply help marking (1).

  High-pressure pump gear wheel and intermediate gear

Attention!
Do not turn the crankshaft any more!

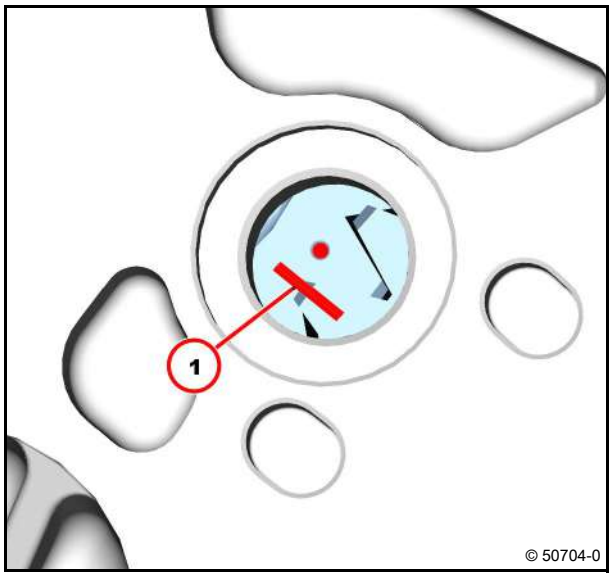

- Unscrew nuts (1).

Attention!
Do not twist the high-pressure pump.
Do not twist the spacer.
Do not damage the components.

- Remove high-pressure pump (2).

Attention!
Do not turn the crankshaft any more!

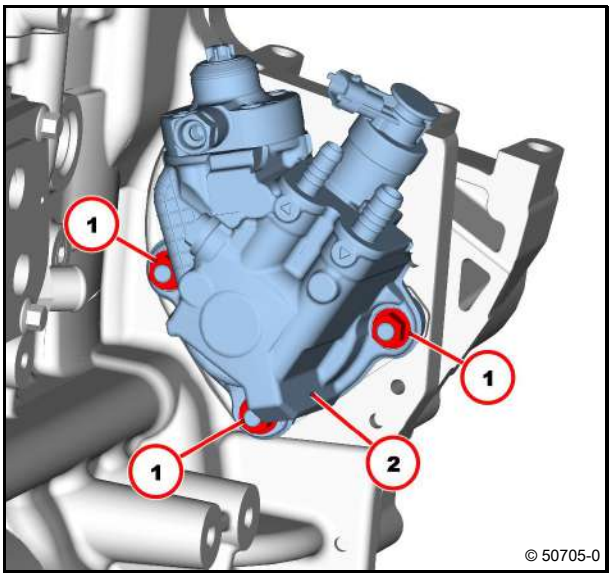

Attention!
Do not damage the high-pressure pump gear wheel.

Use a suitable tool.

- Hold high-pressure pump gear wheel (1).
- Unscrew nut (2).
- Remove washer (3).
- Pull off high-pressure pump gear wheel (1) with separating tool.
- Remove spacer (4).
- Visually inspect the components.

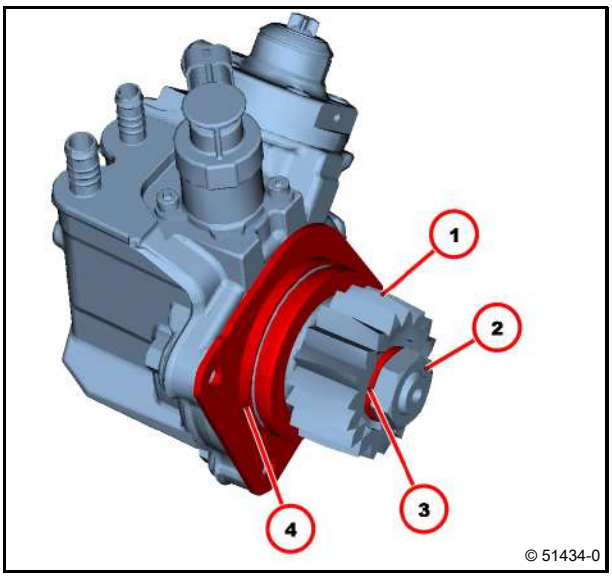

- Remove the O-rings (1) with the disassembly tool.

Attention!
All the help markings must be transferred when renewing/changing a part.
Do not turn the crankshaft any more!

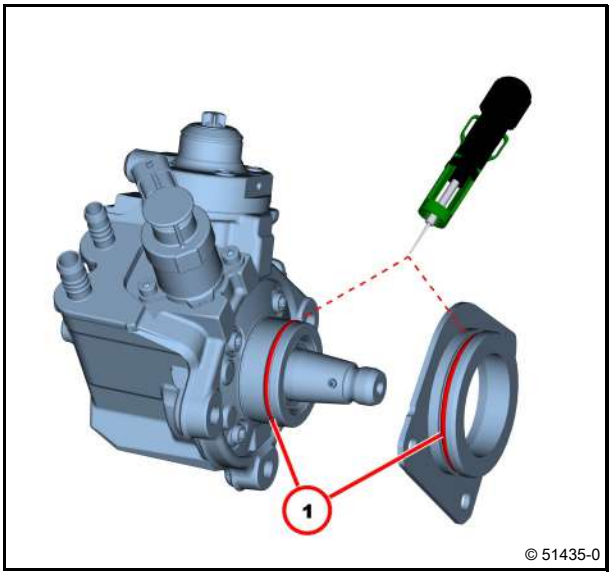

Installing the high-pressure pump

- Clean sealing surfaces.
- Mount new O-rings (1).
- Push on spacer (2).

Attention!
Ensure that the installation location is free from faults.
Recess (3) is on the fuel supply side.

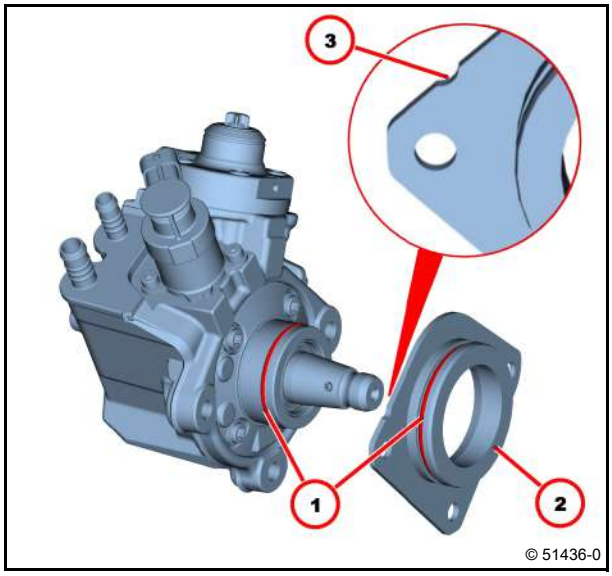

- Mount high-pressure pump gear wheel (1).

Attention!
Pay attention to installation position.

(2) Surrounding groove
(3) Marking

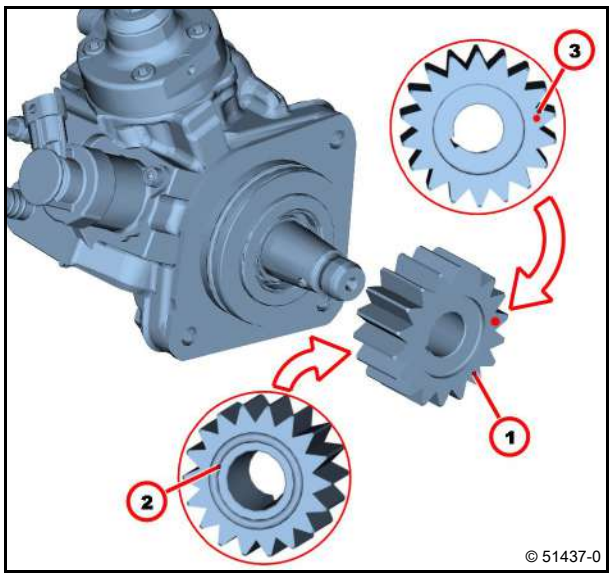

Attention!
Ensure that the installation location is free from faults.
Do not damage the high-pressure pump gear wheel.
The clamping pin (1) must engage in the groove (2).

- Fit washer (3).
- Screw on nut (4).

Use a suitable tool.

- Hold high-pressure pump gear wheel (5).
- Tighten nuts (4).

80 Nm

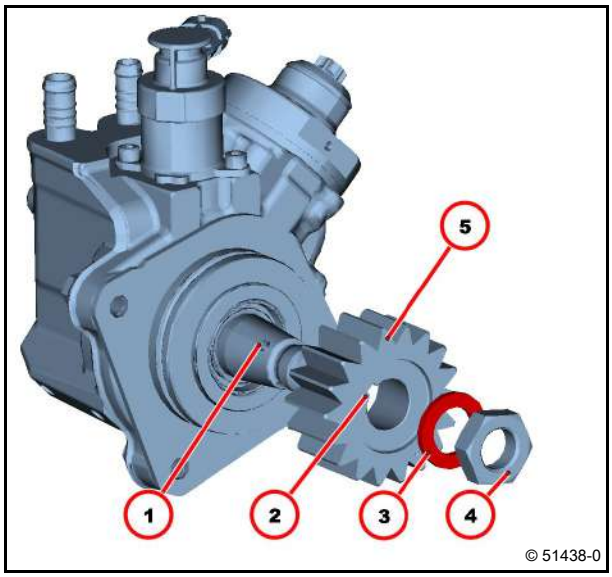

- Coat the O-ring (1) with fitting compound.
- Coat bordering surfaces of the spacer (2) with mounting compound.

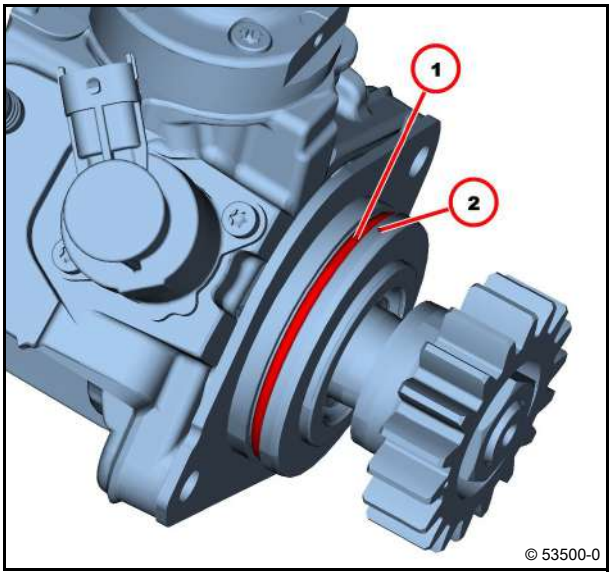

Attention!
Observe direction of rotation of the high-pressure pump drive!
Observe position of the drive shaft and high-pressure pump.

(1) Marking high-pressure pump gear wheel

View	Direction of rotation
On high-pressure pump drive	right (clockwise)

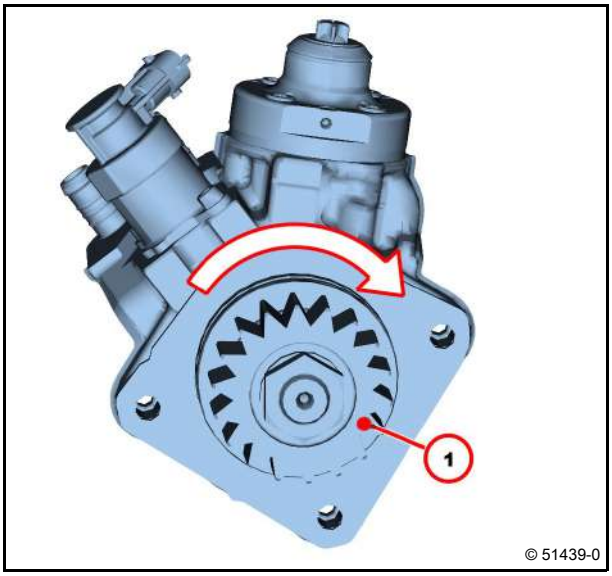

Attention!
Dry running is not permissible.
Sufficient fuel pressure must be available at the high-pressure pump.

Fuel pressure at the supply: at least 3.2 bar

- Install high-pressure pump.

Markings must be visible.
Help marking must match.

(1) Marking high-pressure pump gear wheel
(2) Help marking high-pressure pump gear wheel and intermediate gear

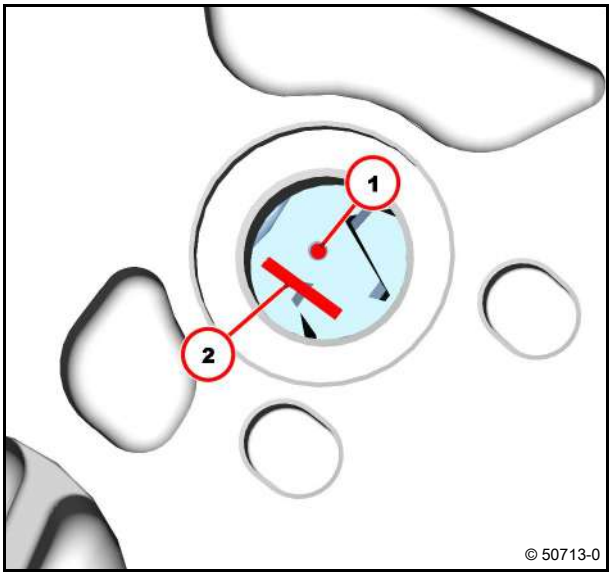

High-pressure pump

Attention!

Do not twist the high-pressure pump.

- Screw on nuts (1).
- Tighten nuts (1).

20 Nm

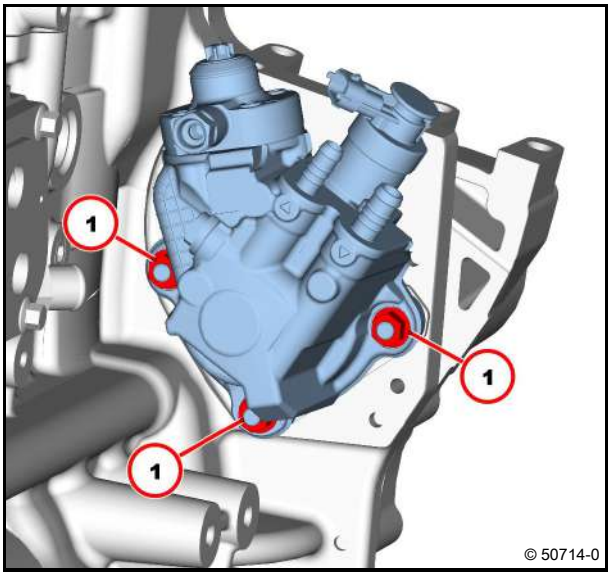

- Mount locking screw (1).

Use a new sealing ring.

- Tighten screw plug (1).

55 Nm

Module 09

- Install fuel pipes.
- Fit new high-pressure line.

Module 21

- Plug in and lock cable plug.
- Remove turning gear / locking device.

Modules 44, 49

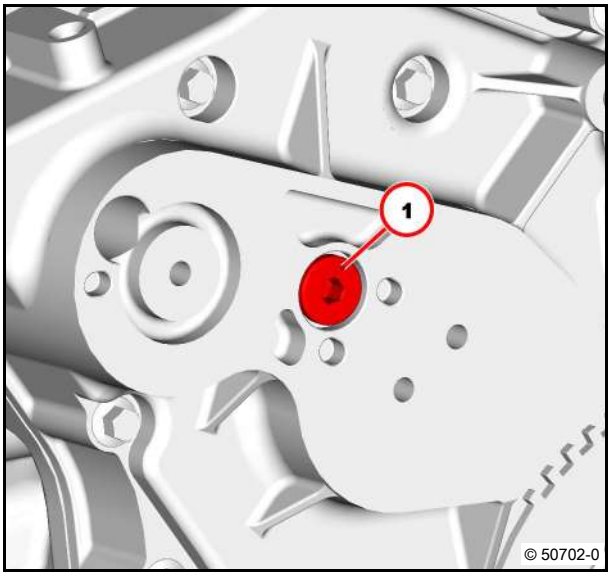

Technical Data

Tightening specifications

ID no.	Name	Screw type	Notes / Remark	Value
A17 004	High-pressure pump gear wheel and high-pressure pump drive shaft		Hold high-pressure pump gear wheel.	80 Nm
A17 031	High-pressure pump on crankcase			20 Nm

For the tightening procedure according to torque using a torque wrench, a maximum variation of the tightening torque of +/- 10% is permissible.

Removing and installing the injector

Standard tools

Special tools:

– Diagnostic tool SerDia 2010	
– Assembly pliers	01899050
– Torx tool set	01899092
– Plugs/caps	01899144
– Lever tool	02992117
– Disassembly tool	02992127
– Extraction tool	02992138
– Slide hammer	02992294

– Safety information / User information
– Operation manual
– Service Bulletin
– SerDia manual 2010

Danger!

Do not carry out work on the fuel system when the engine is running.
The fuel system is under high pressure - Danger of death.

The fuel pressure can continuously remain up to several 100 bar even after stopping the engine.
Here the fuel pressure is only reduced if the fuel system is opened and the fuel can escape outside.

Attention!

Ensure utmost cleanliness for all work.
Remove any paint residue and dirt particles before disassembly.
Clean the area around the components concerned carefully. Blow wet parts dry with compressed air.
Observe the safety regulations and national specifications for handling fuels.
Close all connections immediately after opening with new, clean plugs/caps.
Do not remove plugs/caps until immediately before assembling.
Collect leaking operating substances in suitable vessels and dispose of according to regulations.

Remove injector

1 Injector
2 Sealing disc
3 Clamping claw
4 Torx screw
5 Clip
6 O-ring

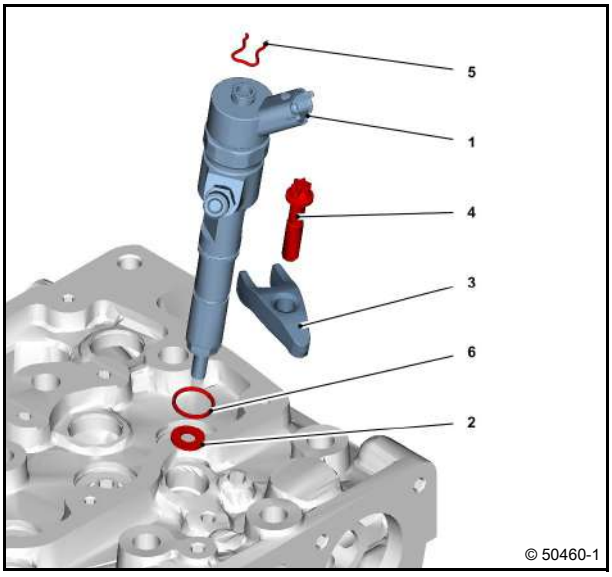

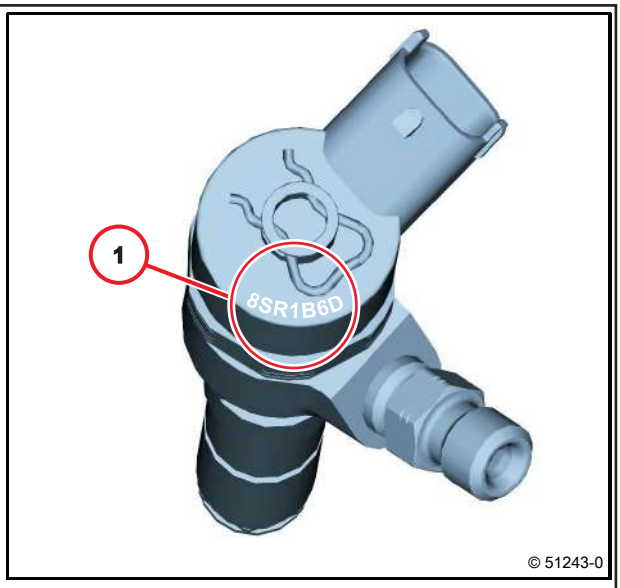

Attention!

Note assignment of the injector to the cylinder.
The injector is assigned by the relevant IMA code (1) to the corresponding cylinder.
The assignment is saved in the control unit.
Each time an injector is replaced/renewed, the correct assignment to the relevant cylinder must be made by transferring the new IMA code in the control unit.
Observe installed injection system!
The IMA codes of the different injection systems are basically different.
The injector calibration depends on the installed injection system.
The exact procedure can be taken from the listed documentation and must be observed.

Diagnostic tool SerDia 2010

SerDia manual

Report back changed data record to DEUTZ AG.

e-mail address:

service-kompaktmotoren.de@deutz.com

Service Bulletin

0199-99-11045

The following work procedure describes the removal and installation of an injector.

Proceed in the same way to remove further injectors.

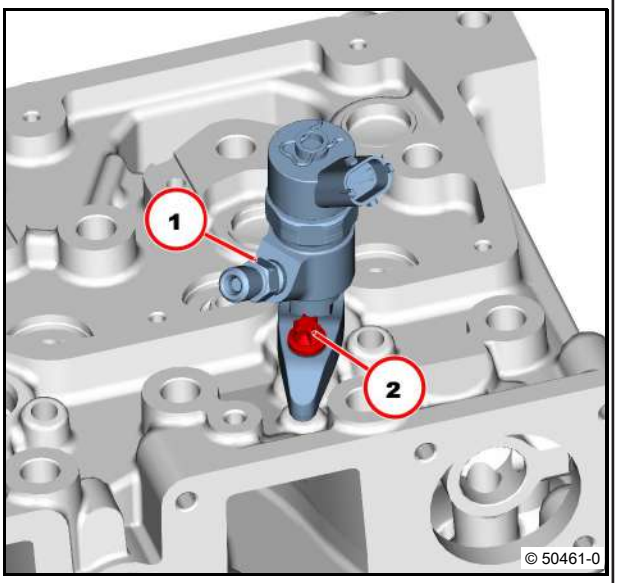

- Unlock cable plug and remove.
- Disconnect the fuel line from the injector.

Module 21

Attention!

Position (1):
The injector must be renewed if the pipe connection is disconnected.

- Hold pipe connection (1).
- Remove injection line.

Module 21

- Unscrew screw (2).

- Insert lever tool (1) in the clamping claw.
- Loosen the injector by moving the lever tool (1) in the direction of the arrow.
- Remove injector and clamping claw.

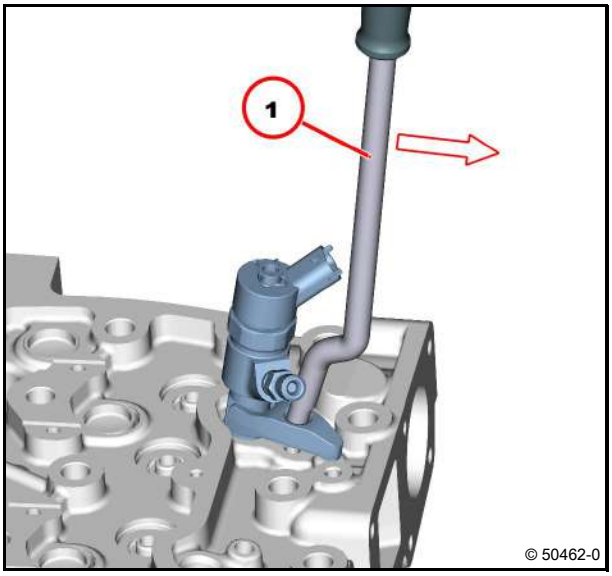

Attention!
Do not brush off the nozzle tip of the injector.
Do not damage nozzle head on the injector during disassembly of the sealing disc (1).

- Grip fixed sealing disc (1) using the assembly pliers (2) and pull off with slight turning movements.

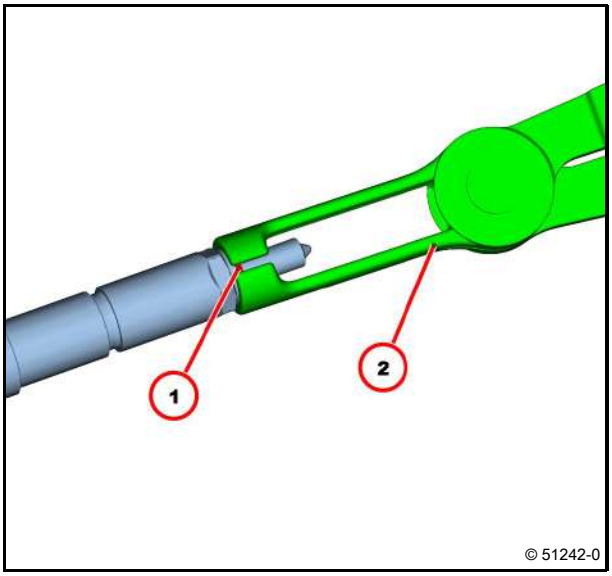

Attention!
Do not damage the injector.

- Remove the round sealing ring (1) carefully from the injector with the disassembly tool.

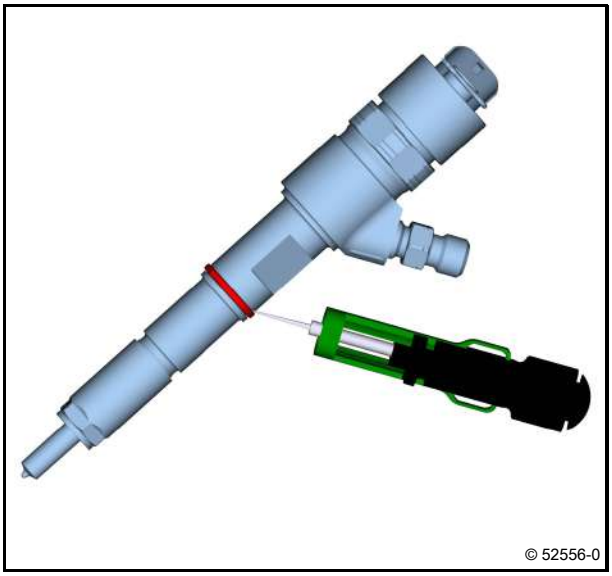

Removing fixed sealing disc at cylinder head

- Insert extraction device (1).

The supports (arrow) must rest in the bore of the sealing disc.

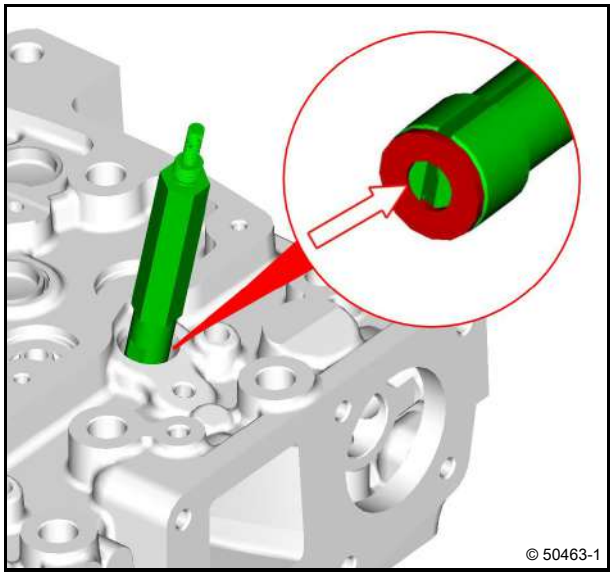

- Screw in spindle (1) until the sealing disc is fastened on the pull-out device.

Hold puller on hexagon.

- Install adapter (2) on disassembly device.

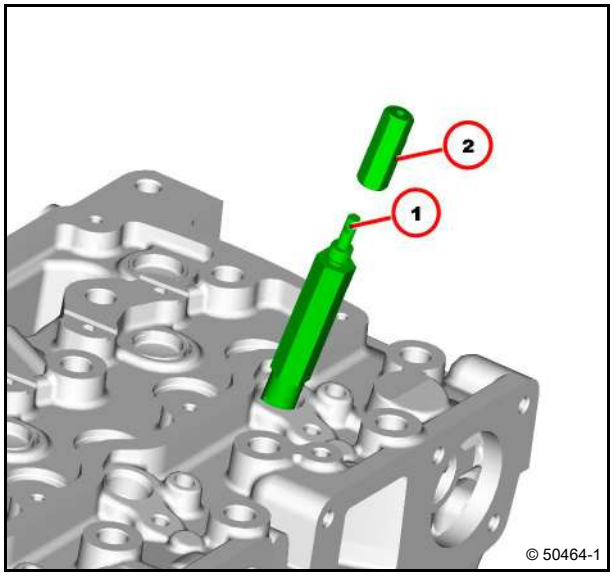

- Install slide hammer (1) on disassembly device.
- Pull out fixed sealing disc.

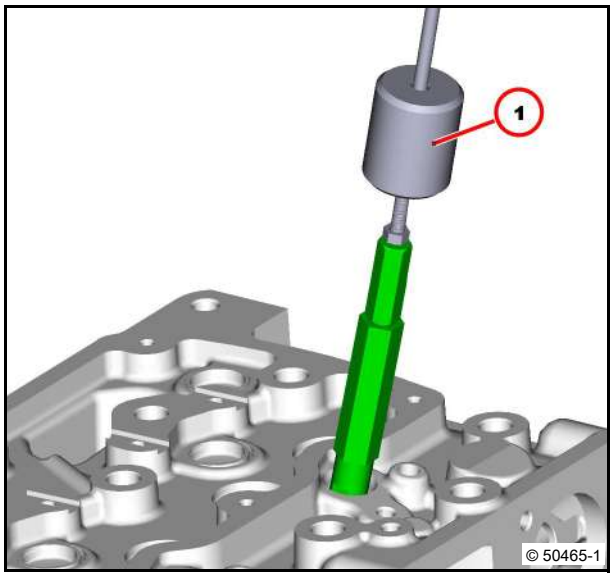

Installing the injector

Attention!
Do not twist or overtighten the O-ring.
Do not damage the O-ring!

- Mount new O-ring (1).

Use a suitable assembly aid.
Provide protection for sharp edges.

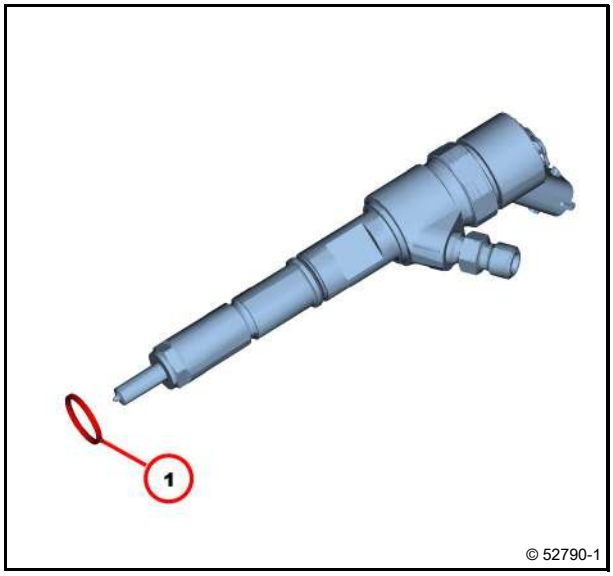

- Mount new sealing disc (1) on injector.

Attention!
Before installing the injector, combustion residue must be cleaned carefully from the bore on the cylinder head.
Suck off dirt particles.

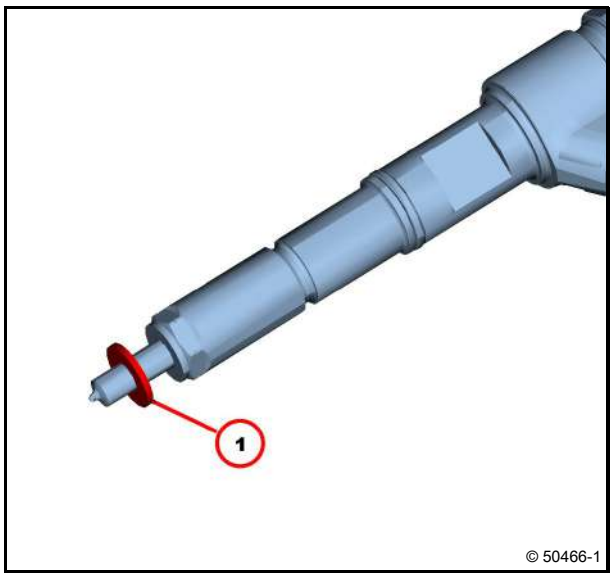

Attention!
Note assignment of the injector to the cylinder.
Ensure that the installation location is free from faults.

- Insert injector carefully in the cylinder head.
- Mount clamping shoe.
- Insert screw (1).

Do not tighten the screw until after assembling the injection line.

- Mount new injection pipe.

Module 21

Do not tighten union nuts.

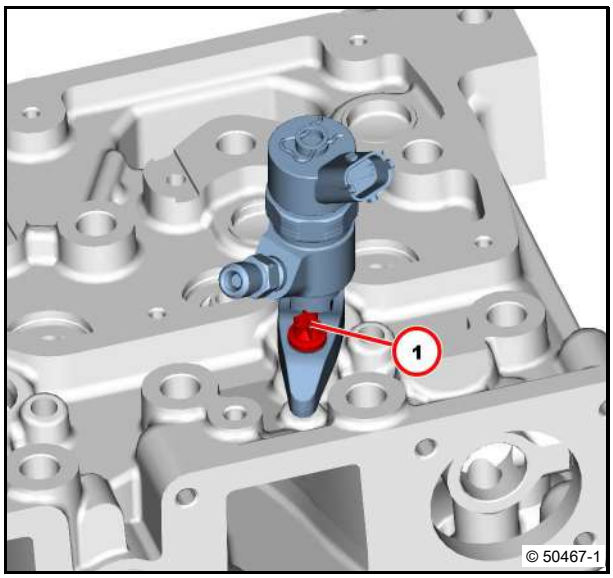

Attention!
Position (1):
The injector must be renewed if the pipe connection is disconnected.

- Tighten screw (2).

30 Nm

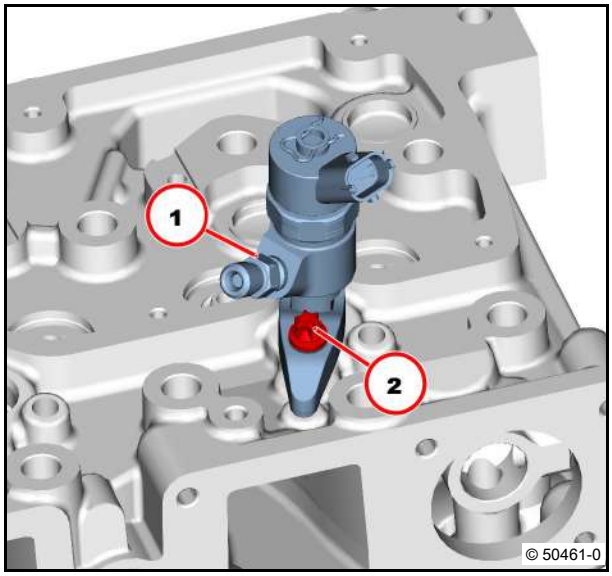

- Tighten union nuts of the injection line.

Module 21

- Connect fuel line.

Attention!
Removed, missing and bent clips must be renewed.
The clip must spring back to the hold position automatically. Otherwise renew the clip.

Module 21

- Plug in and lock cable plug.

Technical Data

Tightening specifications

ID no.	Name	Screw type	Notes / Remark	Value
A19 001	Injector on cylinder head, clamping claw		Observe order of installation. Install injector without tension.	30 Nm

For the tightening procedure according to torque using a torque wrench, a maximum variation of the tightening torque of +/- 10% is permissible.

Fastening parts

Standard tools

– Safety information / User information

Danger!

Do not carry out work on the fuel system when the engine is running.
The fuel system is under high pressure - Danger of death.

The fuel pressure can continuously remain up to several 100 bar even after stopping the engine.
Here the fuel pressure is only reduced if the fuel system is opened and the fuel can escape outside.

Attention!

Ensure utmost cleanliness for all work.
Remove any paint residue and dirt particles before disassembly.
Clean the area around the components concerned carefully. Blow wet parts dry with compressed air.
Observe the safety regulations and national specifications for handling fuels.
Close all connections immediately after opening with new, clean plugs/caps.
Do not remove plugs/caps until immediately before assembling.
Collect leaking operating substances in suitable vessels and dispose of according to regulations.

2	Hexagon head screw	42 Nm

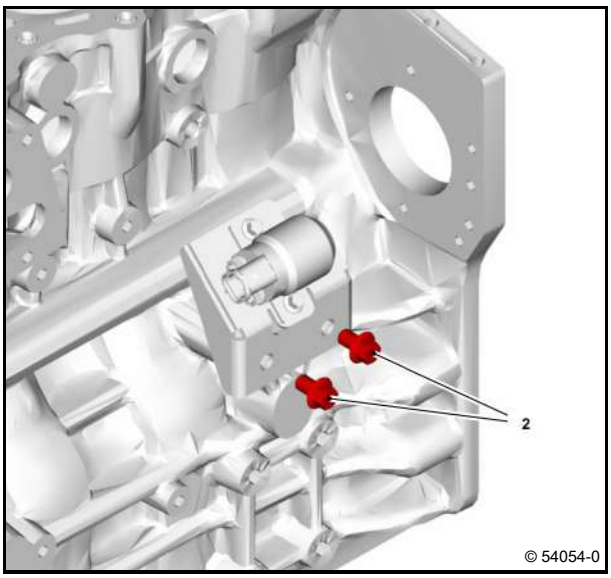

Fuel pre-filter

Standard tools

– Safety information / User information
– Operation manual

Danger!

Do not carry out work on the fuel system when the engine is running.
The fuel system is under high pressure - Danger of death.

The fuel pressure can continuously remain up to several 100 bar even after stopping the engine.
Here the fuel pressure is only reduced if the fuel system is opened and the fuel can escape outside.

Attention!

Ensure utmost cleanliness for all work.
Remove any paint residue and dirt particles before disassembly.
Clean the area around the components concerned carefully. Blow wet parts dry with compressed air.
Observe the safety regulations and national specifications for handling fuels.
Close all connections immediately after opening with new, clean plugs/caps.
Do not remove plugs/caps until immediately before assembling.
Collect leaking operating substances in suitable vessels and dispose of according to regulations.

1 Fuel pre-filter
3 Sensor 1.6 Nm
4 Sealing ring
10 Fuel filter

Use a new sealing ring.
Vent fuel system according to operating instructions.

Fuel pre-filter

Operation manual

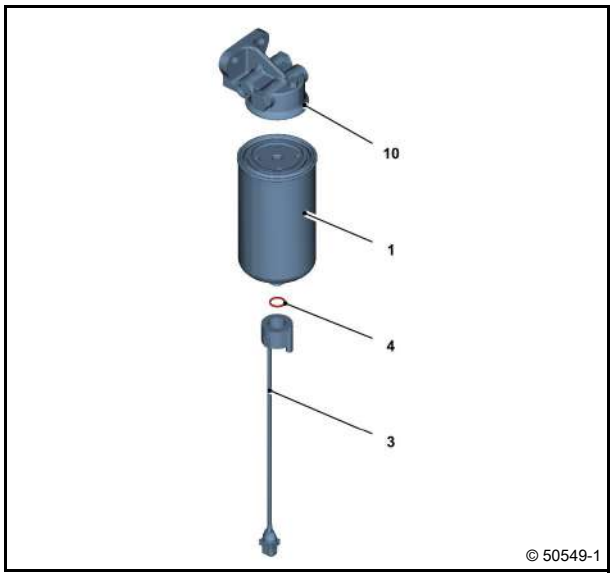

Fuel filter

Standard tools

Special tools:
– Long socket wrench insert 01899132
– Plugs/caps 01899144

– Safety information / User information

Danger!

Do not carry out work on the fuel system when the engine is running.
The fuel system is under high pressure - Danger of death.

The fuel pressure can continuously remain up to several 100 bar even after stopping the engine.
Here the fuel pressure is only reduced if the fuel system is opened and the fuel can escape outside.

Attention!

Ensure utmost cleanliness for all work.
Remove any paint residue and dirt particles before disassembly.
Clean the area around the components concerned carefully. Blow wet parts dry with compressed air.
Observe the safety regulations and national specifications for handling fuels.
Close all connections immediately after opening with new, clean plugs/caps.
Do not remove plugs/caps until immediately before assembling.
Collect leaking operating substances in suitable vessels and dispose of according to regulations.

1	Filter head	
2	Fuel spare filter	
3	Pressure sensor	25 Nm
4	O-ring	
5	Sealing ring	
6	Coupling plug	49 Nm

Use new round sealing ring.
Use a new sealing ring.

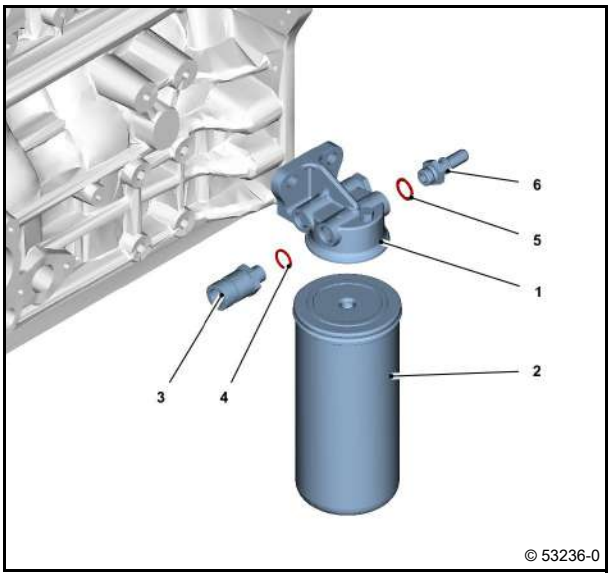

Fuel line

Standard tools

Special tools:

– Hose clip pliers	01899037
– Spring band pliers	01899112
– Plugs/caps	01899144

– Safety information / User information
– Operation manual

Danger!

Do not carry out work on the fuel system when the engine is running.
The fuel system is under high pressure - Danger of death.

The fuel pressure can continuously remain up to several 100 bar even after stopping the engine.
Here the fuel pressure is only reduced if the fuel system is opened and the fuel can escape outside.

Attention!

Ensure utmost cleanliness for all work.
Remove any paint residue and dirt particles before disassembly.
Clean the area around the components concerned carefully. Blow wet parts dry with compressed air.
Observe the safety regulations and national specifications for handling fuels.
Close all connections immediately after opening with new, clean plugs/caps.
Do not remove plugs/caps until immediately before assembling.
Collect leaking operating substances in suitable vessels and dispose of according to regulations.

1	Hose pipe	
2	Hollow screw	20 Nm
3	Sealing ring	
4	Clip	
5	Holding tape	

Use new sealing rings.

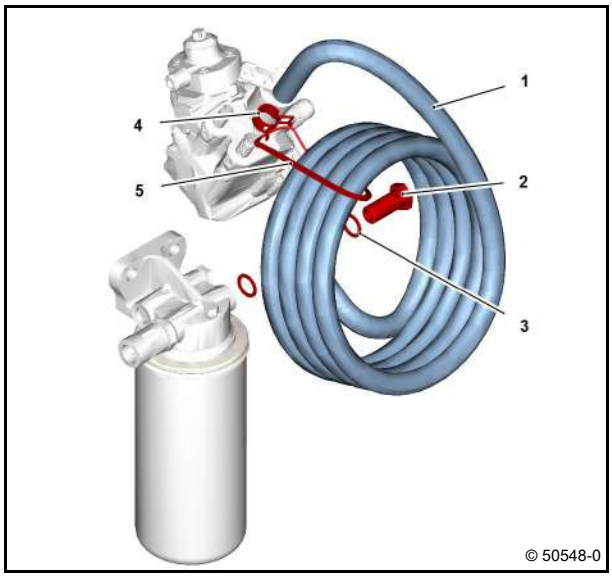

Attention!
Ensure that the installation location is free from faults.
Lay the hose pipe free from chafing and tension.

– Dimension X

15 $^{+3}_{-1}$ mm

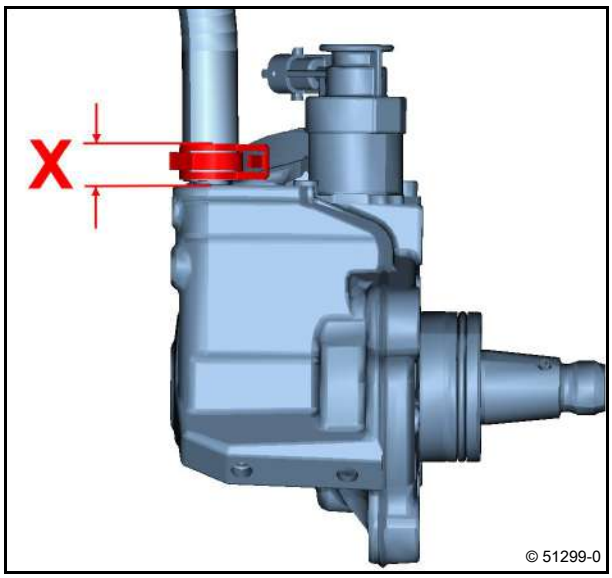

Supply pump (Fuel)

Standard tools

Special tools:
– Plugs/caps 01899144

– Safety information / User information
– Installation guideline

Danger!

Do not carry out work on the fuel system when the engine is running.
The fuel system is under high pressure - Danger of death.

The fuel pressure can continuously remain up to several 100 bar even after stopping the engine.
Here the fuel pressure is only reduced if the fuel system is opened and the fuel can escape outside.

Attention!

Ensure the utmost cleanliness when performing all work.
Before dismounting, remove any paint residues and dirt particles.
Clean the area around the components concerned carefully. Blow wet parts dry with compressed air.
Observe safety regulations and national regulations when working with fuels.
Seal all connections immediately with new and clean stoppers/caps after opening.
Only remove stoppers/caps immediately before assembly.
Collect escaping operating media in suitable vessels and dispose of them according to regulations.
The following must be observed for installation:
Installation guidelines of DEUTZ AG.
Installation guideline / documentation of the vehicle manufacturer / equipment manufacturer.
The documentation of the vehicle manufacturer / equipment manufacturer must be complied with for dismantling and installing.

1 Supply pump
2 Clip

– Fastening
Screws
4 x M5-8.8

7.5 $^{+1}_{-1}$ Nm

Attention!
Ensure that the installation location is free from faults.
The fuel outlet is facing upwards.

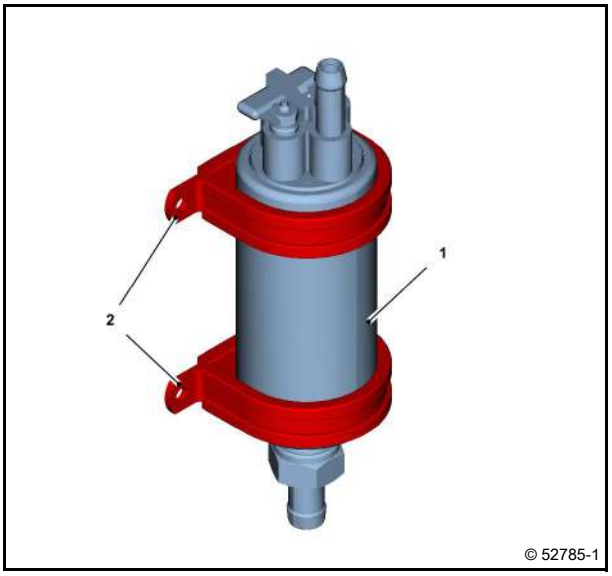

1	Nut Terminal +	M5	7.5 $^{+1}_{-1}$ Nm
2	Nut Terminal −	M5	7.5 $^{+1}_{-1}$ Nm
3	Connection nozzle Fuel outlet		

Attention!
Ensure that the cables are connected properly.

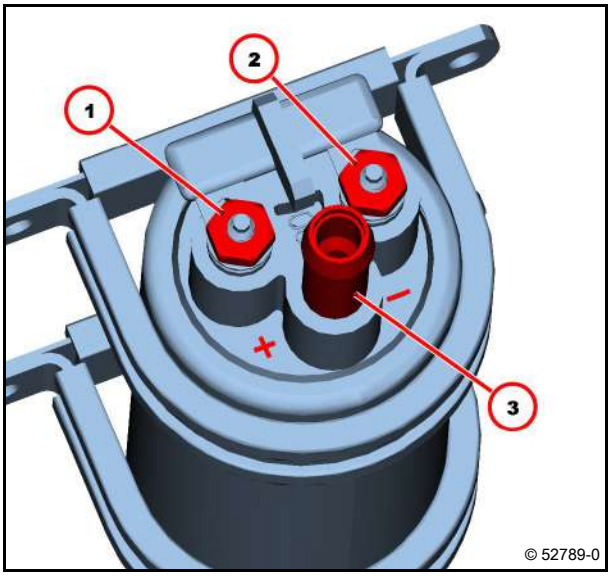

Removing and installing the rail

Standard tools:
– Wrench insert size 14

Special tools:
– Long socket wrench insert 01899132
– Plugs/caps 01899144
– Disassembly tool 02992127
– Special wrench 02992477

– Marker pen, waterproof, permanent
– Assembly grease 01016496

– Safety information / User information

Danger!

Do not carry out work on the fuel system when the engine is running.
The fuel system is under high pressure - Danger of death.

The fuel pressure can continuously remain up to several 100 bar even after stopping the engine.
Here the fuel pressure is only reduced if the fuel system is opened and the fuel can escape outside.

Attention!

Ensure utmost cleanliness for all work.
Remove any paint residue and dirt particles before disassembly.
Clean the area around the components concerned carefully. Blow wet parts dry with compressed air.
Observe the safety regulations and national specifications for handling fuels.
Close all connections immediately after opening with new, clean plugs/caps.
Do not remove plugs/caps until immediately before assembling.
Collect leaking operating substances in suitable vessels and dispose of according to regulations.

Removing the rail

1 Rail
2 High-pressure line
3 Injection line
4 Injection line
5 Screw
6 Spacer
7 Repair kit
Pressure sensor
Pressure limiting valve
11 O-ring
259 Mounting grease

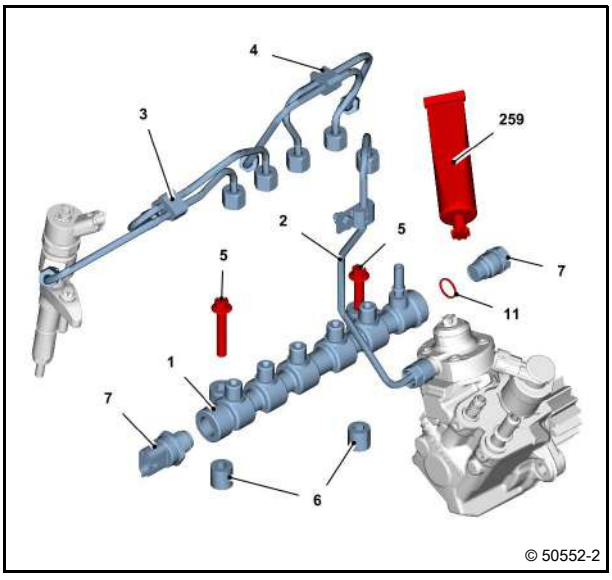

Removing high-pressure line

- Remove fuel return line.
- Unscrew union nut (1) with special wrench.
- Remove cable harness holder and swing aside.
- Unscrew union nuts (2) with special wrench.
- Remove high-pressure line (3).

Collect draining fuel and dispose of according to regulations.

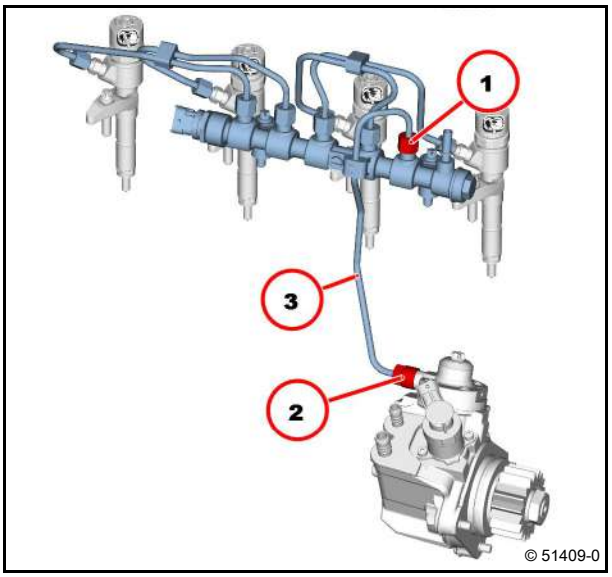

Removing injection pipes

- Unscrew lock nuts (1) with special wrench.

Attention!
Position (3):
The injector must be renewed if the pipe connection is disconnected.

- Hold pipe connection of injector.
- Unscrew lock nuts (2).
- Remove injection lines.

Collect draining fuel and dispose of according to regulations.

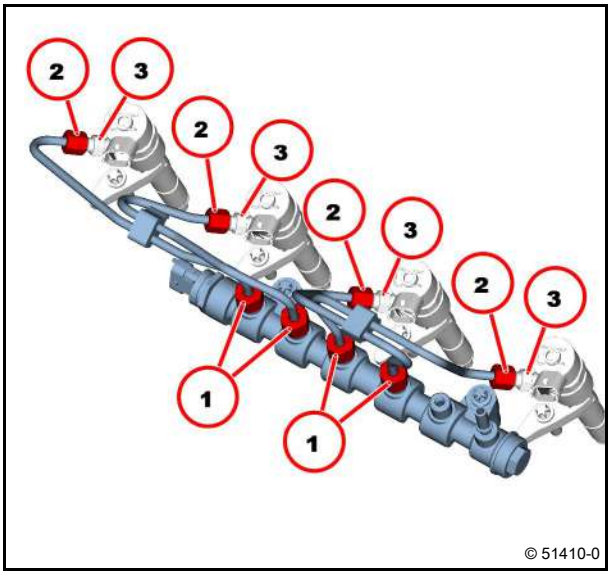

- Unlock cable plug.
- Pull out cable plug.
- Unscrew screws (1).
- Remove the rail (2).
- Remove spacer (3).
- Visually inspect the components.

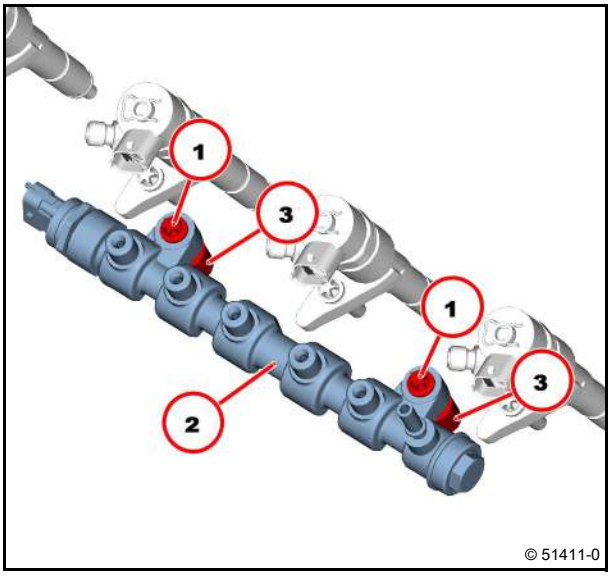

Removing the pressure sensor

- Unscrew the rail pressure sensor (1) with the socket wrench.

Collect draining fuel and dispose of according to regulations.

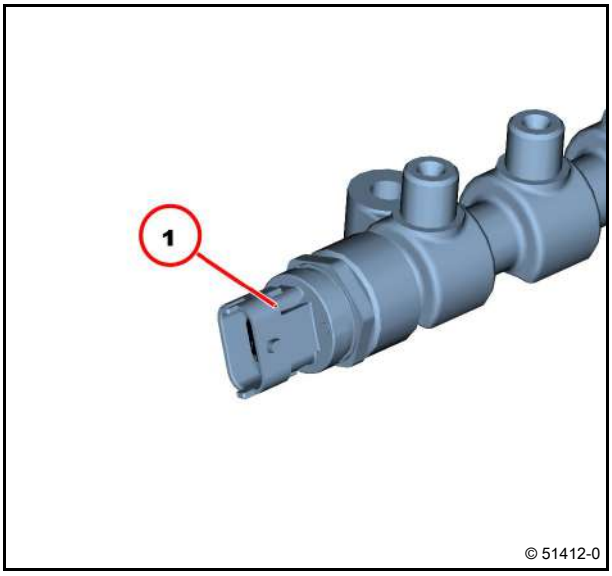

Attention!
Do not touch the pin contacts of the rail pressure sensor with your hands to avoid electrostatic discharging.
Ensure absolute cleanliness of the connector.

- Visually check the thread and the sealing edge (arrows)of the rail pressure sensor.

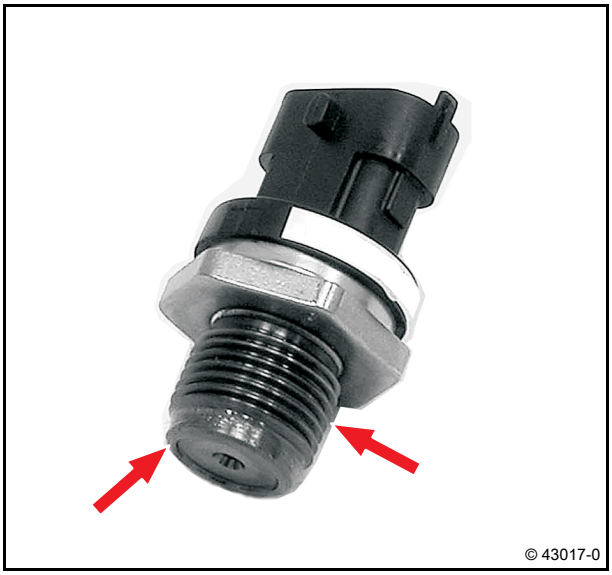

Installing the pressure sensor

Attention!
No foreign bodies may get into the rail.
Ensure utmost cleanliness. Especially on the thread and the sealing surface of the rail.
See the spare parts documentation.
Rail pressure sensor and pressure limiting valve must be replaced as a pair.

- Clean thread and sealing area of the rail.
- Coat the thread and sealing edge of the rail pressure sensor lightly with assembly grease.

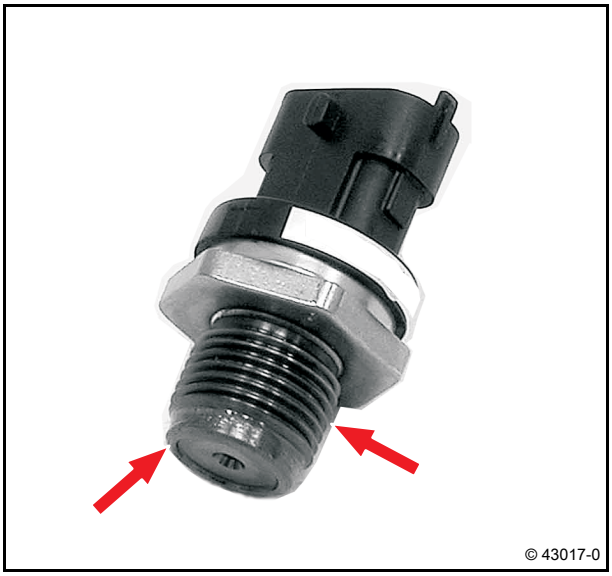

Attention!
Only tighten the rail pressure sensor with the hexagon.

- Screw in rail pressure sensor (1).
- Tighten rail pressure sensor (1) with the socket wrench insert.

70 Nm

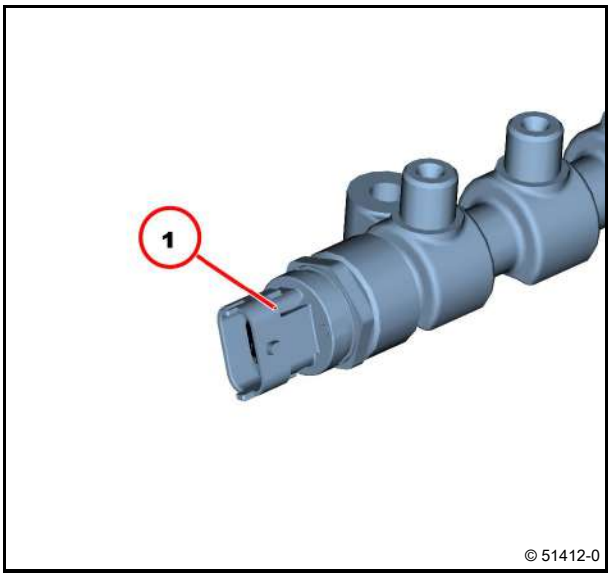

Removing the pressure limiting valve

- Unscrew pressure limiting valve (1).

Collect draining fuel and dispose of according to regulations.

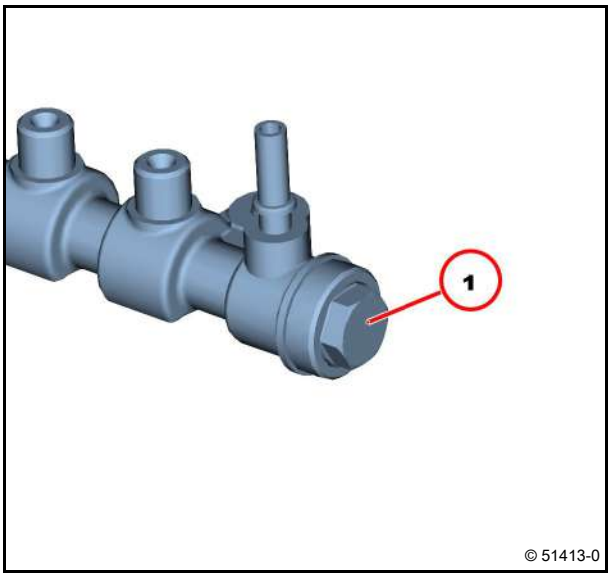

- Visually check the thread and the sealing edge of the pressure limiting valve.

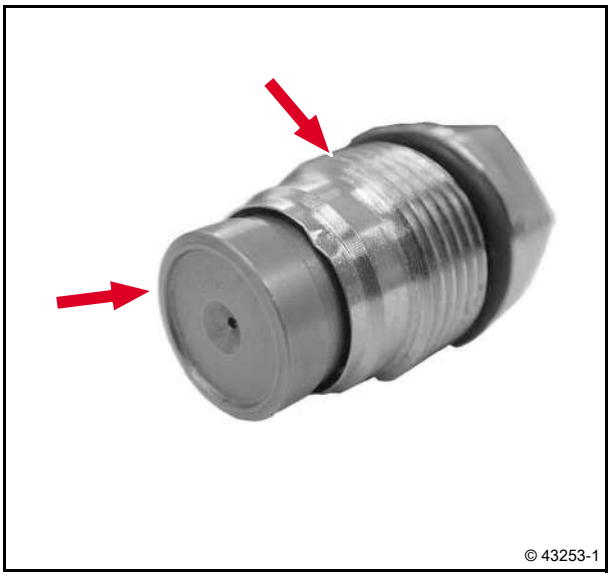

- Remove the O-ring with the disassembly tool.

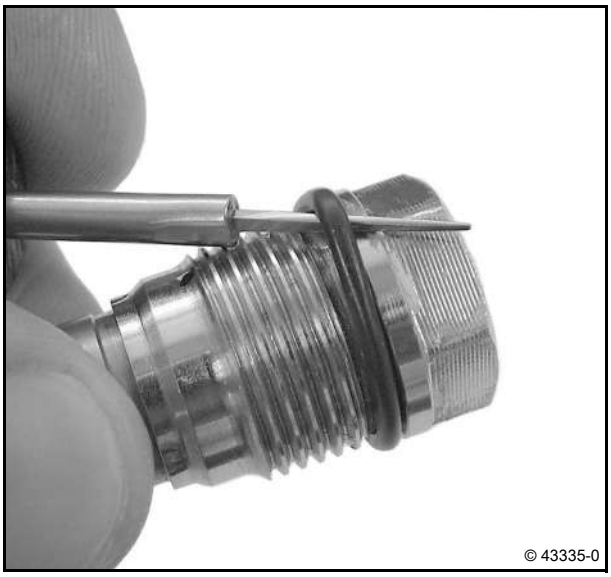

Installing the pressure limiting valve

Attention!
No foreign bodies may get into the rail.
Ensure utmost cleanliness. Especially on the thread and the sealing surface of the rail.
See the spare parts documentation.
Rail pressure sensor and pressure limiting valve must be replaced as a pair.

- Mount new O-ring (1).

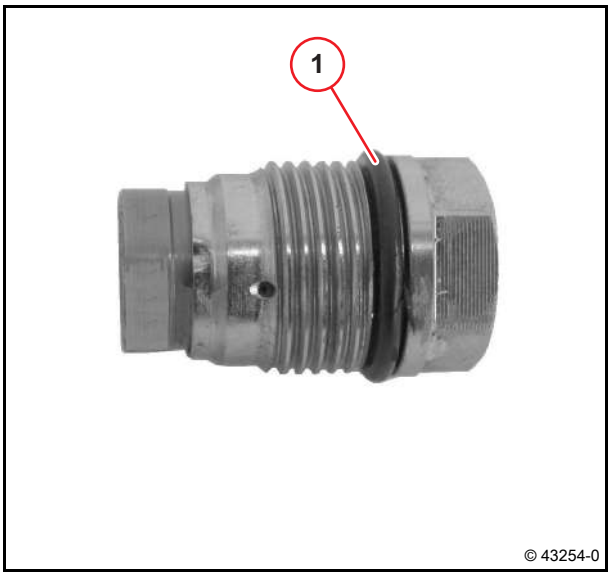

- Lightly coat the thread and sealing edge of the pressure limiting valve with assembly grease.

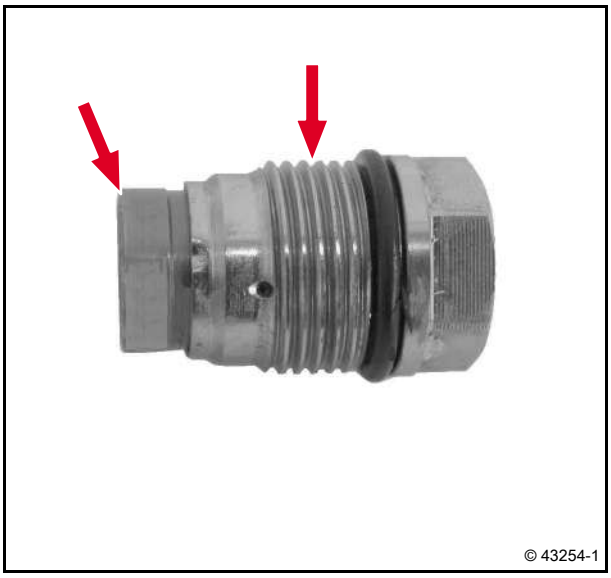

- Clean thread and sealing area of the rail.
- Screw in pressure limiting valve (1).
- Tighten pressure limiting valve.

  100 Nm

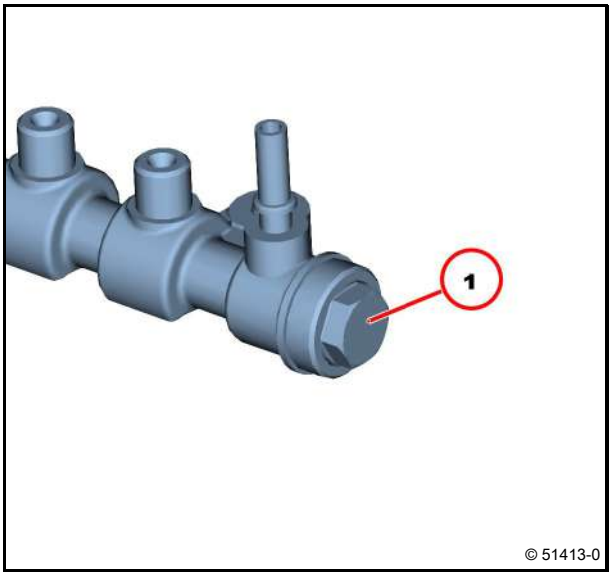

Mounting rail

- Mount rail (1) with spacer (2).
- Loosely preassemble rail (1) with screws (3).

Do not tighten screws.

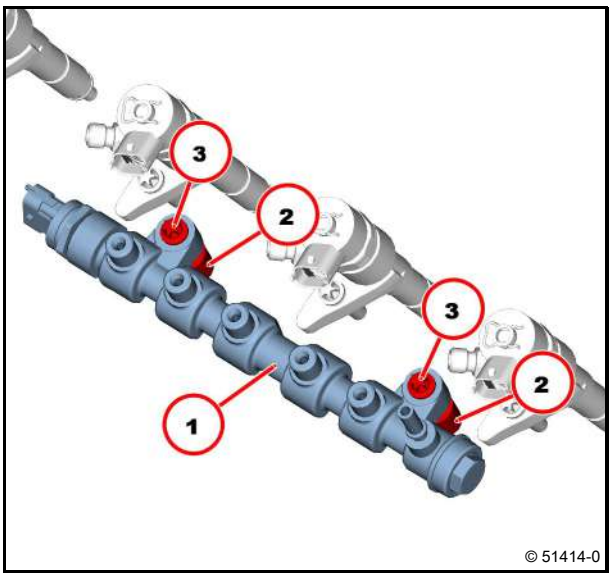

Installing injection pipes

Attention!
The injection lines must always be renewed after disassembly.

Note assignment and installation position of the injection lines.

- Mount new injection lines (1).

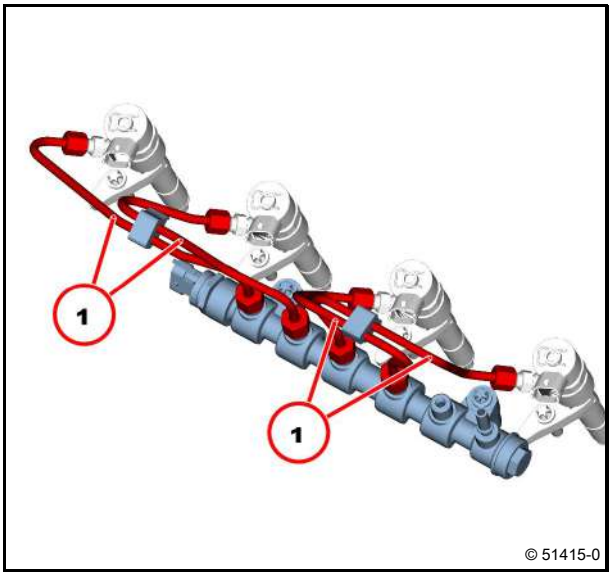

Attention!
Pay attention to alignment of the injection pipes.
Lines must not be in the bores (1) of the union nuts.
Install injection lines without tension and without touching.
They must be a safe distance away from adjacent parts.

- Align injection lines.
- Tighten union nuts hand-tight.

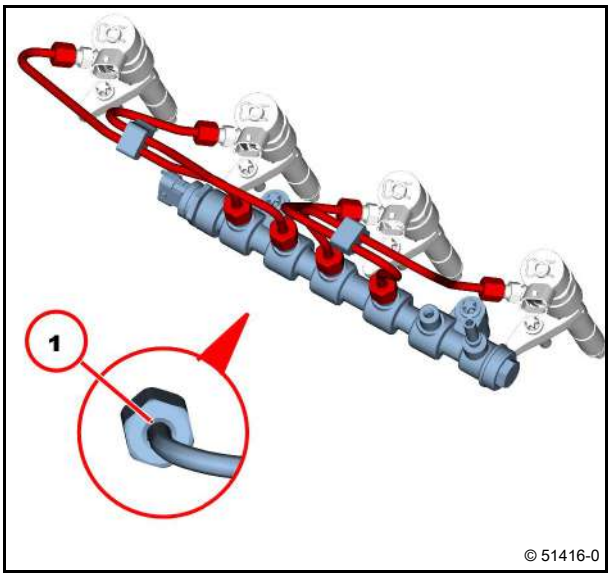

Installing high-pressure line

Attention!
The high-pressure line must always be renewed after dismantling.

Ensure that the installation location is free from faults.

- Mount new high-pressure line (1).

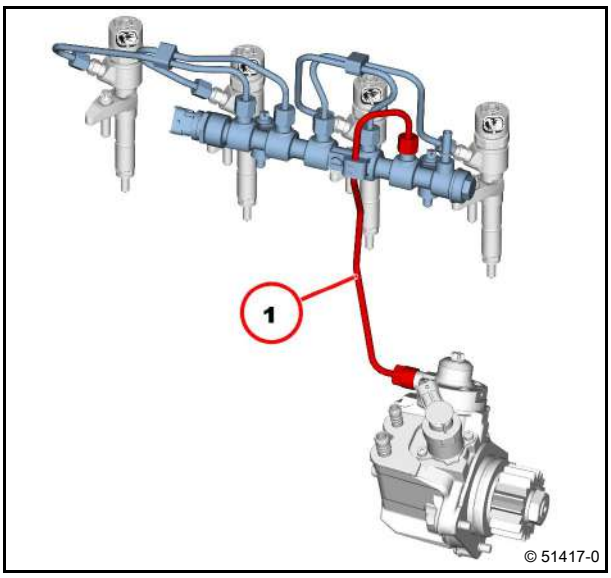

Attention!
Pay attention to alignment of the high-pressure line.
Line may not touch in the bore (1) of the union nut.
Install high-pressure line without tension and contact.
They must be a safe distance away from adjacent parts.

- Align high-pressure line.
- Tighten union nuts hand-tight.

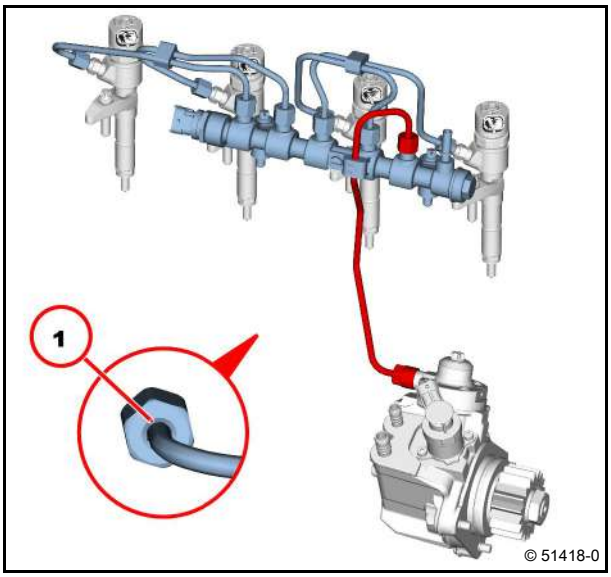

- Tighten screws (1).

  30 Nm

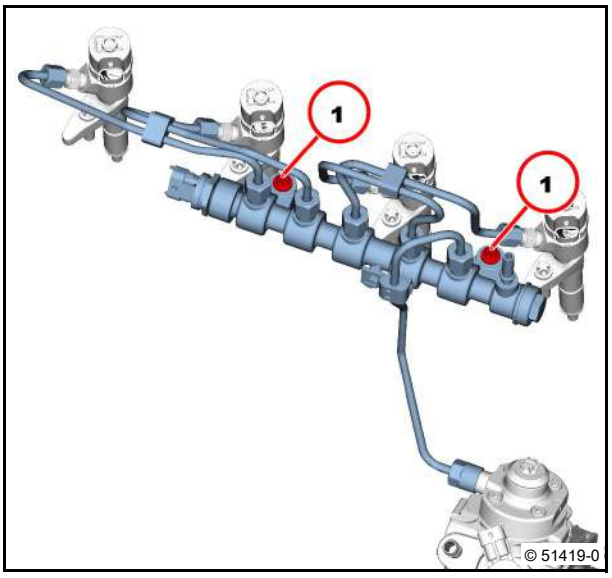

- Tighten the union nuts in order.
- Stage 1:

  10 Nm

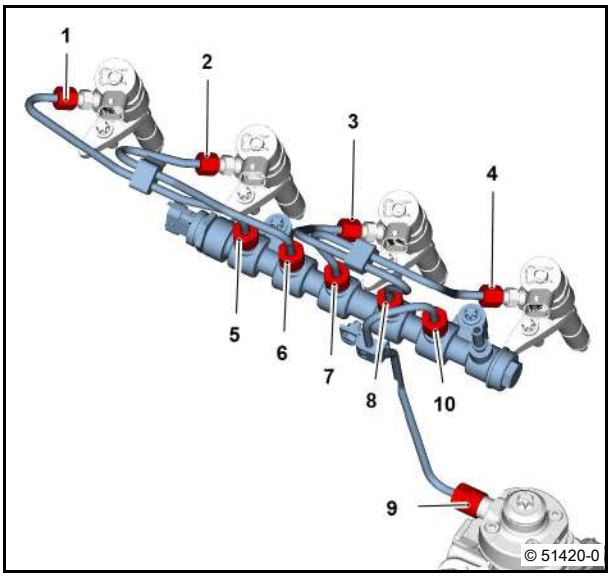

- Draw help markings (1).
- Tighten union nut.
  - Stage 2:

  60° + 5°
- Check injection lines for perfect installation position.
- Check the high-pressure line for perfect installation position.
- Mount fuel return line.
- Mount cable harness holder.
- Plug in and lock cable plug.

Ensure that the connection is perfect.

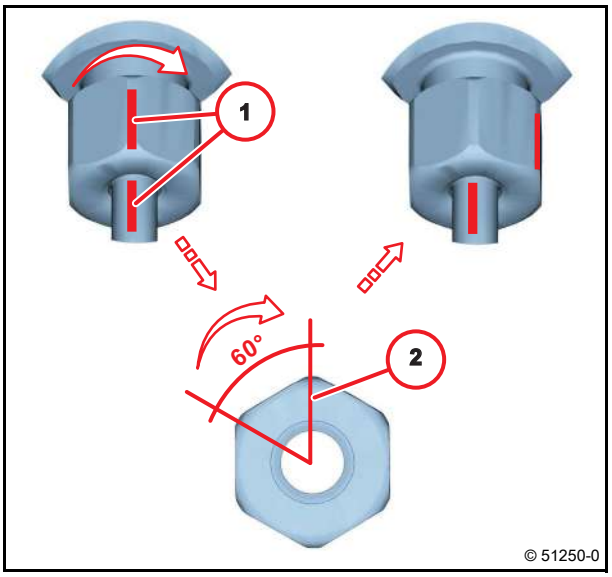

Technical Data

Tightening specifications

ID no.	Name	Screw type	Notes / Remark	Value
A21 003	Injection line on rail and injector, high-pressure line on high-pressure pump and on rail	Union nut	Stage 1: Observe assembly instructions. Use new line.	10 Nm
A21 003	Injection line on rail and injector, high-pressure line on high-pressure pump and on rail		Stage 2:	60° $^{+5^\circ}$
A21 038	Rail on cylinder head		Observe assembly specification.	30 Nm
A21 039	Pressure limiting valve on rail		Lightly coat the thread and sealing edge with assembly grease.	100 Nm
A21 040	Pressure sensor on rail	M18x1.5	Lightly coat the thread and sealing edge with assembly grease.	70 Nm

For the tightening procedure according to torque using a torque wrench, a maximum variation of the tightening torque of +/- 10% is permissible.

Removing and installing the fuel line (injector, rail, high-pressure pump)

Standard tools

Special tools:
- Spring band pliers 01899112
- Plugs/caps 01899144

- Safety information / User information

Danger!

Do not carry out work on the fuel system when the engine is running.
The fuel system is under high pressure - Danger of death.

The fuel pressure can continuously remain up to several 100 bar even after stopping the engine.
Here the fuel pressure is only reduced if the fuel system is opened and the fuel can escape outside.

Attention!

Ensure utmost cleanliness for all work.
Remove any paint residue and dirt particles before disassembly.
Clean the area around the components concerned carefully. Blow wet parts dry with compressed air.
Observe the safety regulations and national specifications for handling fuels.
Close all connections immediately after opening with new, clean plugs/caps.
Do not remove plugs/caps until immediately before assembling.
Collect leaking operating substances in suitable vessels and dispose of according to regulations.

Removing the fuel line

1 Fuel line
2 Return line
3 Hose holder
5 Spring band clip
6 Hose pipe
7 Pipe clip
8 Hexagon head screw

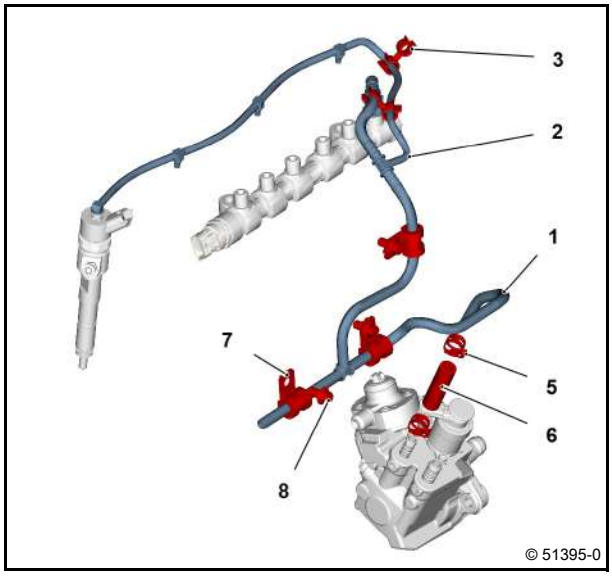

Attention!
Removed, missing and bent clips must be renewed.
The clip must spring back to the hold position automatically. Otherwise renew the clip.

- Press in the clip (1) to the stop.
- Pull out return line (2).

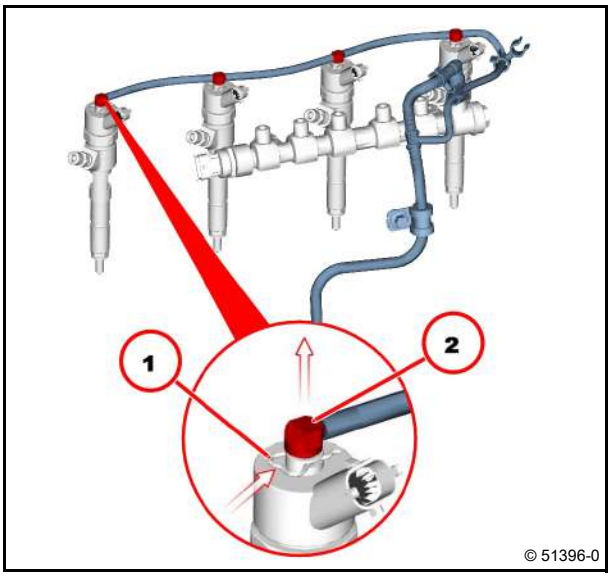

- Remove return line (1) from hose holder (2).
- Unlock coupling plug (3) and pull off.
- Unscrew screws (4).

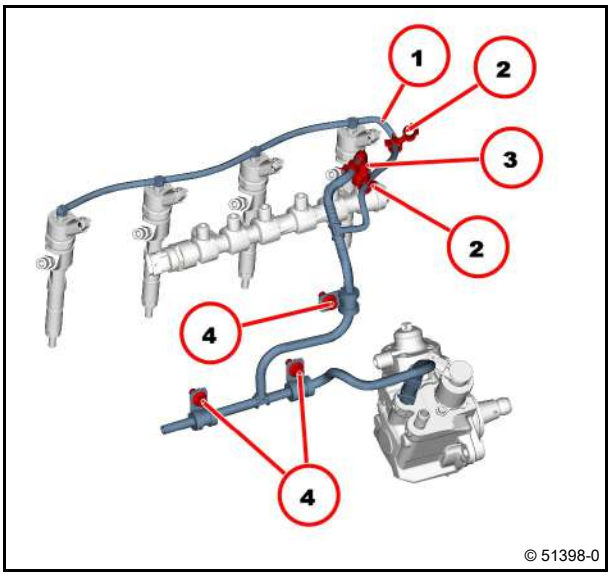

- Loosen spring band clip (1) with spring band pliers.
- Pull off hose pipe (2).
- Remove fuel line (3).
- Visually inspect the components.
- Replace damaged components.

Attention!
Damaged fuel lines must be replaced completely.

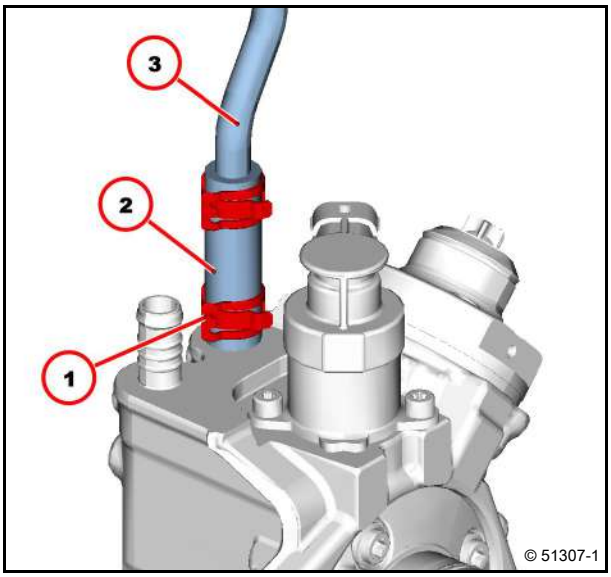

Mounting the fuel line

Attention!
Damaged fuel lines must be replaced completely.
Ensure that the installation location is free from faults.
Lines must be pushed on so that they are flush.

- Position fuel pipe.
- Position the spring band clip (1) with the spring band pliers.
  - Dimension X
    4 $^{+2}_{-2}$ mm
- Mount the hose pipe (2).

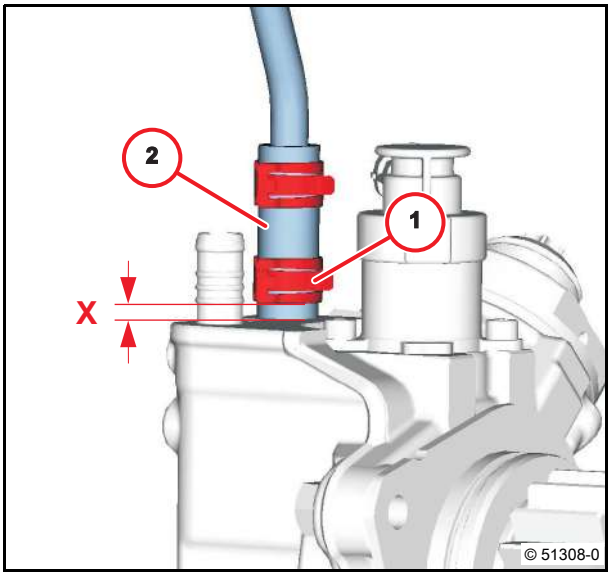

Attention!
Ensure that the installation location is free from faults.

Fuel line with fabric casing:
If a hose piece is pulled off of the hose connection, the hose line must be replaced completely.
Push hose piece onto the hose connection up to the end stop!

- Position fuel pipe.
- Insert return line (1) in hose holder (2).
- Position pipe clips (3).
- Tighten screws (4).
- Mount coupling plug (5) and latch into place.

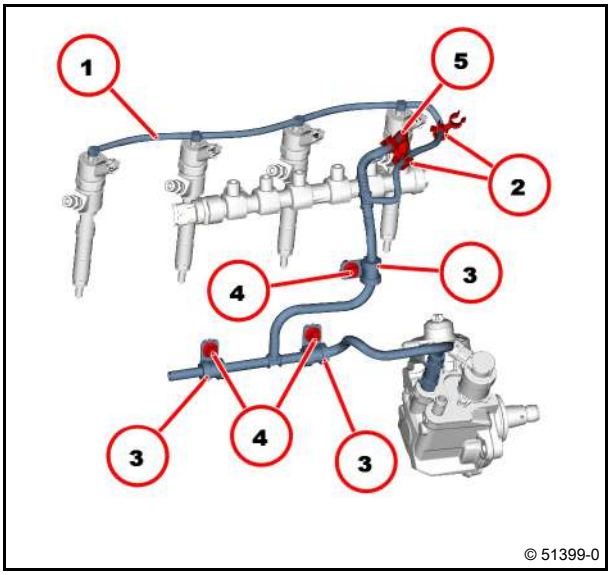

Attention!
Removed, missing and bent clips must be renewed.
The clip must spring back to the hold position automatically. Otherwise renew the clip.

- Position return line (1) vertically to the injector.
- Insert return line (1) in injector by hand.

Attention!
Ensure that the installation location is free from faults.
Return line must snap in audibly.

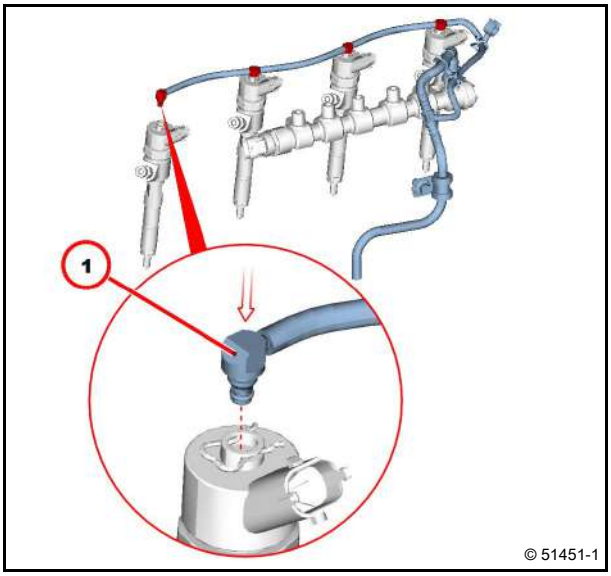

- Tighten screws (1).

  30 Nm

- Carry out a trial run.
- Check fuel system for leaks.
  - Visual inspection for leaks

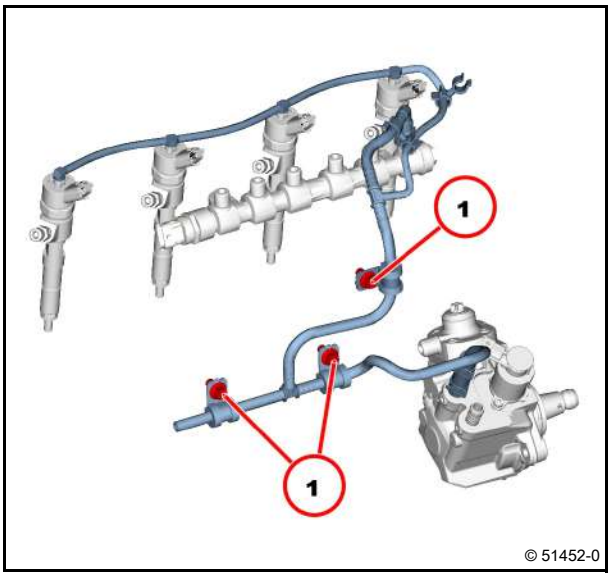

Technical Data

Tightening specifications

ID no.	Name	Screw type	Notes / Remark	Value
A12 095	Pipe clips, fastening			30 Nm

For the tightening procedure according to torque using a torque wrench, a maximum variation of the tightening torque of +/- 10% is permissible.

Removing and install the charge air line

Standard tools

– Safety information / User information

Remove charge air line

1 Charge air line
2 Seal
3 Hexagon head screw

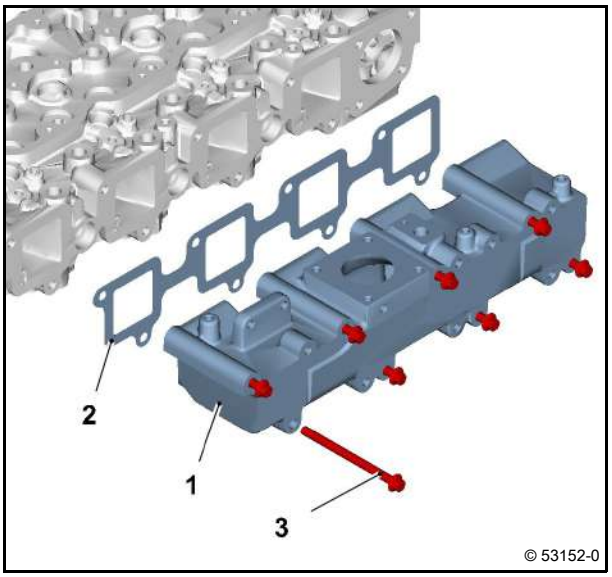

- Remove fuel return line.
- Unlock cable plug and disconnect.
- Unscrew screws (1).
- Remove charge air line (2).
- Remove gasket (3).
- Visually inspect the components.

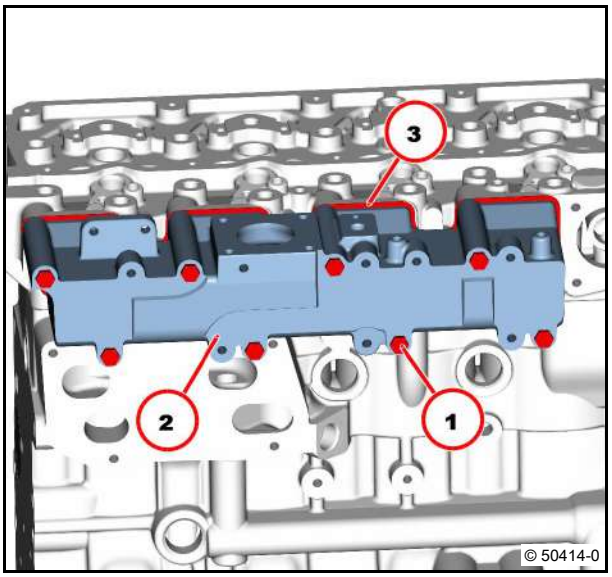

Install charge air line

- Clean sealing surfaces.
- Mount new gasket (1).
- Turn screws into the seal a few turns.

The seal is locked by the screw thread.

Ensure that the installation location of the gasket is free from faults.

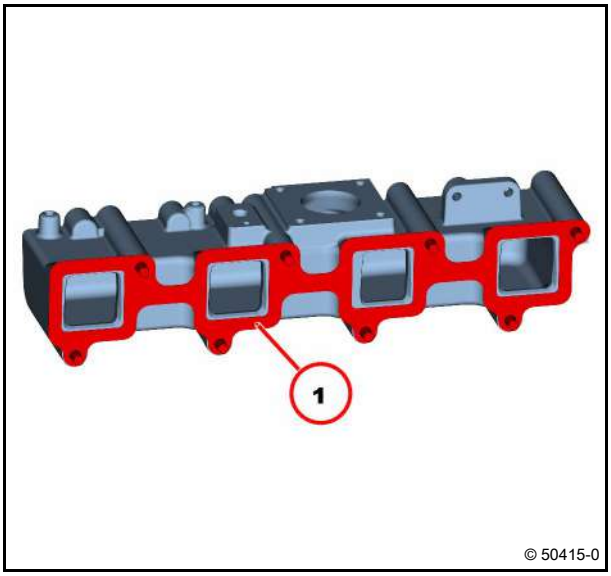

- Mount charge air line (1).
- Tighten screws (2).

Do not move gasket.

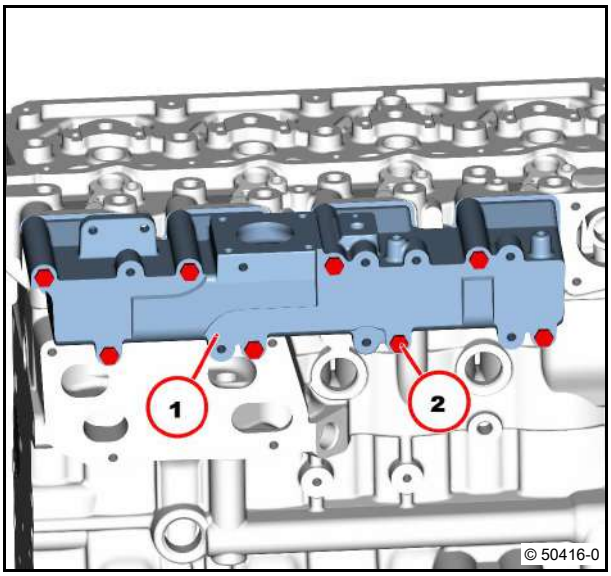

- Tighten the screws according to the tightening sequence.

30 Nm

Attention!

Ensure that the cables are laid perfectly.

- Plug in and lock cable plug.
- Mount fuel return line.

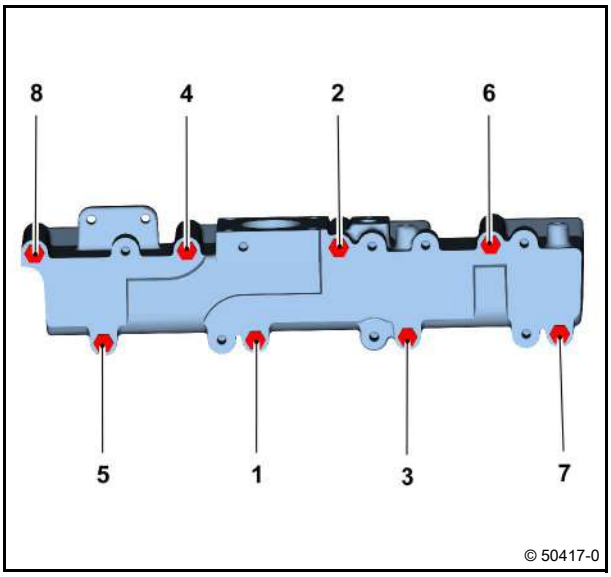

Technical Data

Tightening specifications

ID no.	Name	Screw type	Notes / Remark	Value
A22 030	Charge air line on cylinder head			30 Nm

For the tightening procedure according to torque using a torque wrench, a maximum variation of the tightening torque of +/- 10% is permissible.

Removing and installing charge air manifold

Standard tools:
– Spring band pliers 01899112

Removing charge air manifold

1 Rubber sleeve
2 Hose nozzles
3 Spring band clip
4 Spring band clip
5 Spring band clip
6 Seal
7 Charge air manifold
8 Hexagon head screw

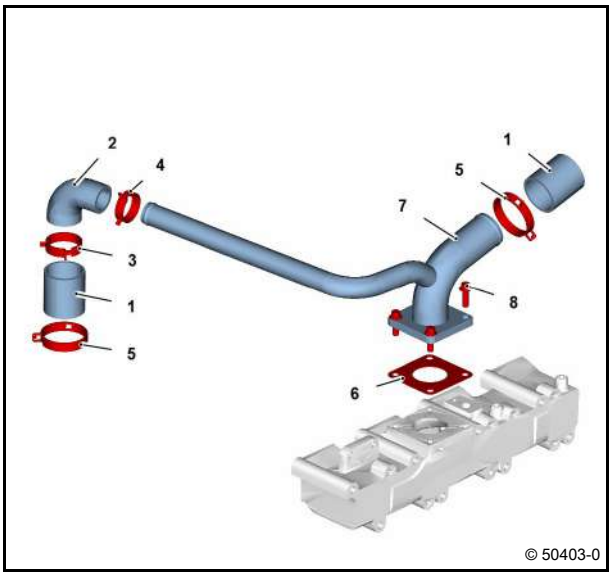

- Loosen spring band clips (1) with spring band pliers.
- Unscrew screws (2).
- Remove charge air manifold (3).
- Remove gasket (4).
- Visually inspect the component.

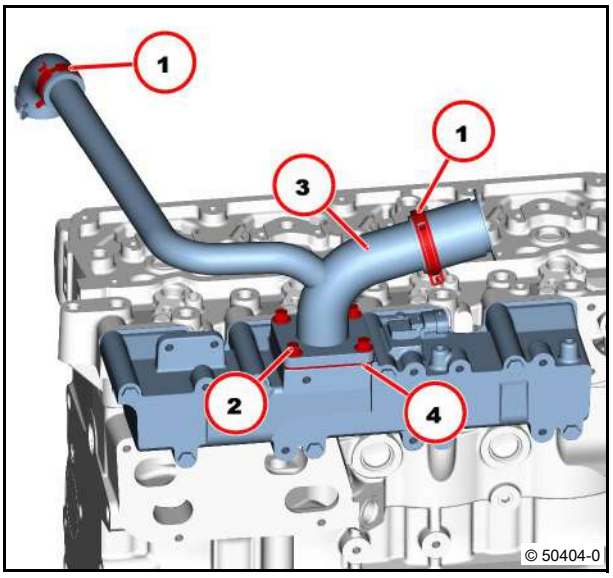

Charge air line

Installing charge air manifold

- Clean sealing surfaces.
- Mount gasket (1).
- Mount charge air manifold (2).
- Fasten screws (3).
- Tighten screws alternately.

  30 Nm

- Position spring band clips (4) with spring band pliers.

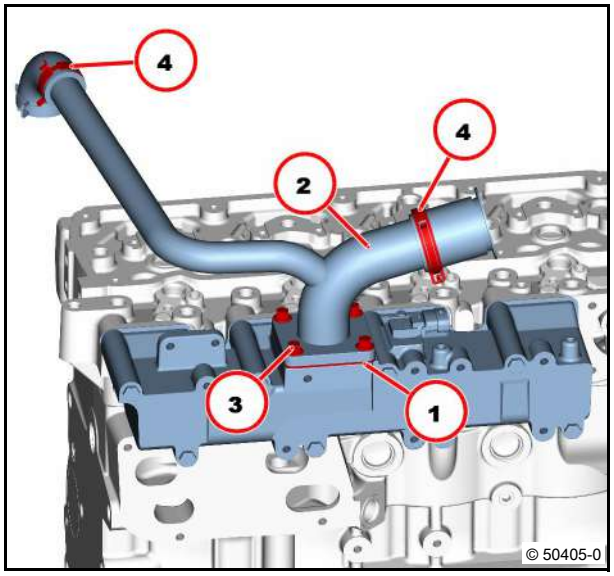

Technical Data

Tightening specifications

ID no.	Name	Screw type	Notes / Remark	Value
A22 046	Charge air manifold on charge air line			30 Nm

For the tightening procedure according to torque using a torque wrench, a maximum variation of the tightening torque of +/- 10% is permissible.

Pressure transmitter / temperature pressure transmitter (charge air)

Standard tools

– Fitting compound DEUTZ AP1908

– Safety information / User information

Attention!
Ensure utmost cleanliness for all work.
Remove any paint residue and dirt particles before disassembly.
Clean the area around the components concerned carefully. Blow wet parts dry with compressed air.
Close all connections immediately after opening with new, clean plugs/caps.
Do not remove plugs/caps until immediately before assembling.

1	Temperature sensor	
2	Hexagon head screw	11 Nm
3	Hexagon head screw	30 Nm
4	Hexagon head screw	5 Nm
5	Pressure sensor	
6	Console	
7	Sealing ring	
8	Hollow screw	18 Nm
9	Hose ring piece	
242	Mounting compound	

- Clean sealing surfaces.

Use new sealing rings.

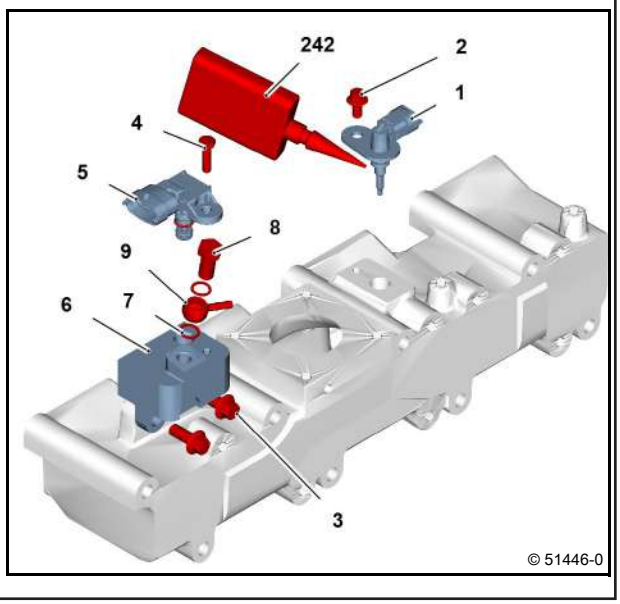

Charge air line

Positions
1
5
Use mounting compound.
Use new round sealing ring.

Air intake pipe

Intake nozzle (exhaust turbocharger)

Standard tools:
– Spring band pliers 01899112

1 Intake nozzle
2 Spring band clip
3 Spring band clip
4 Hexagon head screw 13 Nm
5 Pipe clip
6 Pipe
7 Rubber sleeve
8 Spring band clip

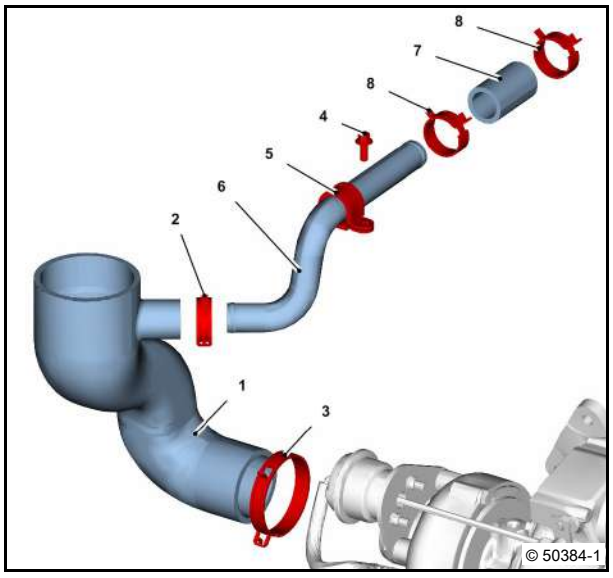

- Position spring band pliers on the marks of the rubber sleeve.

Position the spring band clip facing upwards in an easy to reach position.

Attention!
Ensure that the installation location is free from faults.

– Dimension I
  2 mm
– Dimension II
  25 mm
– Dimension III
  25 mm

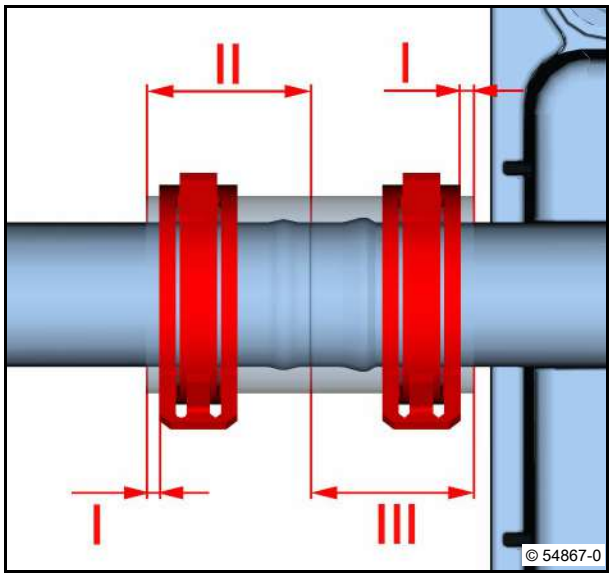

- Push in pipe (1) until it reaches the detent (2).

Position the spring band plier so that it is freely accessible from above.

Attention!
Ensure that the installation location is free from faults.

– Dimension I

  2 mm

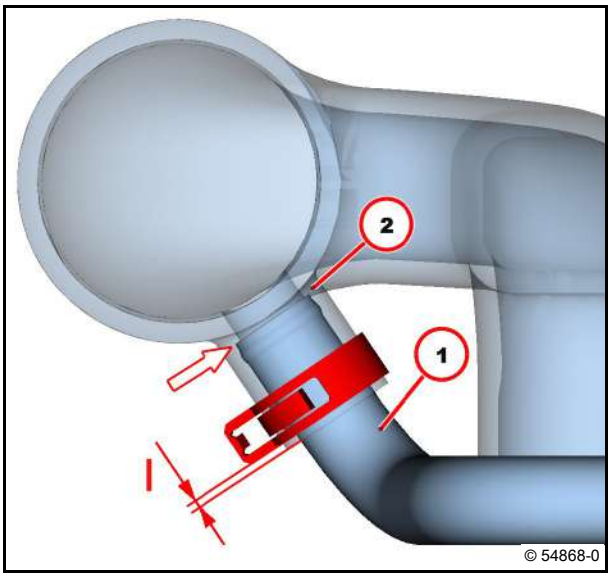

Charge air line

Charge air manifold

Standard tools

1	Charge air manifold	
2	Throttle valve	
3	Seal	
4	Hexagon head screw	30 Nm
5	Hexagon head screw	13 Nm
6	Seal	

Use a new gasket.

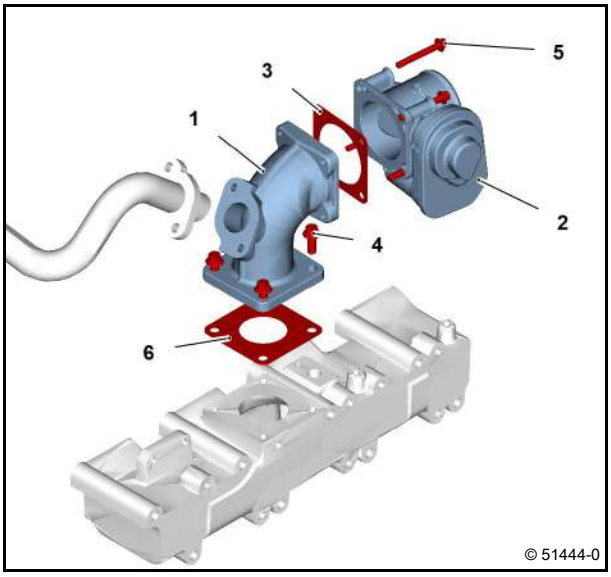

Charge air line
Technical Data
Tightening specifications

ID no.	Name	Screw type	Notes / Remark	Value
A22 046	Charge air manifold on charge air line			30 Nm

Charge air line

Standard tools

Special tools:
– Spring band pliers 01899112

– Safety information / User information

1 Hose pipe
2 Spring band clip
3 Spring band clip
4 Seal
5 Charge air line
6 Hexagon head screw 30 Nm

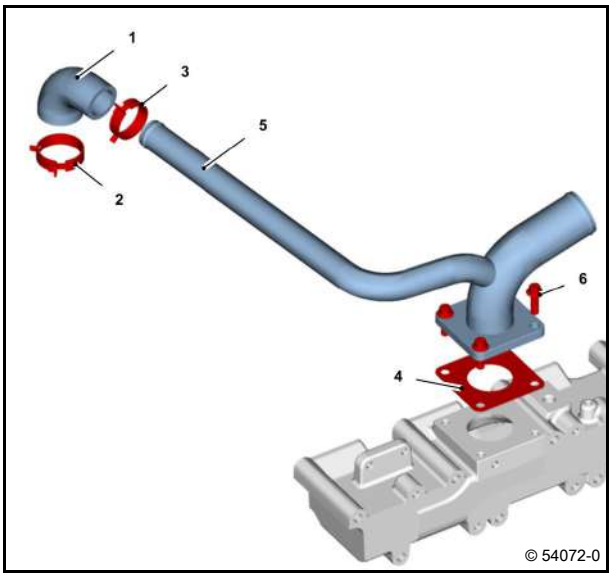

Use a new gasket.

Positions
1
2
3

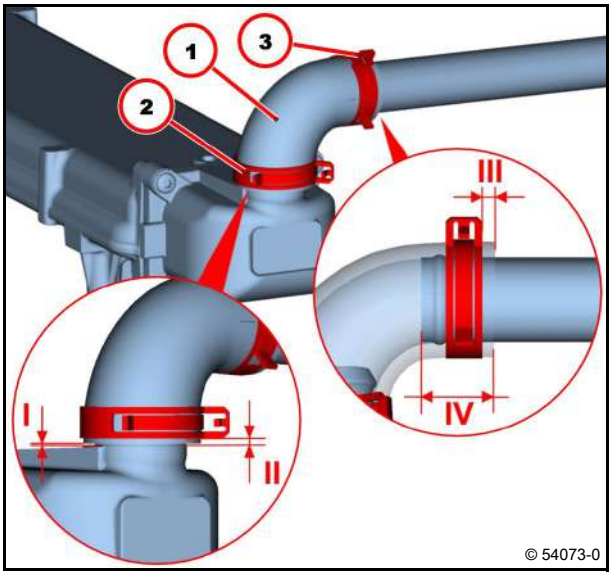

Attention!
Ensure that the installation location is free from faults.

– Dimension I
  1 mm
– Dimension II
  4 mm
– Dimension III
  2 mm
– Dimension IV
  24 mm

Removing and installing the coolant pump

Standard tools

Special tools:
- Special pliers 01899191
- Disassembly tool 02992127

- Fitting compound DEUTZ AP1908

- Safety information / User information
- Operation manual

Danger!

Observe specifications for working on the cooling system - see operating manual.

Attention!

Due to leakage, the coolant pump must be replaced after being removed.

Collect leaking operating substances in suitable vessels and dispose of according to regulations.

Observe the appropriate operating instructions for emptying and filling the engine.

Removing coolant pump

1	Coolant pump	
2	Laminated seal	
3	Hose connection	35 Nm
4	Screw plug	35 Nm
5	Screw plug	60 Nm
6	Sealing ring	
7	Sealing ring	
10	Hexagon head screw	

Use new sealing rings.

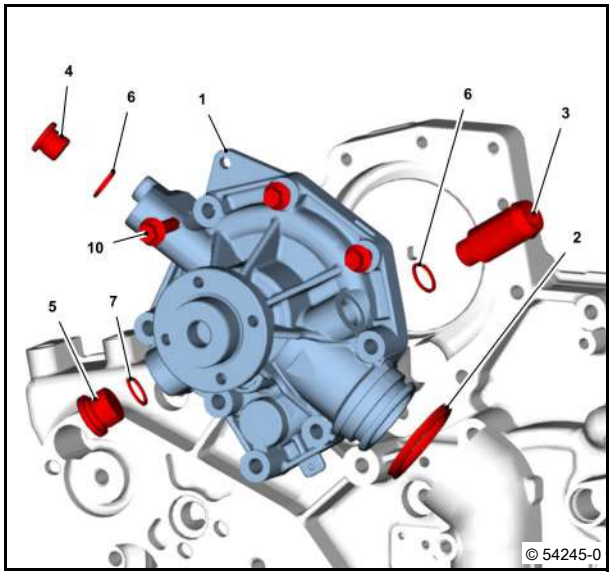

- Remove ribbed belt / V-belt.

  Operating Manual

- Remove ribbed / V belt pulley.

  Module 37

- Remove coolant line.

  Module 38

- Remove locking ring (1).
- Remove connector piece (2) with special pliers in the direction of the arrow.

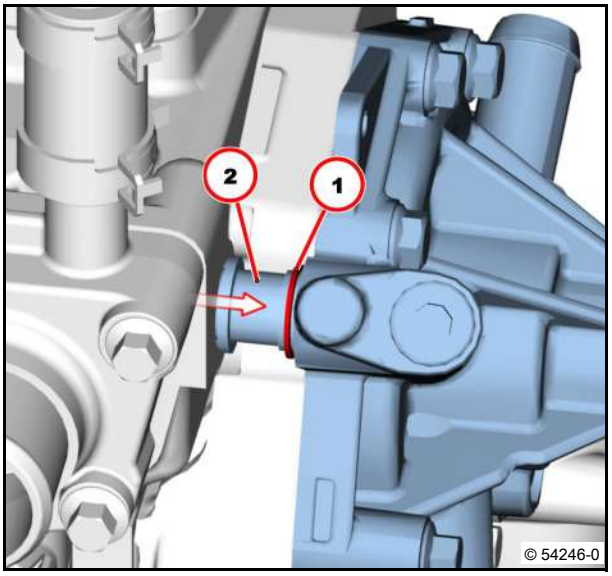

Note different screw lengths.

- Unscrew screws (1).
- Unscrew screws (2).
- Remove coolant pump (3).

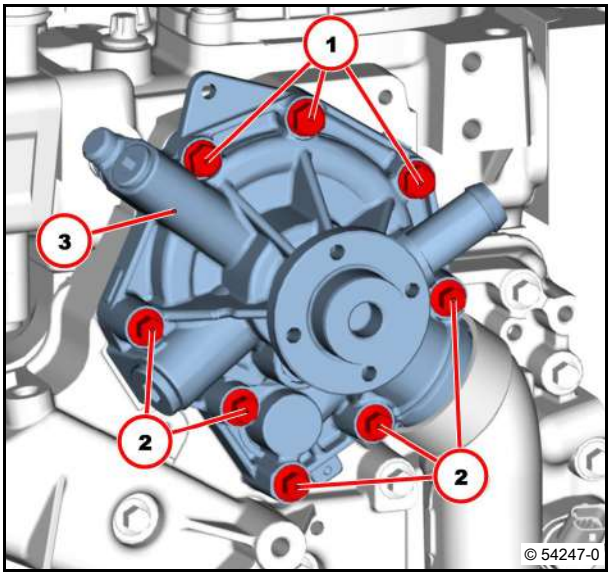

- Remove plug element (1) in direction of arrow.

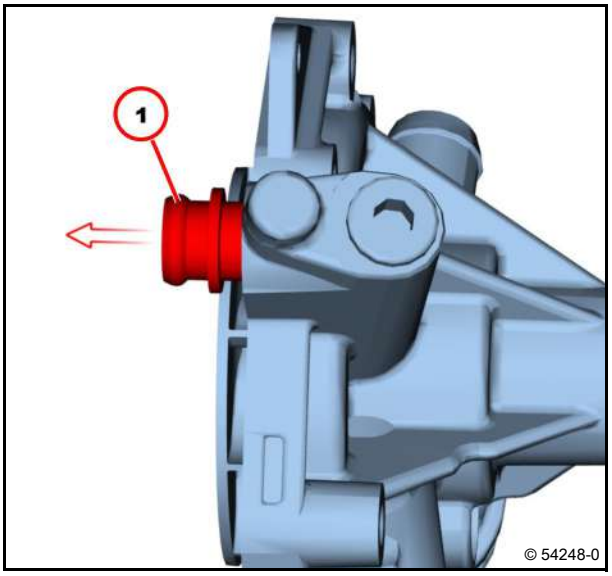

Coolant pump

- Remove the laminated seal (1) with the disassembly tool.

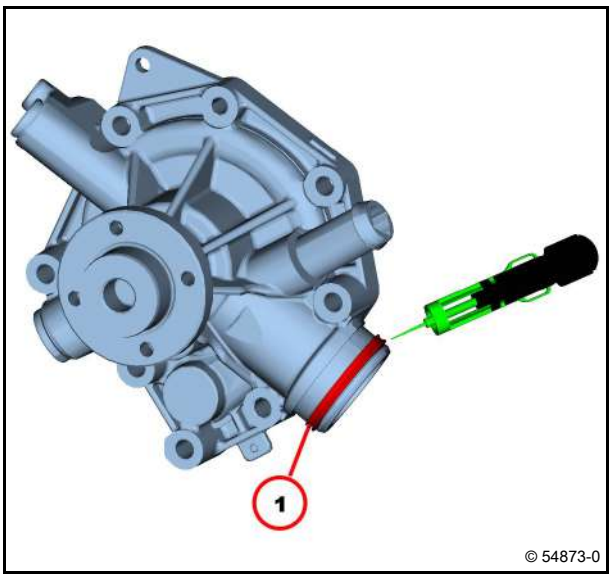

Installing coolant pump

Attention!
Due to leakage, the coolant pump must be replaced after being removed.

- Insert a new laminated seal (1) with assembly paste.
- Insert a new laminated seal (1).

Attention!
Ensure that the installation location is free from faults.

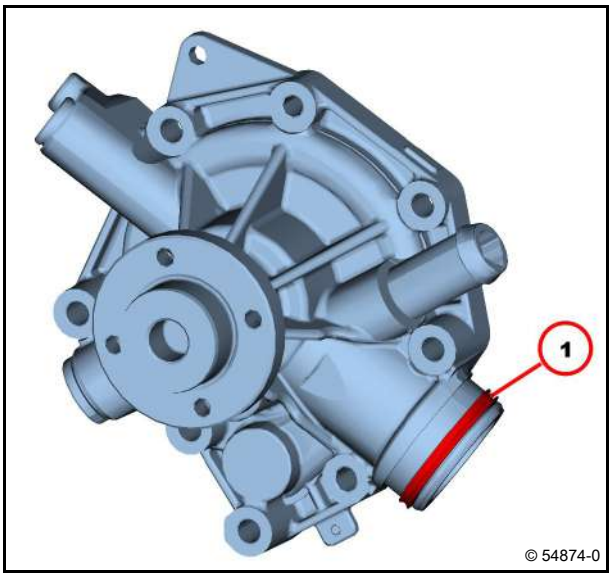

- Coat new plug piece (1) with mounting compound.
- Push in a new connector piece (1) in the direction of the arrow until reaching the detent.

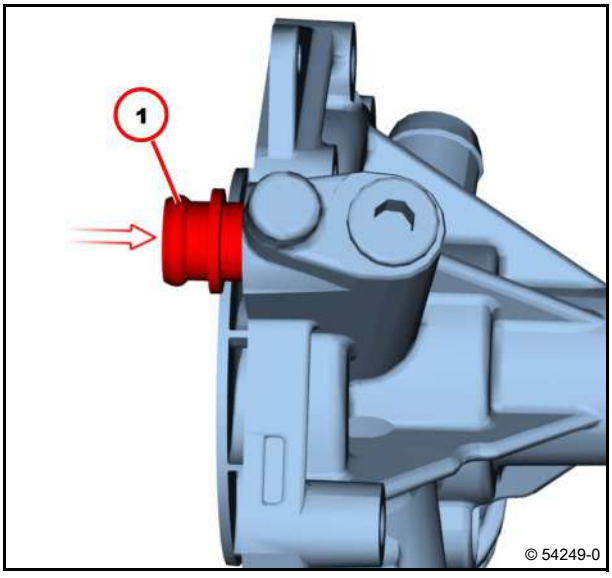

- Clean sealing surfaces.
- Attach coolant pump (1).

Note different screw lengths.

- Tighten screws (2) alternately.
  M8x30
- Tighten screws (3) alternately.
  M8x80

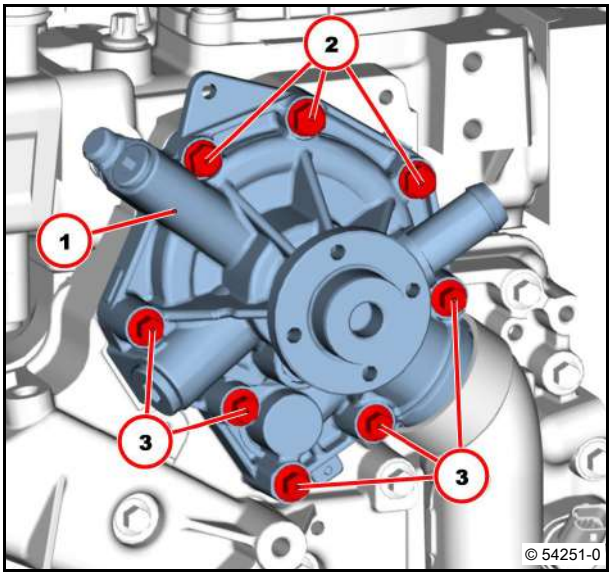

- Tighten all screws (1) alternately.

30 Nm

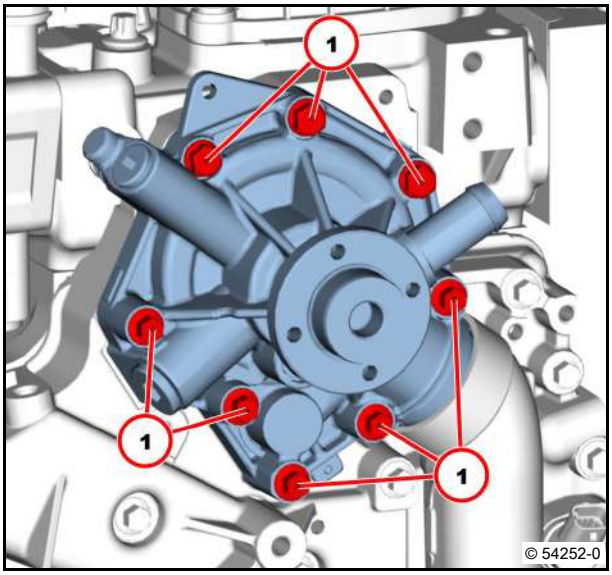

- Push in and hold the connector piece in the direction of the arrow with the special pliers (1)
- Insert the circlip (2) into the groove (3).
- Install coolant pipe.

Module 38

- Install ribbed / V belt pulley.

Module 37

- Replace ribbed belt / V-belt.

Operating Manual

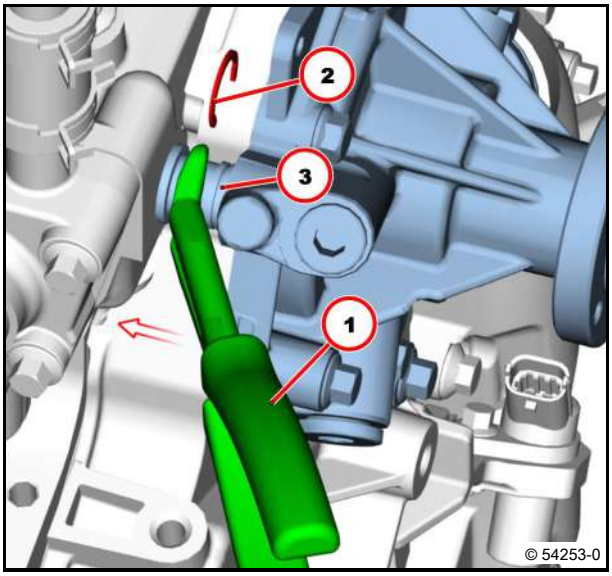

Coolant pump

Technical Data

Tightening specifications

ID no.	Name	Screw type	Notes / Remark	Value
A37 010	Coolant pump on cylinder head			30 Nm

For the tightening procedure according to torque using a torque wrench, a maximum variation of the tightening torque of +/- 10% is permissible.

Coolant pump

Drive components

Standard tools

1 V-rib belt pulley
2 Hexagon head screw 20 Nm

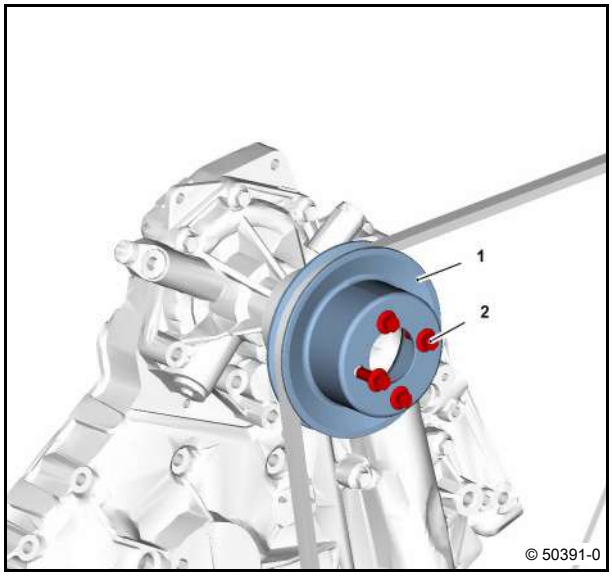

Coolant pump

V-rib belt pulley

Standard tools

1 V-rib belt pulley
2 Hexagon head screw 30 Nm

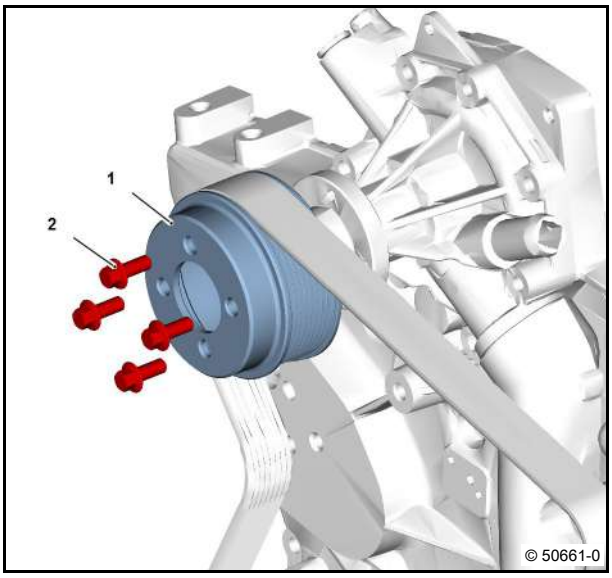

Thermostat housing

Removing and installing the thermostat

Standard tools

– Safety information / User information
– Operation manual

Attention!
The thermostat and thermostat housing are firmly connected together at the factory.

Collect leaking operating substances in suitable vessels and dispose of according to regulations.

Observe the appropriate operating instructions for emptying and filling the engine.

Removing the thermostat

1	Thermostat housing including thermostat	
4	Sealing ring	
5	Screw plug	65 Nm
6	Seal	
7	Hexagon head screw	30 Nm
8	Temperature sensor	25 Nm

Use a new sealing ring.

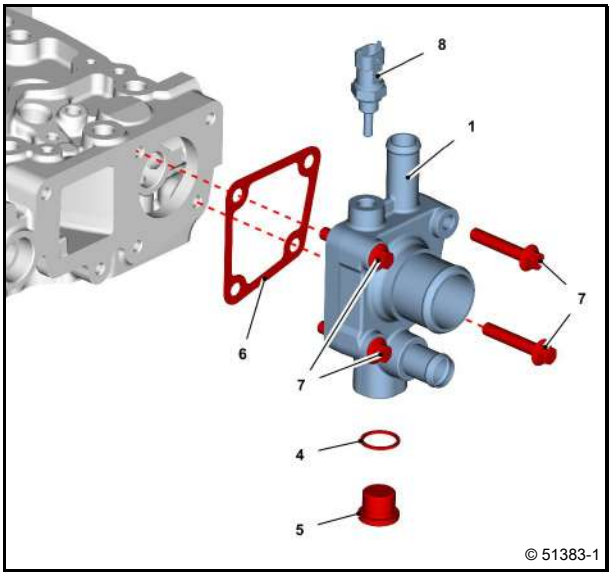

- Drain, collect and dispose of coolant according to regulations.
- Unscrew screws (1).
- Remove thermostat housing (2)
- Visually inspect the component.

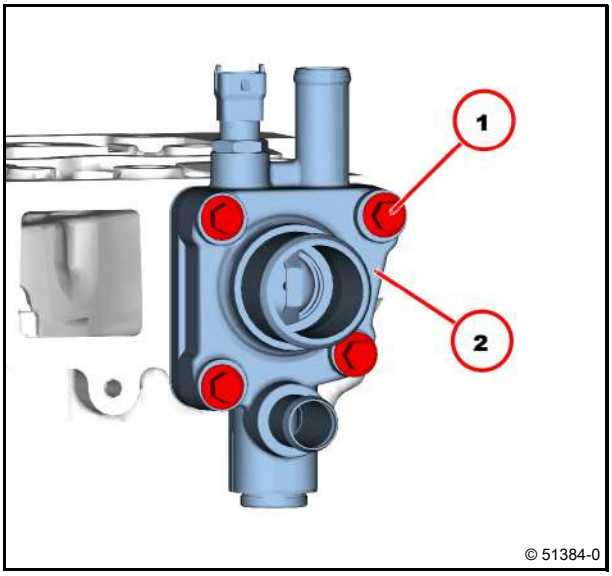

- Remove gasket (1).

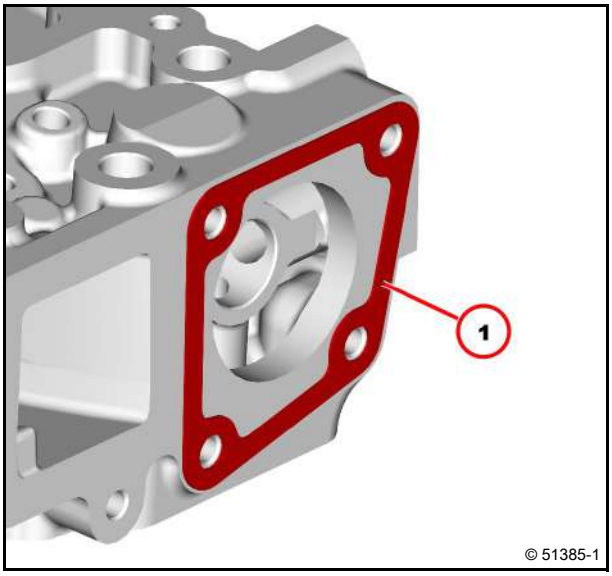

Installing the thermostat

Attention!
The venting hole (1) must be at the highest point.

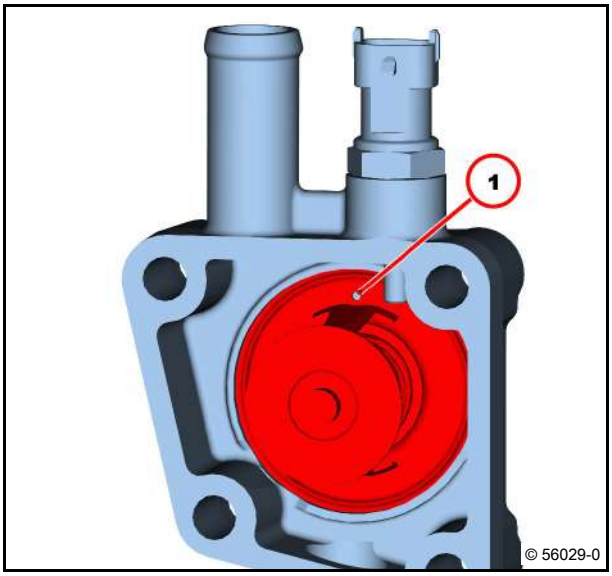

- Clean sealing surfaces.
- Insert screws (1).
- Fix new gasket (2) to the thermostat housing with screws.

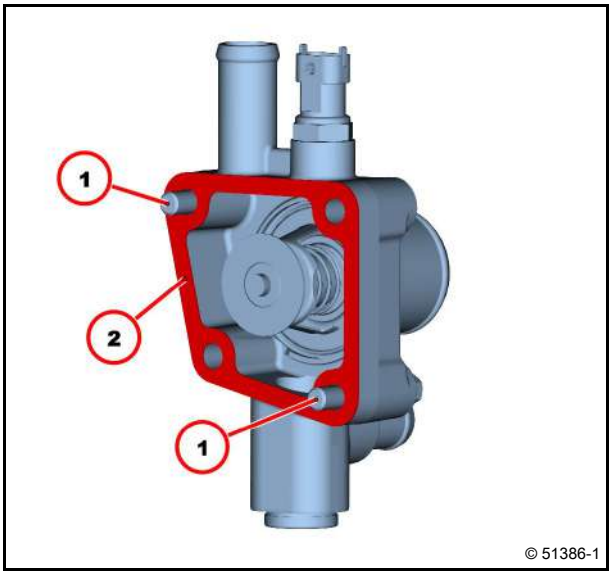

- Mount thermostat housing (1).
- Tighten screws (2).
- Fasten screws (3).

Thermostat housing

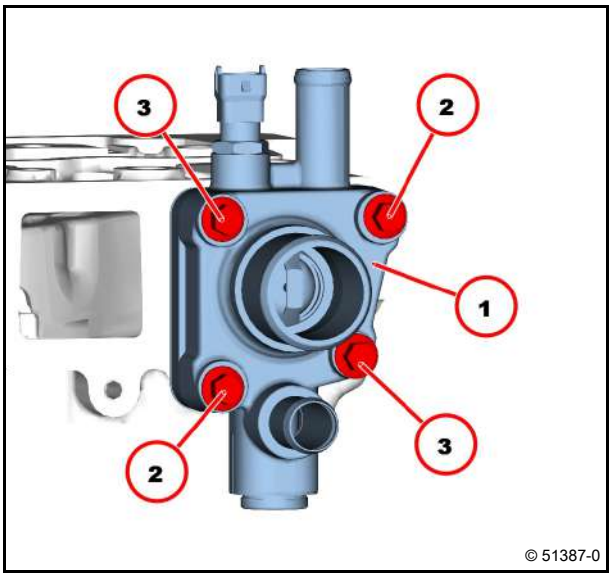

- Tighten all screws (1).

  30 Nm

- Fill cooling system according to the operating manual.

  Operation manual

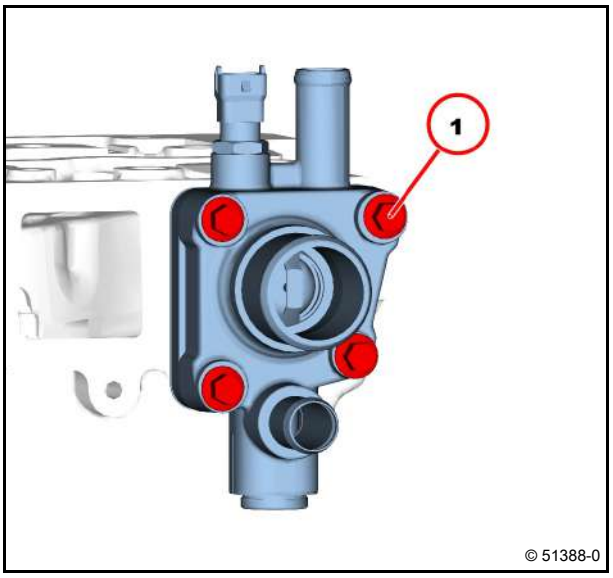

Thermostat housing
Technical Data

Tightening specifications

ID no.	Name	Screw type	Notes / Remark	Value
A38 001	Thermostat housing on cylinder head			30 Nm

For the tightening procedure according to torque using a torque wrench, a maximum variation of the tightening torque of +/- 10% is permissible.

Checking the thermostat (in the removed state)

Standard tools:
– Thermometer

– Safety information / User information

Danger!
Danger of injury!
Hot water and hot components.

Attention!
The thermostat and thermostat housing are firmly connected together at the factory.

Schematic diagram:
For better illustration, the thermostat is shown without the thermostat housing.

Checking thermostat

- Measure beginning of stroke, dimension (a).
- Note measured value, dimension (a).

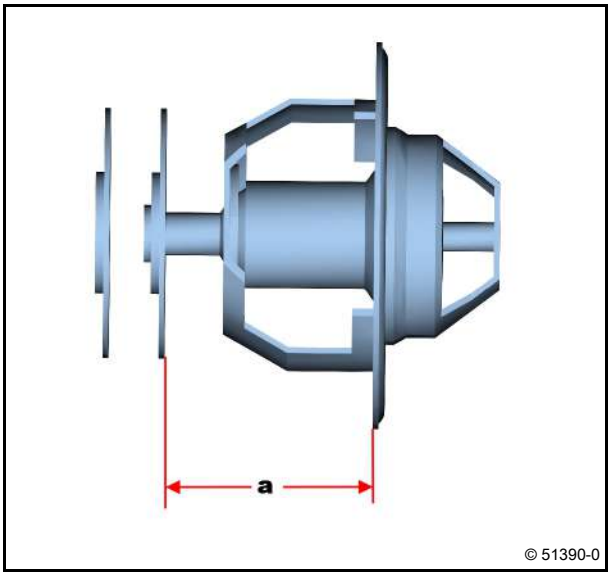

- Heat up the thermostat in the water bath.
- Determine beginning of opening.

In order to determine the exact beginning of opening, the temperature should be measured as close as possible to the thermostat.

Do not touch the thermostat.

The water should be continuously stirred for an even temperature distribution. The temperature rise should not take place faster than 1°C/min. Otherwise the beginning of opening will be delayed accordingly.

– Nominal value:

86 °C – 90 °C

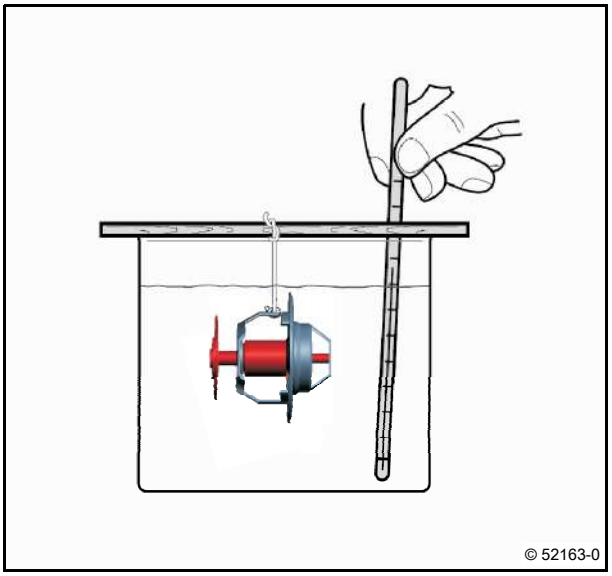

- Measure water temperature.
  - Nominal value:

    99 °C – 102 °C
- Measure end of stroke, dimension (b).
- Note measured value, dimension (b).

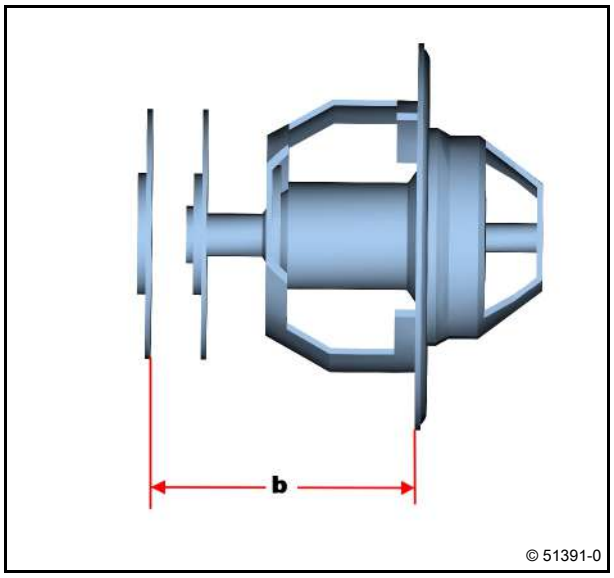

- Determine stroke.

Calculation example	
Desired:	Stroke
Given:	-
Measured:	Beginning of stroke, dimension (a)
	End of stroke, dimension (b)
Calculation:	Dimension (b) - dimension (a)
Result:	= stroke

- Compare result with setpoint value.
  - Nominal value:

    9 mm

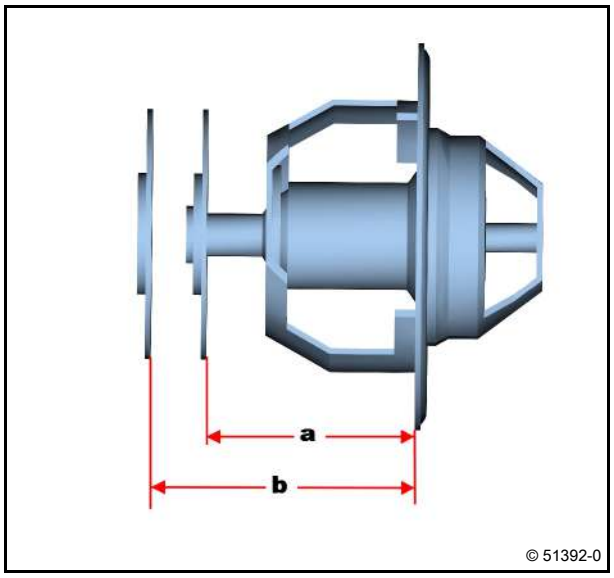

Thermostat housing

Technical Data

Testing and setting data

ID no.	Name	Additional information	Value
P38 11	Thermostat, start of opening		86 °C – 90 °C
P38 13	Thermostat, stroke	at 99 °C – 102 °C, minimum	9 mm
P38 14	Thermostat, stroke, test temperature		99 °C – 102 °C

Coolant pipes

Line

Standard tools

– Safety information / User information

1 Coolant line
10 Hexagon head screw 14 Nm
11 Fitting screw 14 Nm
12 Washer

Note different screw lengths.

Position
2

30 Nm

- Tighten screws alternately.

Attention!
See the spare parts documentation.

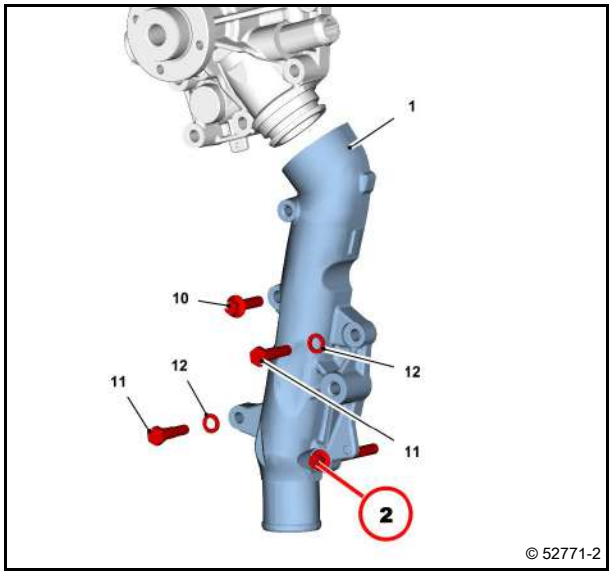

Line
(Thermostat housing, lubricating oil cooler, coolant line)

Standard tools

Special tools:
- Spring band pliers 01899112
- Plugs/caps 01899144

- Safety information / User information

Collect leaking operating substances in suitable vessels and dispose of according to regulations.

Observe the appropriate operating instructions for emptying and filling the engine.

1	Elbow	
2	Spring band clip	
3	Coolant line	
4	Pipe clip	
5	Hose pipe	
6	Hexagon head screw	30 Nm
7	Support plate	
8	Hexagon head screw	13 Nm

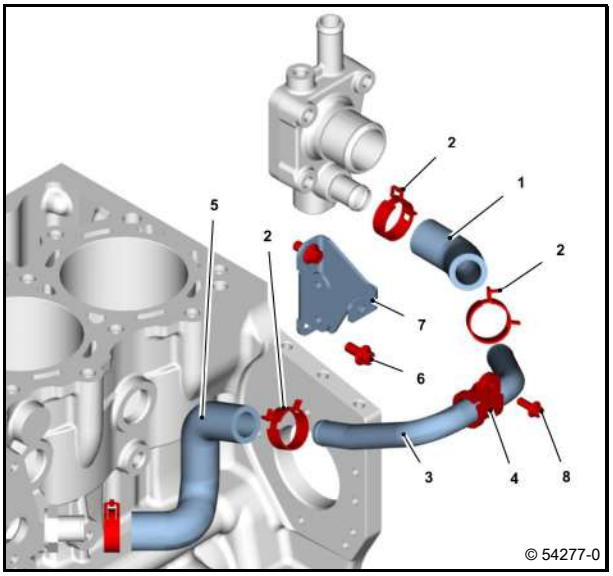

© 54277-0

Position
5

Attention!
Lay the hose pipe free from chafing and tension.

Marking (1) faces the crankcase.

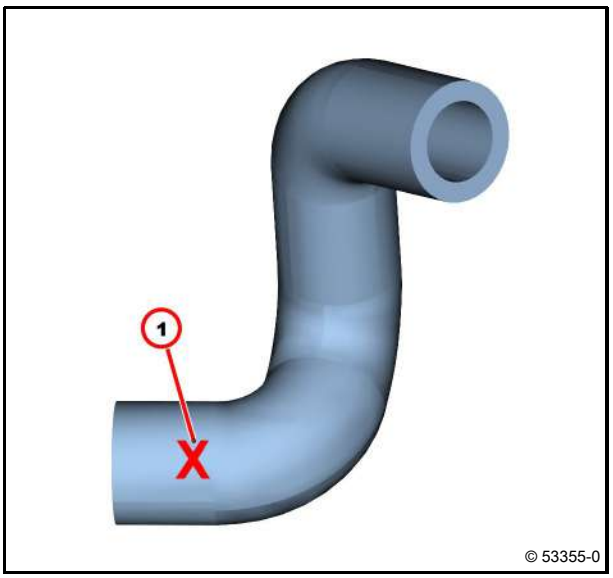

© 53355-0

Pressure fan

Standard tools

1 Pressure fan
2 Hexagon head screw 30 Nm

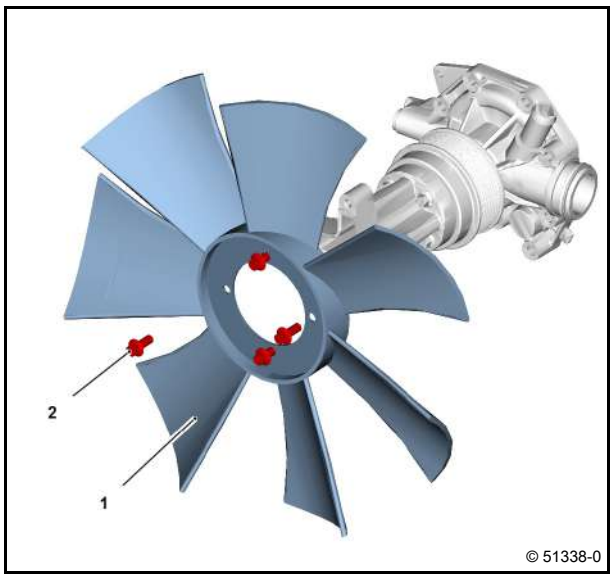

Exhaust pipe

Removing and installing the exhaust line

Standard tools

Removing exhaust line

1 Exhaust line
2 Seal
3 Hexagon head screw

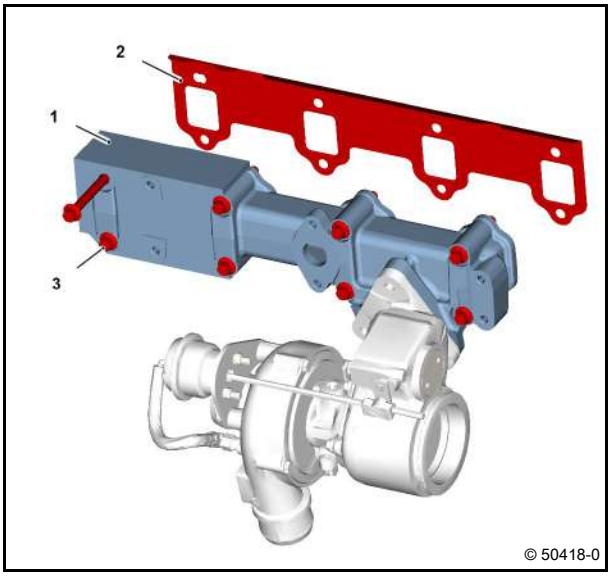

- Remove turbocharger.
  Module 43
- Remove cooler.
  Module 41
- Unscrew all screws (1).
- Remove exhaust line (2).
- Remove gasket (3).

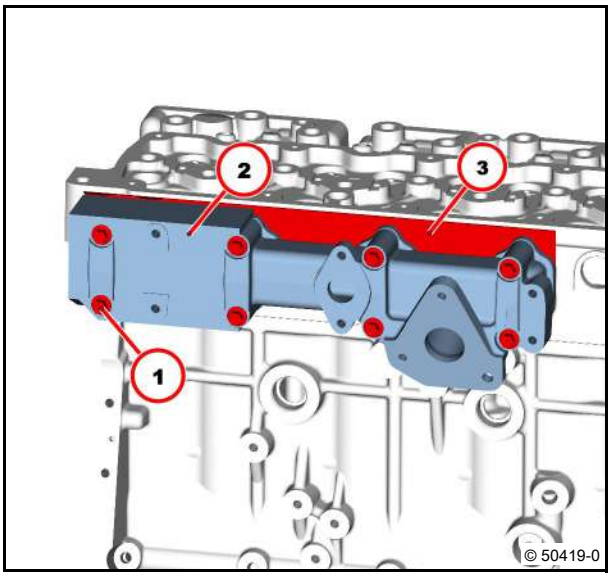

Installing exhaust line

- Visually inspect the components.
- Clean sealing surfaces.
- Turn in screws (arrows).
- Fasten new seal (1) with screws on exhaust line.

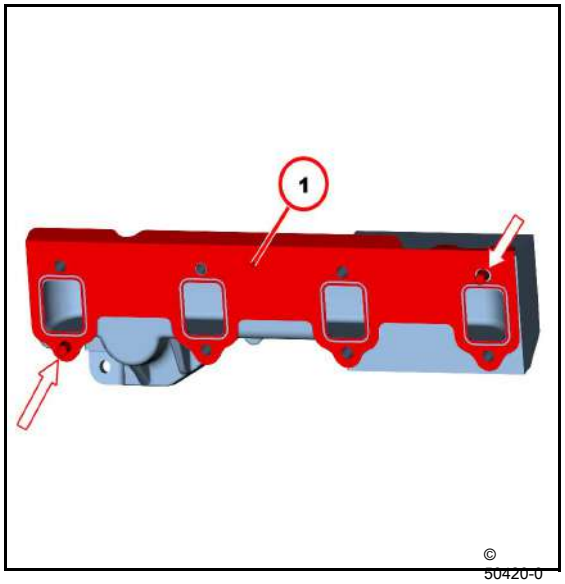

6

- Clean sealing surfaces.
- Mount exhaust line (1).

Note installation position.

- Fasten all screws (2).

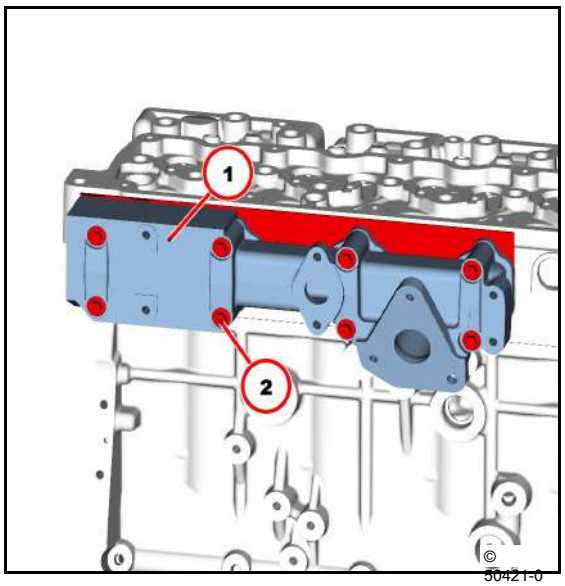

- Tighten the screws according to the tightening sequence.

30 Nm

- Install the turbocharger.

Module 43

- Install cooler.

Module 4
1

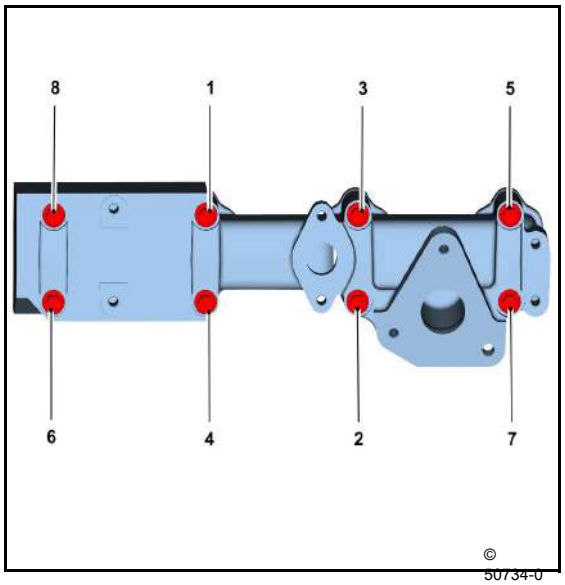

Technical Data

Tightening specifications

ID no.	Name	Screw type	Notes / Remark	Value
A41 001	Exhaust line on cylinder head		Observe tightening sequence	30 Nm

For the tightening procedure according to torque using a torque wrench, a maximum variation of the tightening torque of +/- 10% is permissible.

Removing and installing the flutter valve

Standard tools

– Fitting compound DEUTZ AP1908

– Safety information / User information

1 Cooler
2 Exhaust gas recirculation valve
6 O-ring
7 O-ring
8 Flutter valve

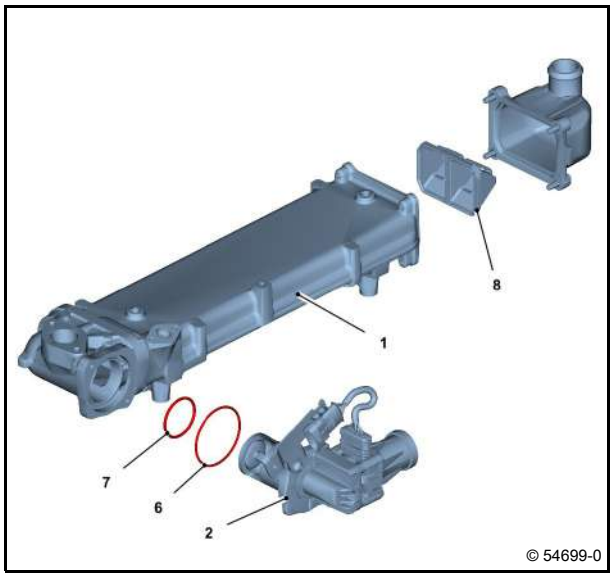

- Remove hose pipe (1).
  Module 22
- Unscrew screws (2).
- Remove the housing (3).

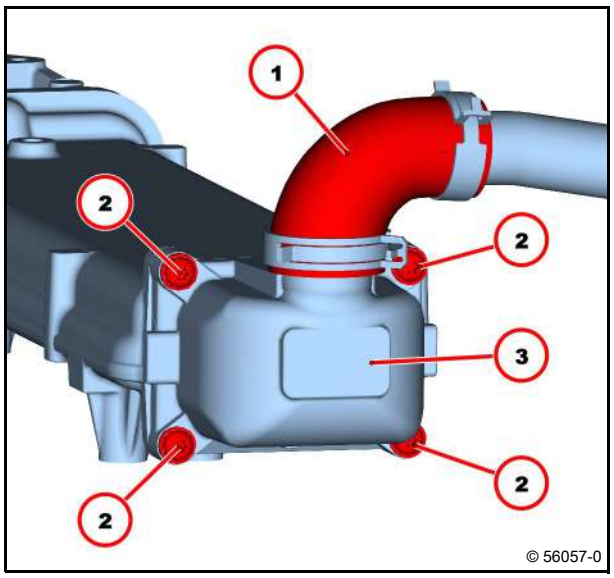

- Remove flutter valve (1).
- Visually inspect the components.

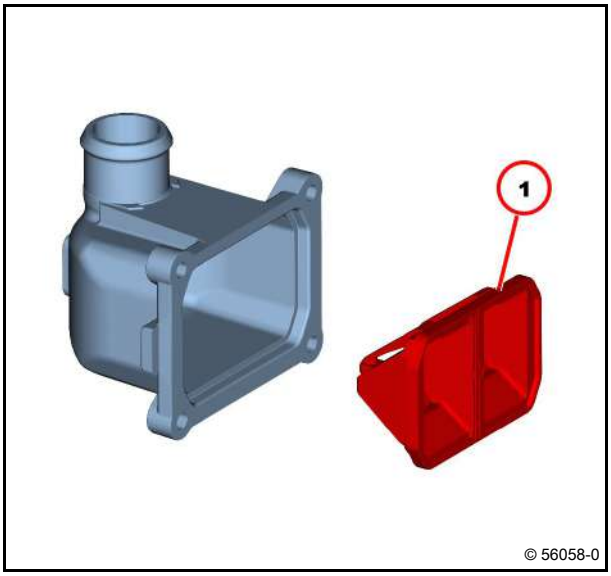

Installing the flutter valve

- Clean housing.
- Clean sealing surfaces.
- Insert sealing ring with mounting compound.

Attention!
Ensure that the installation location is free from faults.

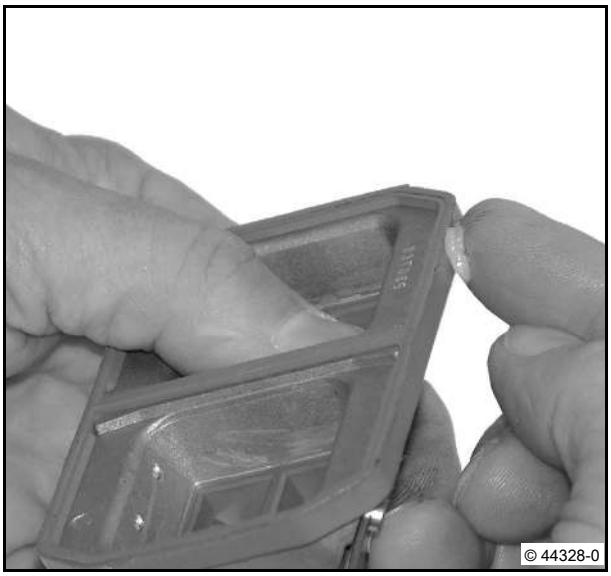

- Insert flutter valve (1).

Attention!
Ensure that the installation location is free from faults.

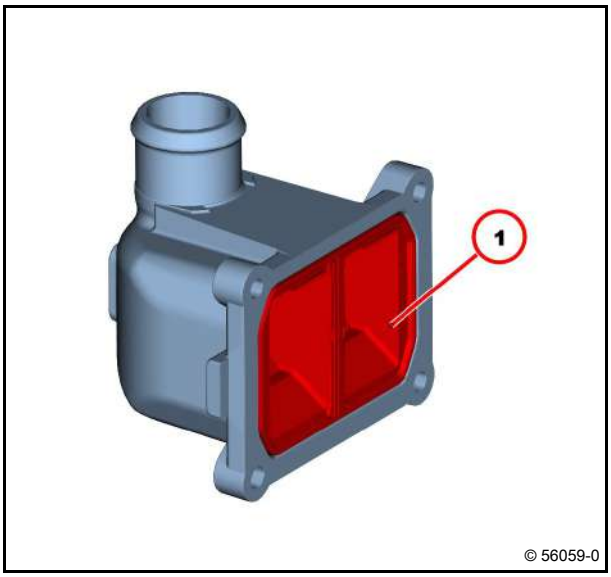

- Mount housing (1).
- Tighten screws (2).
- Tighten screws (2).
- Mount hose pipe (3).

Module 22

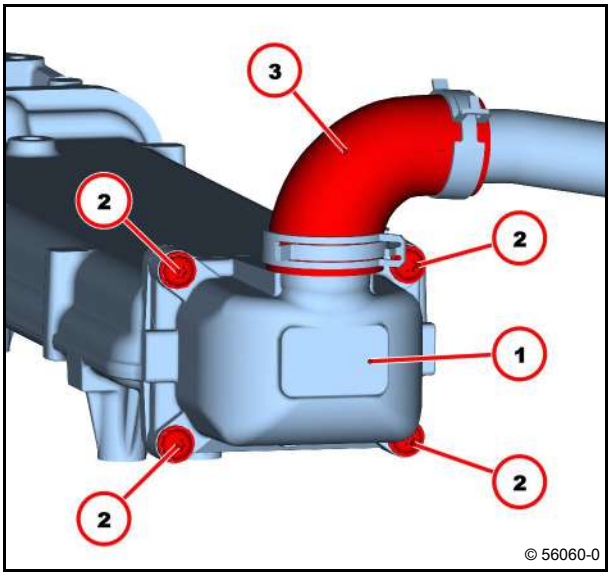

Removing and installing the cooler

Standard tools

– Safety information / User information

Collect leaking operating substances in suitable vessels and dispose of according to regulations.

Observe the appropriate operating instructions for emptying and filling the engine.

Removing the cooler

1 Cooler
2 Control valve
6 O-ring
7 O-ring
8 Flutter valve

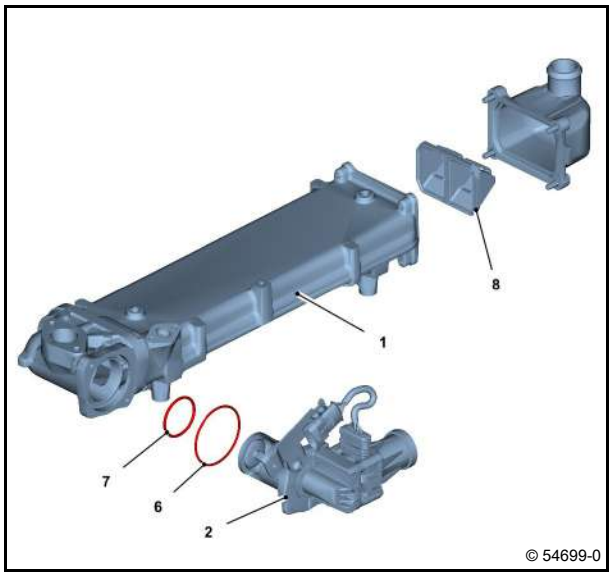

- Remove coolant pipes.
  Module 41
- Unlock cable plug (1) and disconnect.
- Unscrew screws (2).
- Remove cooler (3).
- Visually inspect the component.

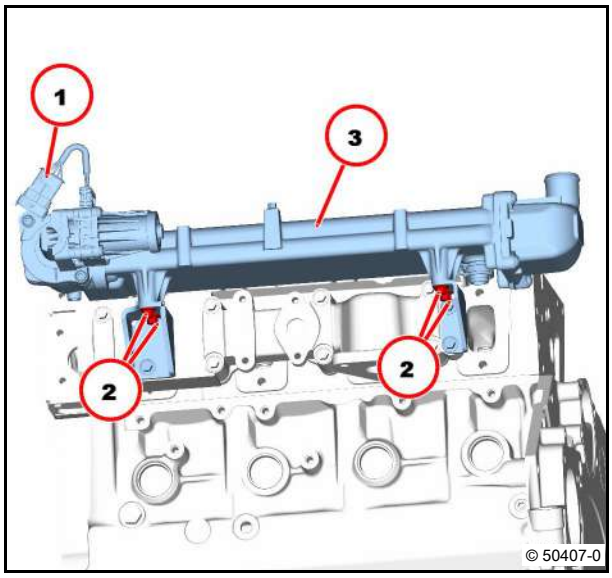

Installing the cooler

- Mount cooler (1).
- Tighten screws (2).
- Tighten screws (2).

20 Nm

- Insert cable plug (3) and lock into place.

Ensure that the connection is perfect.

- Attach coolant lines.

Module 41

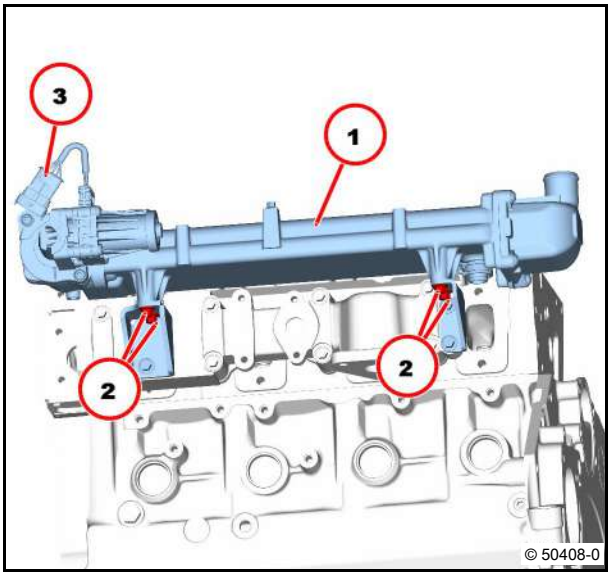

Technical Data

Tightening specifications

ID no.	Name	Screw type	Notes / Remark	Value
A41 052	Cooler on holder (exhaust gas recirculation)			20 Nm

For the tightening procedure according to torque using a torque wrench, a maximum variation of the tightening torque of +/- 10% is permissible.

Removing and installing the exhaust gas return valve

Standard tools

Special tools:
– Disassembly tool 02992127

– Fitting compound DEUTZ AP1908
– Ethanol C_2H_5OH CAS No. 64-17-5 (not in the scope of delivery of DEUTZ AG)

– Safety information / User information
– Operation manual

Danger!

Hot components!
Danger of burns / explosion!
Let the engine / components cool down sufficiently (to at least ambient temperature).

Observe safety regulations and national regulations when working with ethanol.

Attention!

Ensure utmost cleanliness for all work.
Remove any paint residue and dirt particles before disassembly.
Clean the area around the components concerned carefully. Blow wet parts dry with compressed air.
Close all connections immediately after opening with new, clean plugs/caps.
Do not remove plugs/caps until immediately before assembling.

Collect leaking operating substances in suitable vessels and dispose of according to regulations.

Observe the appropriate operating instructions for emptying and filling the engine.

Removing the exhaust gas return valve

1 Cooler
2 Exhaust gas recirculation valve
6 O-ring
7 O-ring
8 Flutter valve

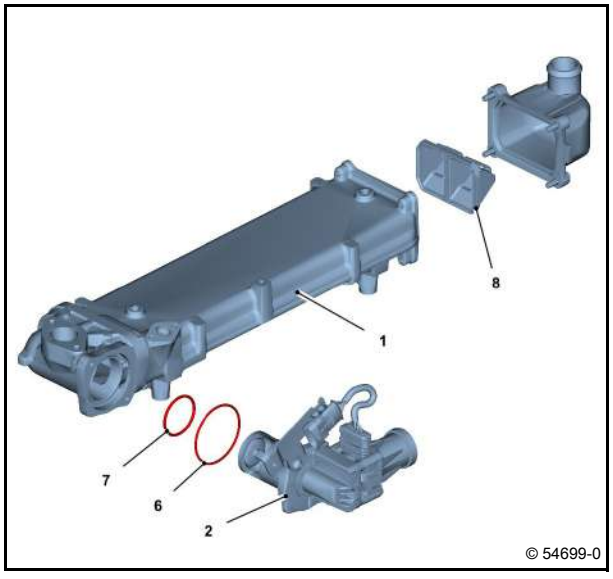

- Drain, collect and dispose of coolant according to regulations.
- Disconnect the battery.
- Remove the compensator.

  Module 41

- Unlock cable plug (1) and remove.
- Push latch (2) in the direction of the arrow.
- Pull off cable plug (3).

Attention!
To avoid electrostatic discharges, do not touch the plug contacts with your bare hands.
Pay attention to utmost cleanliness.

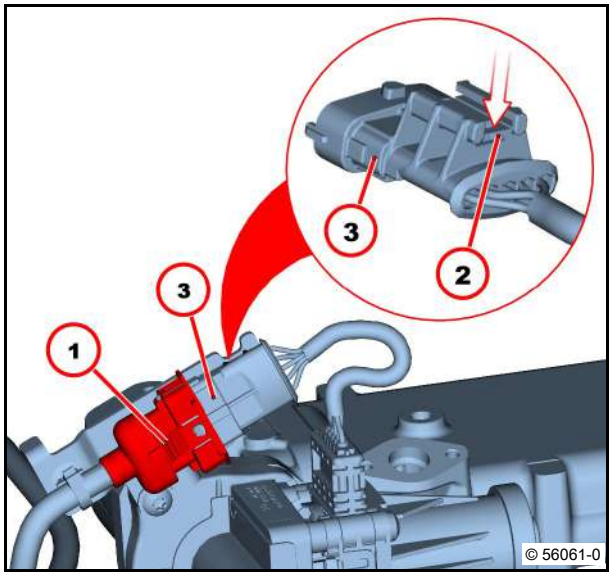

- Unscrew screws (1).
- Swing holder (2) to the side.

Note installation position.

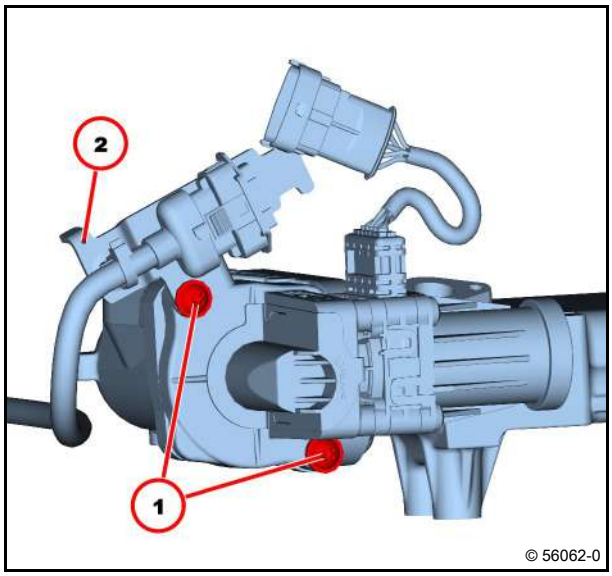

- Apply ethanol.
  - to joint (1)
  - in opening (2)

Allow ethanol to take effect until the incrustation in the seat is removed.

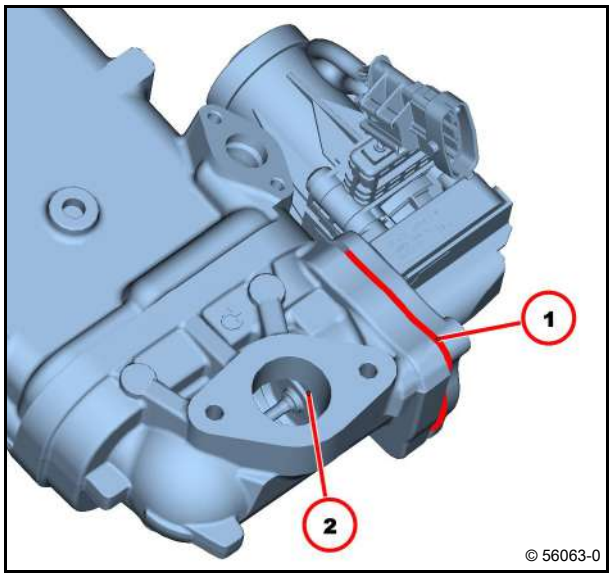

Attention!
Do not exert force onto the crankcase.
Do not exert force onto the cable strand.

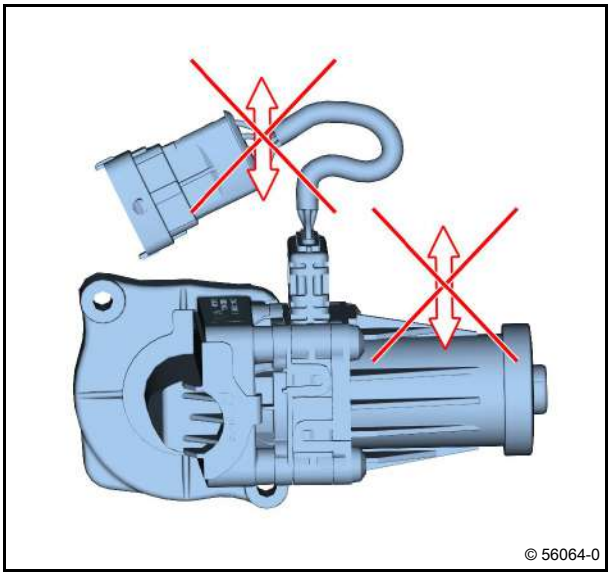

Attention!
Do not damage the components.
Do not twist the exhaust gas recirculation valve.

- Pry out the exhaust gas recirculation valve (1) evenly at the recesses (2).
- Pull out exhaust gas recirculation valve (1) evenly.
  - Distance approximately 70 mm

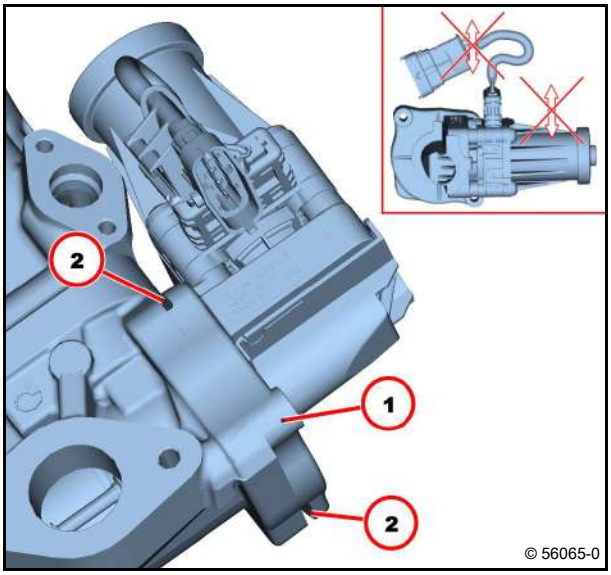

Attention!
See the spare parts documentation.

- For the version with a sealing disc:

Attention!
Note installation position.

- Remove sealing disc (1).

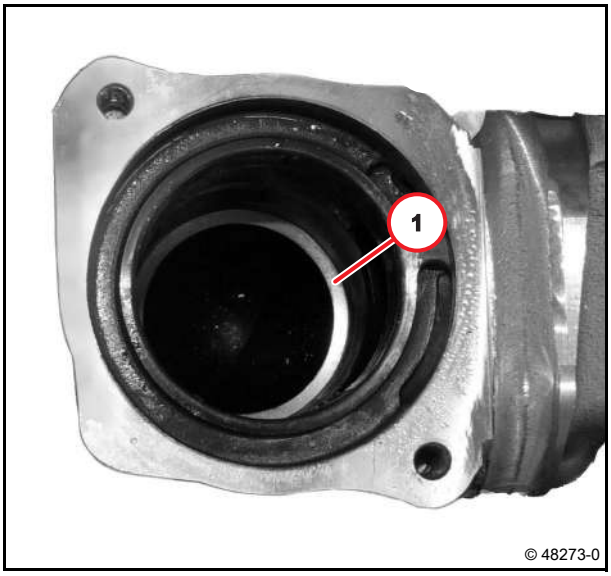

- Remove the O-rings (1) with the disassembly tool.

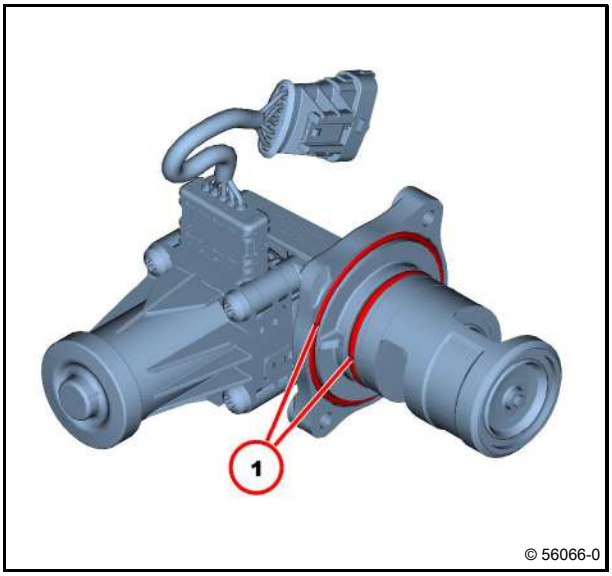

- Check components for damage.

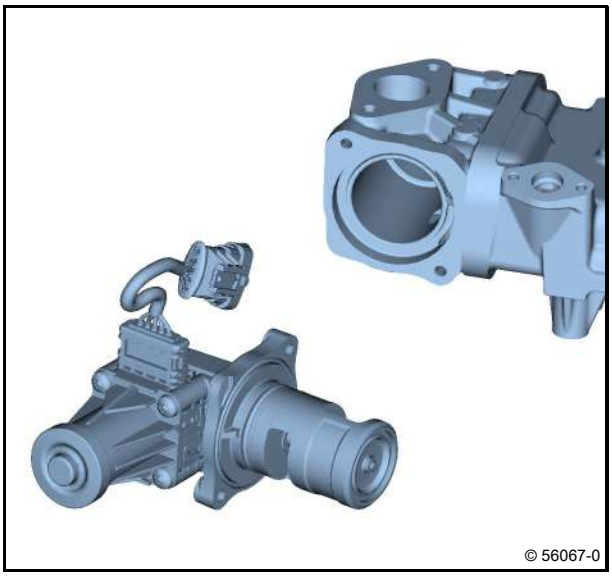

Installing the exhaust gas return valve

- Clean contact surfaces.
- Clean the locating hole.
- Coat new round sealing rings slightly with mounting compound.

Attention!
Do not twist or overstretch round sealing rings.
Do not damage O-rings!

- Mount new O-ring (1).

Use a suitable assembly aid.
Provide protection for sharp edges.

- Mount new round sealing ring (2).

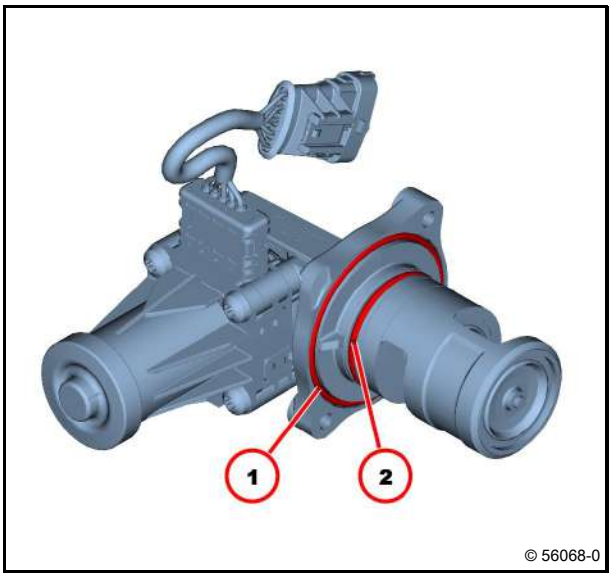

Attention!
See the spare parts documentation.

– For the version with a sealing disc:

- Insert sealing disc (1).

Attention!
Ensure that the installation location is free from faults.
The cone is facing the contact surface of the cooler.

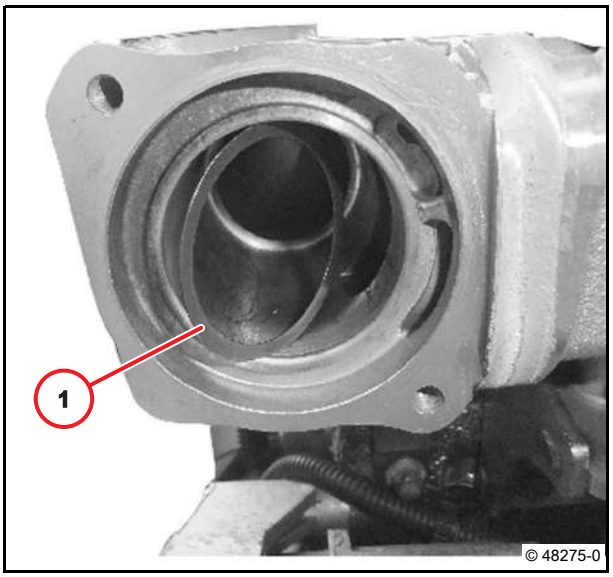

Attention!
Do not twist the exhaust gas recirculation valve.
Do not exert force onto the crankcase.
The exhaust gas recirculation valve must not be tightened to the stop via the screws.
Ensure that the installation location is free from faults.

- Insert exhaust gas recirulation valve (1) evenly to the stop.

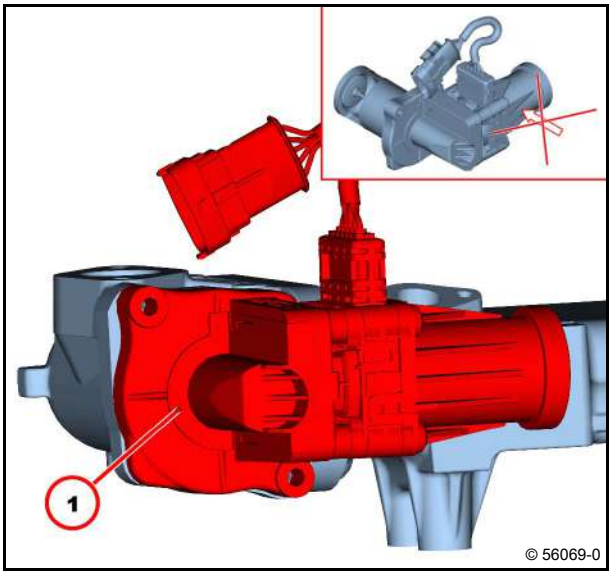

- Position holder (1).

Ensure that the installation location is free from faults.

Attention!
Self-tapping screws.
Do not exert any great axial force onto the screws when tightening.
Danger of forming a "second" thread turn.

- Turn in screws (2) a few turns.

– at least 3 revolutions

- Tighten screws (2).

8 Nm

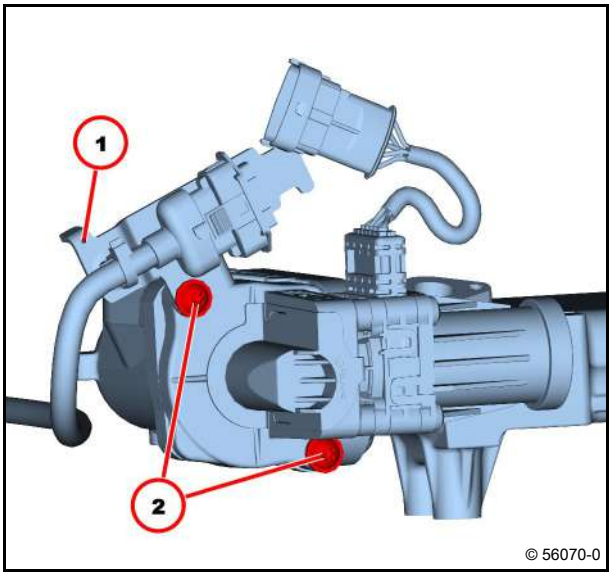

Attention!
To avoid electrostatic discharges, do not touch the plug contacts with your bare hands.
Pay attention to utmost cleanliness.

- Plug in the cable plug (1).

Attention!
Retaining lug (2) must latch into holder.

- Insert cable plug (3) and lock into place.
- Install the compensator.

Module 41

- Connect the battery.
- Fill cooling system according to the operating manual.

Operation manual

- Check gas system for leaks.

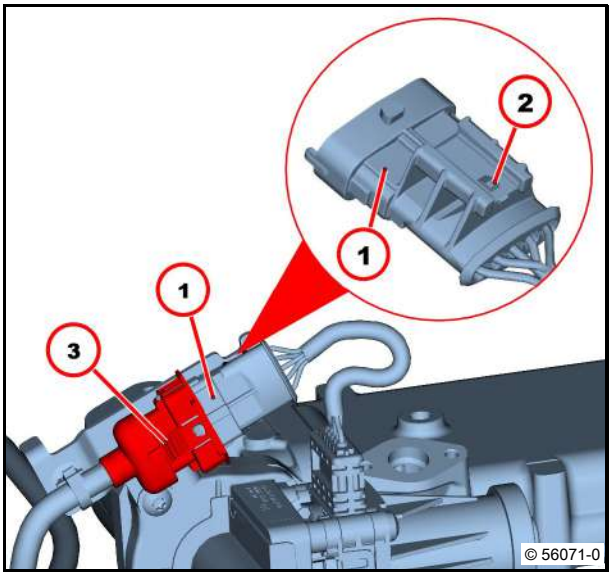

Technical Data

Tightening specifications

ID no.	Name	Screw type	Notes / Remark	Value
A41 049	Exhaust gas recirculation valve on cooler		self-tapping screws.	8 Nm

For the tightening procedure according to torque using a torque wrench, a maximum variation of the tightening torque of +/- 10% is permissible.

Connection
(Crankcase housing, exhaust gas circulation, coolant line)

Standard tools

– Fitting compound
  DEUTZ AP1908

Collect leaking operating substances in suitable vessels and dispose of according to regulations.

Observe the appropriate operating instructions for emptying and filling the engine.

1 Hose nozzles
2 O-ring
3 Hexagon head screw 20 Nm

Use new round sealing ring.

- Lightly coat new round sealing ring with DEUTZ AP1908 mounting compound.

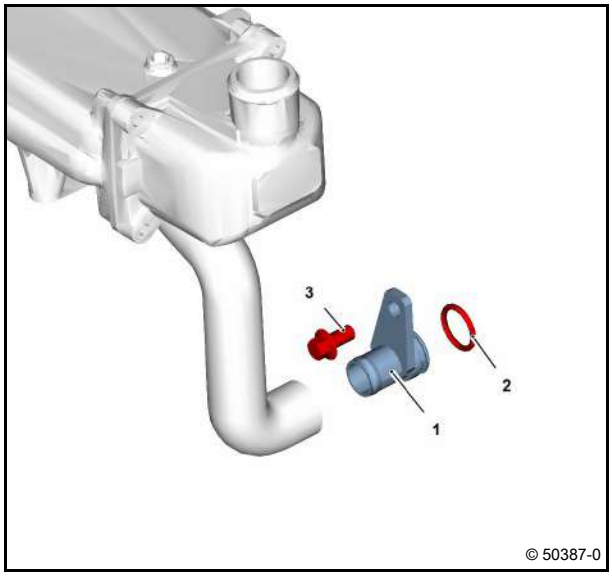

Screw plug
(Thermostat housing, exhaust gas circulation, coolant line)

Standard tools

– Safety information / User information

Collect leaking operating substances in suitable vessels and dispose of according to regulations.

Observe the appropriate operating instructions for emptying and filling the engine.

1	Screw plug	80 Nm
2	O-ring	

Use new round sealing ring.

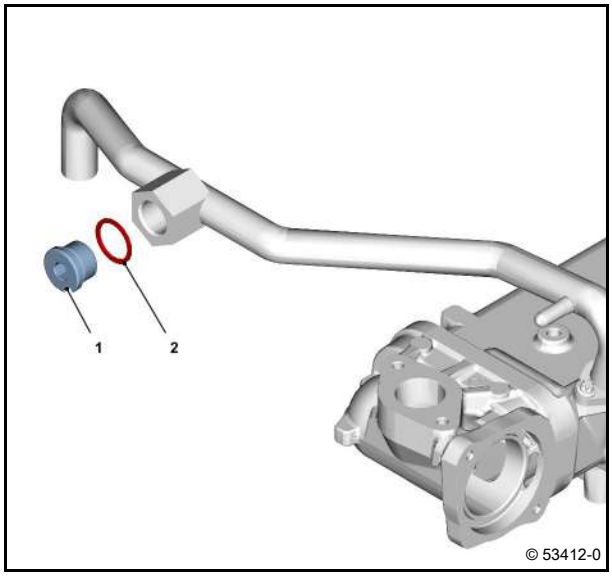

Holder

Standard tools

– Safety information / User information

1	Holder	20 Nm
2	Hexagon head screw	20 Nm

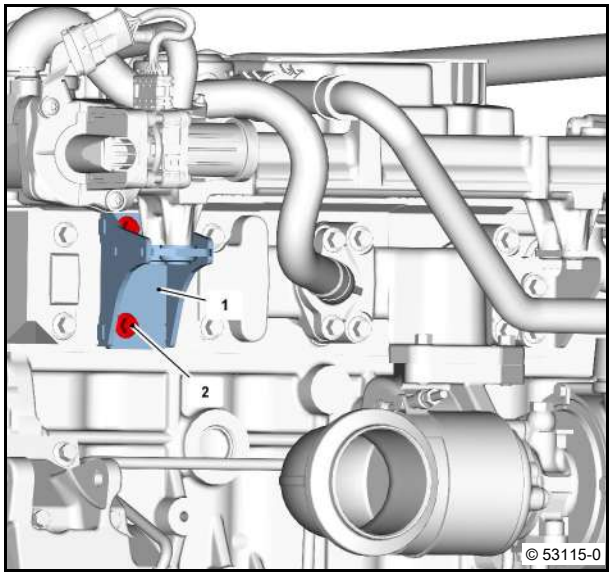

Holder

Standard tools

– Safety information / User information

1	Holder	20 Nm
2	Hexagon head screw	20 Nm

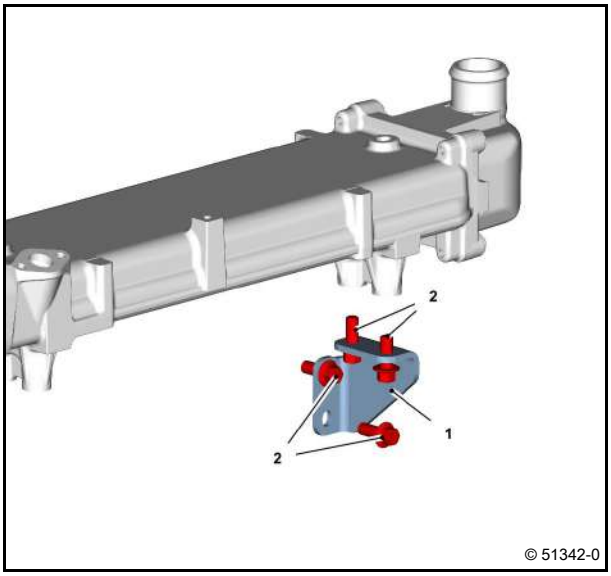

Compensator structure (Exhaust line)

Standard tools

1 Compensator
2 Seal
3 Hexagon head screw20 Nm

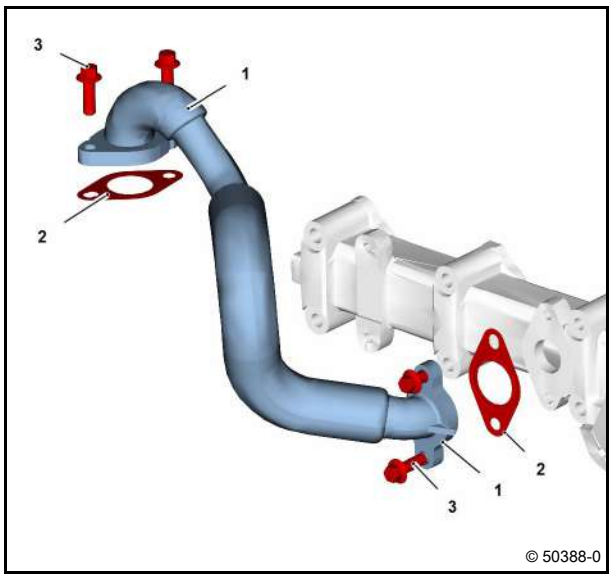

Use a new gasket.

Attention!
Check seal.

Line
(Crankcase housing, exhaust gas circulation, coolant line)

Standard tools

Special tools:
– Spring band pliers 01899112
– Plugs/caps 01899144

Collect leaking operating substances in suitable vessels and dispose of according to regulations.

Observe the appropriate operating instructions for emptying and filling the engine.

1 Hose pipe
2 Spring band clip

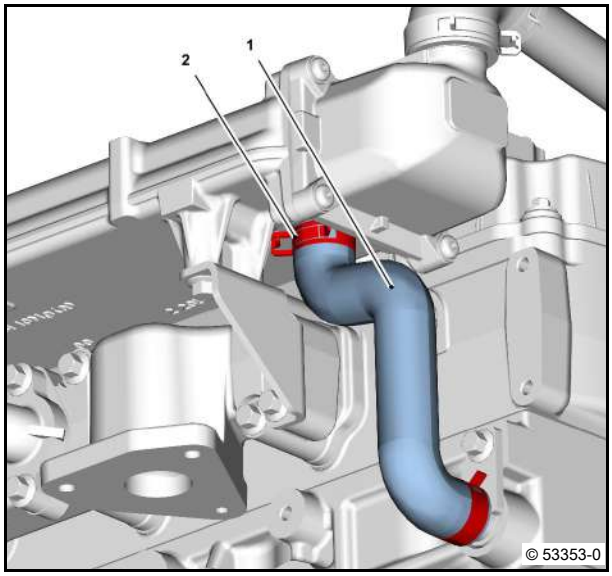

Attention!
Lay the hose pipe free from chafing and tension.

Line
(Thermostat housing, exhaust gas circulation, coolant line)

Standard tools

Special tools:

– Torx tool set	01899092
– Spring band pliers	01899112
– Plugs/caps	01899144

Collect leaking operating substances in suitable vessels and dispose of according to regulations.

Observe the appropriate operating instructions for emptying and filling the engine.

1	Coolant line	
2	Torx screw	10 Nm
3	Hexagon head screw	8 Nm
4	Pipe clip	
5	Seal	
6	Rubber sleeve	
7	Spring band clip	
8	Sealing ring	
9	Screw plug	80 Nm

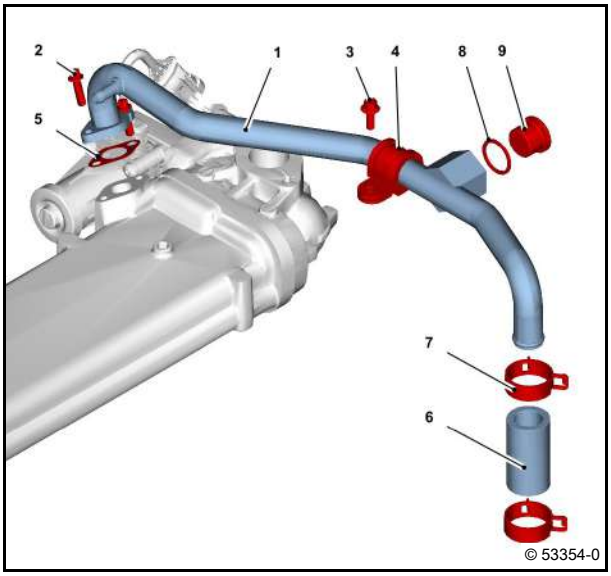

Attention!
Lay the hose pipe free from chafing and tension.

Use a new gasket.

Use a new sealing ring.

Removing and installing the turbocharger

Standard tools

Removing turbocharger

1 Exhaust turbocharger
2 Seal
3 Hexagon head screw

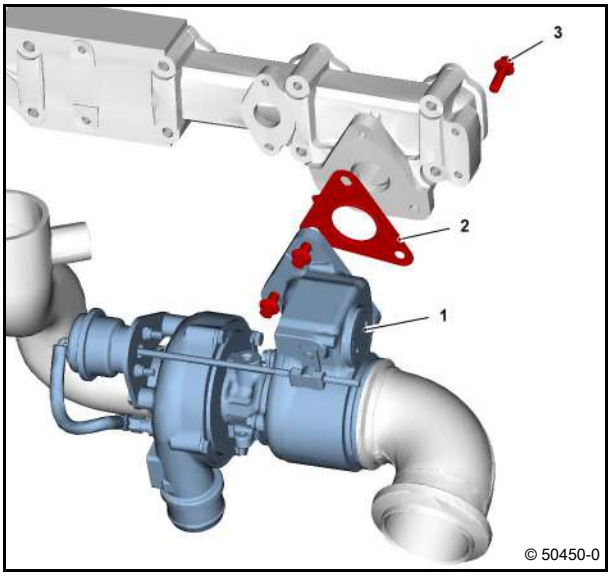

- Remove intake nozzle.
  Module 22
- Remove the lubricating oil line.
- Remove lubricating oil return line.
  Module 16
- Remove exhaust manifold.
  Module 43
- Unscrew screw (1).

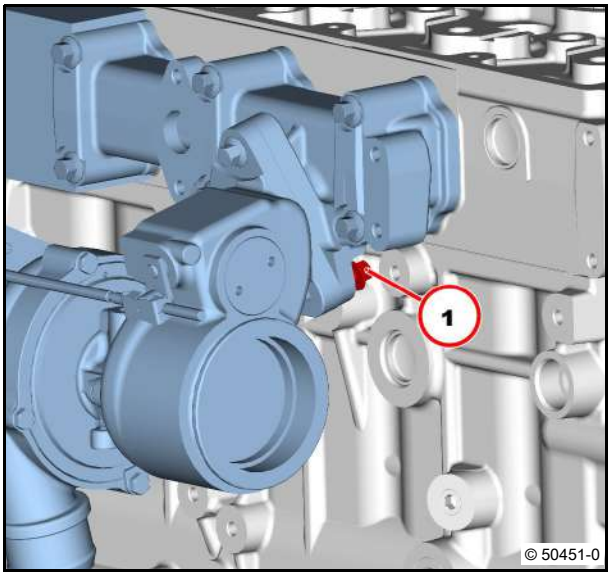

- Unscrew screws (1).
- Remove turbocharger (2).
- Remove gasket (3).
- Visually inspect the component.

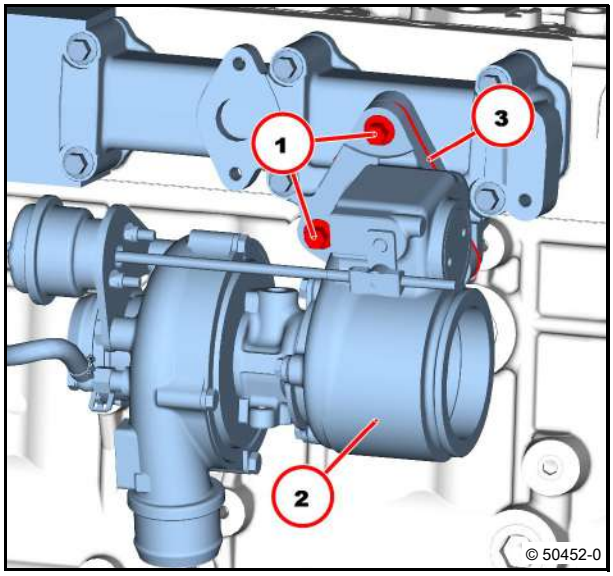

Installing the turbocharger

- Clean sealing surfaces.
- Mount gasket (1).
- Mount turbocharger (2).
- Fasten screws (3).

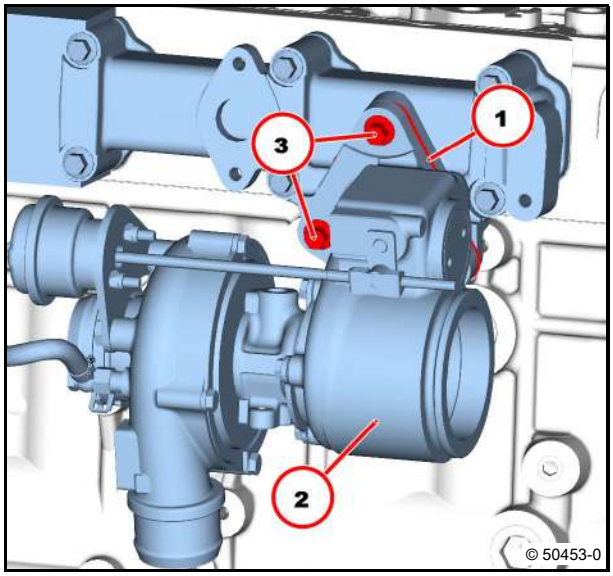

- Fasten screw (1).
- Tighten screw (1).

  30 Nm
- Tighten screws (2).

  30 Nm
- Fit intake nozzle.

  Module 22
- Install lubricating oil line.
- Install lubricating oil return line.

  Module 16
- Install exhaust manifold.

  Module 43

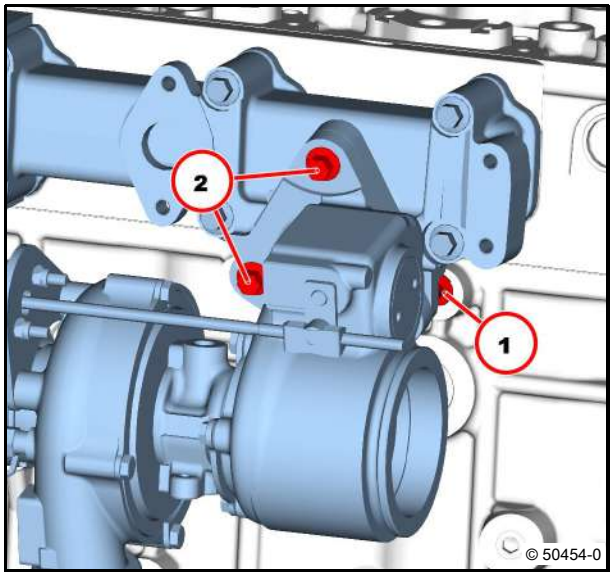

Technical Data

Tightening specifications

ID no.	Name	Screw type	Notes / Remark	Value
A43 020	Turbocharger on exhaust line			30 Nm

For the tightening procedure according to torque using a torque wrench, a maximum variation of the tightening torque of +/- 10% is permissible.

Exhaust manifold (exhaust turbocharger)

Standard tools

– Safety information / User information

1 Exhaust line
2 Clip 12 Nm
3 Clip 12 Nm
4 Seal

Note installation position.
Use a new gasket.

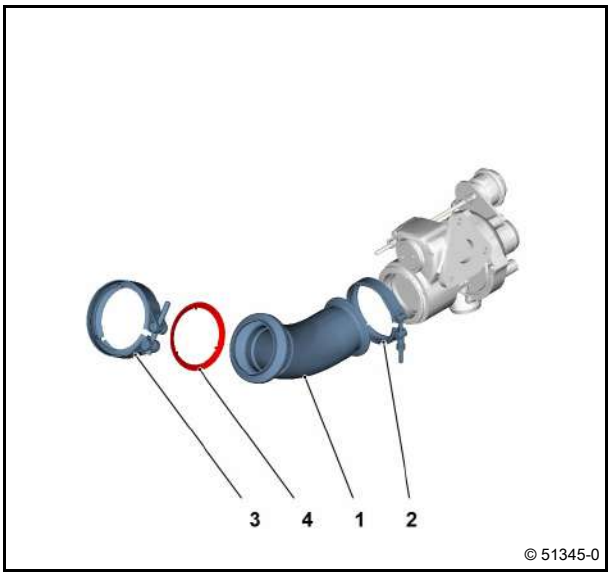

Removing and installing the belt tensioner (V-rib belt, level 1)

Standard tools

– Operation manual

Removing the belt tensioner

1 Belt tensioner
2 Deflection pulley — 55 Nm
3 V-rib belt
4 Cylinder head screw

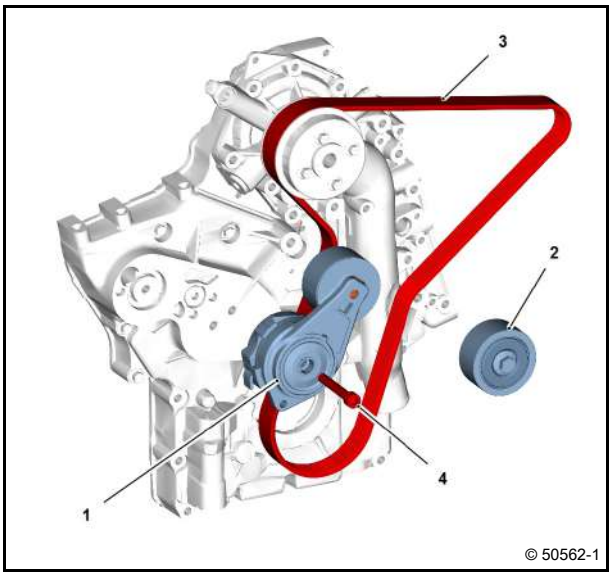

- Remove V-rib belt.

  Operation manual
- Unscrew screw (1).
- Remove belt tightener (2).
- Visually inspect the component.

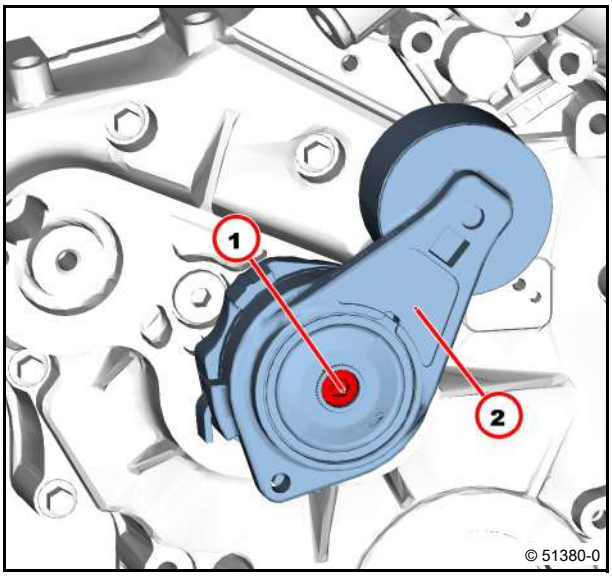

Installing the belt tensioner

- Mount belt tensioner (1).
- Fasten screw (2).
- Tighten screw (2).

  55 Nm

- Fit the V-rib belt according to the running direction.

  Operation manual

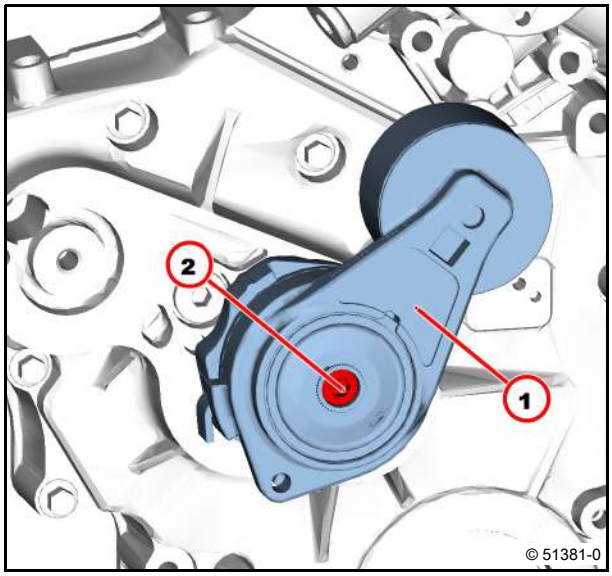

Technical Data

Tightening specifications

ID no.	Name	Screw type	Notes / Remark	Value
A44 041	Belt tensioner on gearcase			55 Nm

For the tightening procedure according to torque using a torque wrench, a maximum variation of the tightening torque of +/- 10% is permissible.

Removing and installing the generator (Clamping latch)

Standard tools

- Safety information / User information
- Operation manual

Removing the generator

1 Clamping strap
2 Threaded piece
3 Hexagon head screw
4 Washer
5 Hexagon head screw
6 Hexagon head screw
7 Spacing sleeve
8 Hexagon head screw
9 Hexagonal nut

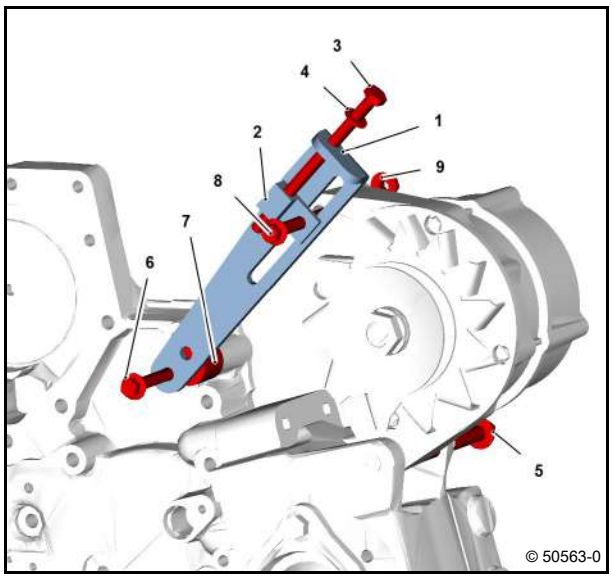

- Disconnect the battery's negative terminal.
- Remove plus cable.
- Pull out cable plug (1).

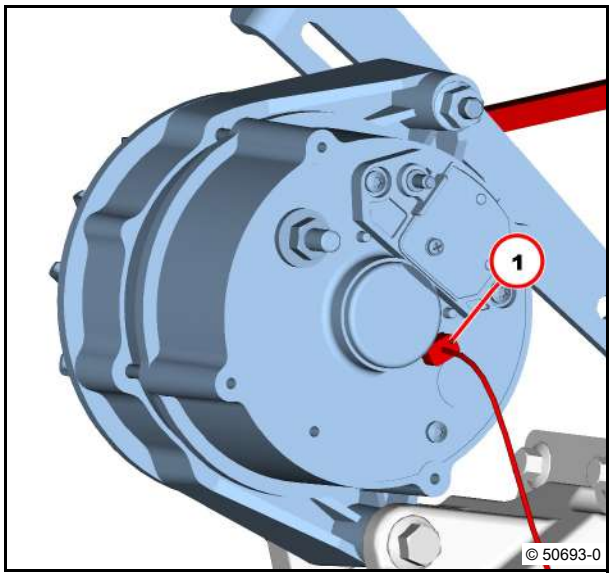

- Loosen screw (1).
- Hold nut (2).
- Unscrew screw (3).
- Loosen screws (4).
- Swing generator (5) in direction of arrow.
- Remove V-belt.

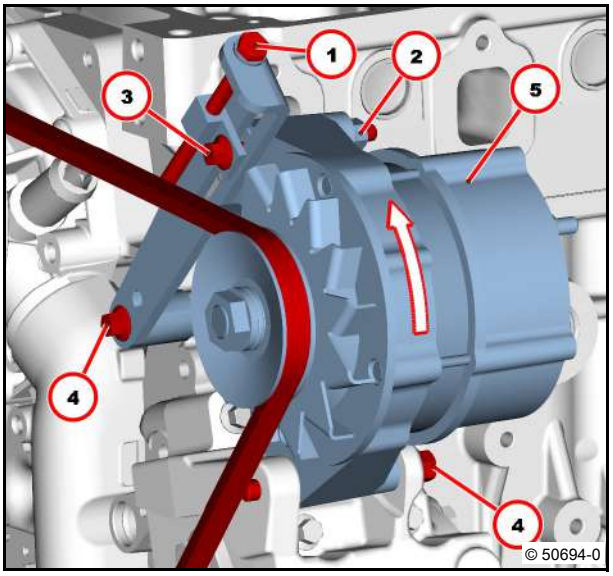

- Unscrew screw (1).
- Remove generator (2).
- Visually inspect the components.

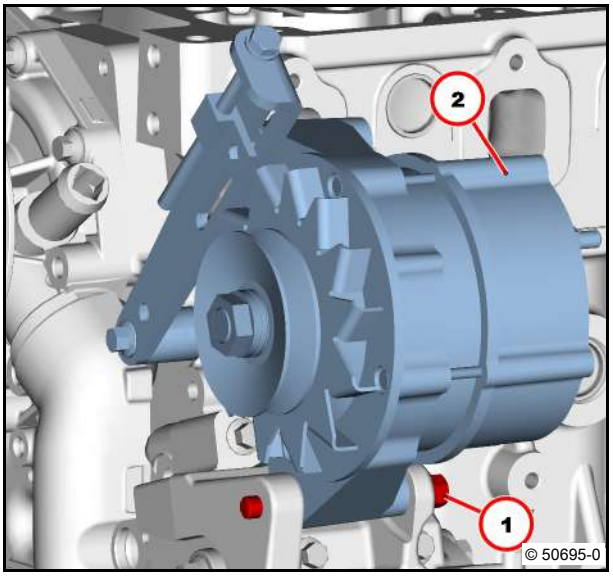

Installing the generator

- Mount generator (1).
- Fasten screw (2).
- Insert screw (3).
- Screw on nut (4).

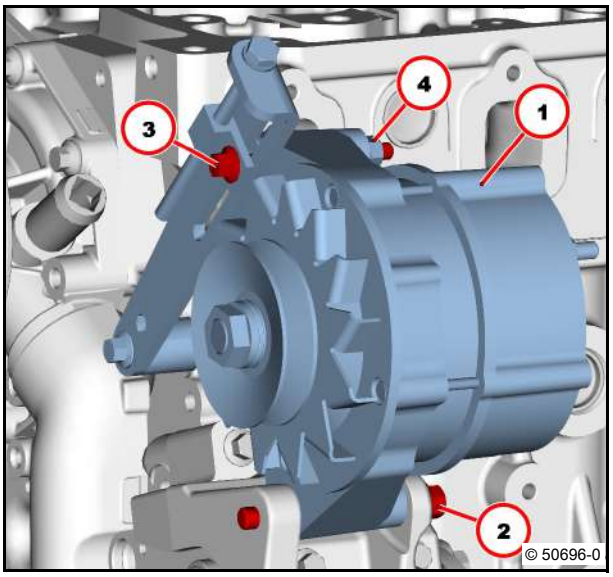

- Mount V-belt.
- Tighten V-belt (1) by turning the clamping screw (2).
- Check V-belt tension.

  Operation manual

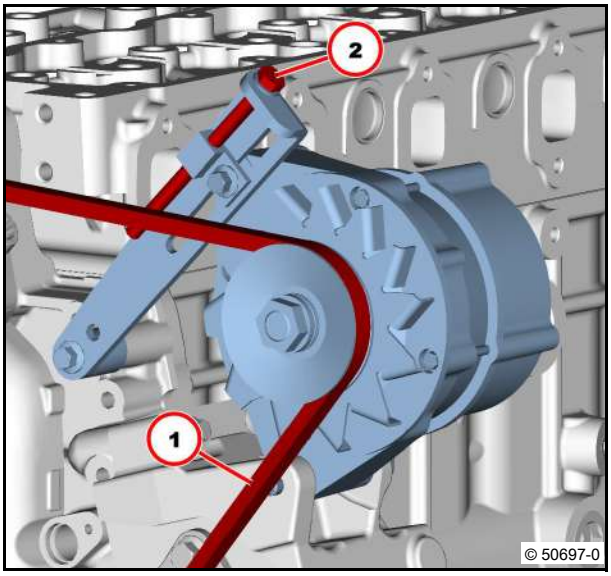

- Hold screw (2).
- Tighten nut (1).

  30 Nm
- Tighten screw (3).

  42 Nm
- Tighten screw (4).

  30 Nm

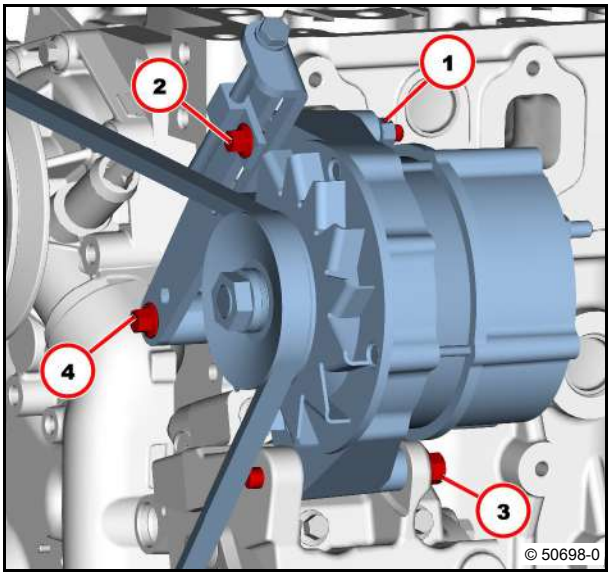

- Plug in the cable plug (1).
- Fit plus cable.
- Connect the battery's negative terminal.

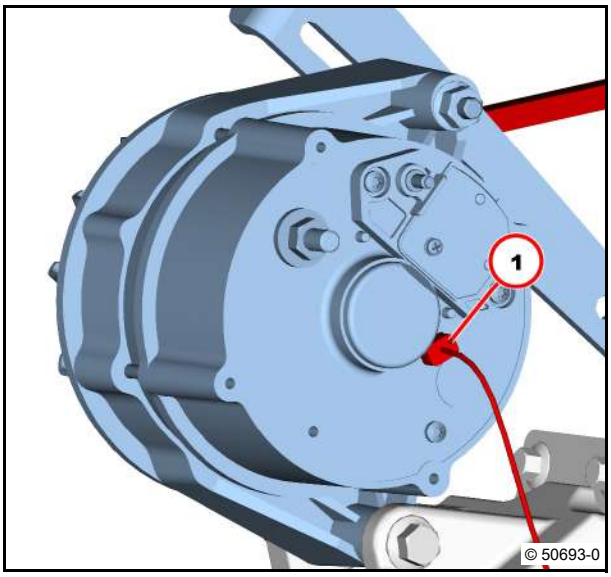

Technical Data

Tightening specifications

ID no.	Name	Screw type	Notes / Remark	Value
A44 012	Generator on console			42 Nm
A44 015	Generator at clamping latch			30 Nm
A44 017	Clamping latch on gear case			30 Nm

For the tightening procedure according to torque using a torque wrench, a maximum variation of the tightening torque of +/- 10% is permissible.

Removing and installing the generator (Fastening parts)

Standard tools

Removing the generator

1 Hexagon head screw
2 Hexagon head screw

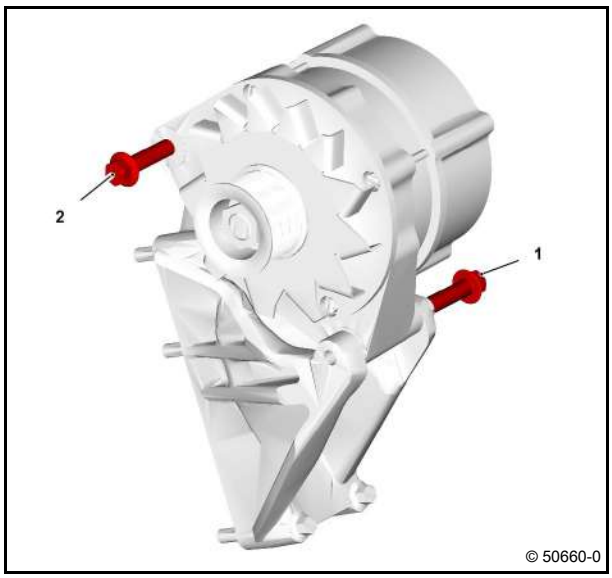

- Remove V-rib belt.

  Operation manual
- Disconnect the battery's negative terminal.
- Remove plus cable.
- Unlock cable plug (1) and disconnect.

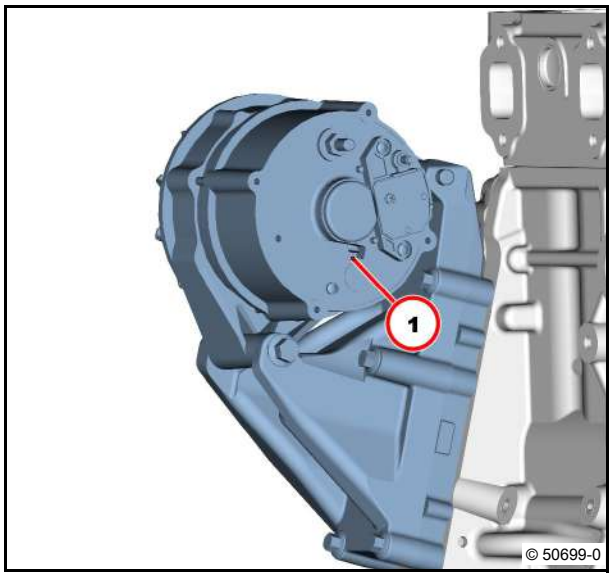

- Unscrew screws (1).
- Remove generator (2).
- Visually inspect the components.

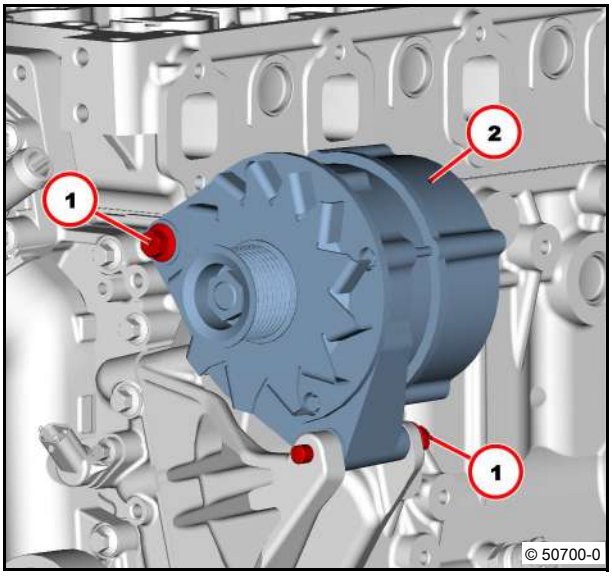

Installing the generator

- Mount generator (1).
- Tighten screws (2).

42 Nm

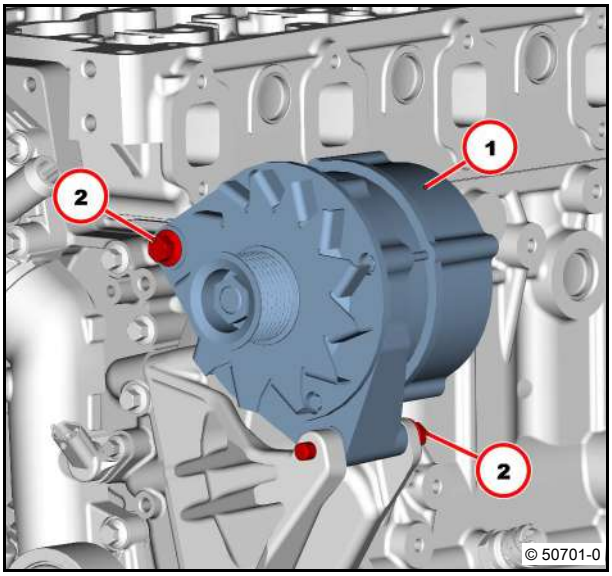

- Mount cable plug (1) and lock.
- Fit plus cable.
- Connect the battery's negative terminal.
- Position V-rib belt.

Operation manual

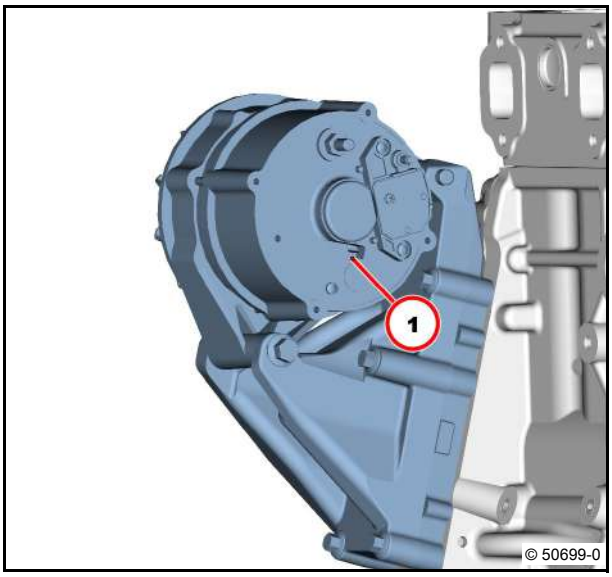

Technical Data

Tightening specifications

ID no.	Name	Screw type	Notes / Remark	Value
A44 012	Generator on console			42 Nm

For the tightening procedure according to torque using a torque wrench, a maximum variation of the tightening torque of +/- 10% is permissible.

Removing and installing the console (V-rib belt, level 1)

Standard tools

– Packing compound DEUTZ DW 73

– Operation manual

Removing the console

1 Console
2 Clamping pin
3 Hexagon head screw
4 Clamping sleeve
5 Hexagon head screw
244 Packing compound

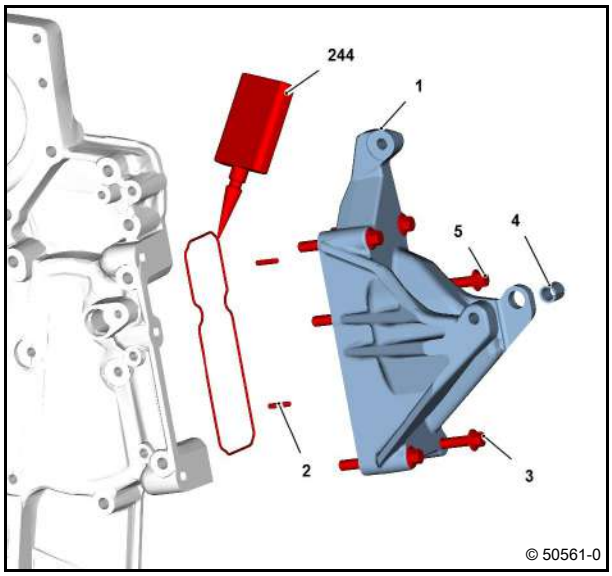

- Remove V-rib belt.

  Operation manual

- Remove generator (level 1).

  Module 44

- Unscrew screws (1).
- Remove console (2).
- Visually inspect the components.

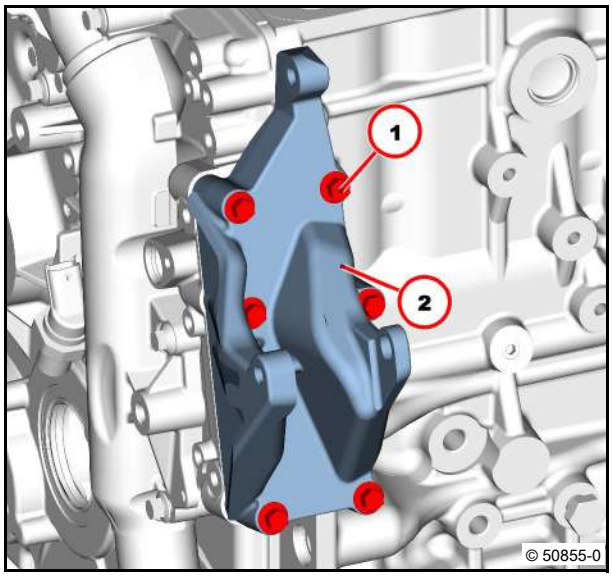

Mounting the console

- Clean sealing surfaces.

Make sure the clamping pin (arrow) is in place.

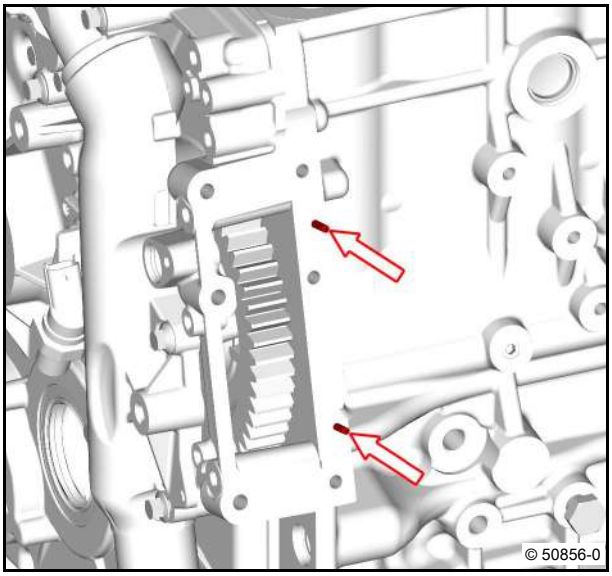

- Clean sealing surfaces.
- Apply sealing compound (1) evenly on the sealing surface.

Sealing cord strength approx. 3 mm

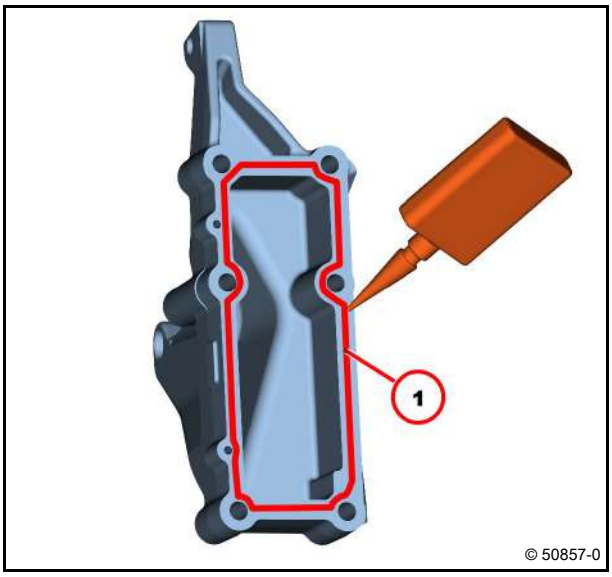

- Mount console (1) over the clamping pins.
- Fasten screw (2).
  M8x85-10.9
- Fasten screws (3).
  M8x60-10.9

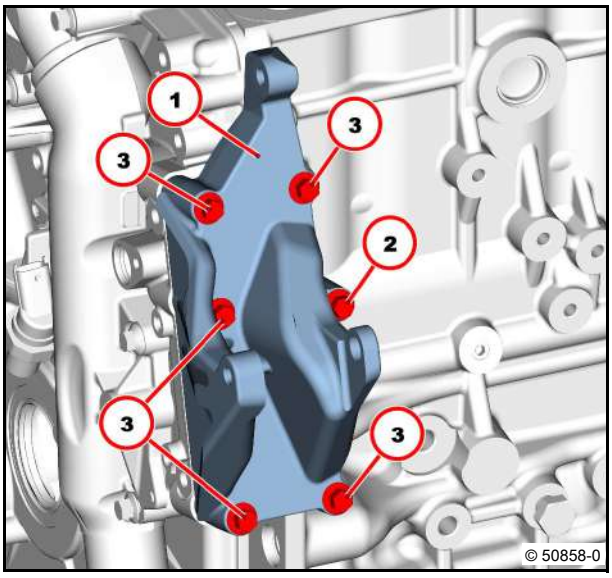

- Tighten all screws according to the tightening sequence.

  30 Nm

- Mount generator (level 1).

  Module 44

- Fit the V-rib belt according to the running direction.

  Operation manual

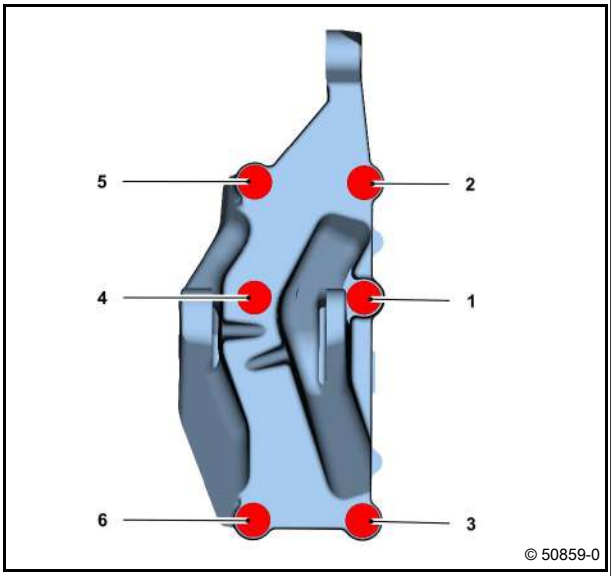

Technical Data

Tightening specifications

ID no.	Name	Screw type	Notes / Remark	Value
A44 013	Console on crankcase/gear case			30 Nm

For the tightening procedure according to torque using a torque wrench, a maximum variation of the tightening torque of +/- 10% is permissible.

Removing and installing the starter

Standard tools

– Safety information / User information

Removing the starter

1 Starter
2 Hexagon head screw

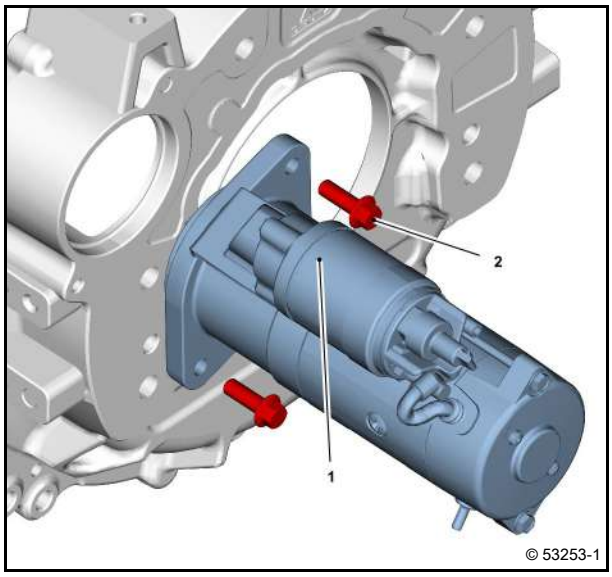

- Disconnect the battery's negative terminal.
- Remove plus cable.
- Pull out cable plug (1).

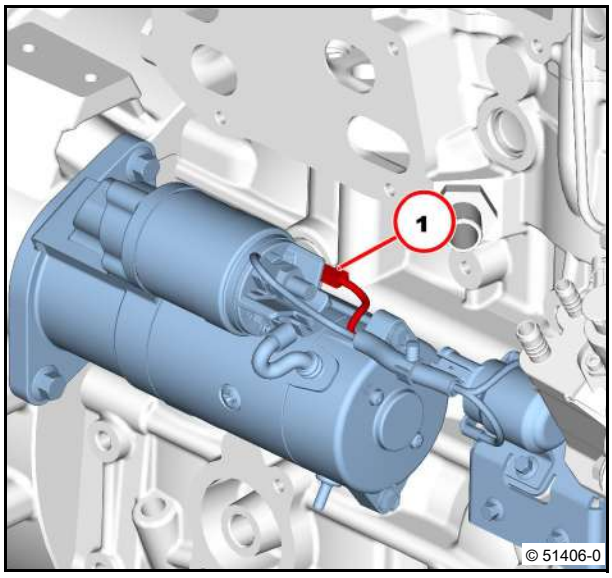

- Unscrew screws (1).
- Remove starter (2).
- Visually inspect the components.

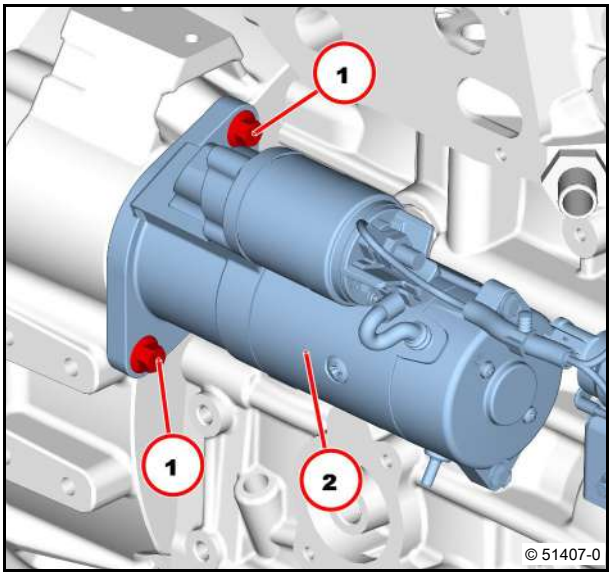

Installing the starter

- Insert starter (1).
- Tighten screws (2).

60 Nm

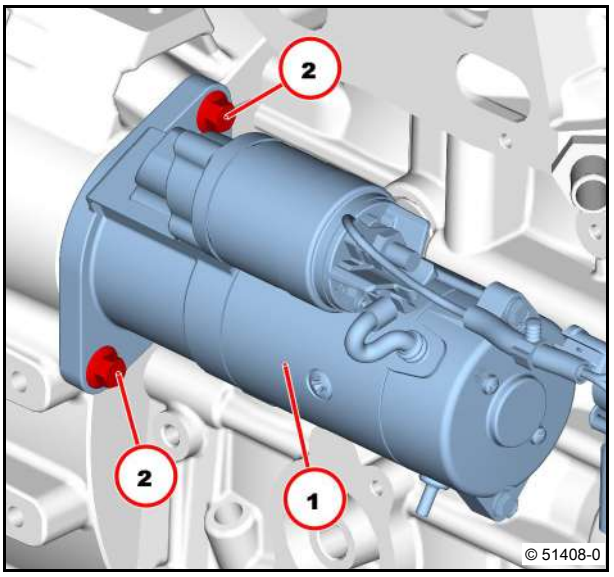

Attention!
Lay the cables free from chafing and tension.

- Plug in the cable plug (1).
- Fit plus cable.
- Connect the battery's negative terminal.

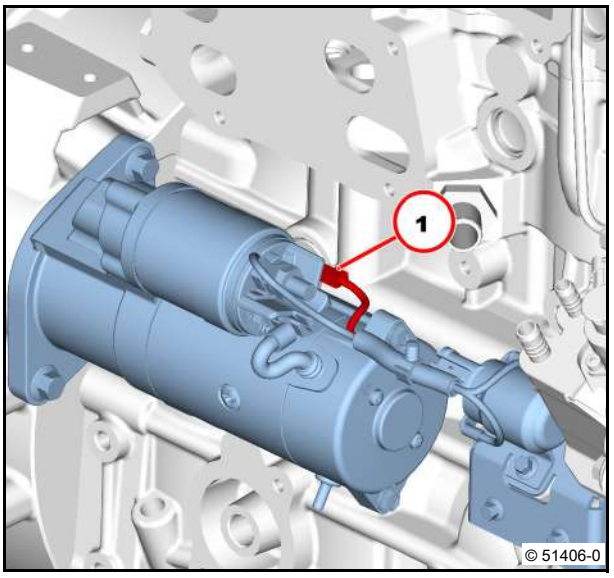

Technical Data

Tightening specifications

ID no.	Name	Screw type	Notes / Remark	Value
A44 001	Starter on connection housing			60 Nm

For the tightening procedure according to torque using a torque wrench, a maximum variation of the tightening torque of +/- 10% is permissible.

Generator

Standard tools

– Safety information / User information

1	Generator	
	Terminal B+	7.5 - 8 Nm
	Terminal L	2.7 - 3.8 Nm
2	Voltage regulator	4 Nm
3	Fan	
10	V-belt pulley	
11	Add-on parts	

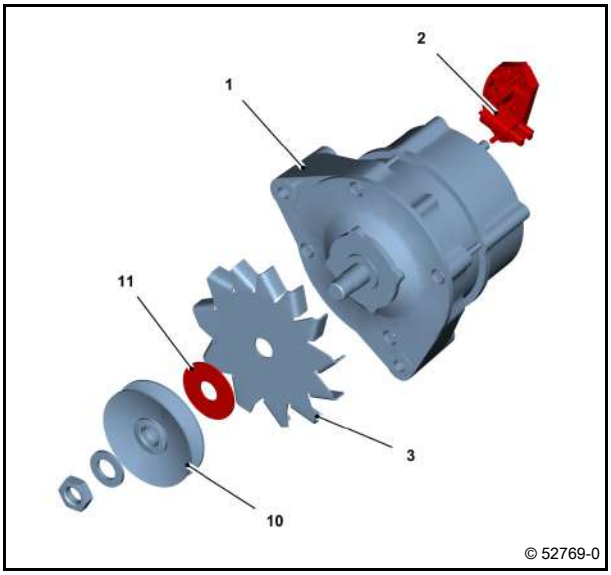

Position

11

Attention!

Observe tightening torque for V-rib belt pulley with clamping cone.

– Hexagonal nut

90 Nm

– Hexagonal nut in conjunction with clamping cone and V-rib belt pulley

75 Nm

Engine mounting

Standard tools

1	Holder	
2	Hexagon head screw	260 Nm
3	Stand foot	
4	Hexagon head screw	200 Nm
5	Hexagonal nut	
6	Washer	
7	Washer	

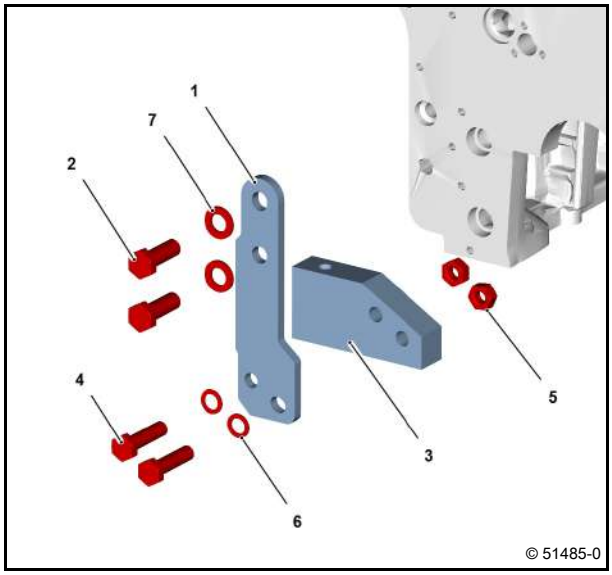

Engine mounting

Standard tools

1 Stand foot
2 Hexagon head screw 200 Nm
3 Washer

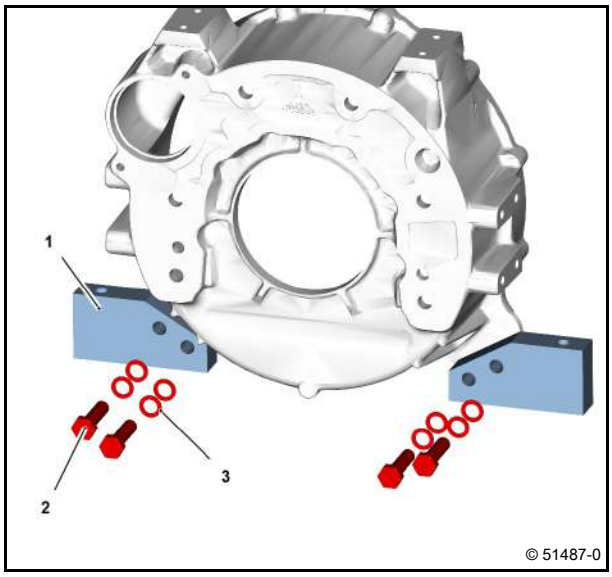

Engine mounting

Standard tools

1 Stand foot
2 Hexagon head screw 200 Nm
3 Washer
4 Mount buffer
5 Bushing

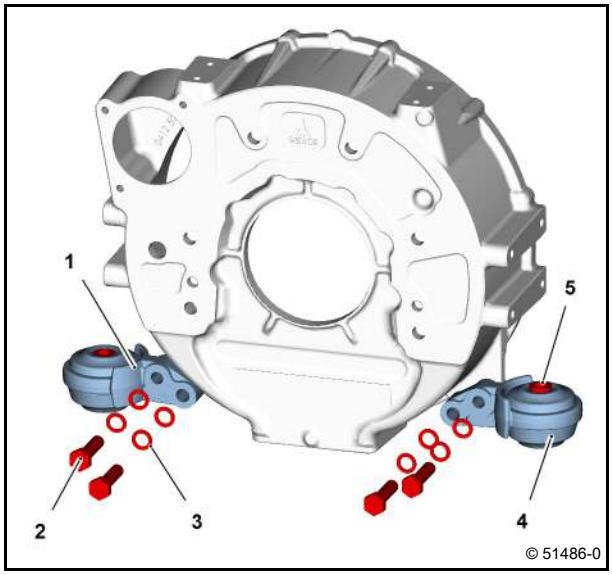

Engine mounting

Standard tools

– Safety information / User information

1	Holder	
2	Hexagon head screw	260 Nm
3	Stand foot	
4	Hexagon head screw	200 Nm
5	Hexagonal nut	
6	Washer	
7	Washer	

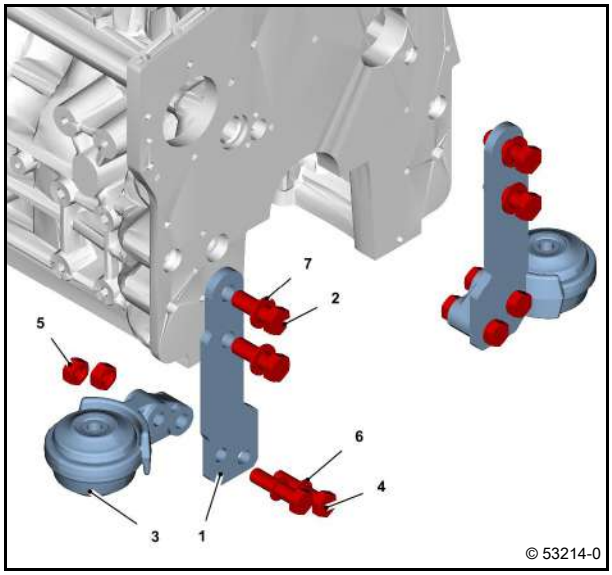

Removing and installing the pressure/temperature sensor (charge air)

Standard tools

Special tools:
– Disassembly tool 02992127

– Fitting compound DEUTZ AP1908

– Safety information / User information

Remove pressure/temperature sensor

1 Pressure/Temperature sensor
2 Hexagon head screw
3 O-ring
242 Mounting compound

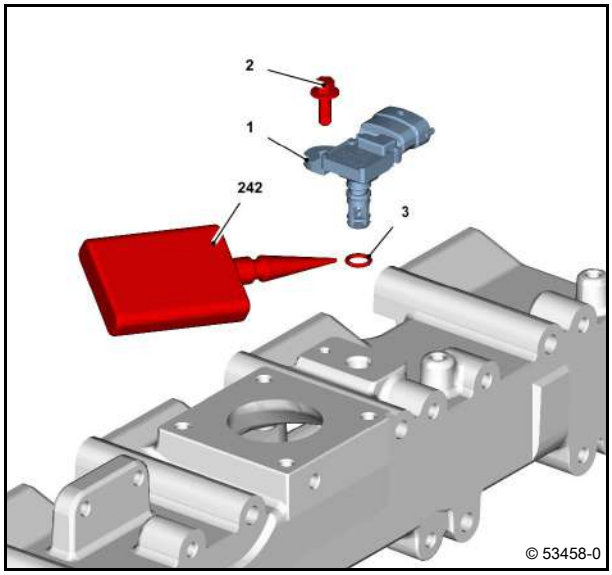

Remove pressure/temperature sensor

- Unlock cable plug.
- Pull out cable plug.
- Unscrew screw (1).
- Remove pressure/temperature sensor (2).

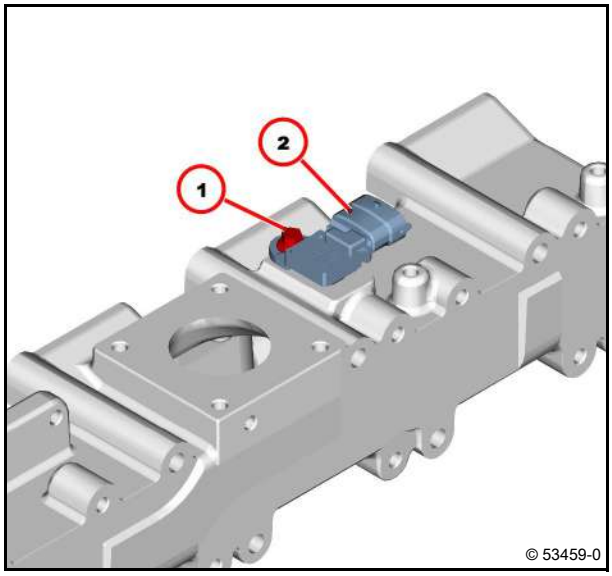

- Remove the O-ring (1) with the disassembly tool.
- Visually inspect the component.

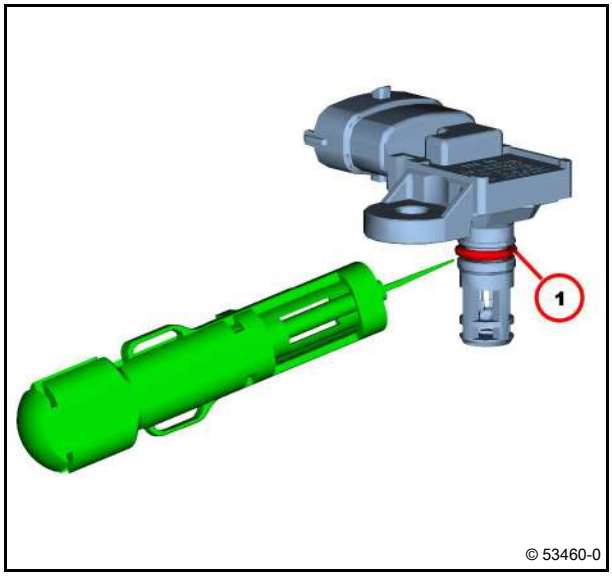

Installing the pressure/temperature sensor

- Insert new O-ring (1).
- Lightly coat O-ring with fitting compound.

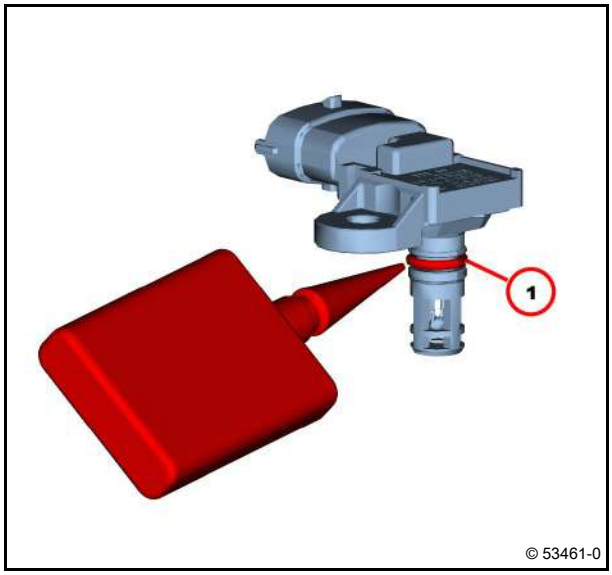

- Insert pressure/temperature sensor.

Ensure that the installation location is free from faults.

- Tighten screw (1).

11 Nm

- Plug on cable plug.

Ensure that the connection is perfect.

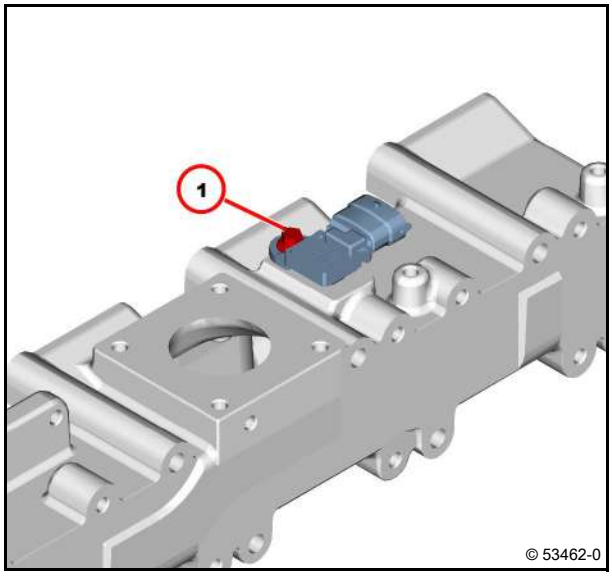

Technical Data

Tightening specifications

ID no.	Name	Screw type	Notes / Remark	Value
A48 046	Pressure/temperature sensor on charge air line		Use new round sealing ring	11 Nm

For the tightening procedure according to torque using a torque wrench, a maximum variation of the tightening torque of +/- 10% is permissible.

Fastening parts

Standard tools

– Safety information / User information

1 Hexagon head screw 20 Nm
2 Holding tape

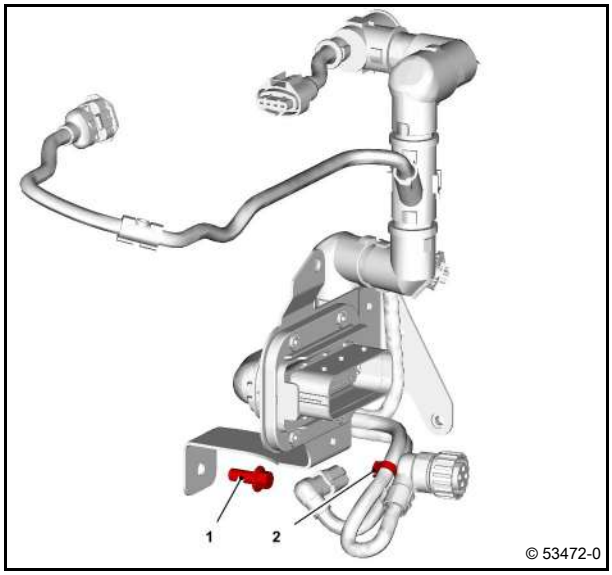

Holder
(Relay)

Standard tools

1 Holding plate
2 Hexagon head screw 13 Nm
3 Relay

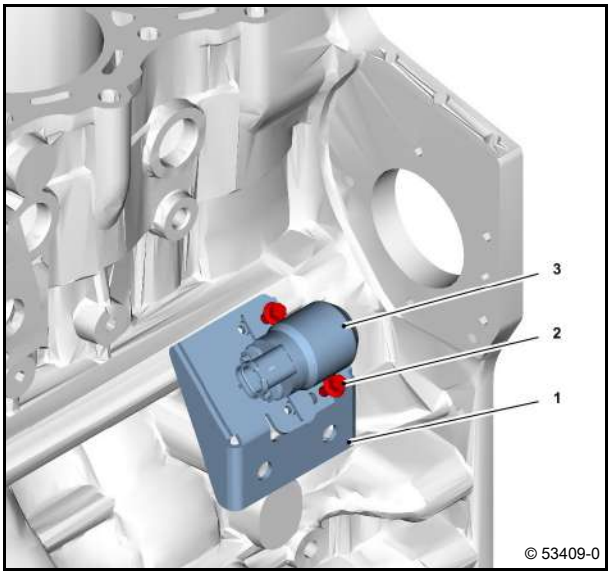

Removing and installing turning gear / locking device

Standard tools

Special tools:
– Turning gear / locking device 02992380

– Safety information / User information

Installing turning gear / locking device

- Remove starter.

  Module 44

- Insert turning gear / locking device (1).

Toothed wheel of the turning gear / locking device in the toothed starter ring.

- Tighten screws (2).

30 Nm

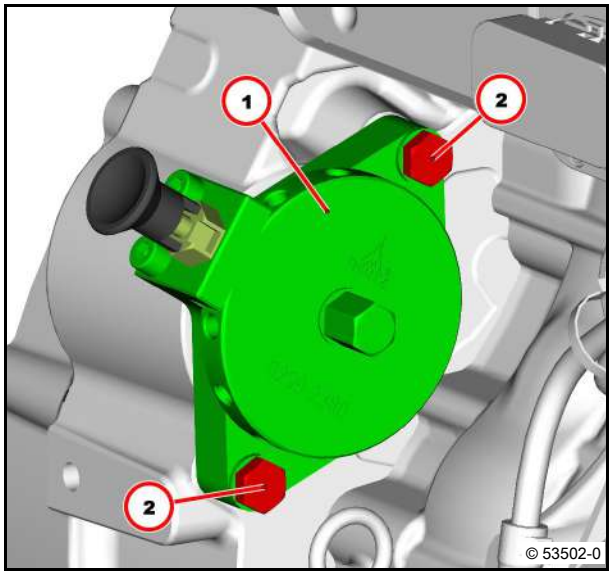

Rotating the engine

- Pull out and turn detent pin (1).

Observe position of the latches (2).

- Turn drive (3) carefully up to the desired crankshaft position.

Observe engine direction of rotation.

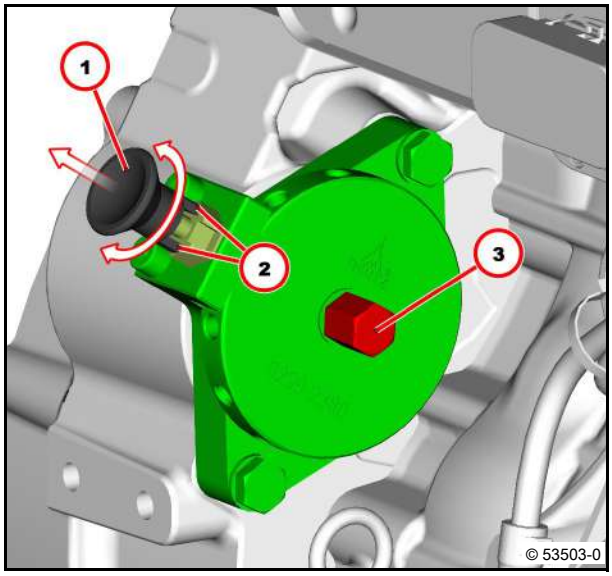

Locking the engine

- Pull out and turn detent pin (1).

Observe position of the latches (2).

- Turn drive (3) carefully until the detent pin latches into place.

Observe engine direction of rotation.

Attention!
Detent pin must latch easily into place.
The crankshaft is locked and can no longer be turned.

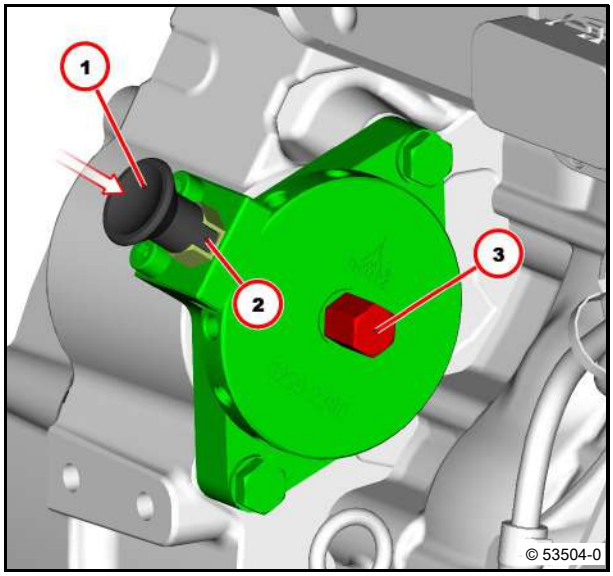

Removing turning gear / locking device

- Unscrew screws (1).
- Remove turning gear / locking device (2).
- Install starter.

Module 44

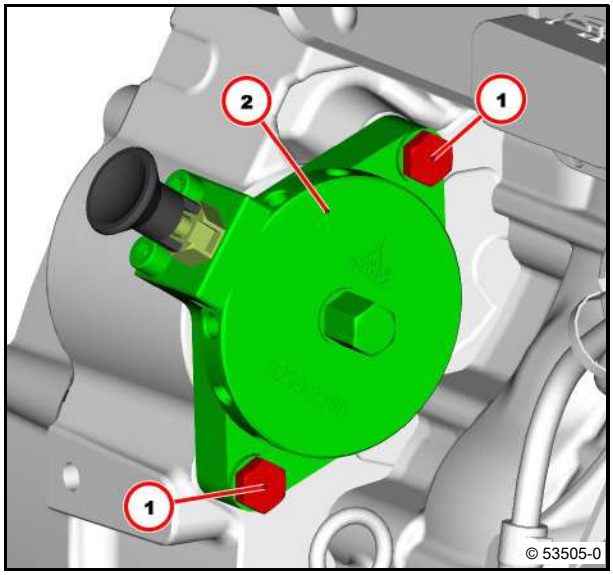

Technical Data

Tightening specifications

ID no.	Name	Screw type	Notes / Remark	Value
A49 050	Turning gear / locking device, fastening			30 Nm

For the tightening procedure according to torque using a torque wrench, a maximum variation of the tightening torque of +/- 10% is permissible.

Impulse transmitter (crankshaft)

Standard tools

Special tools:
– Disassembly tool 02992127

– Safety information / User information

1 Holder
2 Impulse transmitter
3 Hexagon head screw 8.5 Nm
4 Hexagon head screw 5 Nm
5 O-ring

- Remove the O-ring with the disassembly tool.
- Insert new O-ring.

Attention!
Ensure that the installation location is free from faults.

Position
1
Position fixing using two clamping pins in the gear case.

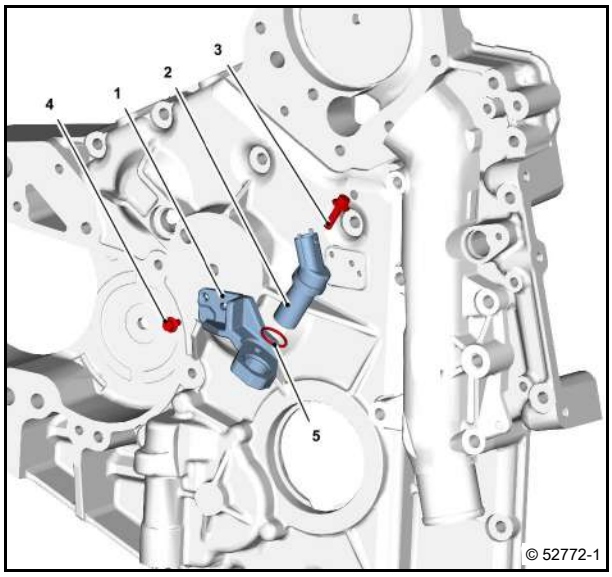

Impulse transmitter (camshaft)

Standard tools

– Safety information / User information

1 Impulse transmitter
2 Hexagon head screw 8.5 Nm
3 O-ring

- Clean sealing surfaces.

Use new round sealing ring.

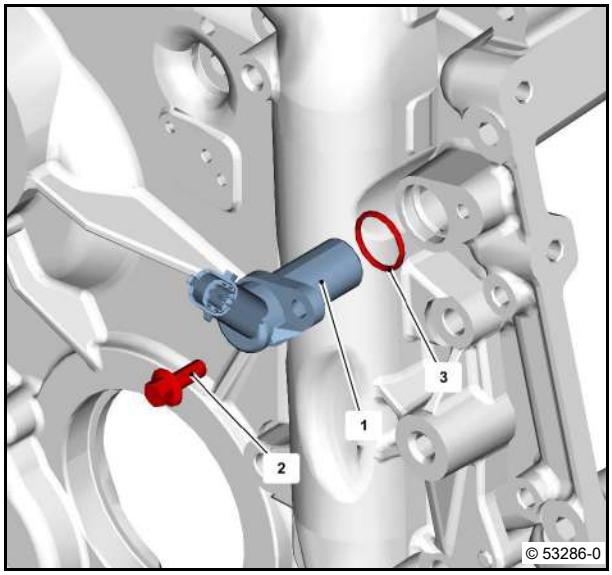

Pressure transmitter installation (oil pressure)

Standard tools:
– Long socket wrench insert 01899132

– Safety information / User information

1 Pressure sensor 25 Nm
2 O-ring

Use new round sealing ring.

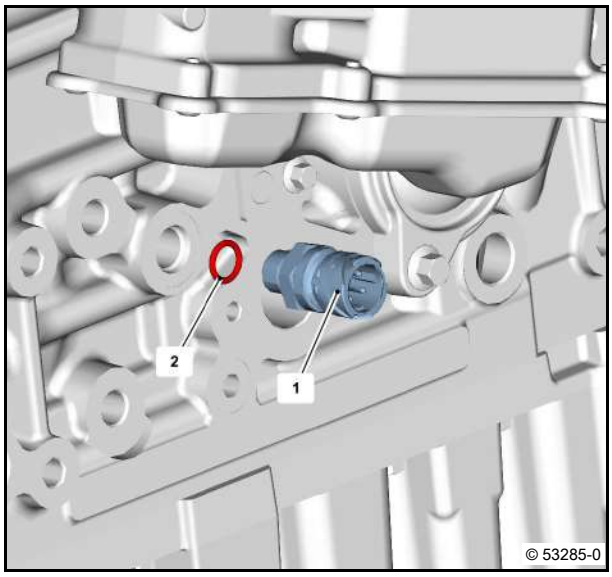

Removing and installing the connection housing

Standard tools

– Safety information / User information

Removing the connection housing

1 Connection housing
2 Hexagon head screw
3 Bushing

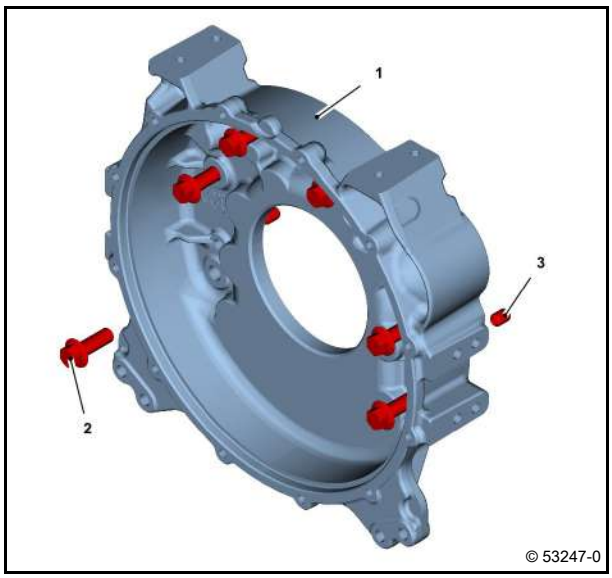

- Remove flywheel.
  Module 05
- Unscrew screws (1).
- Remove connection housing (2).
- Visually inspect the component.

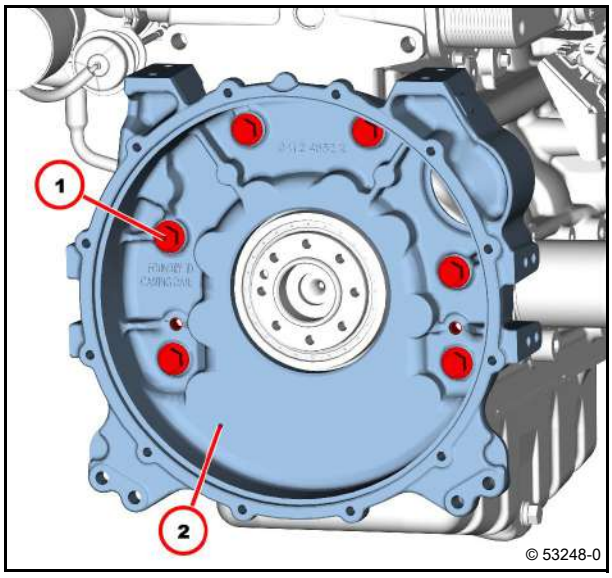

Installing the connection housing

- Clean contact surfaces.

Make sure the clamping bushings (1) are in place.

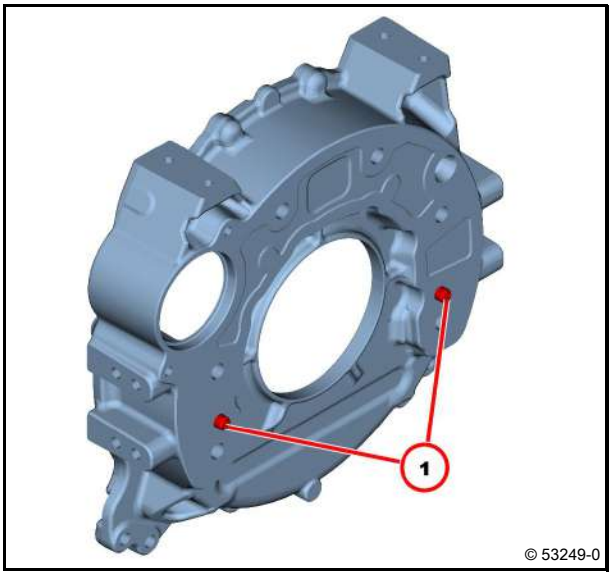

- Position connection housing (1).
- Centre connection housing over the clamping bushings.

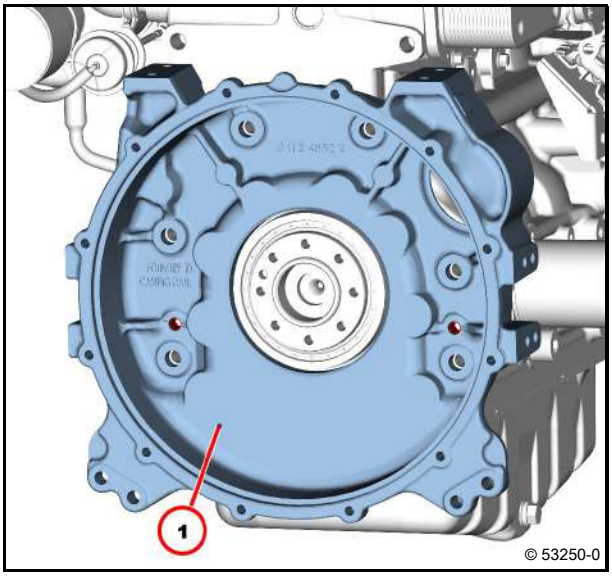

- Tighten screws (1).
- Tighten all screws (1) alternately.

170 Nm

- Install flywheel.

Module 05

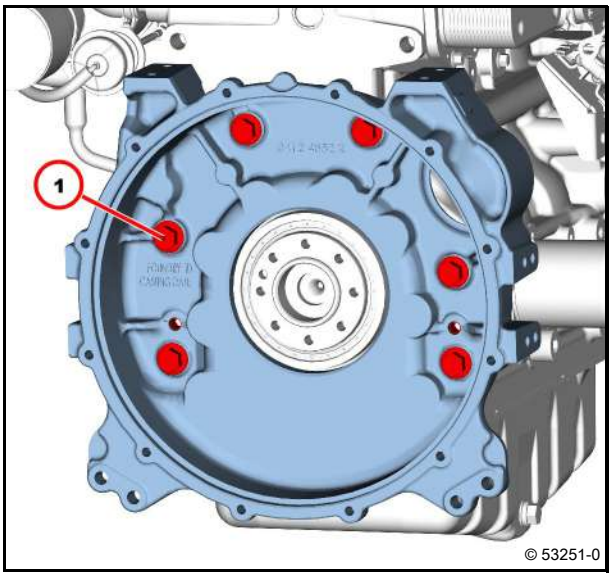

Technical Data

Tightening specifications

ID no.	Name	Screw type	Notes / Remark	Value
A52 080	Connection housing on crankcase		Tighten diagonally opposed	170 Nm

For the tightening procedure according to torque using a torque wrench, a maximum variation of the tightening torque of +/- 10% is permissible.

Removing and installing the connection housing

Standard tools

– Safety information / User information

Removing the connection housing

1 Connection housing
2 Hexagon head screw 8.5 Nm
3 Cover plate
4 Hexagon head screw
5 Bushing

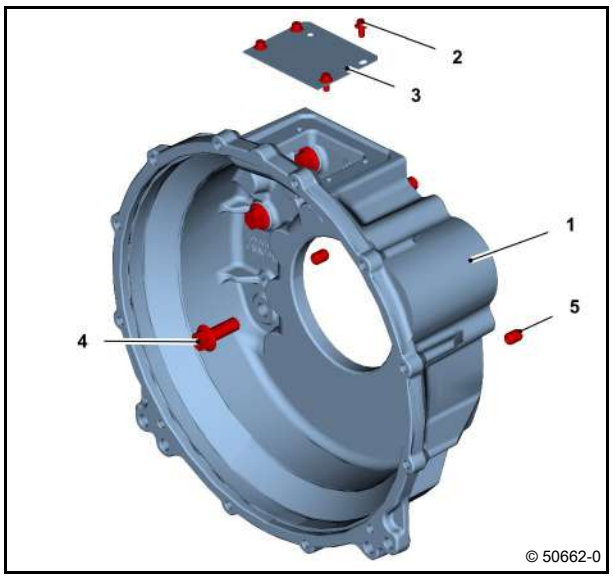

- Remove flywheel.
  Module 05
- Unscrew screws (1).
- Remove connection housing (2).
- Visually inspect the component.

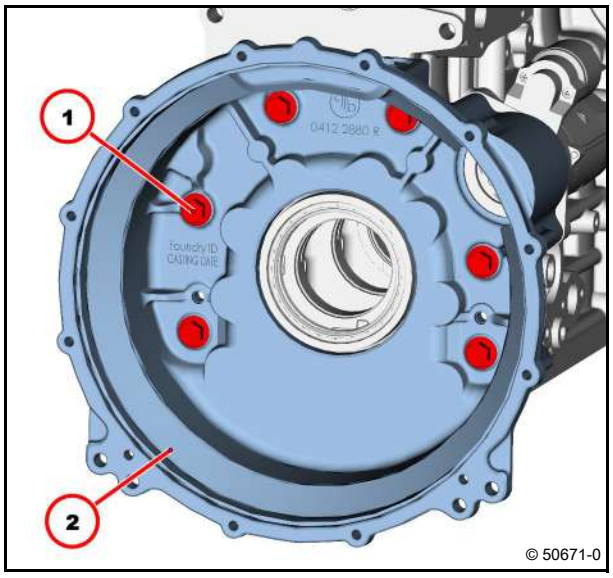

Installing the connection housing

- Clean contact surfaces.

Make sure the clamping bushings (1) are in place.

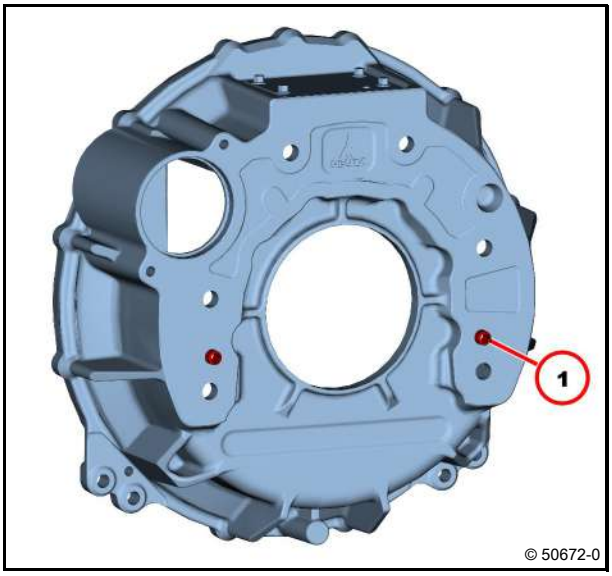

- Position connection housing (1).
- Centre connection housing over the clamping bushings.

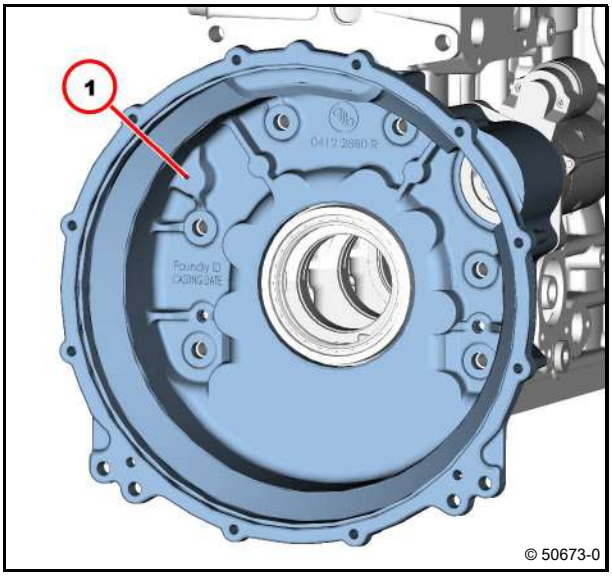

- Tighten screws (1).
- Tighten all screws (1) alternately.

170 Nm

- Install flywheel.

Module 05

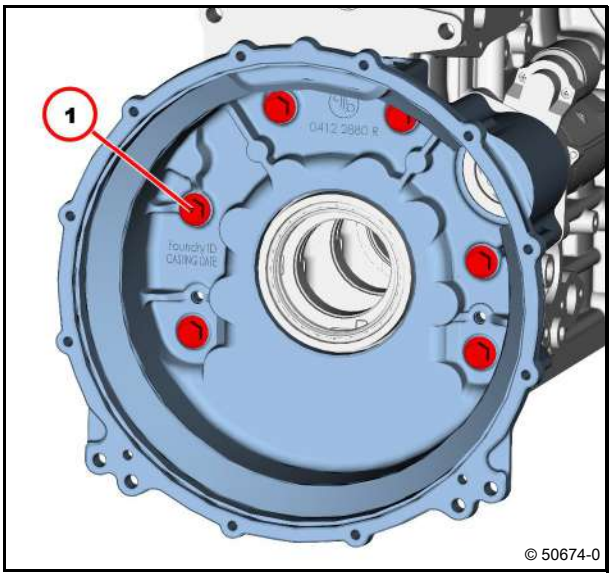

Technical Data

Tightening specifications

ID no.	Name	Screw type	Notes / Remark	Value
A52 080	Connection housing on crankcase		Tighten diagonally opposed	170 Nm

For the tightening procedure according to torque using a torque wrench, a maximum variation of the tightening torque of +/- 10% is permissible.

Connection housing

Standard tools

1	Connection housing	
2	Hexagon head screw	8.5 Nm
3	Cover plate	
4	Screw plug	80 Nm
5	Sealing ring	

Use a new sealing ring.

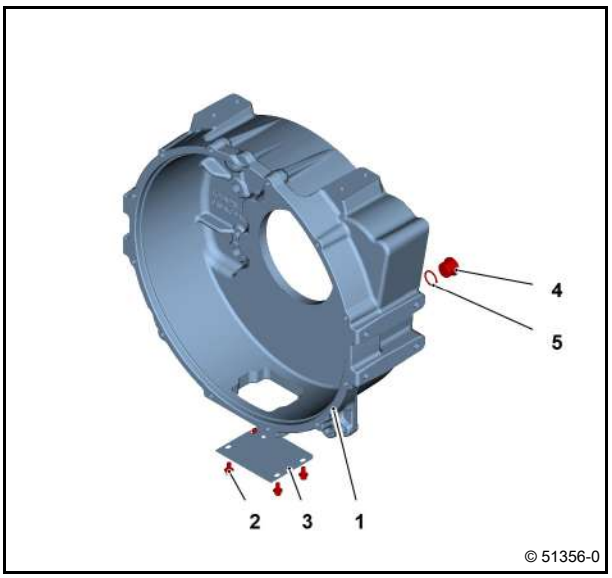

Removing and installing the glow plugs

Standard tools:
– Crowfoot wrench size 10

– Safety information / User information

Removing the glow plugs

1 Glow plug
2 Connecting rail

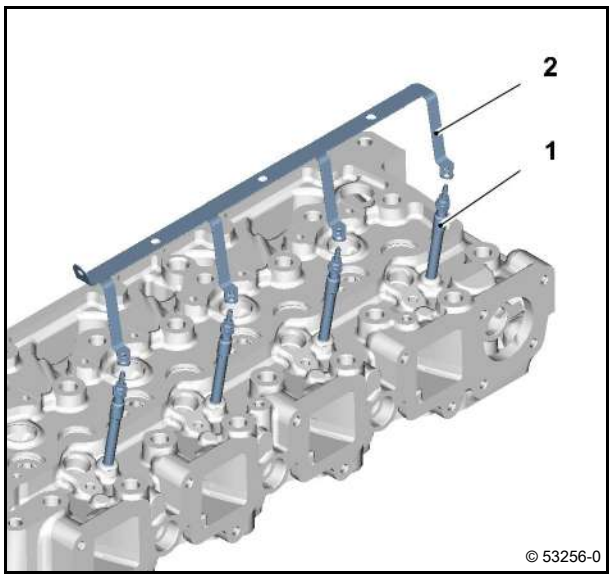

- Disconnect the battery.
- Unscrew nuts (1).
- Remove connecting rail (2).

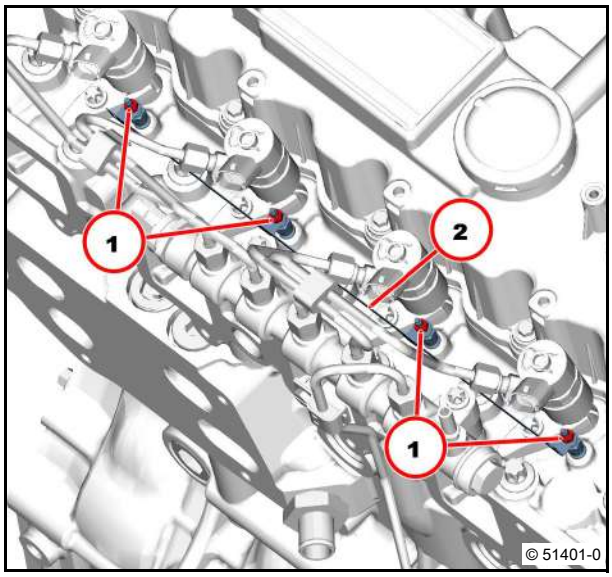

- Unscrew glow plugs (1).
- Visually inspect the components.

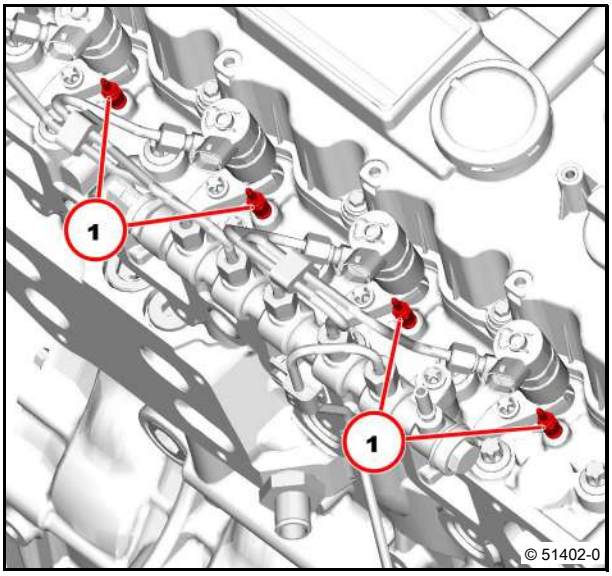

Installing the glow plugs

- Screw in glow plugs (1).

Attention!
Ensure that the installation location is free from faults.

- Tighten glow plugs (1).

13.5 Nm

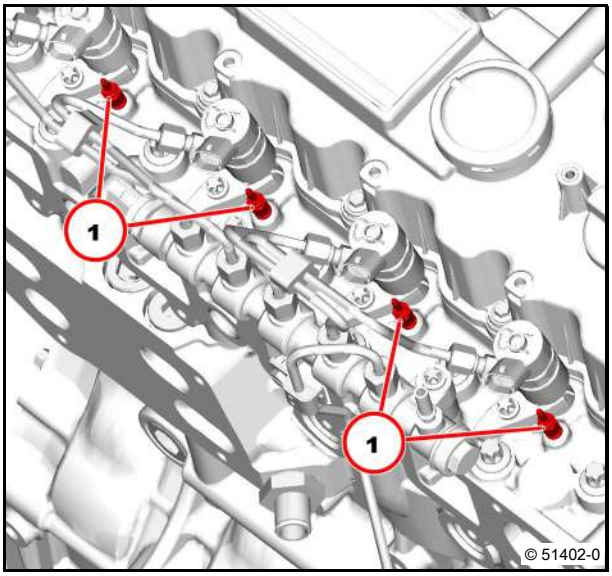

- Mount connecting rail (1).
- Turn on nuts (2).

Attention!
Ensure that the connection is perfect.

- Tighten nuts (2).

2.5 Nm

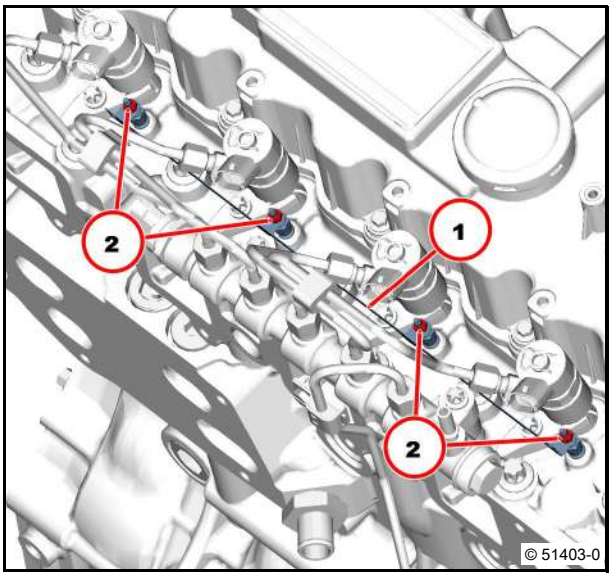

Technical Data

Tightening specifications

ID no.	Name	Screw type	Notes / Remark	Value
A63 032	Glow plug on cylinder head			13.5 Nm
A63 033	Connecting rail on glow plug			2.5 Nm

For the tightening procedure according to torque using a torque wrench, a maximum variation of the tightening torque of +/- 10% is permissible.

Holder

Standard tools

– Safety information / User information

Danger!

Hot components!
Danger of burns / explosion!
Let the engine / components cool down sufficiently (to at least ambient temperature).

Attention!

Note installation position.
The installation situation is application and equipment-dependent.
The documentation of the vehicle manufacturer/equipment manufacturer must be observed for disassembly and installation.
Make sure that the inlet module, outlet module, particle filter, V-belt clips and fastening points are reassembled in the same installation position.
Do not scratch or damage surfaces.
Externally damaged parts must be renewed.
All the help markings must be transferred when renewing/changing a part.
V-belt clips must be replaced each time they are loosened.
The gaskets must be disposed of properly and always renewed.

1	Holder	9 Nm
1	Hexagon head screw	20 Nm

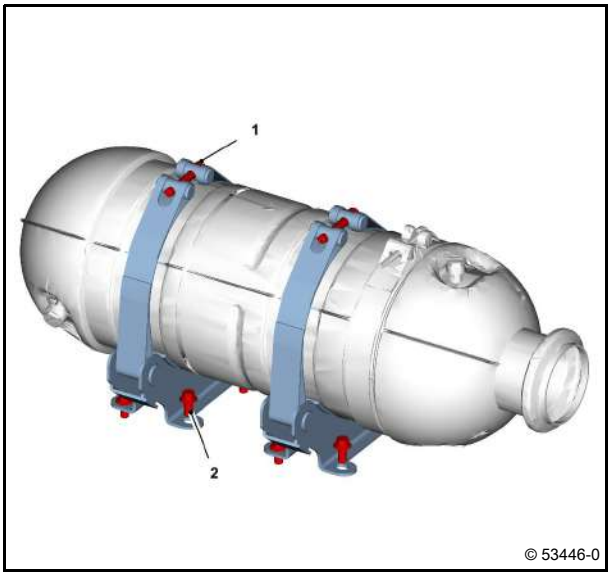

Compensator structure (assembly material)

Standard tools

– Safety information / User information

Danger!

Hot components!
Danger of burns / explosion!
Let the engine / components cool down sufficiently (to at least ambient temperature).

Attention!

Note installation position.
The installation situation is application and equipment-dependent.
The documentation of the vehicle manufacturer/equipment manufacturer must be observed for disassembly and installation.
Externally damaged parts must be renewed.
V-belt clips must be replaced each time they are loosened.
The gaskets must be disposed of properly and always renewed.

1 Clip 12 Nm
2 Seal

Use new gaskets.
Use new V-belt clips.

Attention!

Ensure that the installation location is free from faults.
Check seal.

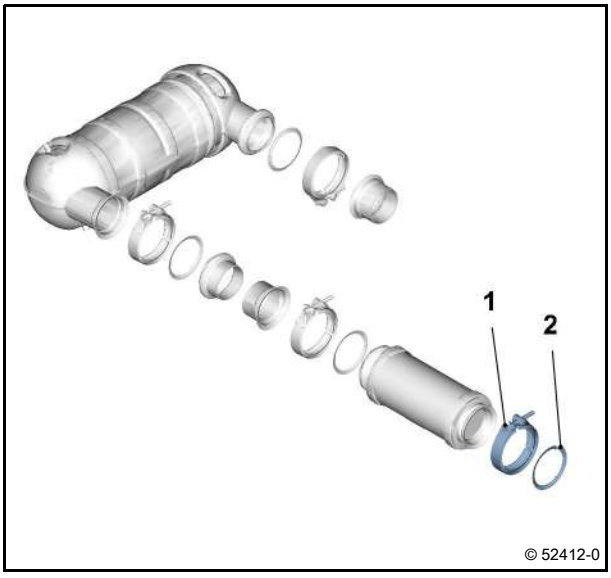

Inlet module

Standard tools:
- Industrial vacuum cleaner
- Lifting gear
- Carrying straps

- Fitting compound DEUTZ S1
- Cleaning fleece
- Marker pen, waterproof, permanent

- Safety information / User information

Danger!

Hot components!
Danger of burns!
Let the engine / components cool down sufficiently (to at least ambient temperature).

Do not carry out work when the engine is running.

When using hoists (workshop crane) the safety regulations for handling hoists must be observed.
It is not permitted to stay under moving loads.

Place the components on a level and secure surface.

Secure the components against tipping over.

Wear a respirator with at least protection class FFP2, goggles and protective gloves as protection against fine dust and soot particles.

Extract soot from the end faces with an industrial vacuum cleaner.

Do not blow compressed air onto soot-covered areas.

Attention!

The installation situation is application and equipment-dependent.
Externally damaged parts must be renewed.
The documentation of the vehicle manufacturer/equipment manufacturer must be observed for disassembly and installation.
Dismantling and assembly should only be done in the vertical position.
All the help markings must be transferred when renewing/changing a part.
V-belt clips must be replaced each time they are loosened.
The gaskets must be disposed of properly and always renewed.

Use a new gasket.

1	Inlet module	
2	V-belt clip	10 Nm
3	Seal	
4	Cap	15 Nm

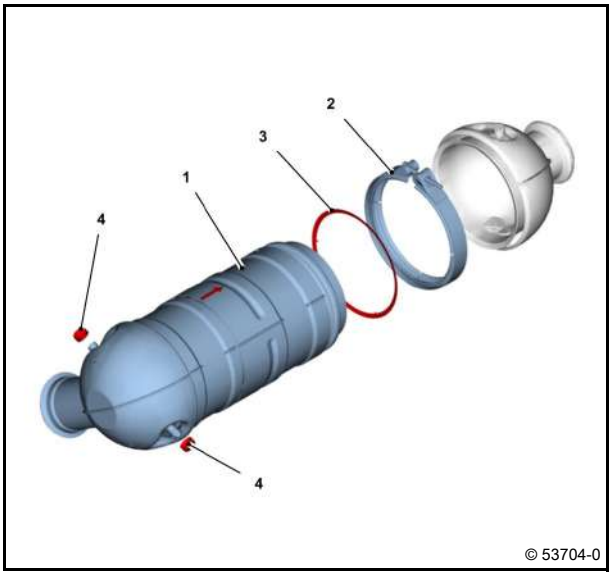

- Mark installation position.
- Apply help markings.

Attention!
Ensure that the installation location is free from faults.
Make sure that the inlet module, outlet module, particle filter, V-belt clips and fastening points are reassembled in the same installation position.
Do not scratch or damage surfaces.
All the help markings must be transferred when renewing/changing a part.
Note flow direction.
The arrow indicates the flow direction.

- Clean sealing surfaces.

Use a new gasket.

- Coat surfaces (arrows) with mounting compound.

Attention!
Make sure it is applied evenly and without gaps.
V-belt clip must be replaced each time it is loosened.

- Perform leak test.

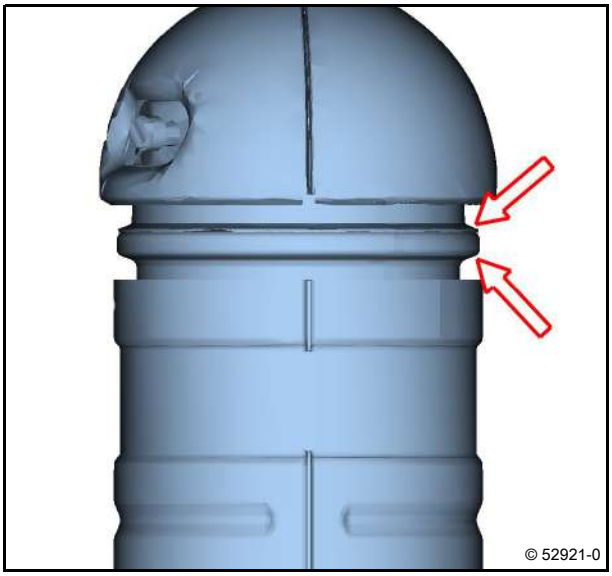

Outlet module

Standard tools:
- Industrial vacuum cleaner
- Lifting gear
- Carrying straps

- Fitting compound DEUTZ S1
- Cleaning fleece
- Marker pen, waterproof, permanent

- Safety information / User information

Danger!

Hot components!
Danger of burns!
Let the engine / components cool down sufficiently (to at least ambient temperature).

Do not carry out work when the engine is running.

When using hoists (workshop crane) the safety regulations for handling hoists must be observed.
It is not permitted to stay under moving loads.

Place the components on a level and secure surface.

Secure the components against tipping over.

Wear a respirator with at least protection class FFP2, goggles and protective gloves as protection against fine dust and soot particles.

Extract soot from the end faces with an industrial vacuum cleaner.

Do not blow compressed air onto soot-covered areas.

Attention!

The installation situation is application and equipment-dependent.
Externally damaged parts must be renewed.
The documentation of the vehicle manufacturer/equipment manufacturer must be observed for disassembly and installation.
Dismantling and assembly should only be done in the vertical position.
All the help markings must be transferred when renewing/changing a part.
V-belt clips must be replaced each time they are loosened.
The gaskets must be disposed of properly and always renewed.

Use a new gasket.

Use new sealing rings.

1 Outlet module

Use a new gasket.

Use new sealing rings.

Attention!
Disassemble and assemble according to the job card listed below.

W 71-90-48

Inlet module

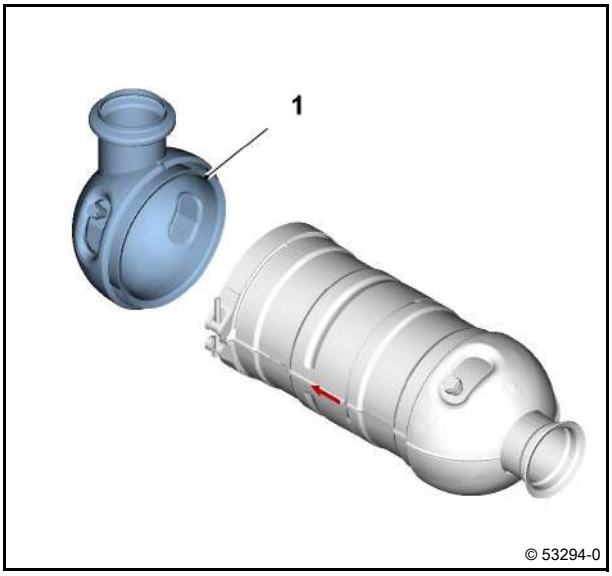

Console

Standard tools

– Safety information / User information

1 Console
2 Hexagon head screw 60 Nm

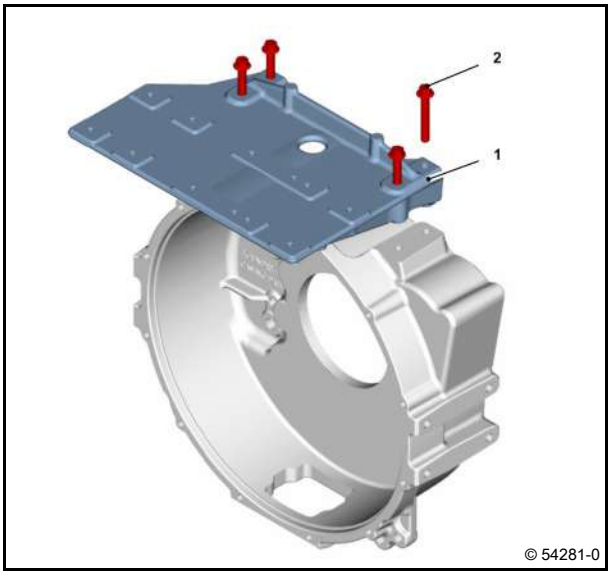

Removing and installing the coolant compressor

Standard tools

Special tools:
– Plugs/caps 01899144

– Safety information / User information
– Operation manual

Collect leaking operating substances in suitable vessels and dispose of according to regulations.

Emptying and filling the engine with operating media must be carried out according to the operating manual and the appropriate documentation of the vehicle/equipment manufacturer.

Removing the coolant compressor

1 Coolant compressor
2 Console
3 Bushing
4 Cylinder head screw
5 Hexagonal nut
6 Clamping strap
7 Hexagon head screw
8 Ball disc
9 Threaded piece
10 Washer
11 Torx screw
12 Torx screw

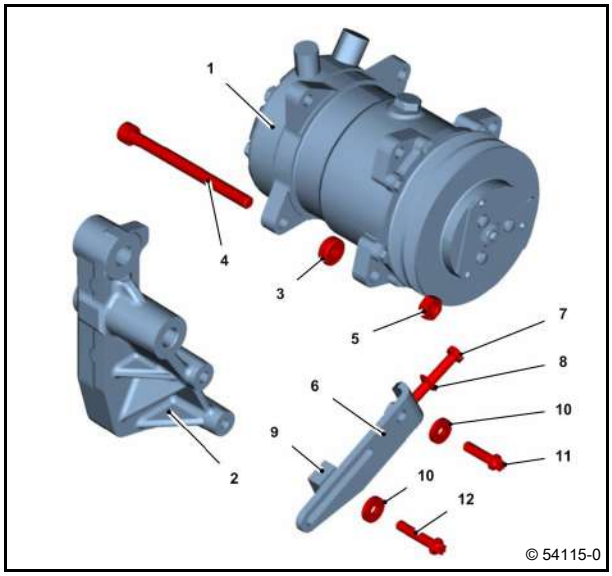

Attention!
Emptying and filling the air-conditioning system must be carried out according to the operating manual and the appropriate documentation/specifications of the vehicle/equipment manufacturer.

- Unscrew coolant lines.
- Attach locking caps.
- Hold screw.
- Loosen nut (1).
- Loosen screws (2).

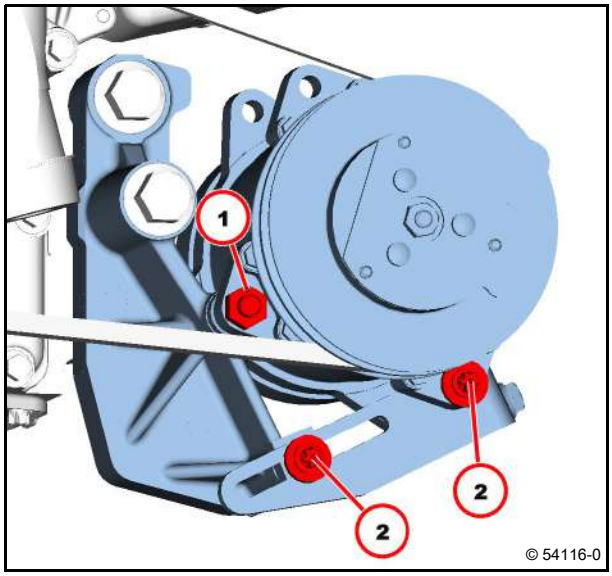

- Loosen screw (1).
- Swing the coolant compressor into the direction of the arrow.
- Remove V-belt (2).

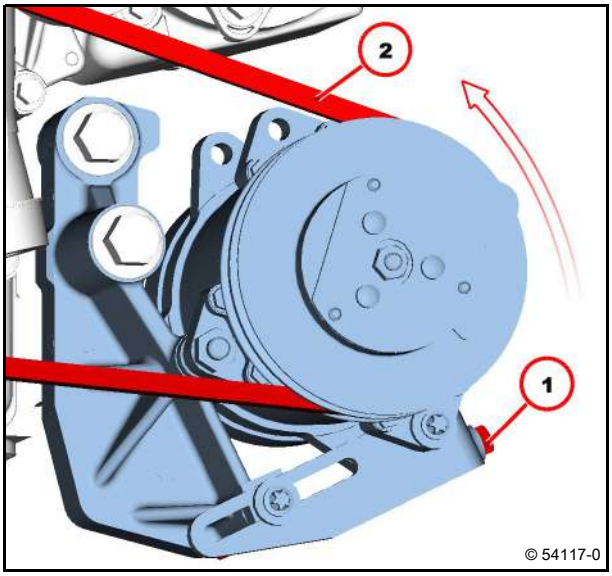

- Unscrew screws (1).
- Remove washers (2)
- Remove the clamping latch (3).

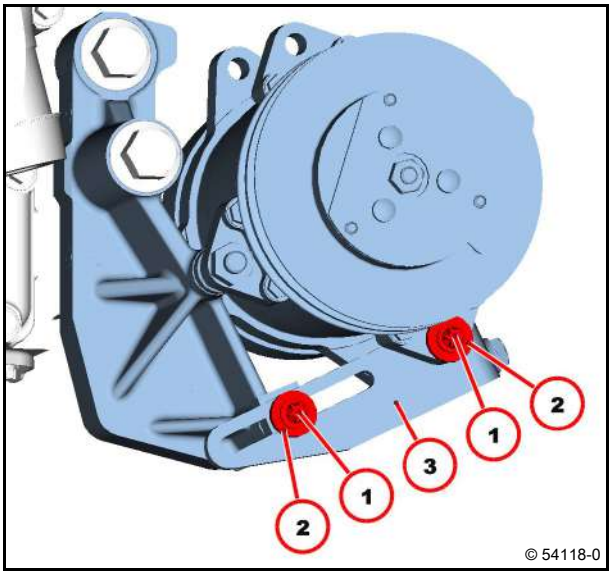

- Hold screw (2).
- Unscrew nut (1).
- Remove screw (2).
- Remove sleeve (3).
- Remove coolant compressor (4).

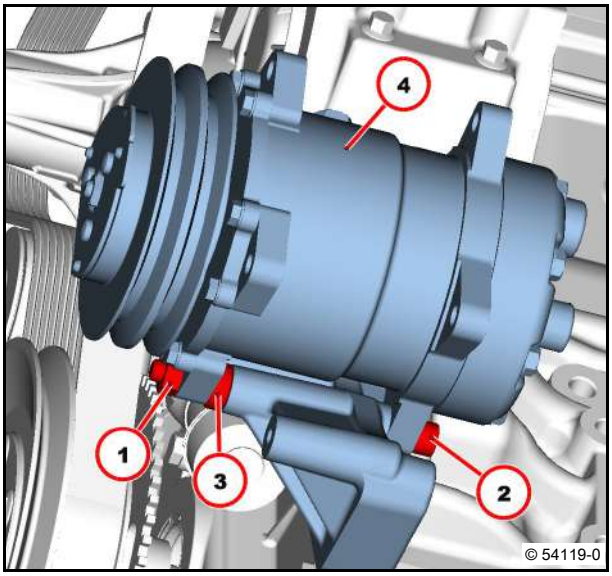

Mounting the coolant compressor

- Attach coolant compressor (1).
- Fit sleeve (2).
- Insert screw (3).
- Screw on nut (4).

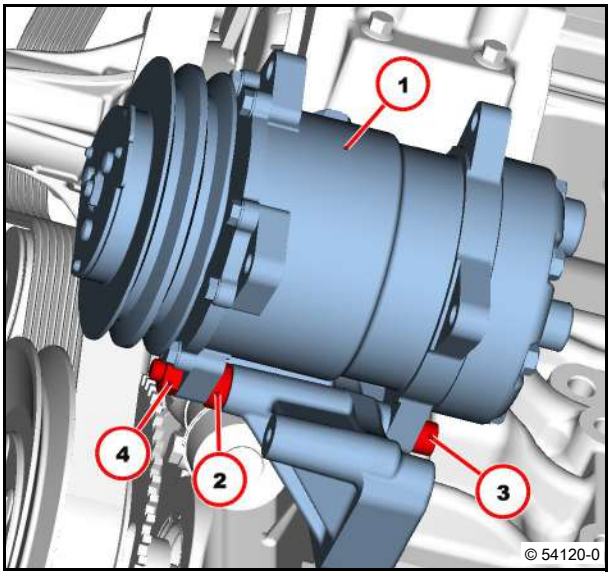

- Mount clamping latch (1).
- Mount washers (2).
- Fasten screws (3).

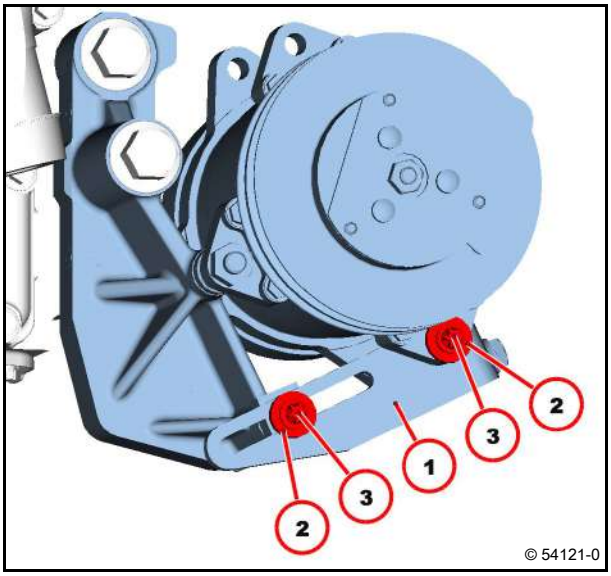

- Loosen screw (1).
- Swing the coolant compressor into the direction of the arrow.
- Mount V-belt.

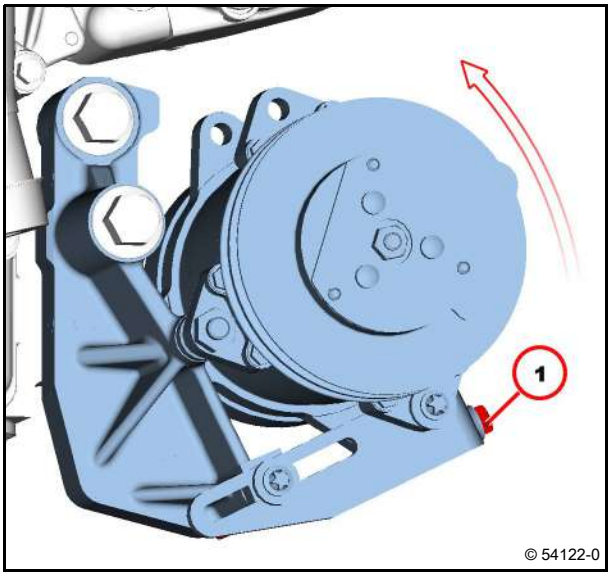

- Tighten V-belt (1) by turning the clamping screw (2).
- Check V-belt tension.

  Operation manual

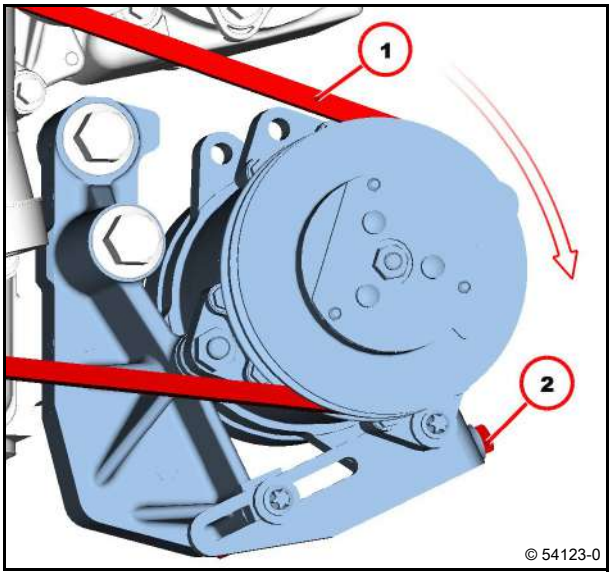

- Hold screw.
- Tighten nut (1).

  42 Nm
- Tighten screw (2).

  20 Nm
- Tighten screw (3).

  20 Nm
- Pull off locking caps.
- Screw on coolant lines.

Attention!
Emptying and filling the air-conditioning system must be carried out according to the operating manual and the appropriate documentation/specifications of the vehicle/equipment manufacturer.

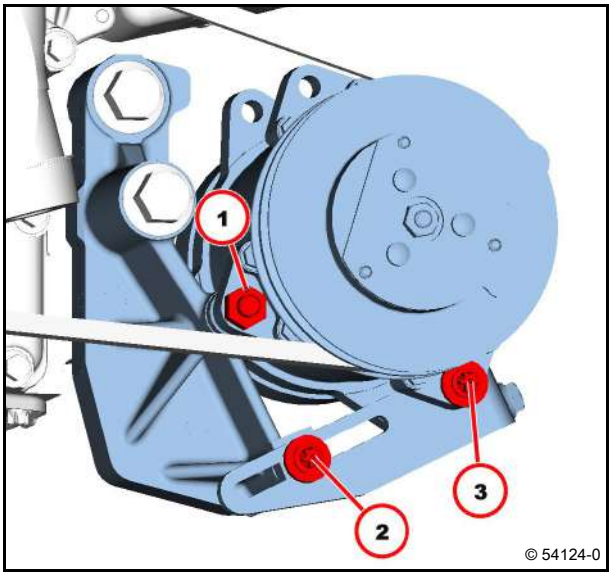

Technical Data

Tightening specifications

ID no.	Name	Screw type	Notes / Remark	Value
A82 051	Coolant compressor on console			42 Nm
A82 052	Clamping latch on console / coolant compressor			20 Nm

For the tightening procedure according to torque using a torque wrench, a maximum variation of the tightening torque of +/- 10% is permissible.

Fastening parts

Standard tools

– Safety information / User information

1	Hexagon head screw	260 Nm
2	Hexagon head screw	260 Nm

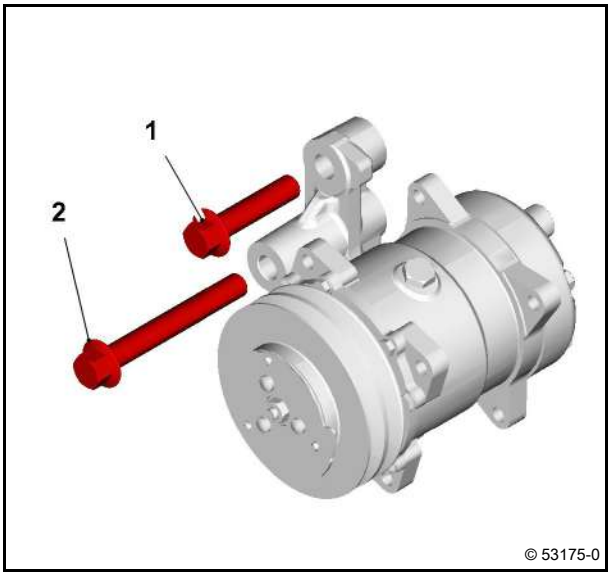

Removing and installing hydraulic pump drive

Standard tools

– Packing compound DEUTZ DW 67

– Safety information / User information

Collect draining lubricating oil and dispose of properly.

A variant of the hydraulic pump drives is described here as an example.

Proceed in the same way for other fittings.

Removing hydraulic pump drive

- Unscrew screws (1).
- Unscrew screws (2).
- Remove hydraulic pump drive (3).

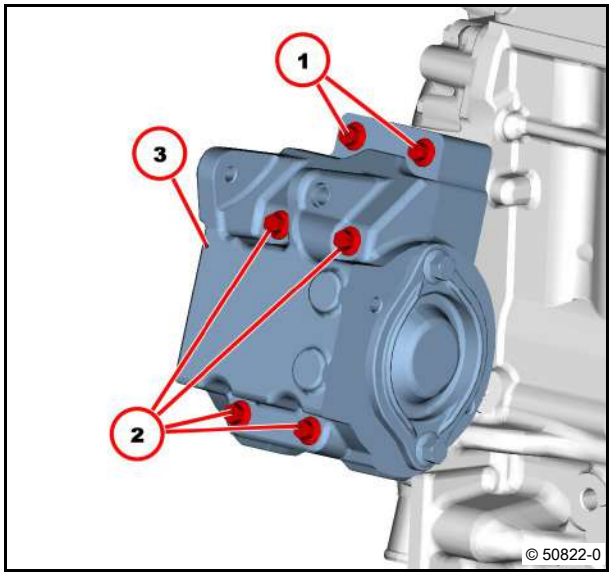

Installing hydraulic pump drive

- Clean sealing surfaces.

Ensure that the clamping pins (1) are present.

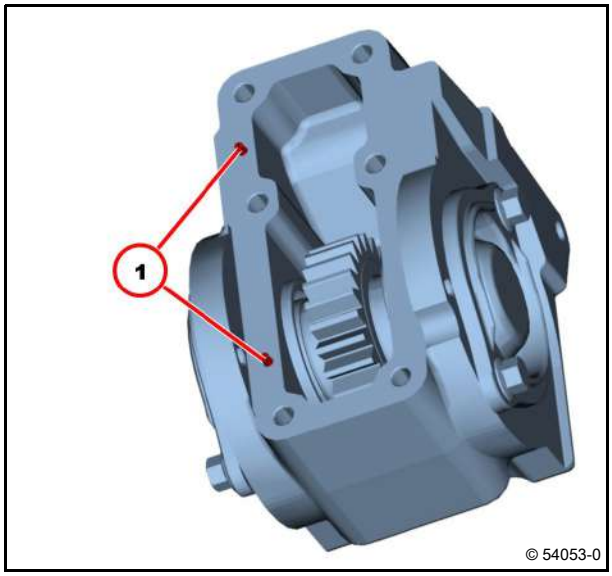

- Apply sealing compound (1) evenly on the sealing surface.

Sealing cord strength approx. 0.5 - 0.6 mm.

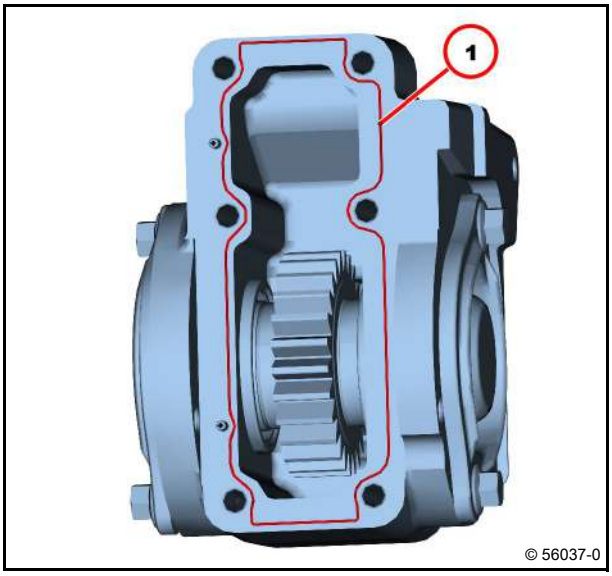

- Center the hydraulic pump drive (1) via the clamping pins.
- Tighten screws (2).
  M8x60-10.9
- Fasten screws (3).
  M8x110-10.9

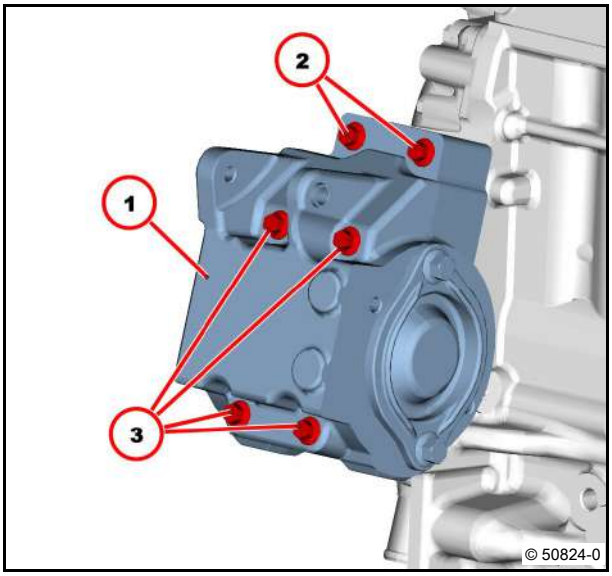

- Tighten all screws according to the tightening sequence.

30 Nm

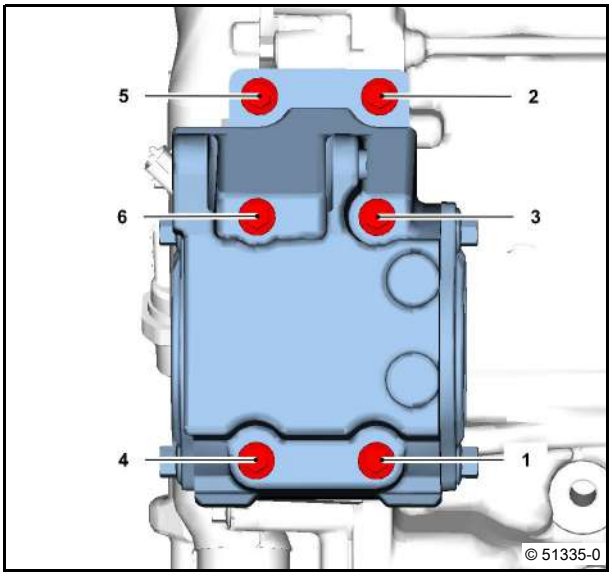

Technical Data

Tightening specifications

ID no.	Name	Screw type	Notes / Remark	Value
A83 003	Hydraulic pump on crankcase/gear case			30 Nm

For the tightening procedure according to torque using a torque wrench, a maximum variation of the tightening torque of +/- 10% is permissible.

8 Special tools

Orders

Special tools::

These must be ordered like normal DEUTZ spare parts with specification of the order number.

01899028
Engine lifting device
Load (2000 kg), 3-point suspension, spindle clamp, cross member, chains and hooks

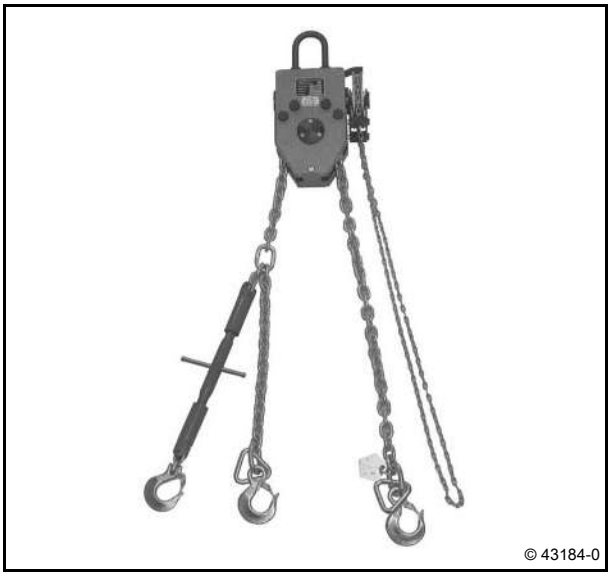

01899031
Pressure pump
Checking cooling system for leak-tightness

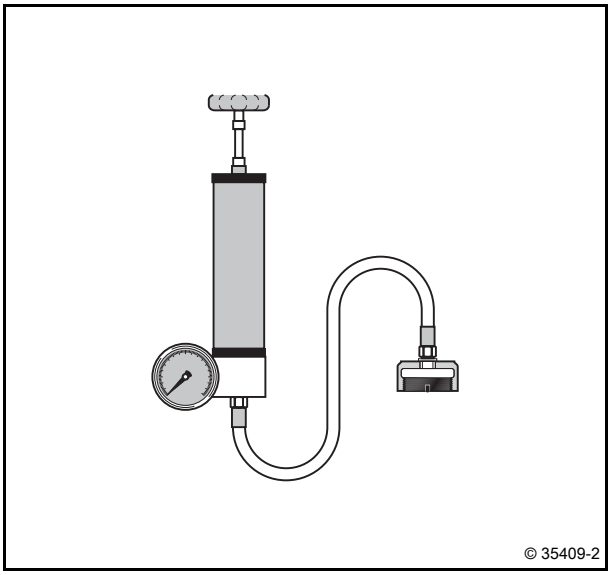

01899034
Compression pressure tester
for diesel engines
10 - 40 bar
Checking compression pressure

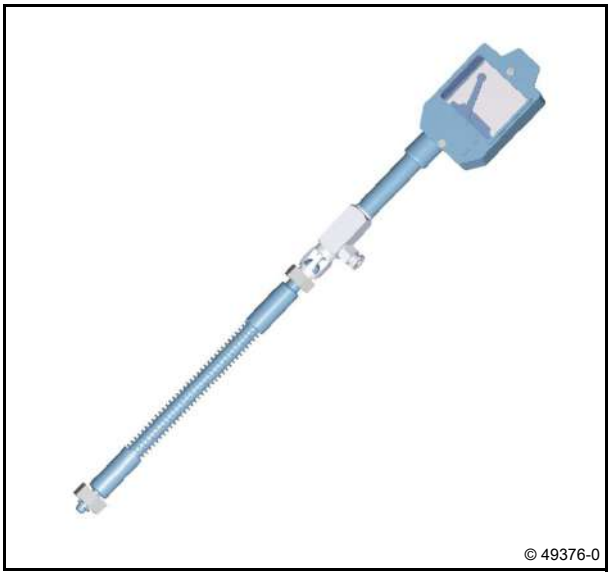

01899037
Hose clip pliers
Loosen hose clips and fasten

01899050
Assembly pliers
Pull out fixed injector sealing disc

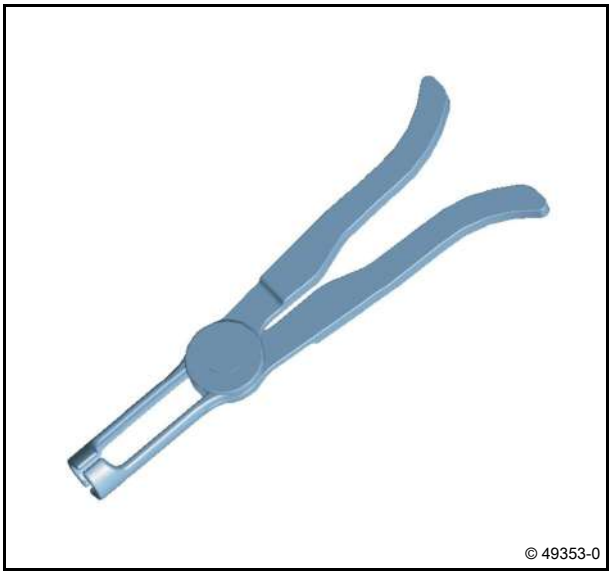

01899062
V-belt tension measuring device
150 to 600 N
Check V-belt tension

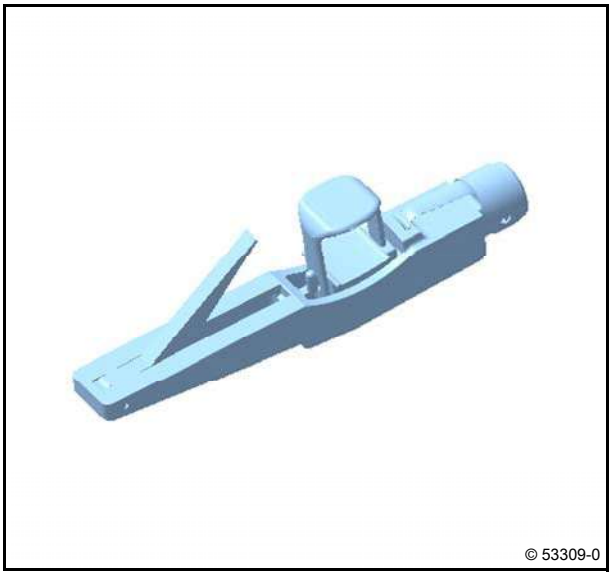

01899092
Torx tool set
Contents of case:
- Double-ended ring spanner E6/E8
- Double-ended ring spanner E10/E12
Socket wrench insert E8 and E10 (1/4 inch)
- Socket wrench insert E10 and E12 (3/8 inch)
- Socket wrench insert E18 (1/2 inch)

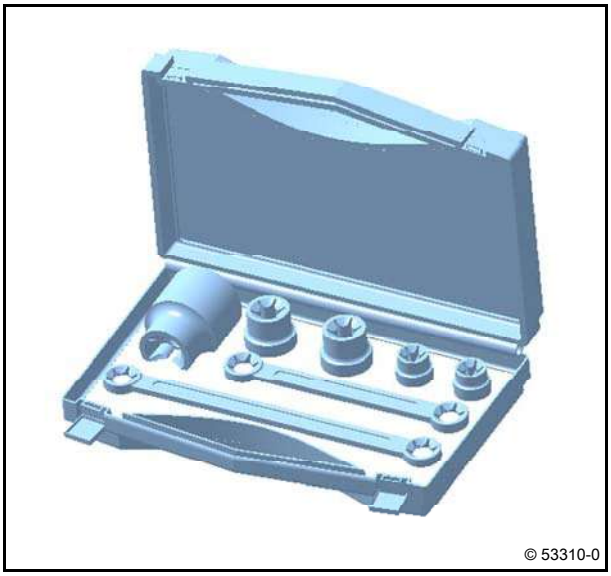

01899093
Rotation angle disc
with solenoid

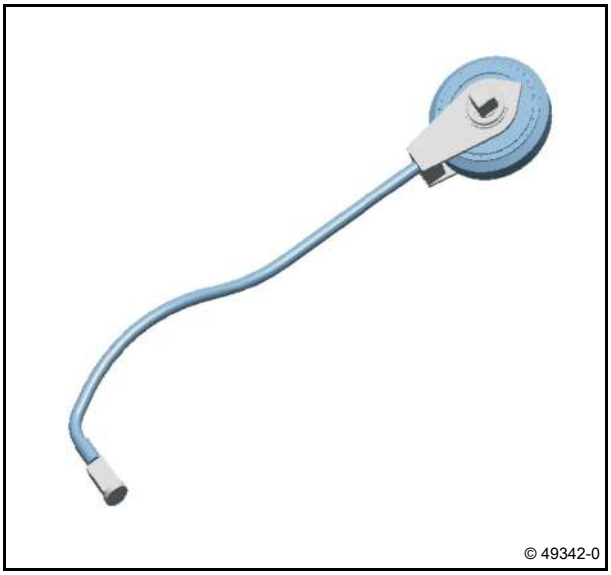

01899103
Pricker
Removing rotary shaft lip seal

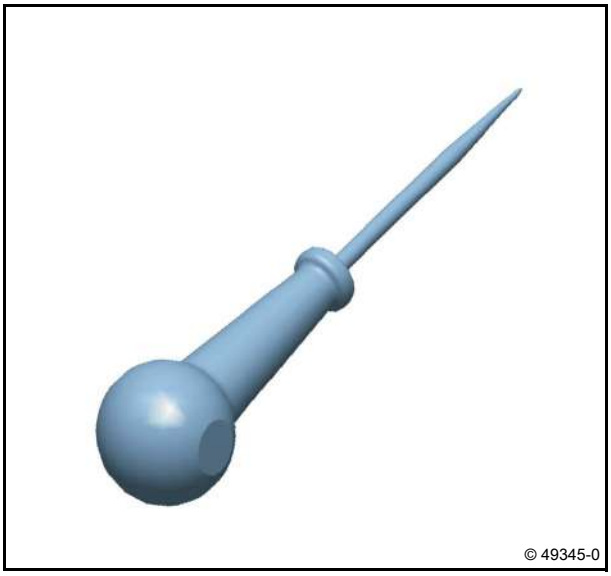

01899105
Disassembly tool
Disassemble pin screw
(M10)

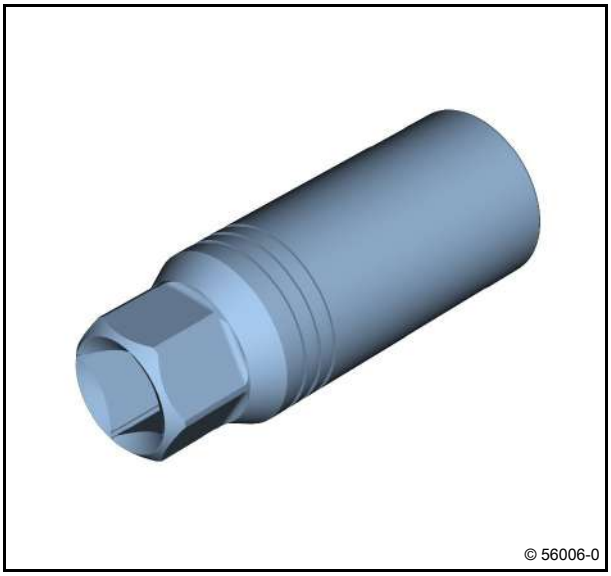

01899106
Disassembly tool
Disassemble pin screw
(M12)

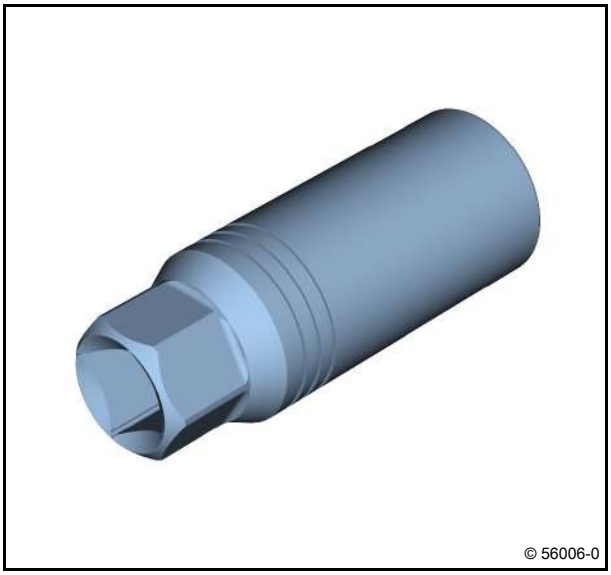

01899108
Disassembly tool
Disassemble pin screw
(M8)

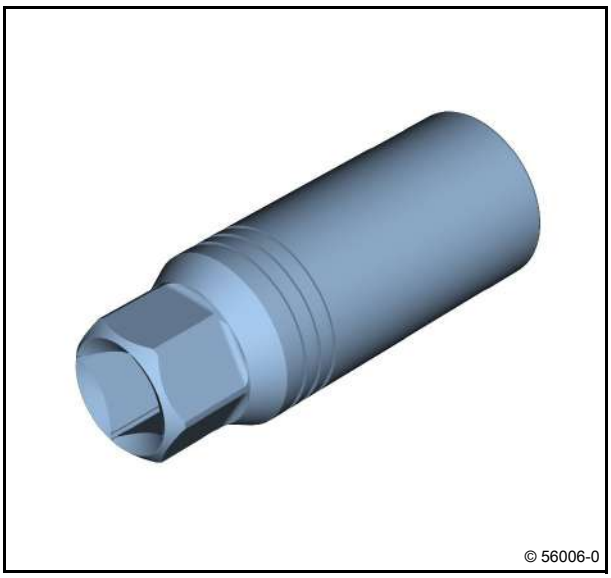

01899110
Assembly lever
Removing crankshaft sealing rings

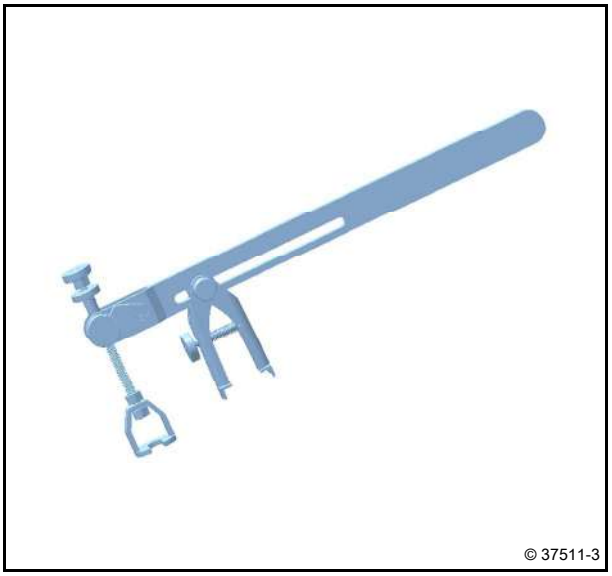

01899112
Spring band pliers
320 mm
Tighten spring clamp

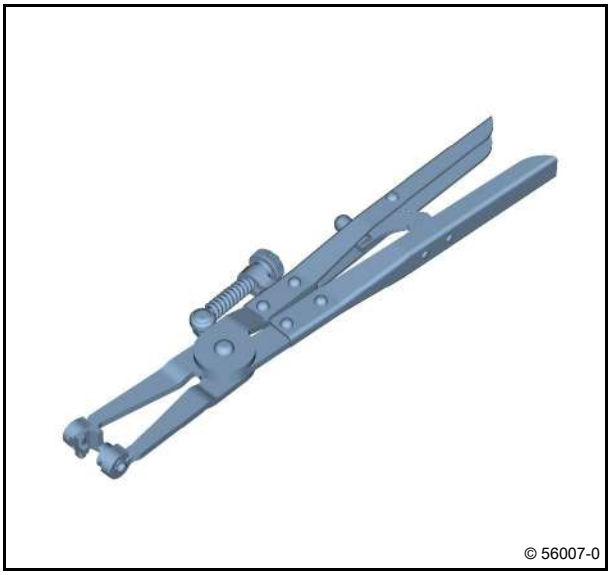

01899132
Socket wrench insert
Wrench size 27,
Version: long
Removing and installing the pressure sensors
(rail pressure, oil pressure, fuel pressure)

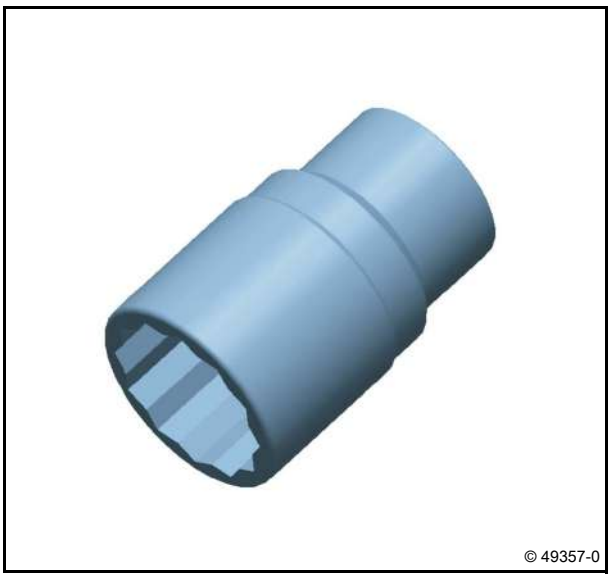

01899142
Special wrench
Unscrewing the filter cartridges

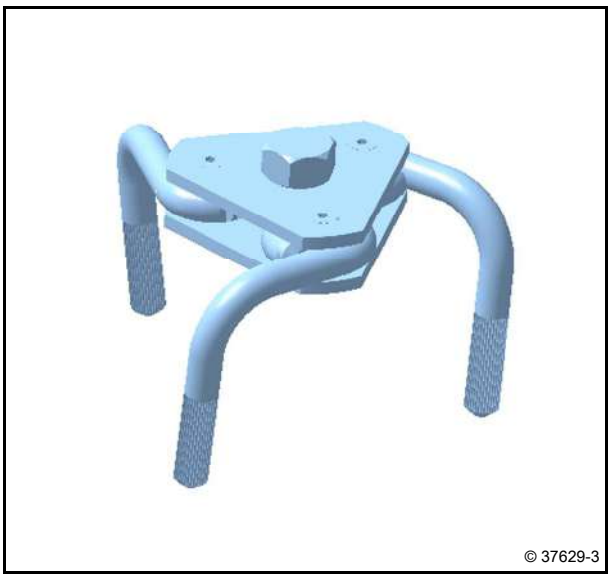

01899144
Stoppers/caps
1 set of differently-sized stoppers and caps
Sealing openings on the fuel system

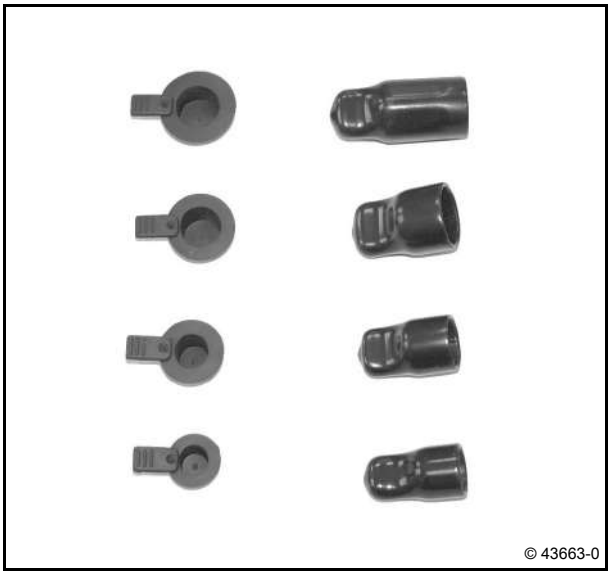

01899148
Assembly tool
Mount pin screw
(M8)

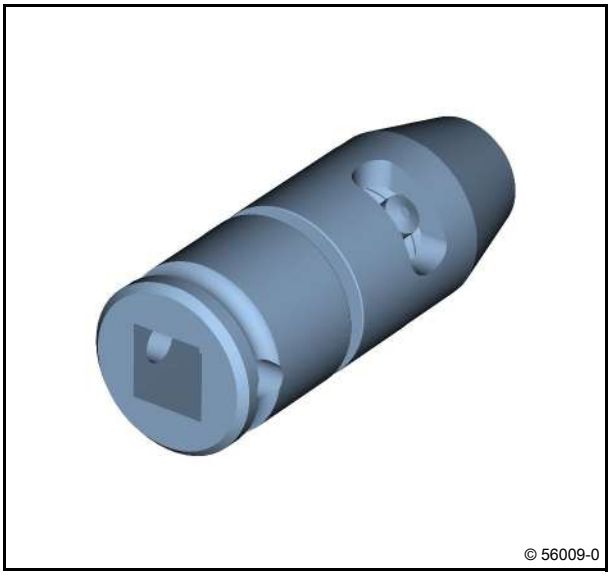

01899149
Assembly tool
Mount pin screw
(M10)

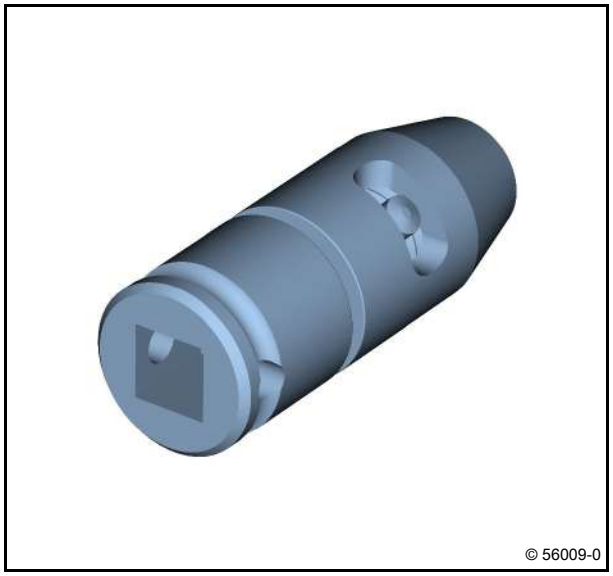

01899150
Assembly tool
Mount pin screw
(M12)

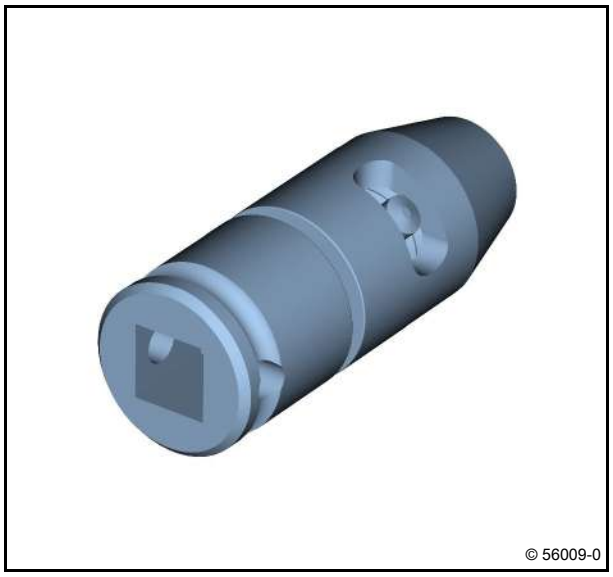

01899199
Socket wrench insert
Size 36,
Removing and installing the centre screw

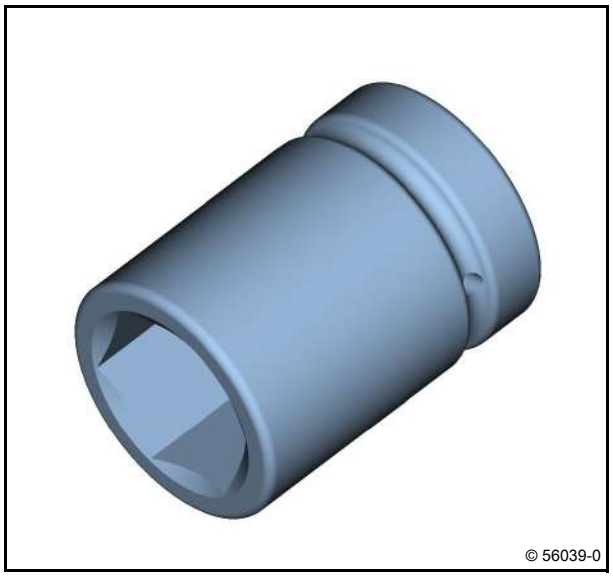

01899370
Force multiplier
Removing and installing the centre screw

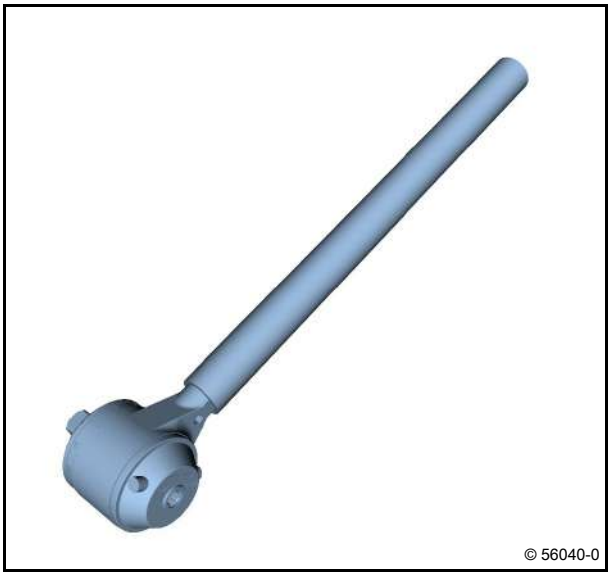

02992017
Connector
(in conjunction with compression pressure tester 01899034)

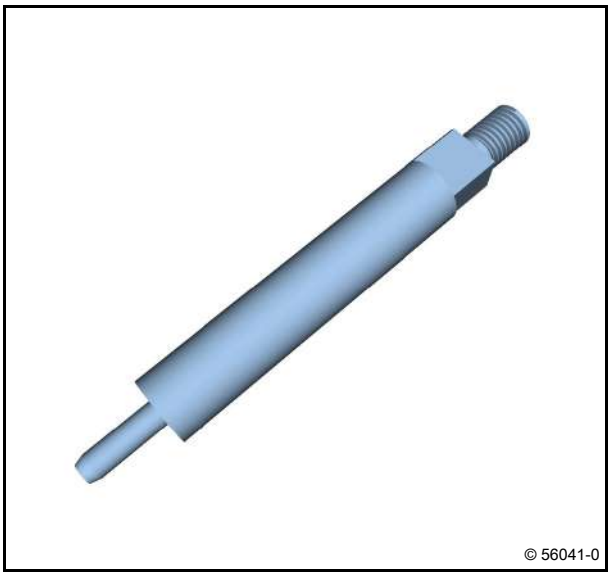

02992117
Lever tool
Removing the injector

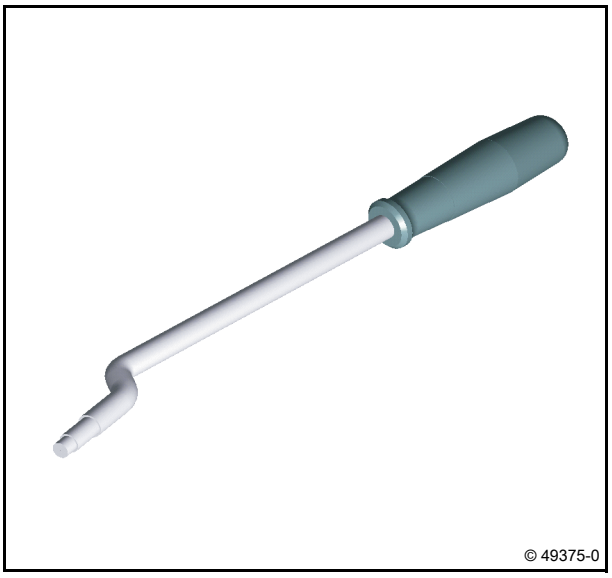

02992127
Disassembly tool
Removing O-ring

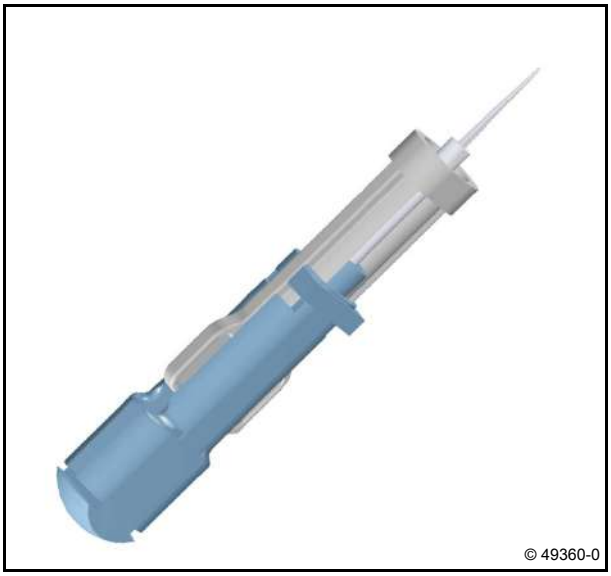

02992138
Puller
(in conjunction with slide hammer 02992294)
Removing fixed injector sealing disc

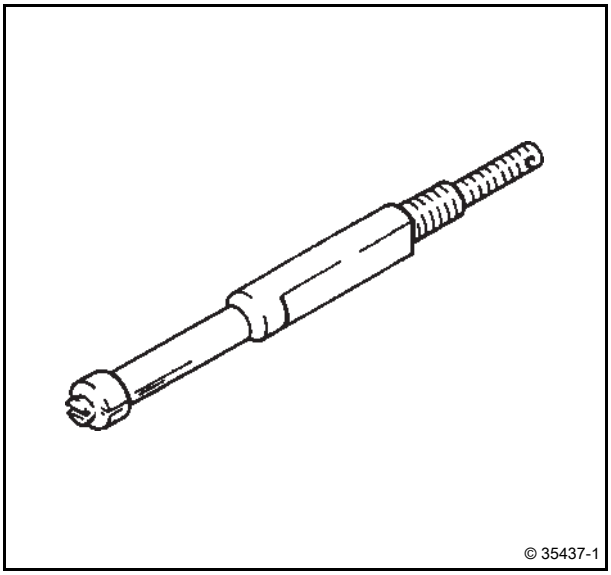

02992214
Assembly tool
Installing crankshaft sealing ring
(flywheel side)

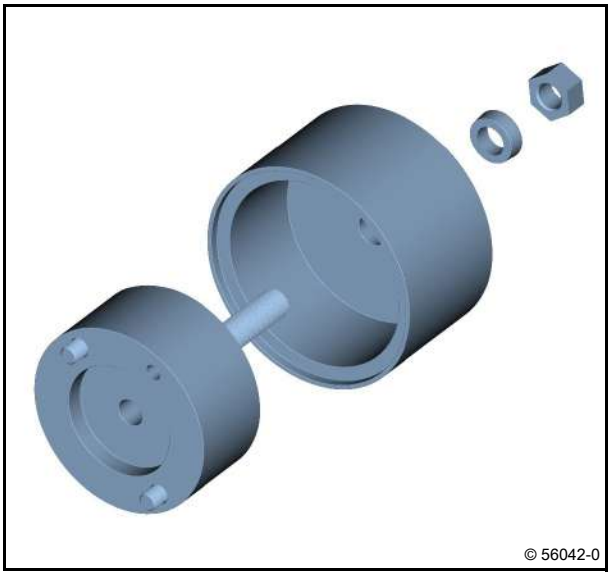

02992452
Assembly tool
Installing crankshaft sealing ring
(opposite side to flywheel)

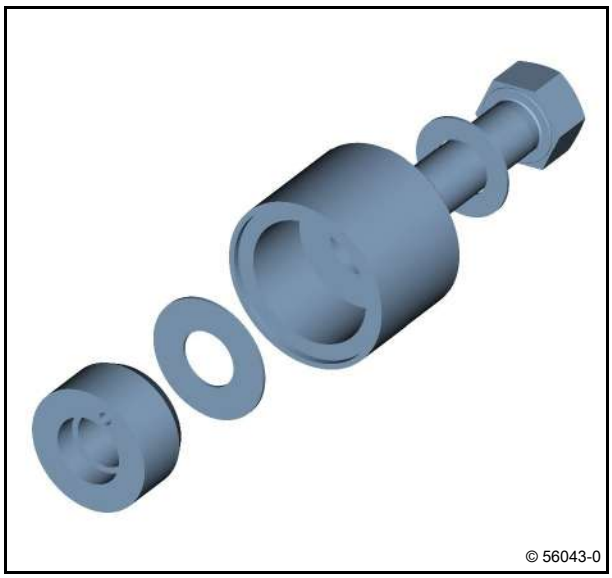

02992294
Slide hammer
(in conjunction with extraction tool 02992137)
Removing fixed injector sealing disc

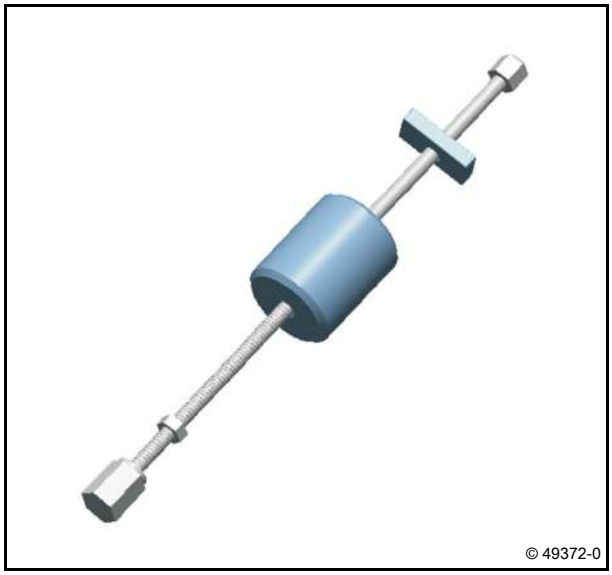

02992301
Separating tool
Removing metal sheet lubricating oil pan from crank-case

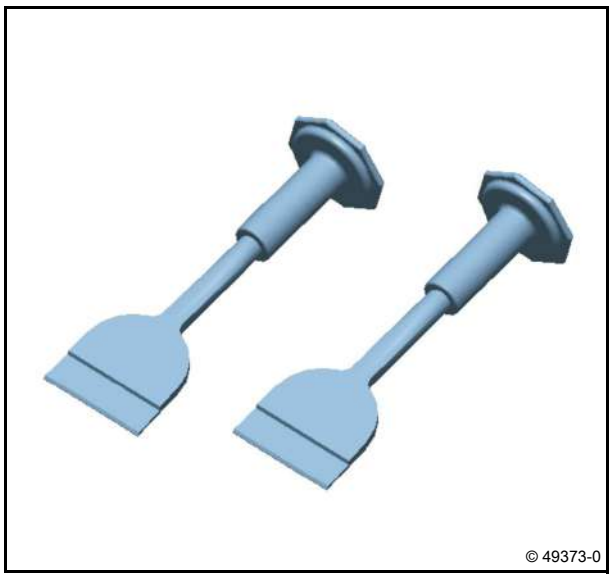

02992380
Turning gear / locking device
Turn or block crankshaft at the flywheel

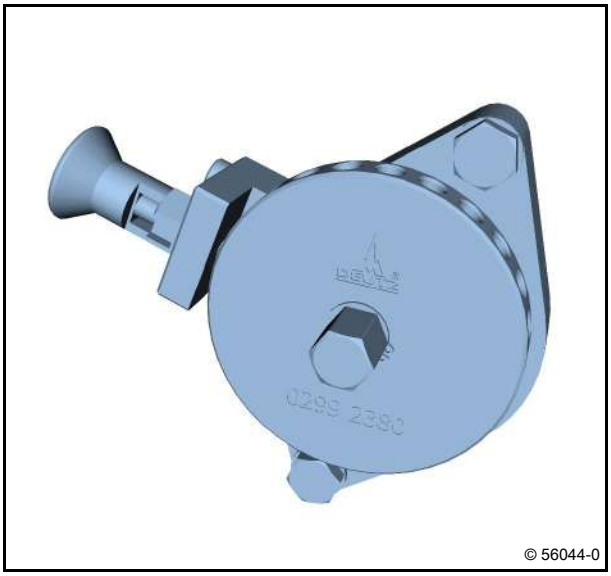

© 56044-0

02992475
Counter support
Hold crankshaft against the V-belt pulley/V-ribbed pulley.

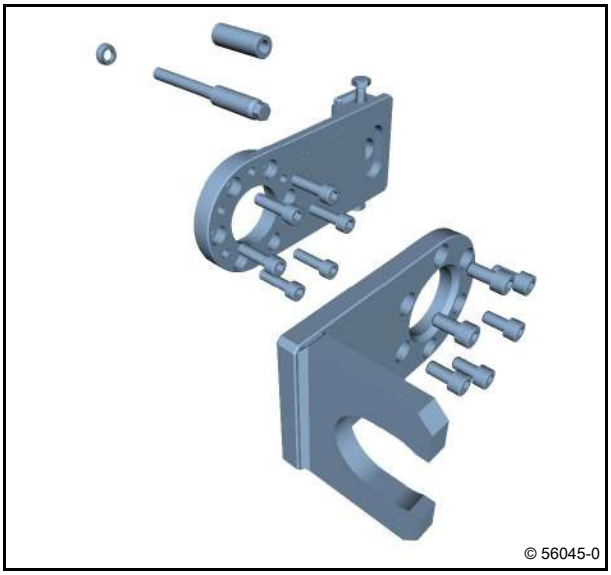
© 56045-0

02992477
Special wrench
Wrench size 17,
Removing and installing high-pressure lines

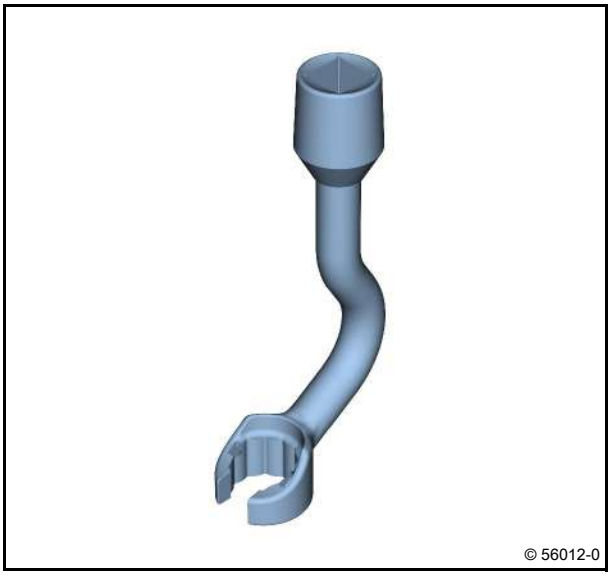
© 56012-0

11.4.Boom Assembly

Boom Component Terminology

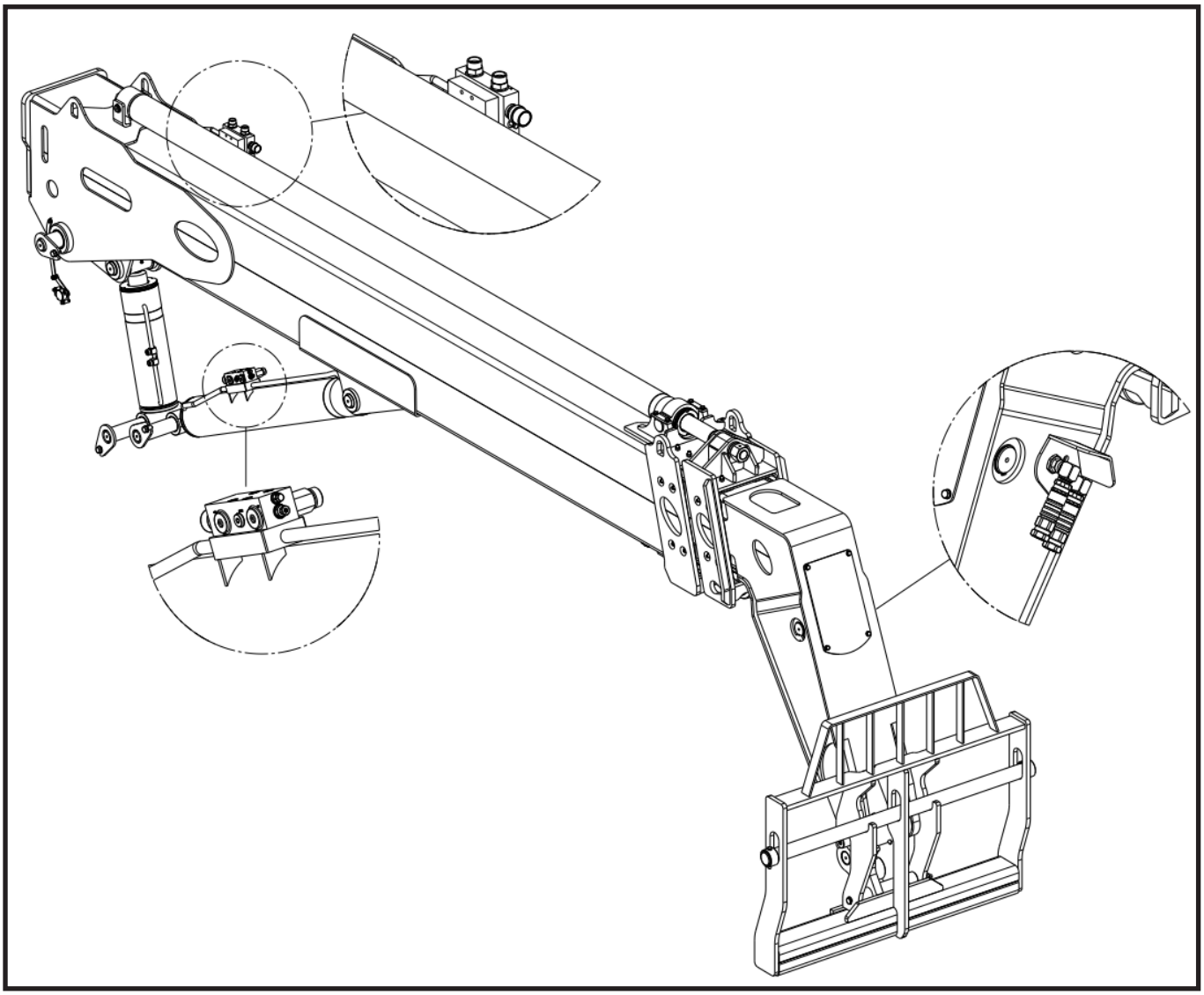

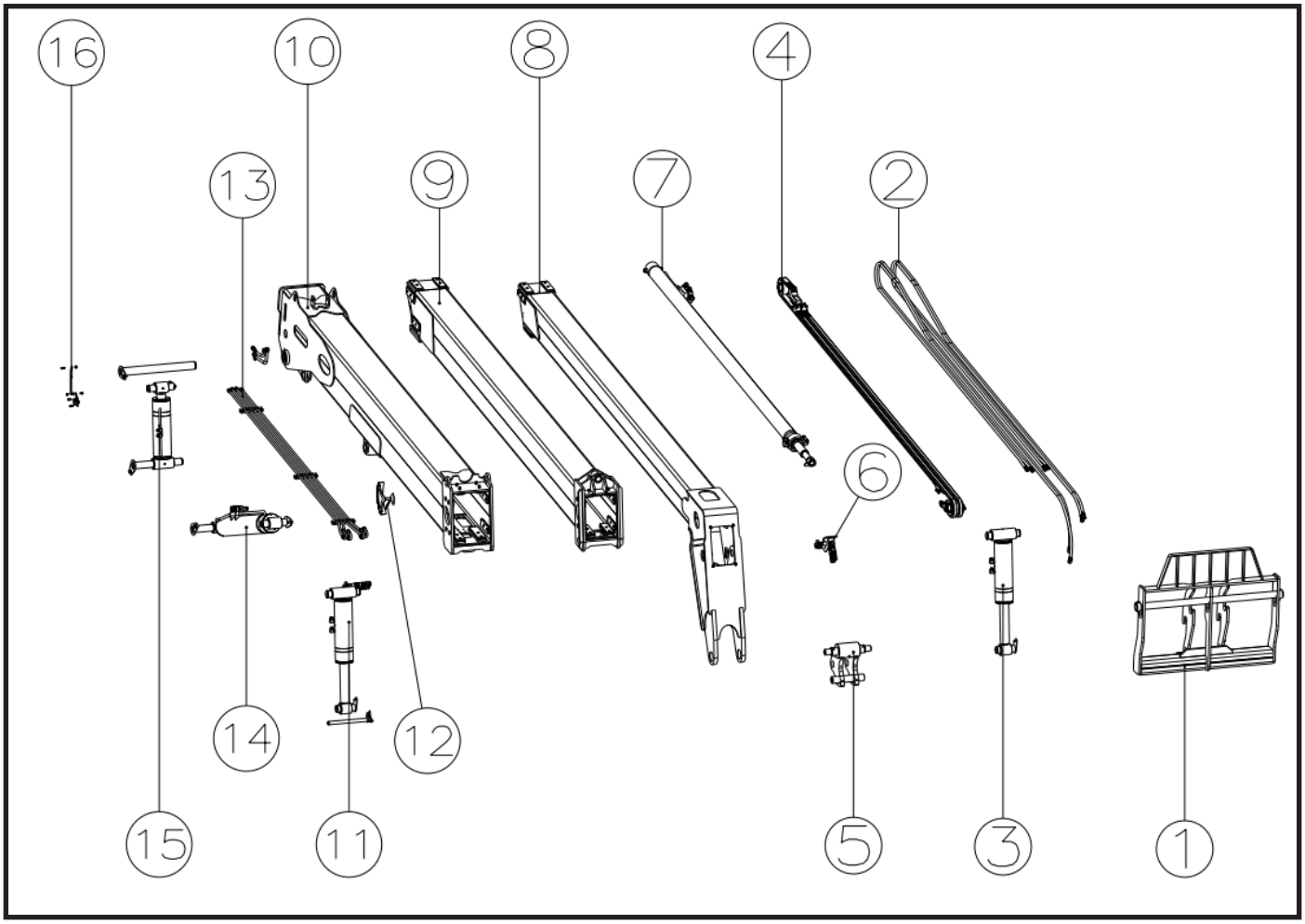

1	Fork	9	First Extension Boom Mounting
2	Hydraulic Hoses	10	Fix Boom
3	Tilt Cylinder	11	Cylinder Mounting
4	Chain Roller Assembly	12	Boom Angle Gauge
5	Attachment Structure Mounting	13	Boom Hoses
6	Quick Coupling Mounting	14	Lift Cylinder Mounting
7	Extension Cylinder Mounting	15	Compansator Cylinder Mounting
8	Second Extension Boom Mounting	16	Angle Gauge

Extension Cylinder Replacement

1. Confirm the boom assembly is set on stable, secure and suitable supports.
2. Properly support the extend/retract cylinder using a hoist or crane.
3. Extend the First Boom by 30 cm.
4. Remove the Set Screw (**1**) inside the Spindle Nut.
5. Remove the Spindle Nut (**2**).

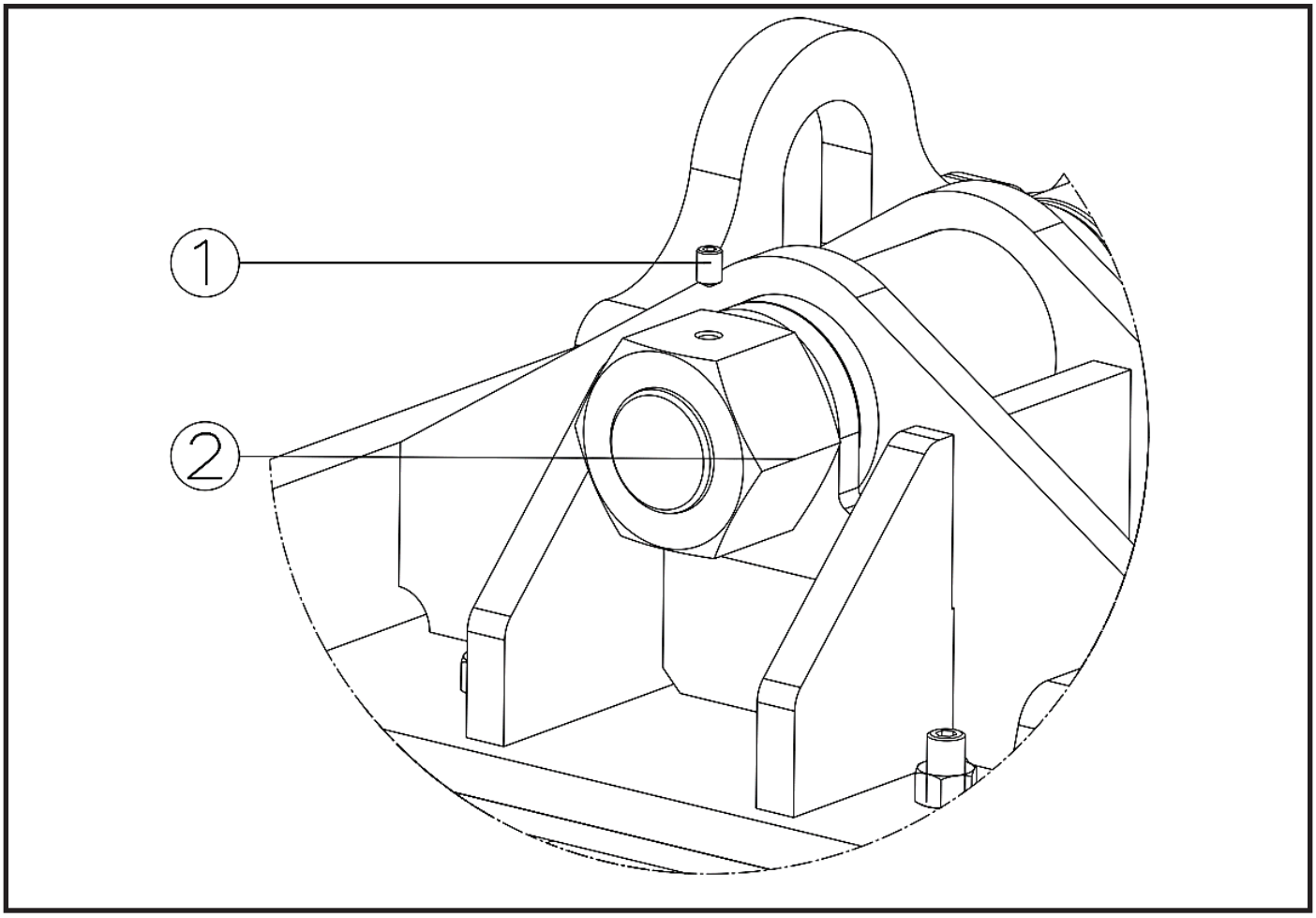

6. Remove the Cylinder Front Clamp Connection (**3**).

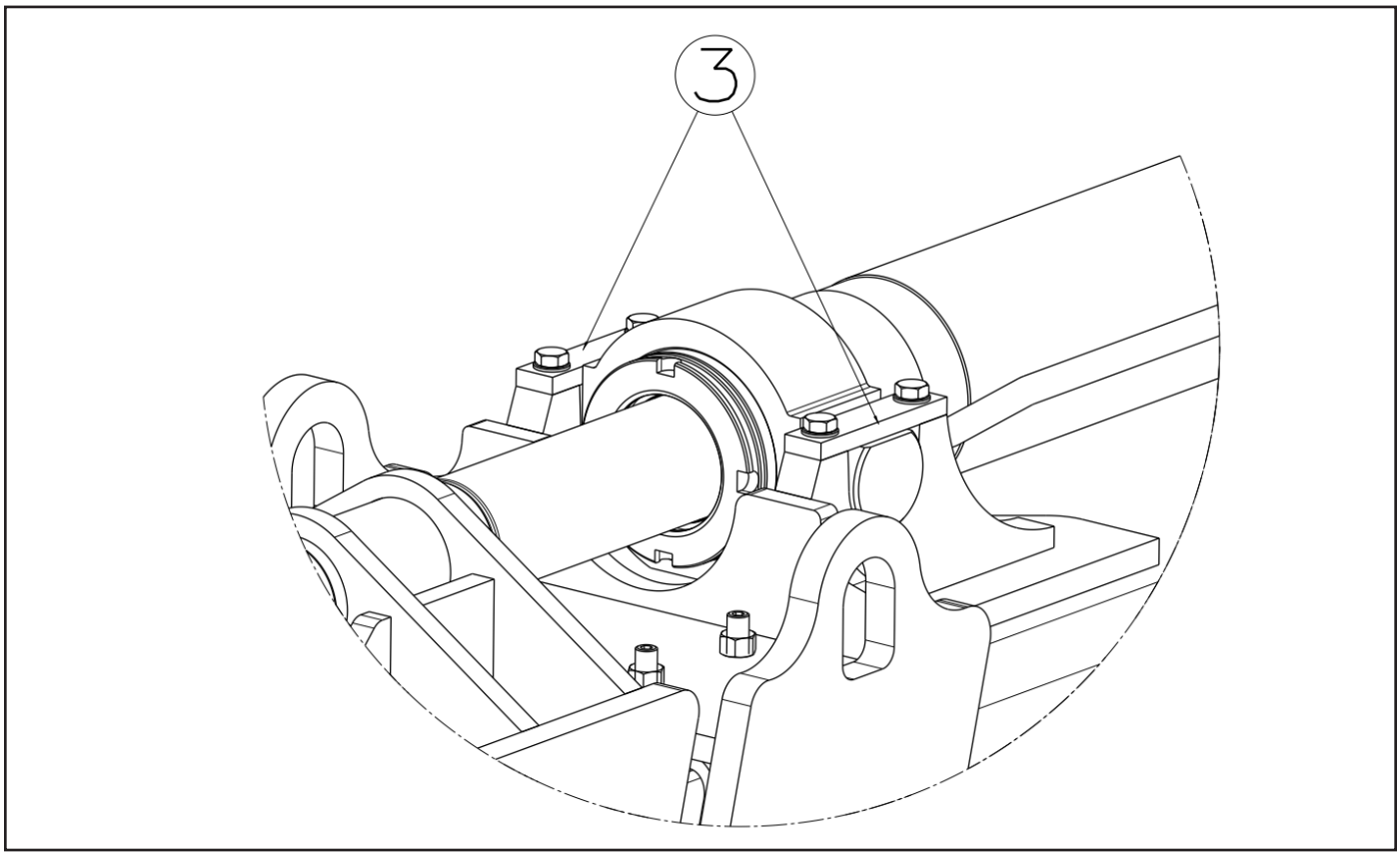

7. Loosen and remove the hoses (**4**) on the valve.
8. Unscrew the rear Pin of the Cylinder (**5**).

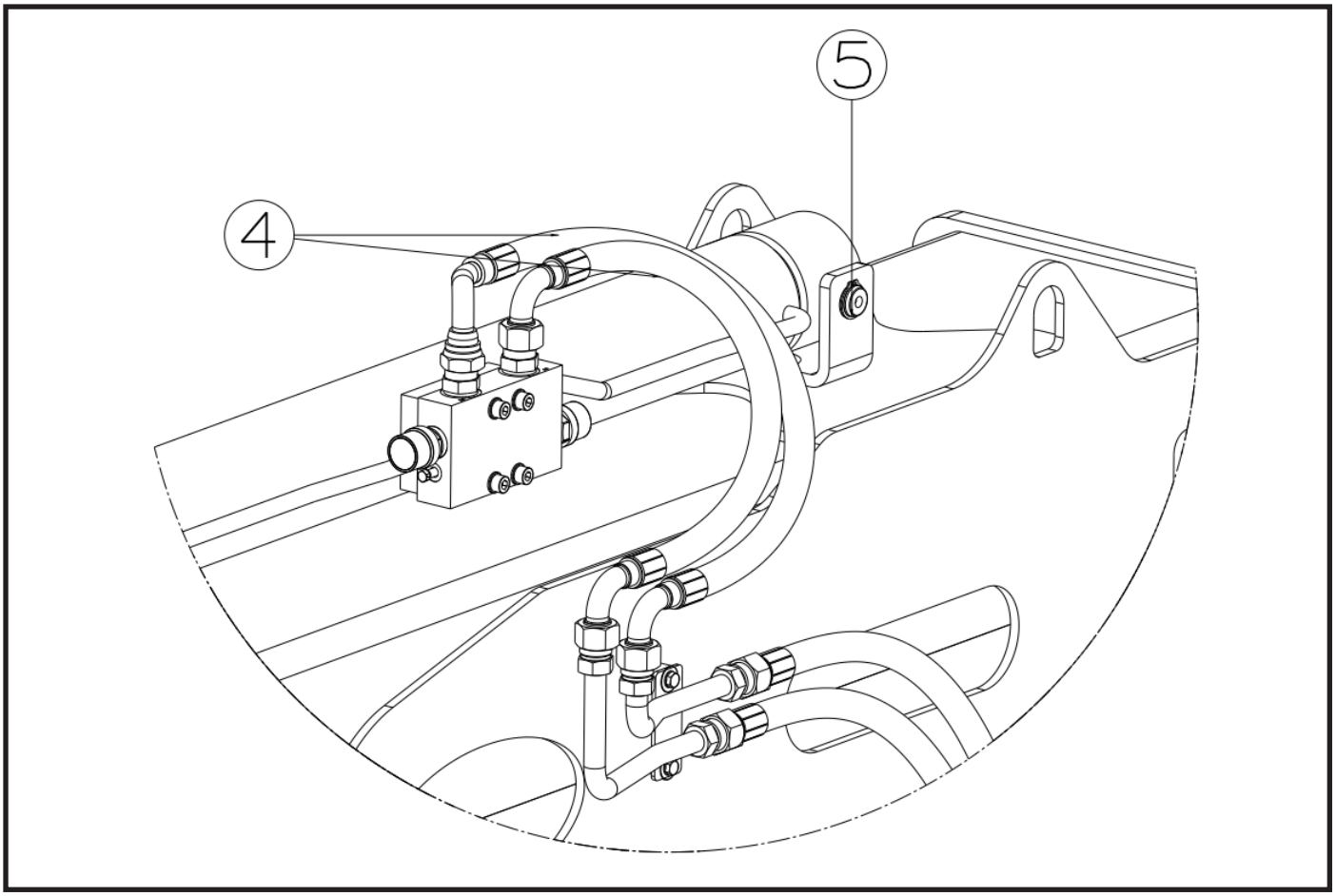

9. Connect the Extension Cylinder (6) with a crane and disassemble it from the boom.

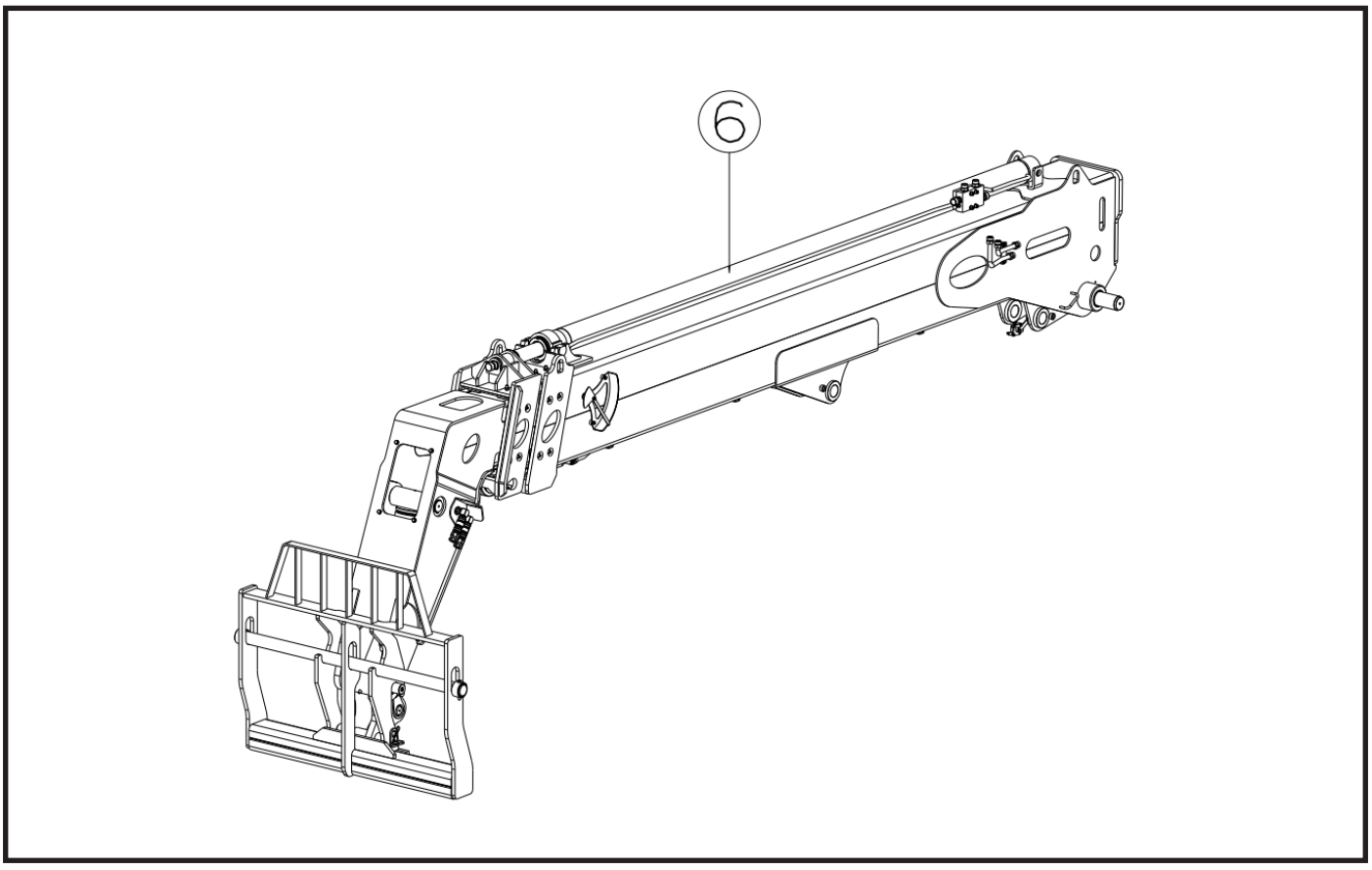

Second – First Boom Section Removal

1. Remove the Extension Cylinder (**1**). *Refer to section Extension Cylinder Replacement*.

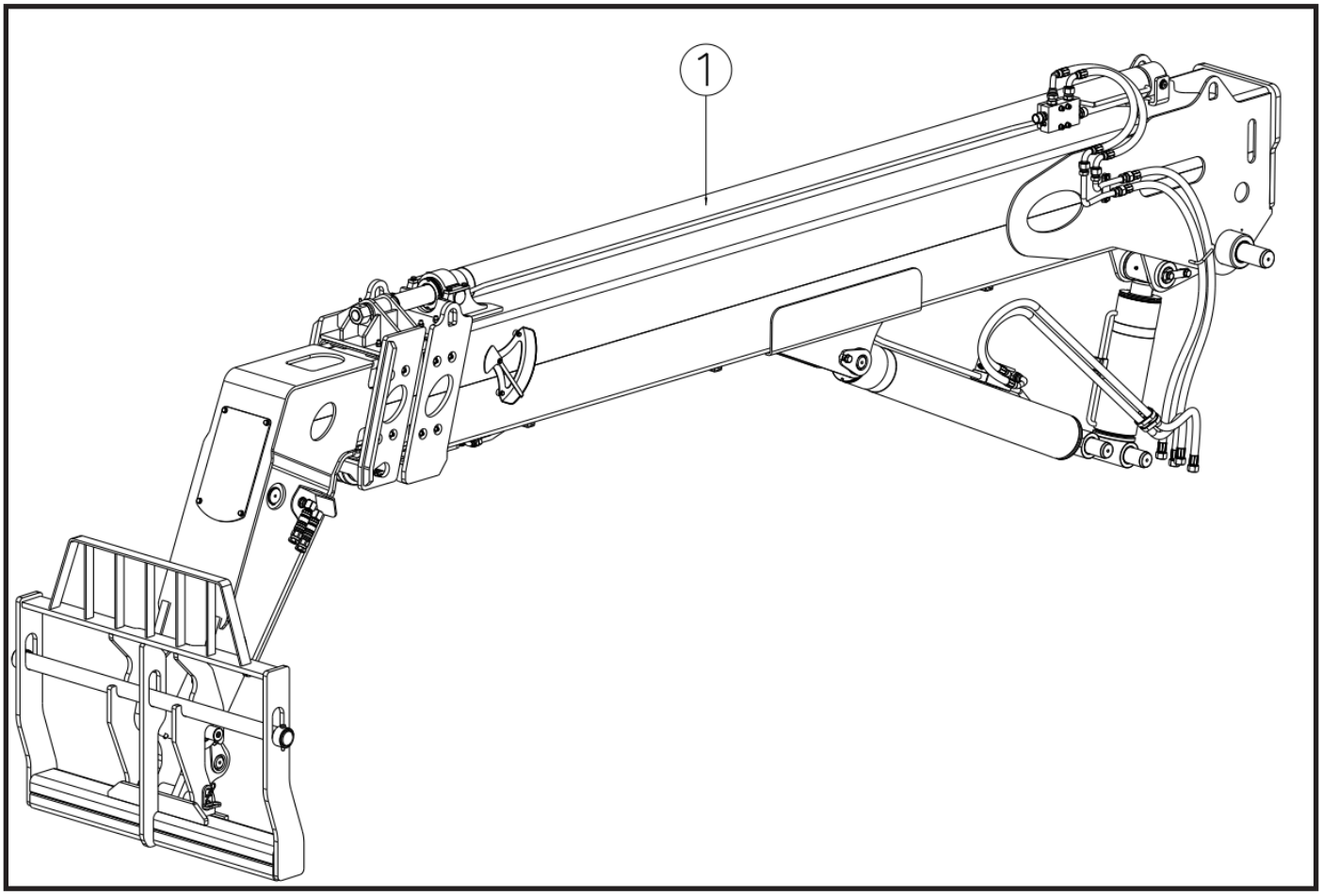

2. Unscrew the plumbing pipes at the bottom of the boom (**2**).

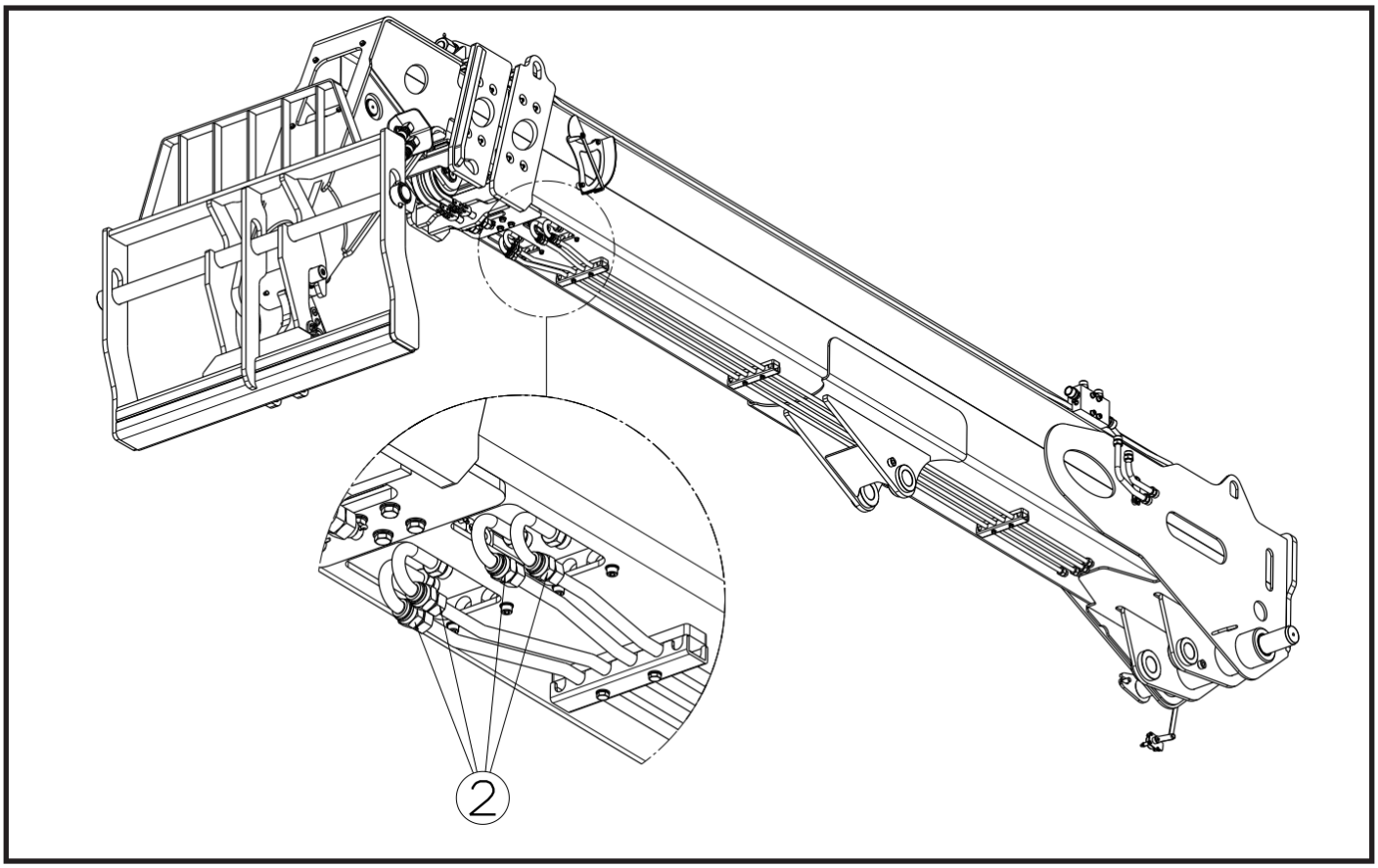

3. Remove the boom front cover.

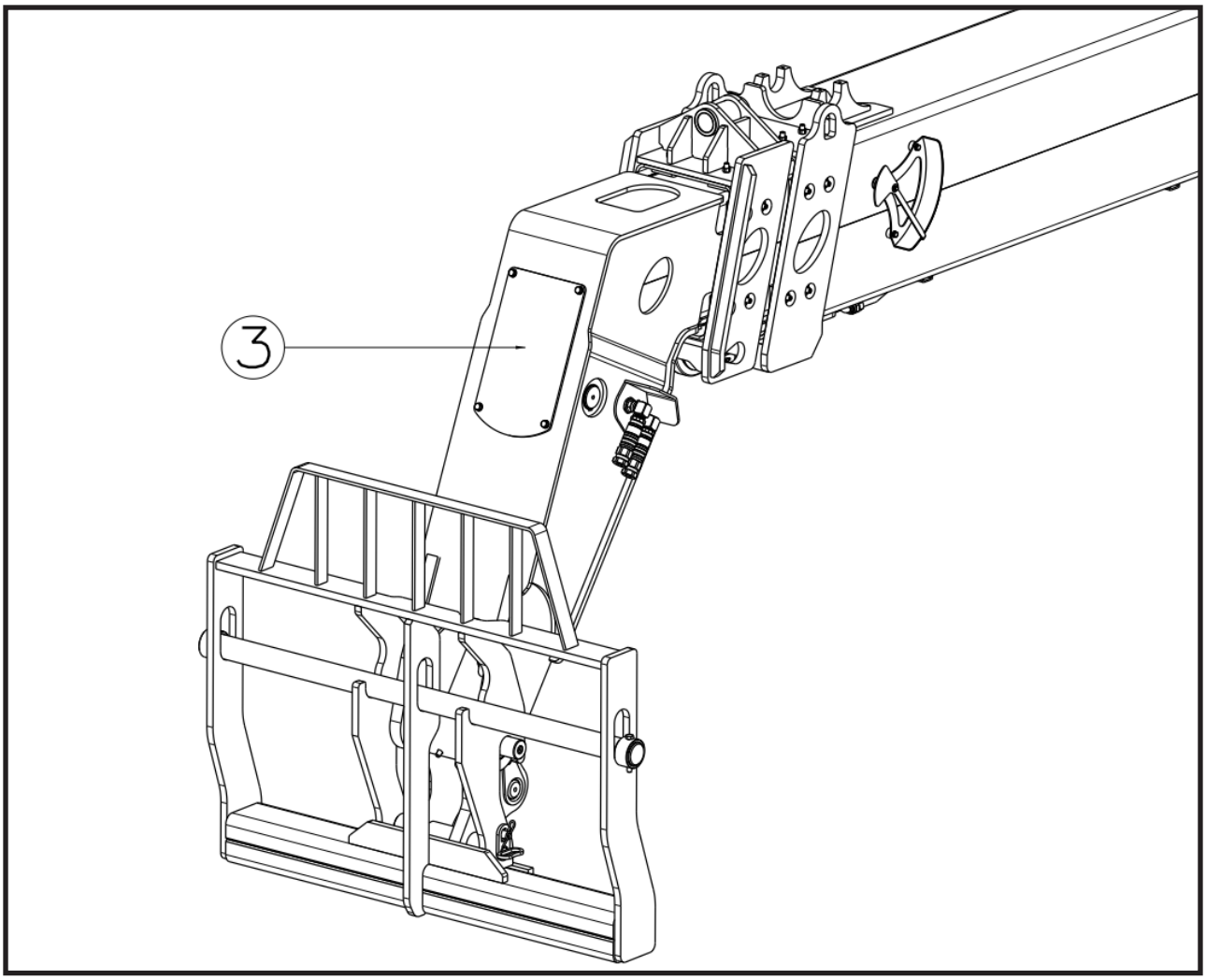

4. Unscrew the Hydraulic Hoses (**4**).
5. Remove the removed Hydraulic Hoses by pulling them out from under the boom.

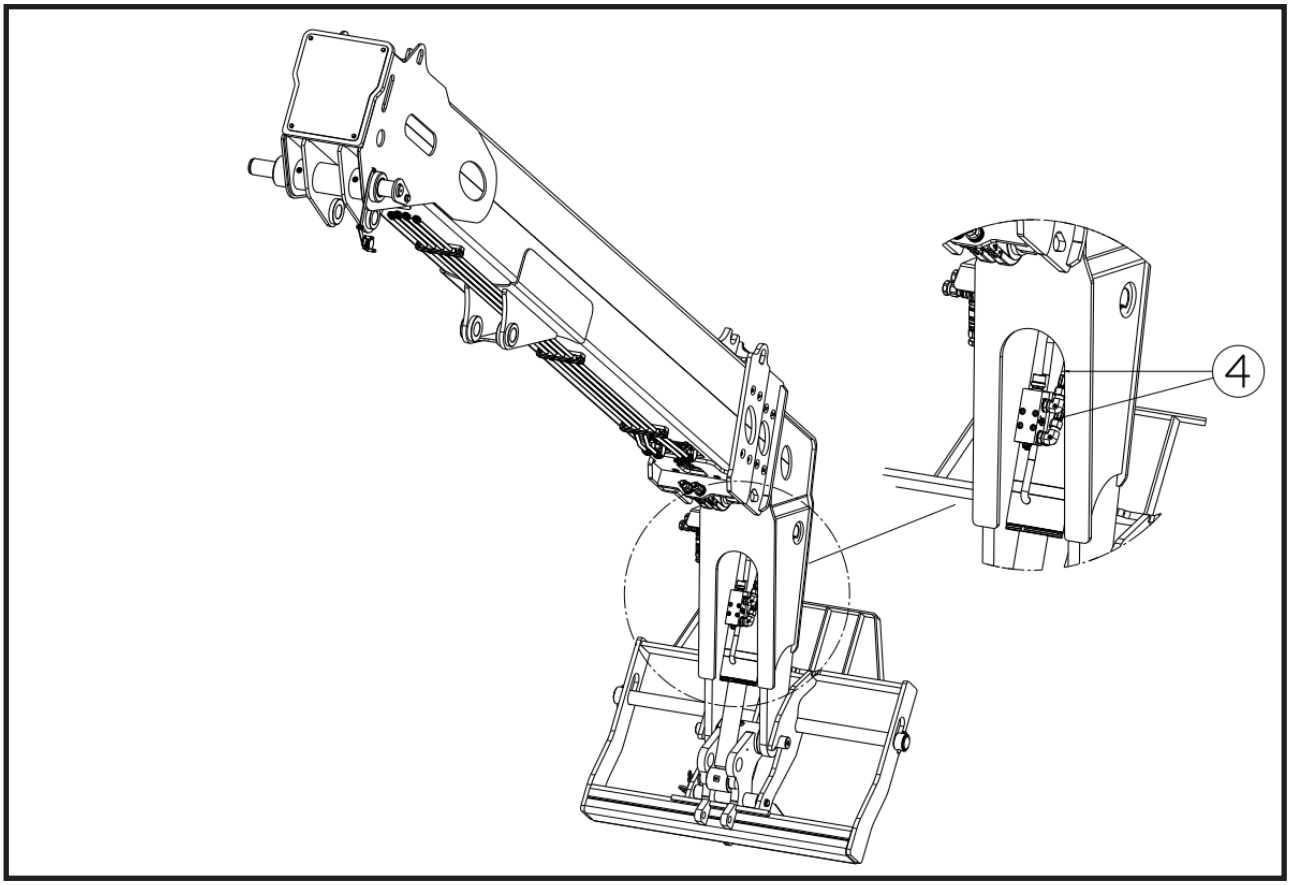

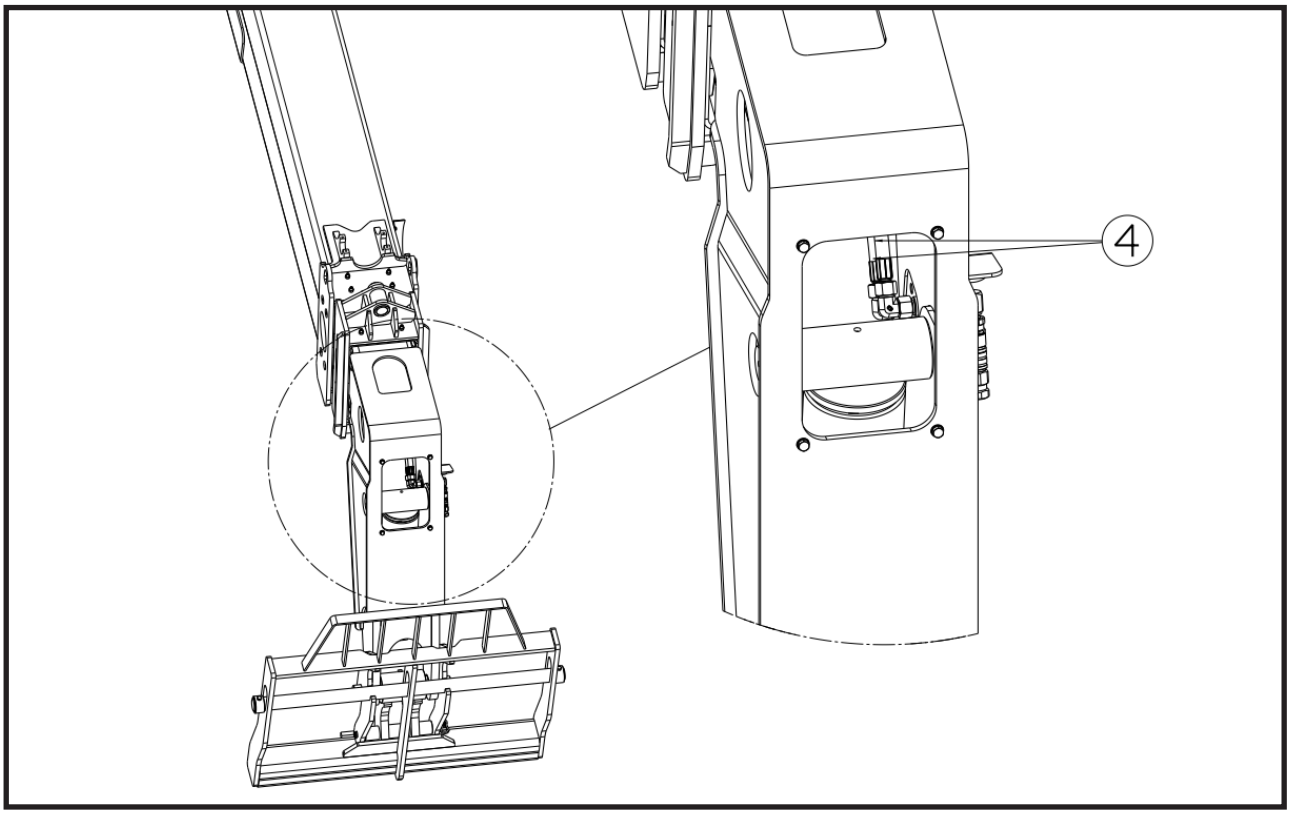

6. Unscrew the chain links (**5**) from the bottom of the boom.

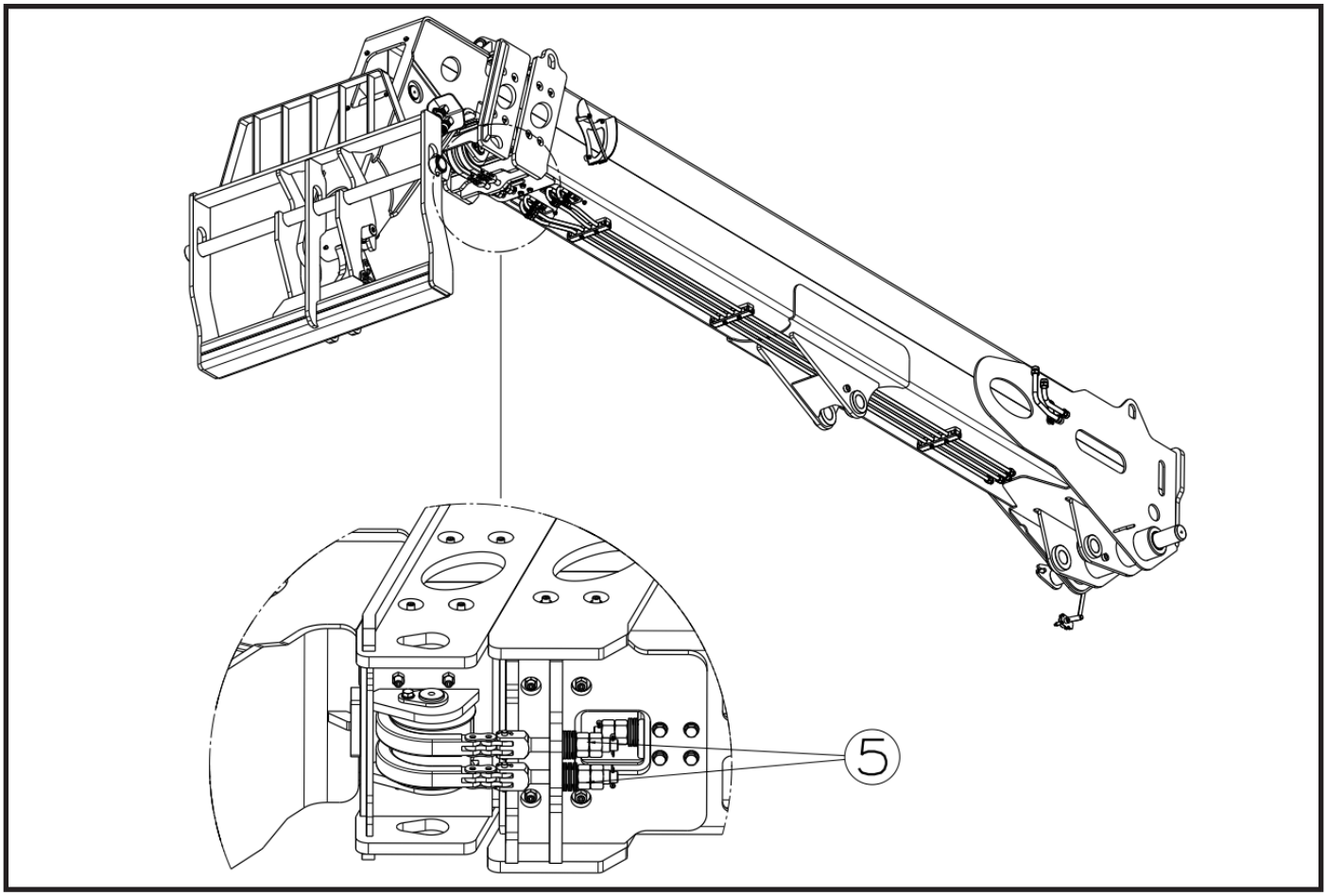

7. Remove the Wear Pads by unscrewing the bolts (**6**).

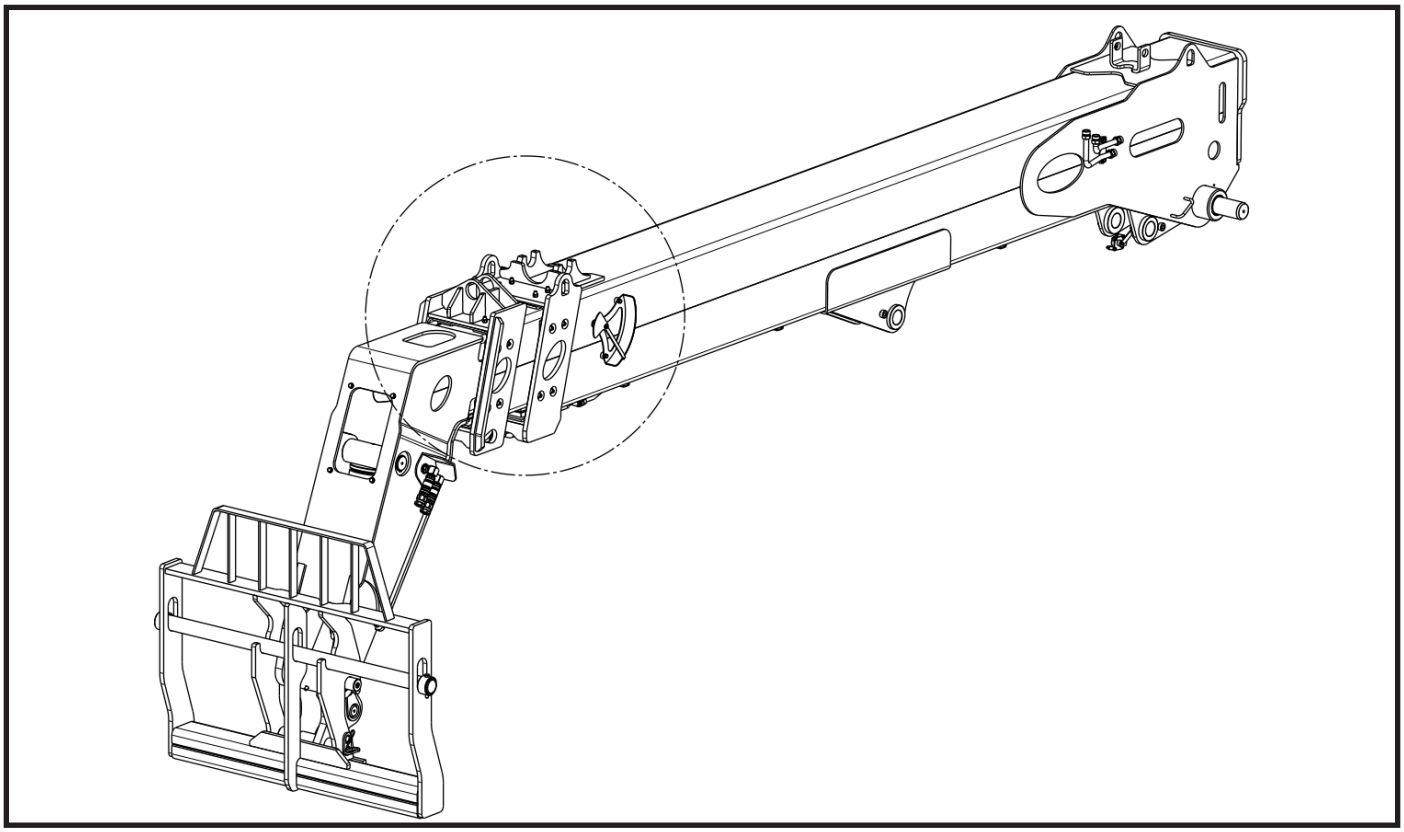

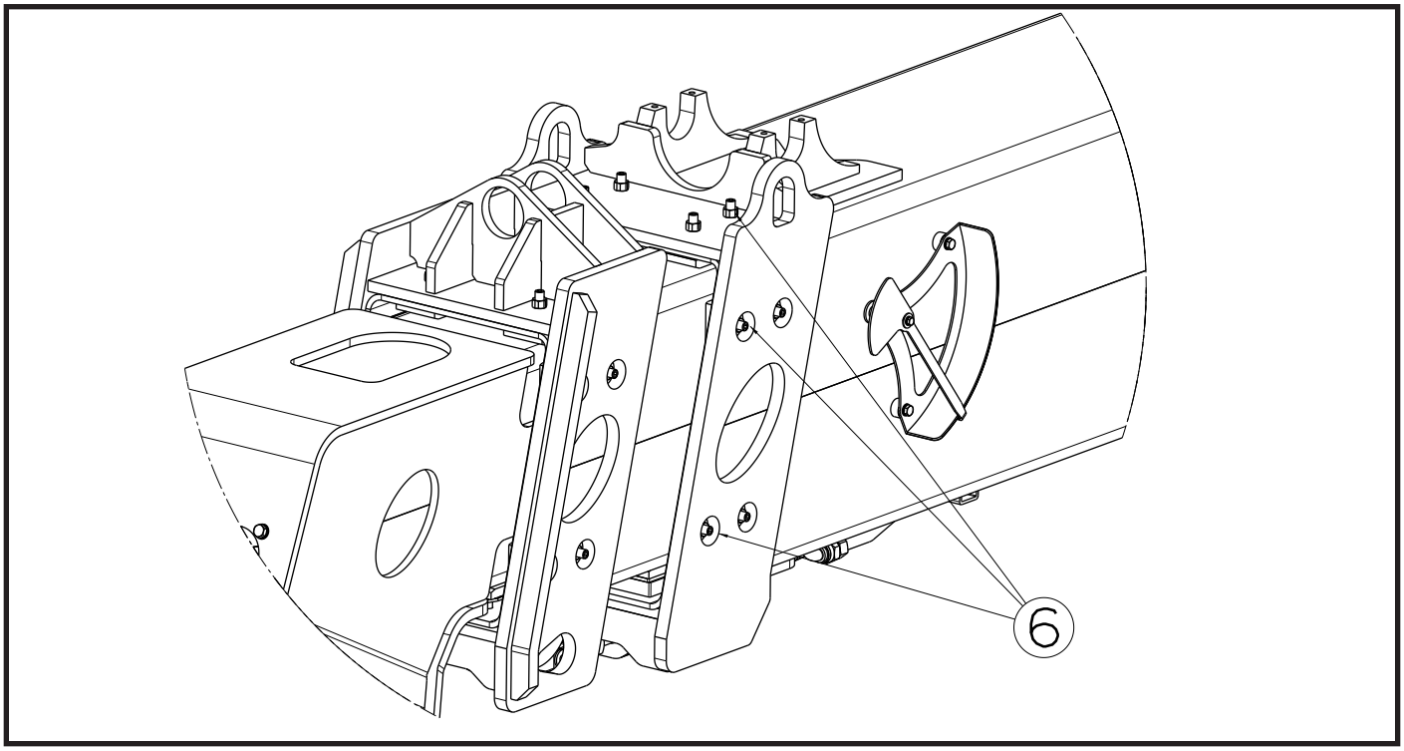

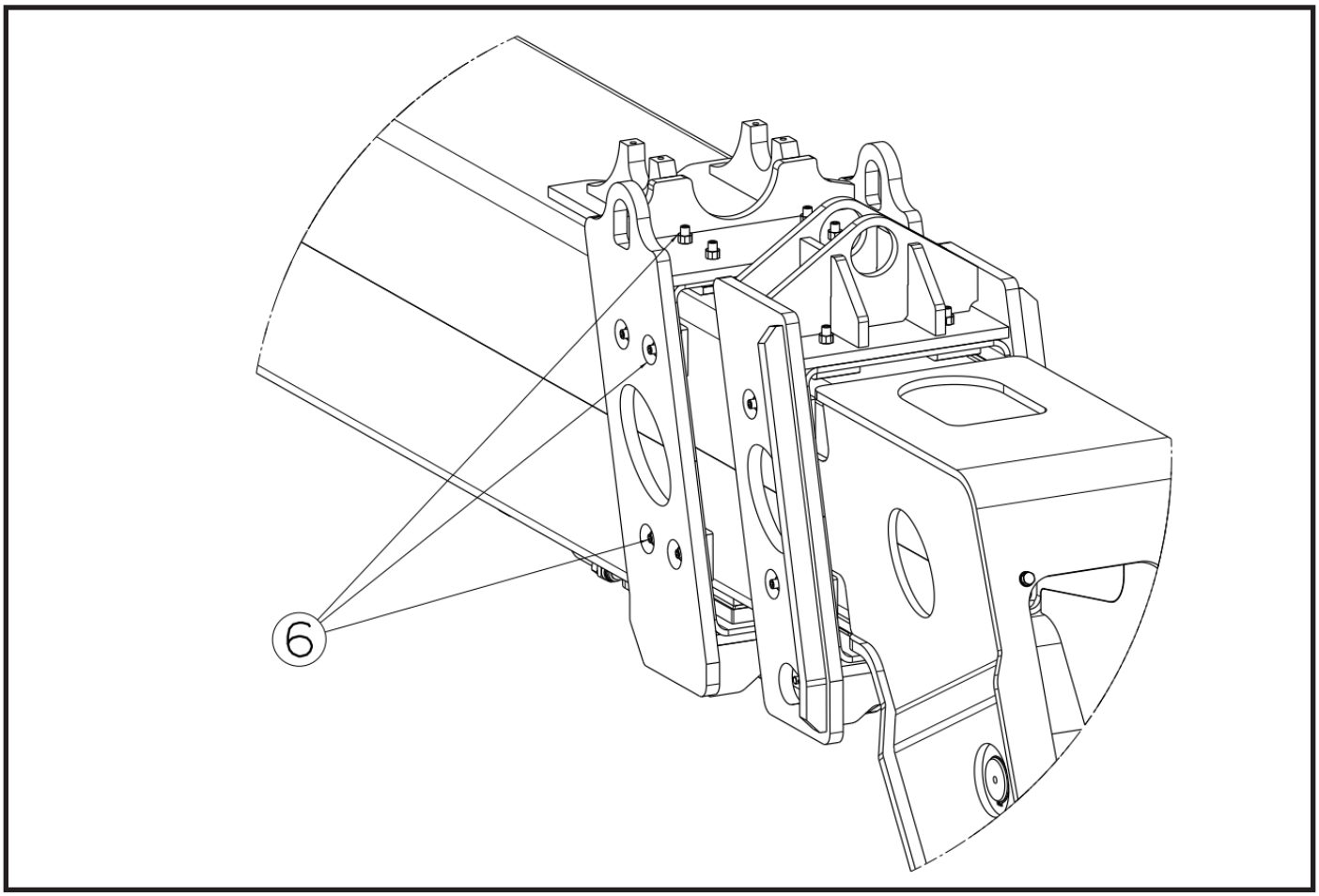

8. Secure the Fix Boom and pull out the First-Second boom.

First – Fix Boom Removal

1. Remove the Second-First Boom Assembly. *Refer to section Second-First Boom Section Removal*
2. Remove the Wear Pads (**1**).

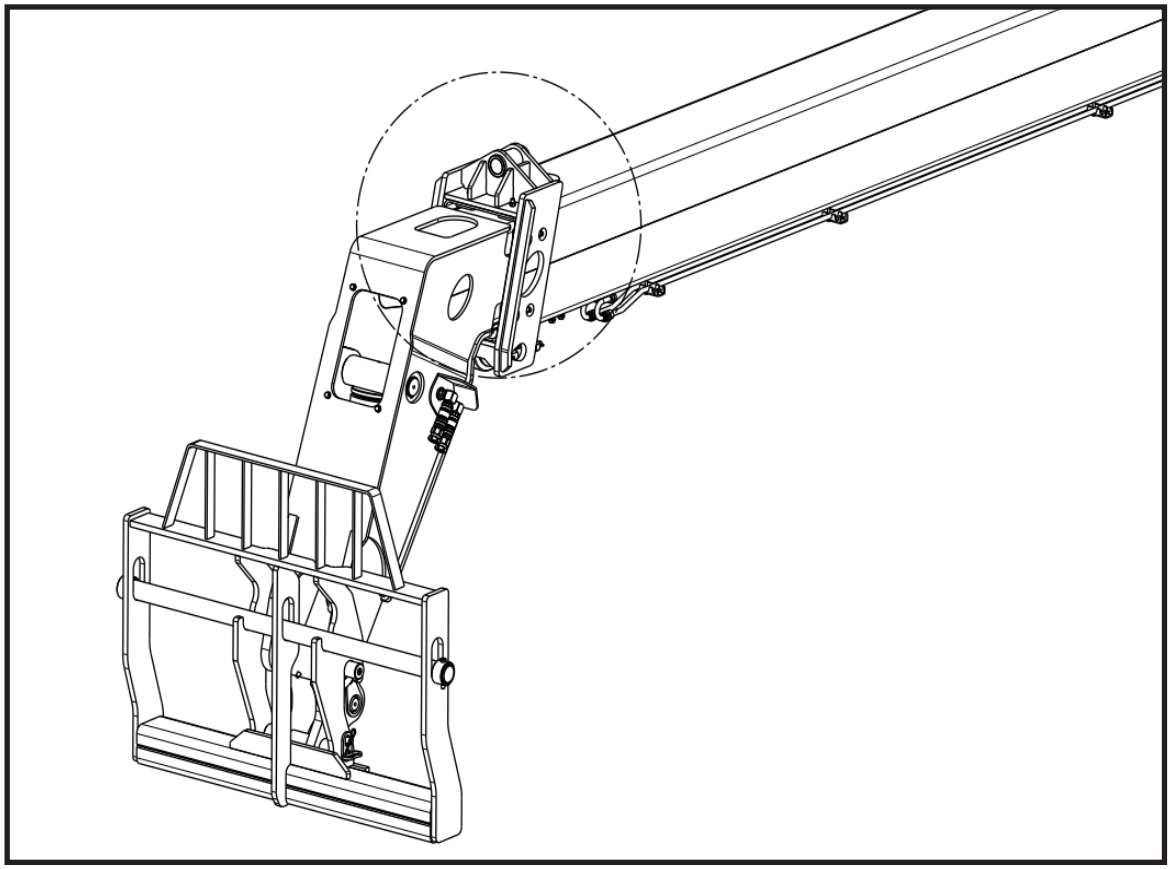

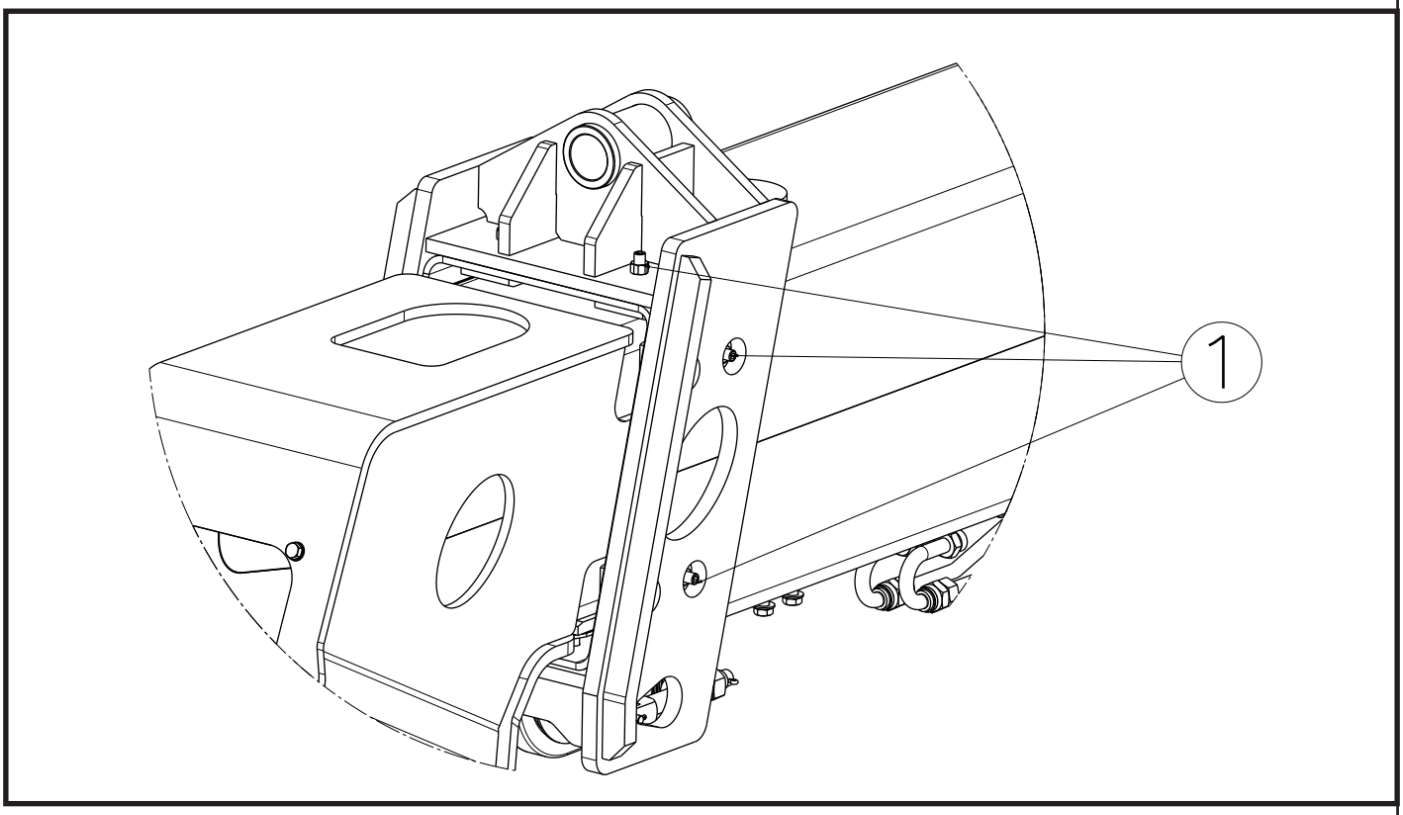

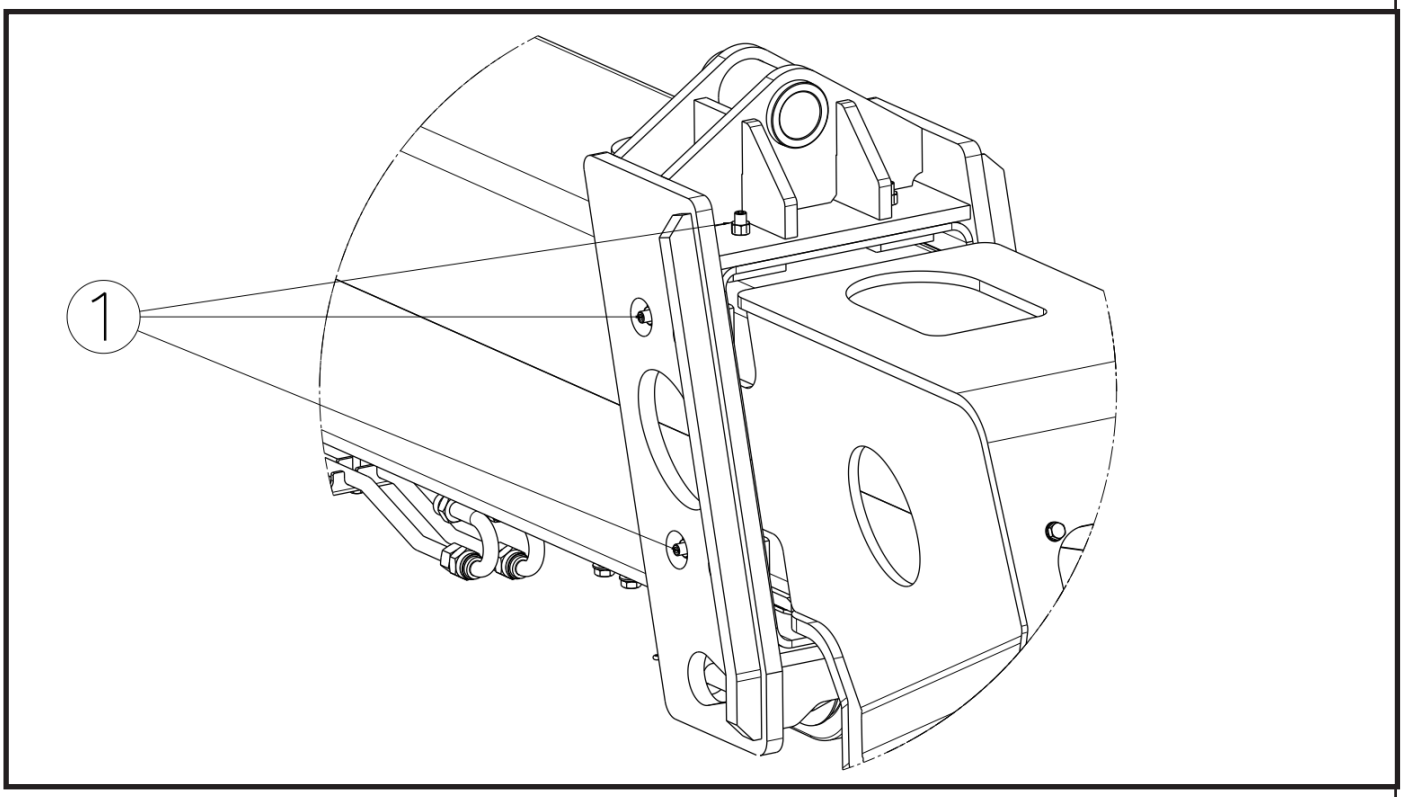

3. Secure the First Boom and pull out the Second boom

Tilt Cylinder Replacement
Removal

1. Park the machine on a hard, level surface, fully retract the boom, raise the boom assembly to access lift/lower cylinder pin and the compensation cylinder pin, place the transmission in (N) NEUTRAL, engage the park brake and shut the engine OFF.
2. Place a Do Not Operate Tag on both the ignition key switch and the steering wheel.
3. Properly Drain Hydraulic oil system. *Refer to Section — Hydraulic Tank Replacement*, for detailed instructions.
4. Allow the system fluids to cool.
5. Properly disconnect the battery. *Refer to Section — Battery*, for procedure.

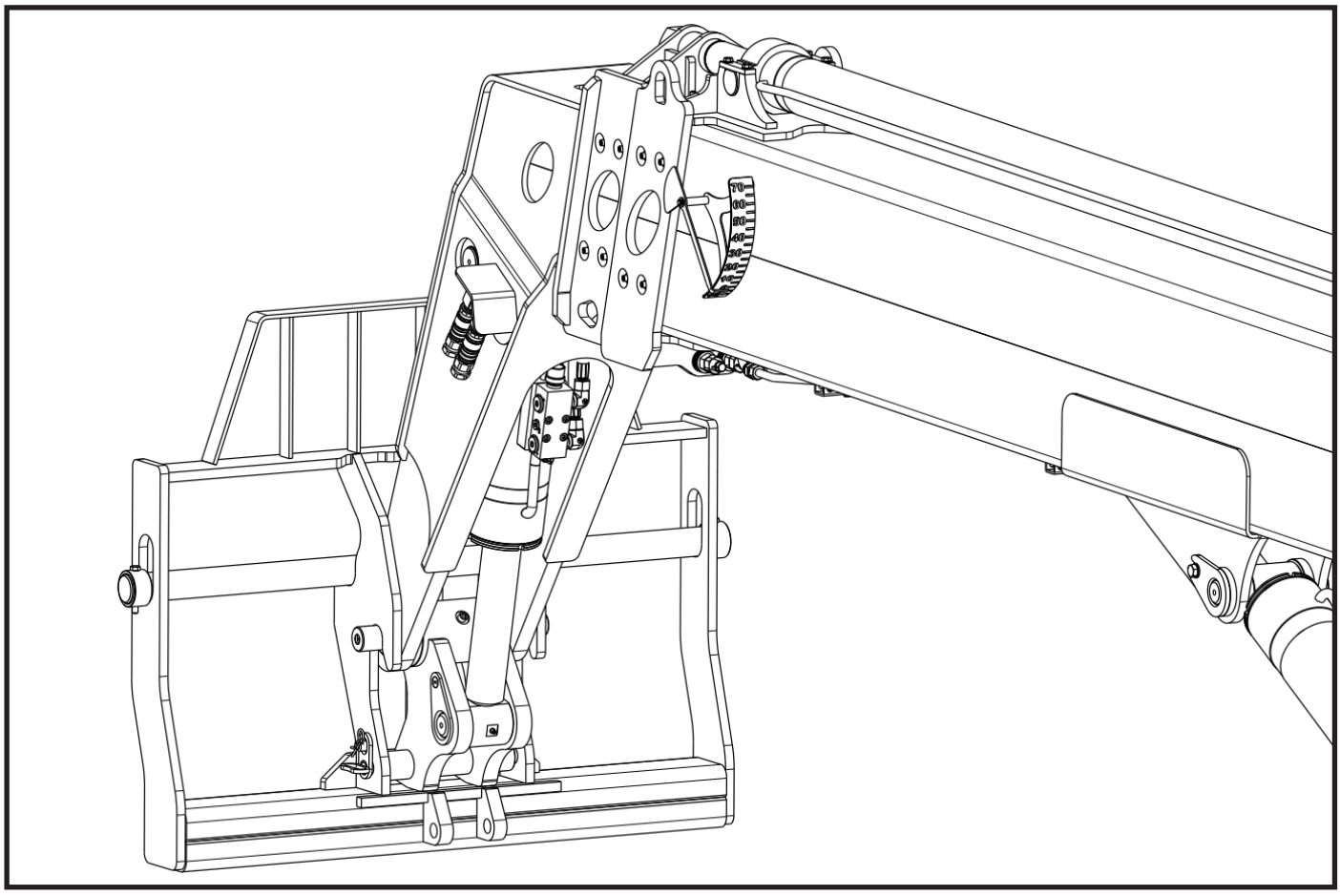

6. Loosen and remove the hydraulic hoses (**1**) on the valve.

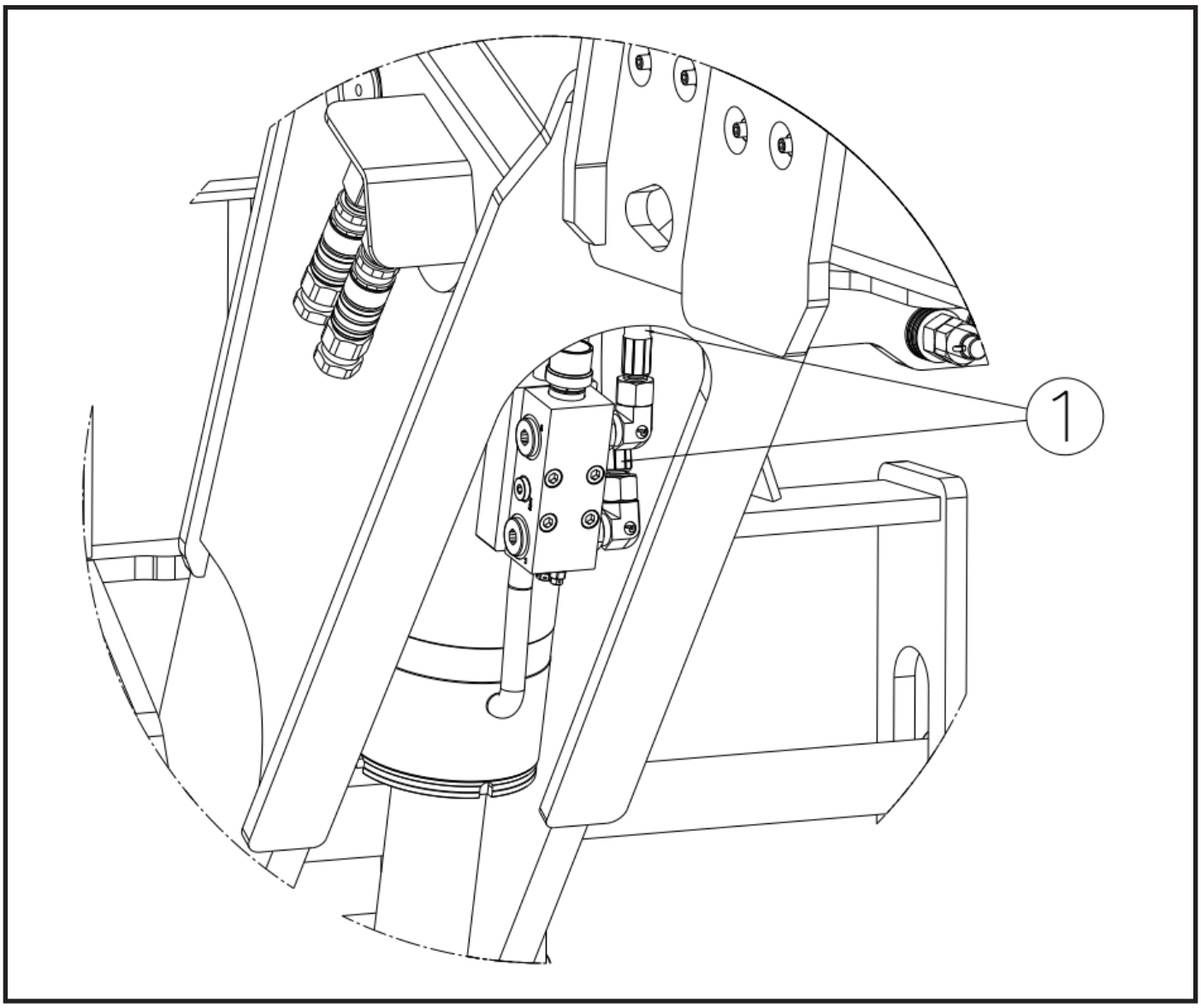

8. Remove the pins (**2**).

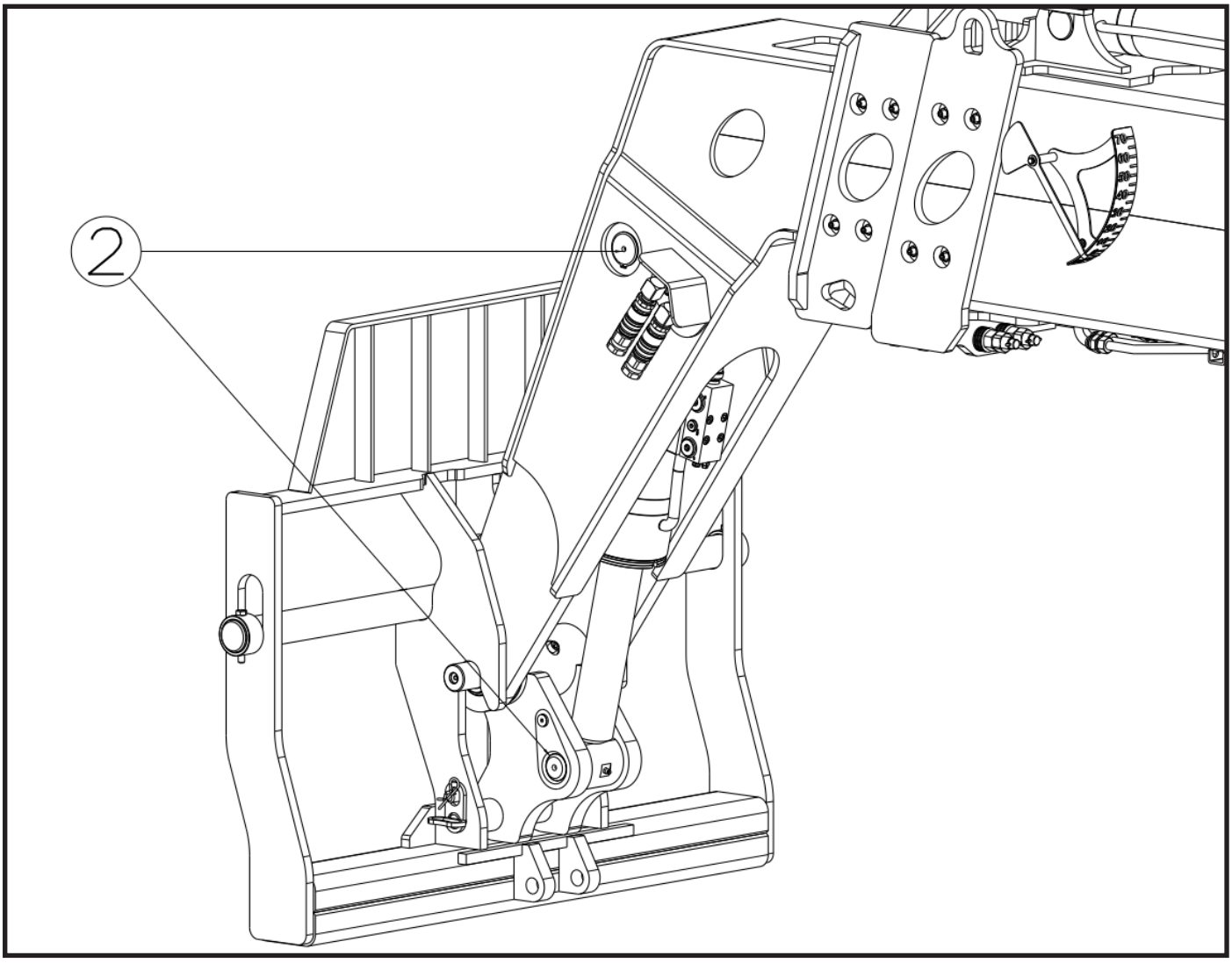

9. Remove the Tilt Cylinder.

12.SCHEMATICS

12.1.Electrical Schemas

TH - 842 - TH-944 – TH-1044 - TH-1056 - TH-1256

12.2.Hydraulic Schemas

TH-842, TH-944
TH-1044, TH-1056, TH-1256

- **Hydraulic and Electrical Schemas given following pages**

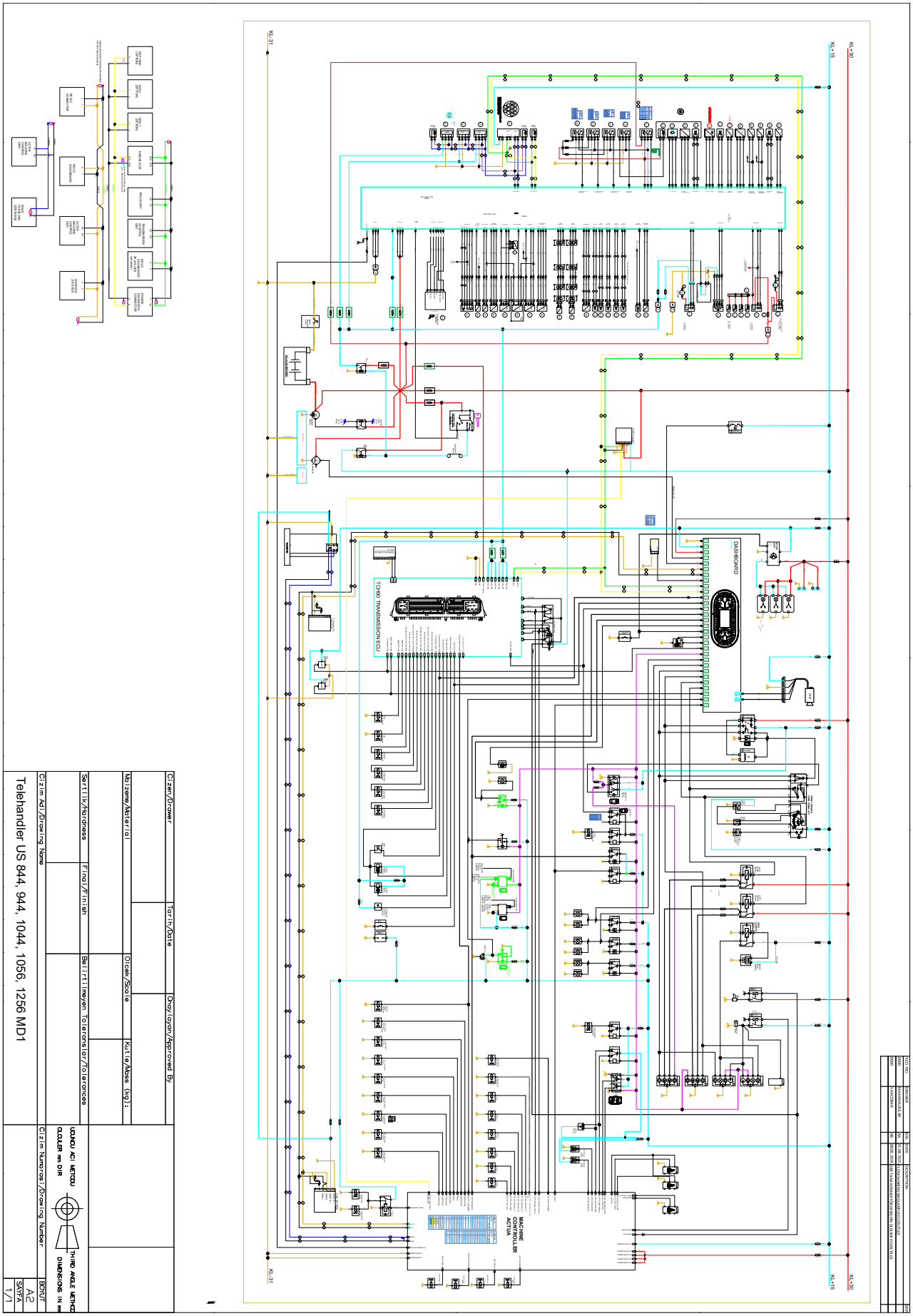
Telehandler US 844, 944, 1044, 1056, 1256 MD1
DASHBOARD
TORQ TRANSMISSION ECU
MACHINE CONTROLLER ACTIA
THIRD ANGLE METHOD
DIMENSIONS IN mm
A2
SAYFA 1/1

12.2.Hydraulic Schemas

TH-842 – TH-944

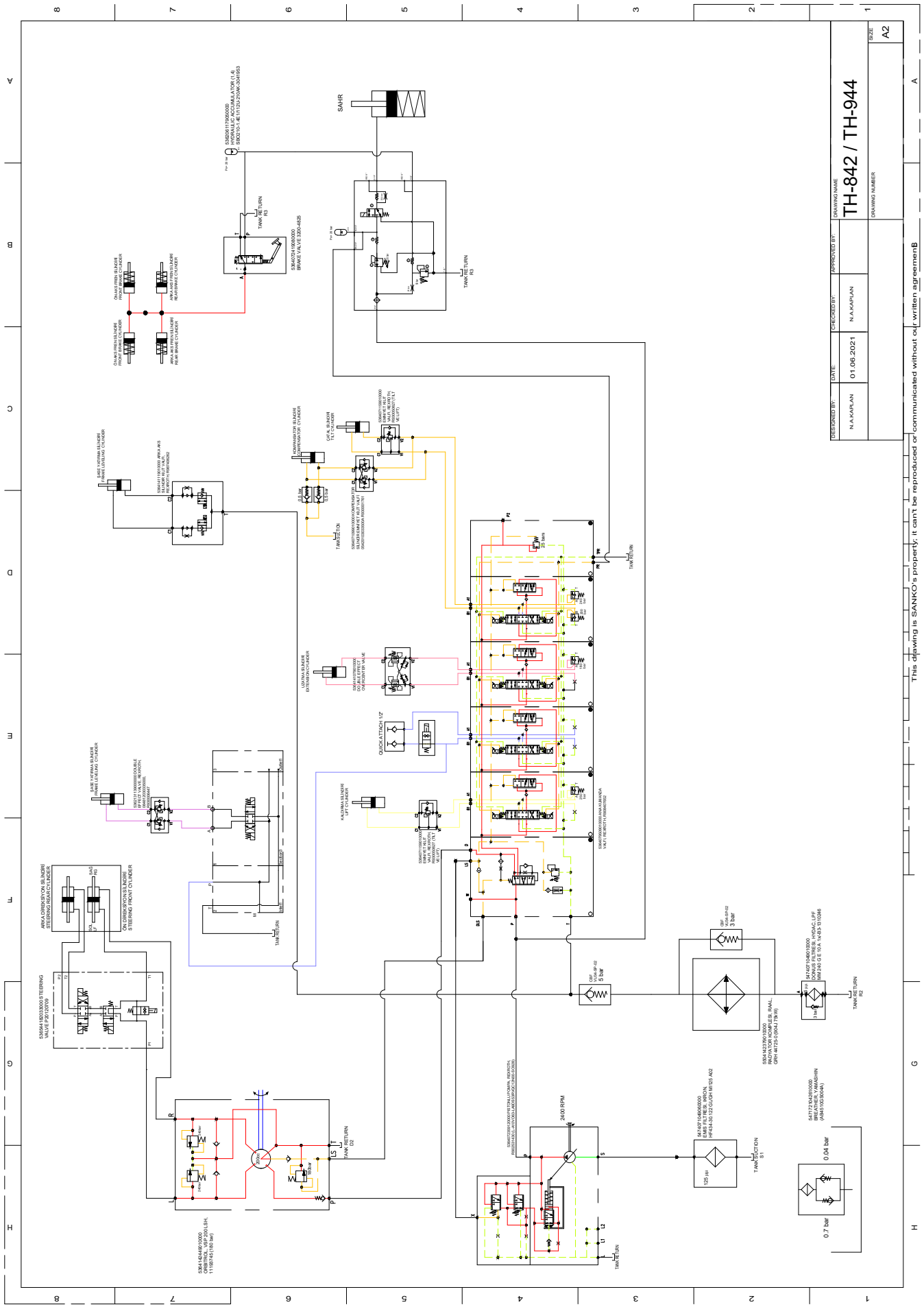

TH-1044

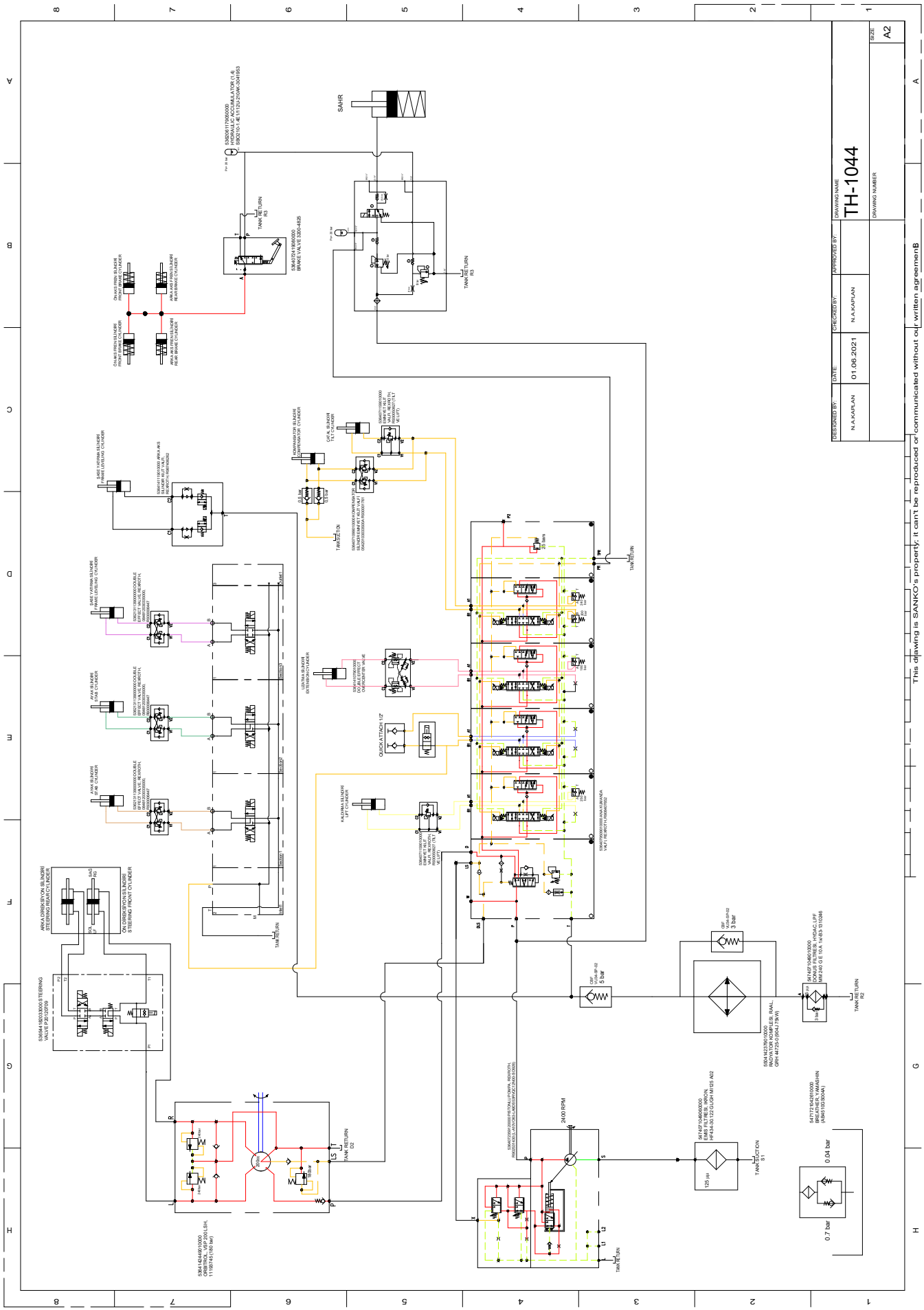

TH-1044
DRAWING NAME
DRAWING NUMBER
SIZE
A2
DESIGNED BY:
N.A.KAPLAN
DATE:
01.06.2021
CHECKED BY:
N.A.KAPLAN
APPROVED BY:
This drawing is SANKO's property; it can't be reproduced or communicated without our written agreement
SAHR
TANK RETURN
24.00 RPM
0.04 bar
0.7 bar

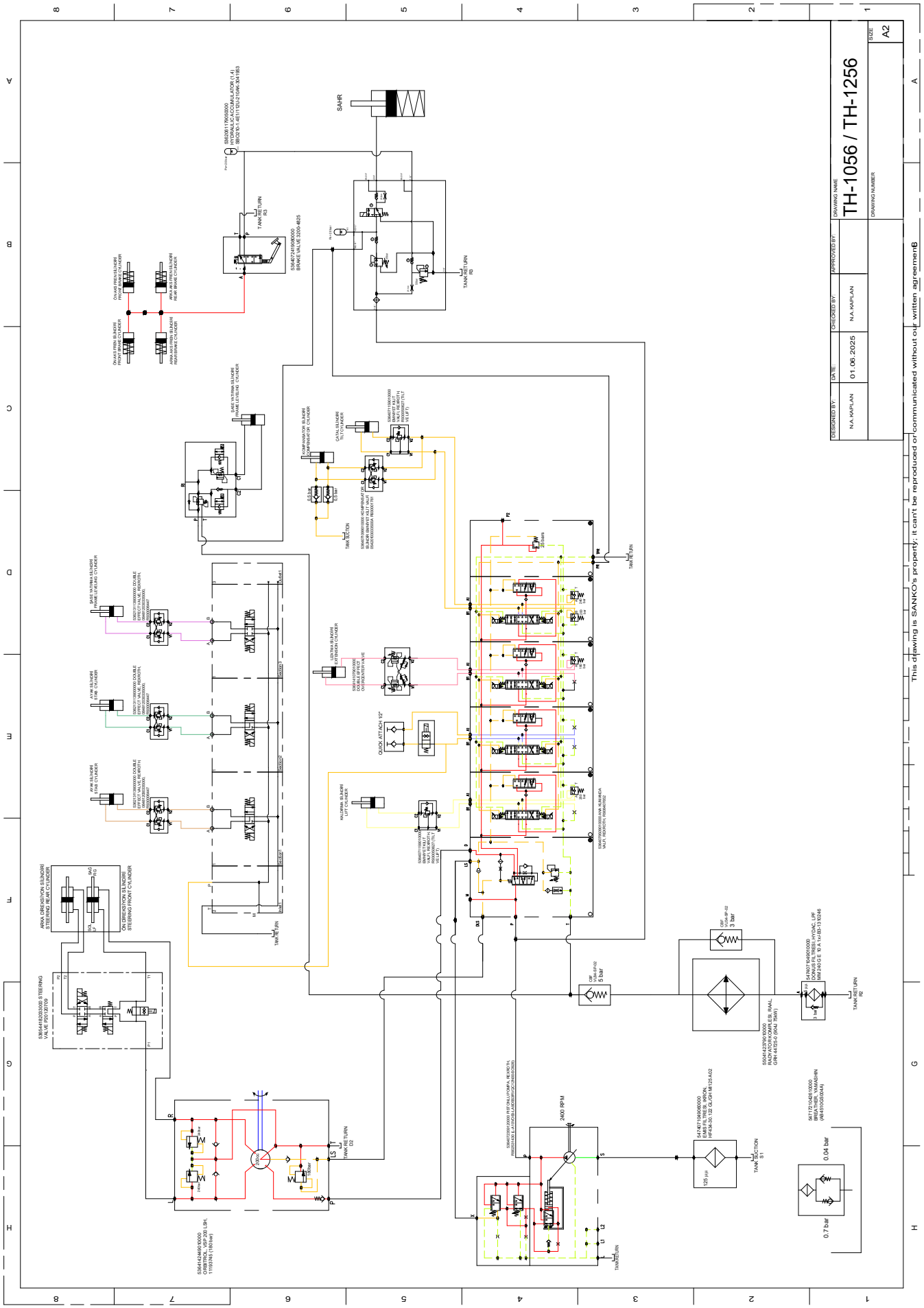
TH-1056 / TH-1256
DRAWING NAME
DRAWING NUMBER
SIZE
A2
DESIGNED BY
N.A KAPLAN
DATE
01.06.2025
CHECKED BY
N.A KAPLAN
APPROVED BY
This drawing is SANKO's property; it can't be reproduced or communicated without our written agreement
SAHR
TANK RETURN
TANK SUCTION
2400 RPM
0.04 bar
0.7 bar
3 bar
5 bar

AXCS EQUIPMENT

Telehandler Service Manual

©2026 AXCS Equipment all rights reserved.