HY-BRID LIFTS™

BY CUSTOM EQUIPMENT LLC

OPERATIONS & SAFETY MANUAL

SELF-PROPELLED AERIAL WORK PLATFORM

SUPO-677
REV B

HB-1230

SERIES III

NOTES

If there is a question about application and/or operation, contact:

Custom Equipment, LLC
2647 Hwy 175
Richfield, WI 53076
U.S.A.
P: +1-262-644-1300
F: +1-262-644-1320
www.hybridlifts.com

Original instructions are written in English.

The purpose of this Operations and Safety manual is to provide users with the instructions and operating procedures essential to properly and safely operate the Custom Equipment Hy-Brid Lift for its intended purpose, and to position personnel and their necessary tools and materials.

DANGER

THE OPERATION AND SAFETY MANUAL MUST BE READ AND UNDERSTOOD PRIOR TO OPERATING THE MACHINE.

- The user/operator should not accept operating responsibility until the manual has been read and understood as well as having operated the lift under supervision of an experienced and qualified operator.
- Because the manufacturer has no direct control over machine application and operation, proper safety practices are the responsibility of the user and all operating personnel.

WARNING

ANY MODIFICATION ON THIS MACHINE WITHOUT THE EXPRESS WRITTEN CONSENT OF THE MANUFACTURER IS PROHIBITED.

Fall protection notice:
The guardrail system around the perimeter of the platform is the fall protection system for self-propelled elevating work platforms per the ANSI/SIA A92.6 Standard. It is prohibited to use an Aerial Work Platform manufactured by Custom Equipment, LLC, with any portion—or all—of the guardrails removed. Lanyard anchorage points on this type of equipment are not required to conform to the applicable standard. However, if anchorage points for lanyard attachments are required by site authorities or other regulations, the anchorage points on all equipment manufactured by Custom Equipment, LLC are recommended to be used for work positioning restraints of personnel only. Lanyard lengths are to be determined by operator/owner to restrict the operator to the confines within the guardrail system.

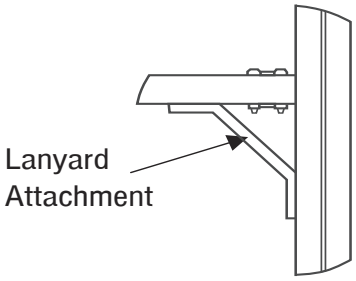

WARNING

USE OF FALL ARREST SYSTEMS ATTACHED TO ANCHORAGE POINTS ON EQUIPMENT MAY CAUSE MACHINE TO TIP, RESULTING IN SERIOUS INJURY OR DEATH.

TABLE OF CONTENTS

NOTES **2**
FOREWORD **3**
TABLE OF CONTENTS **4**
INDEX OF FIGURES **5**
SECTION 1 | SAFETY **6**
1.1 | SAFETY SYMBOLS 6
1.2 | GENERAL RULES AND PRECAUTIONS 6
1.3 | SAFETY FEATURES 7
1.4 | SAFETY INDICATORS & INTERLOCKS 7
1.5 | SAFETY CONTROLS 8
1.6 | MAINTENANCE LOCK 9
1.7 | SAFETY GUIDELINES 9
SECTION 2 | PRODUCT DESCRIPTION **12**
2.1 | GENERAL 12
SECTION 3 | DECALS **14**
3.1 | DECAL LOCATION 14
3.2 | DECAL DESCRIPTIONS 15
3.3 | DECAL SYMBOLS 16
SECTION 4 | TRANSPORT, HANDLING & STORAGE **19**
4.1 | PRELIMINARY UNPACKING INSTRUCTIONS AND DEALER INSPECTION 19
4.2 | STORAGE 19
4.3 | PREPARATION FOR TRANSPORT 19
4.4 | LIFTING AND TIE-DOWN POINTS 20
4.5 | FORK LIFT POCKETS 21
SECTION 5 | OPERATION **22**
5.1 | BEFORE YOU OPERATE 22
5.2 | STARTUP/SHUT DOWN 23
5.3 | ERROR ALARMS 24
5.4 | DRIVING AND STEERING 25
5.5 | ELEVATING AND LOWERING 26
5.6 | EXTENDING THE PLATFORM 26
5.7 | DAILY MAINTENANCE 27
5.8 | CHARGING THE BATTERY 27
5.9| BATTERY DISPLAYS 28
SECTION 6 | PRE-START INSPECTION **30**
6.1 | PRE-START INSPECTION CHECKLIST 30

INDEX OF FIGURES

FIGURE 1: Pothole Guard 7
FIGURE 2: Emergency Lowering 8
FIGURE 3: Down Instruction 8
FIGURE 4: Maintenance Lock Storage 9
FIGURE 5: Maintenance Lock Use 9
FIGURE 6: Decal Locations 14
FIGURE 7: Caster Lock 19
FIGURE 8: Caster Lock In Use 19
FIGURE 9: Brake Release Handle Location 20
FIGURE 10: Tie-Down Points, Rear 20
FIGURE 11: Tie-Down Points, Front 20
FIGURE 12: Fork Pockets 21
FIGURE 13: Center of Gravity 21
FIGURE 14: Base Controls 22
FIGURE 15: Platform Controls 22
FIGURE 16: Main Power Switch 23
FIGURE 17: Main Power Switch Off 23
FIGURE 18: Main Power Switch Knob Removed 23
FIGURE 19: Secure Location 23
FIGURE 20: Slide Lock Handle 26
FIGURE 21: Battery Charger LED Display 28

Revisions:

Revision A: Initial Release ..... DECEMBER 2014
Revision B: Reference #2263 ..... APRIL 2014

SECTION 1 | SAFETY

1.1 | SAFETY SYMBOLS

DANGER

FAILURE TO FOLLOW THIS WARNING WILL CAUSE DEATH OR PERSONAL INJURY.

"DANGER" indicates an imminently hazardous situation, which, if not avoided, will result in death or serious injury.

WARNING

FAILURE TO FOLLOW THIS WARNING MAY CAUSE DEATH OR PERSONAL INJURY.

"WARNING" indicates a potentially hazardous situation, which, if not avoided, could result in death or serious injury

CAUTION

FAILURE TO FOLLOW THIS WARNING MAY CAUSE INJURY OR DAMAGE TO EQUIPMENT.

"CAUTION" indicates a potentially hazardous situation which, if not avoided, could result in minor or moderate injury or damage to equipment

1.2 | GENERAL RULES AND PRECAUTIONS

An operator of any type of work platform is subject to certain hazards that cannot be protected by mechanical means. It is therefore essential that operators be competent, careful, physically and mentally fit and thoroughly trained in safe operation of this machine.

Although Custom Equipment, LLC conforms to specified ANSI & OSHA, it is the responsibility of the owner to instruct operators with the safety requirements made not only by Custom Equipment, LLC, but by the various safety boards in your area, as well as additional requirements set forth by ANSI and OSHA. If you come across a situation that you think might be unsafe, stop the platform and request further information from qualified sources before proceeding.

WARNING

NEVER REACH BETWEEN SCISSORS LINKS OR PROP UP PLATFORM. STEERING BRACKETS EXTENDING BEYOND THE SIDES OF THE BASE MAY OCCUR IN TIGHT TURNING SITUATIONS.

Potential damage to walls, etc., may occur in tight turning situations due to the steering brackets extending beyond the sides of the base.

1.3 | SAFETY FEATURES

- Puncture-proof Wheels.
- Guardrails—43.5 in (1.1 m) height with 6 in (15 cm) kick plates.
- Non-slip Deck.
- Entrance Gate.
- Automatic Parking Brake.
- Free Descent Protection. A velocity fuse is installed in the hydraulic circuit to prevent the platform from descending in case of a ruptured hydraulic hose. The platform is hydraulically locked until hose has been replaced.
- Decals: Danger, Caution, and Warning decals are displayed at various locations on this unit.
- Key Switch Security. A key switch is required to prevent unauthorized use.

1.4 | SAFETY INDICATORS & INTERLOCKS

Tilt Alarm
An audible alarm sounds when the machine is tilted more than 2° longitudinally or 1.5° laterally. Elevating and driving functions are inhibited. Lower the platform and move to a level surface.

Descent/Motion Alarm
An audible alarm sounds when the machine is lowering. Some models also sound an alarm when the machine is elevating or driving.

Slope Alarm
An audible alarm sounds when the stowed machine is on a ramp. Put the caster lock pins in place before continuing. See the "Transport and Handling" section of this manual for more detail on the caster locks.

Pothole Protection
Pothole guards are required to be in place when the lift is in the elevated position. If the guards are blocked or not functioning properly, elevating functions will be inhibited. Lower the machine and do not operate until the problem is repaired or the obstruction is removed.

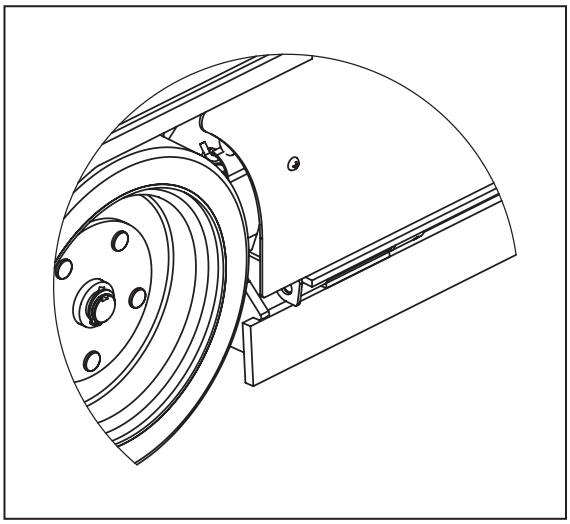

FIGURE 1: Pothole Guard

1.5 | SAFETY CONTROLS

Descent - Manual Override
For manually lowering the scissors, a manual valve on the cylinder is provided. To lower the scissors, pull the cable located near the rear or the machine.

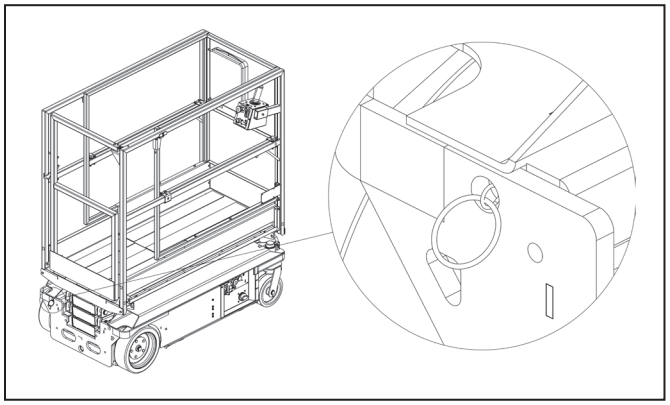

FIGURE 2: Emergency Lowering

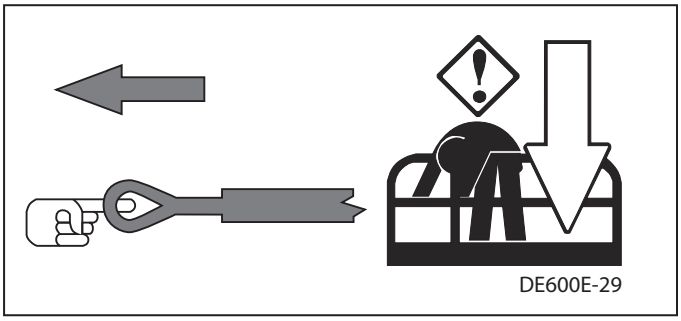

FIGURE 3: Down Instruction

WARNING

IF PLATFORM SHOULD FAIL TO LOWER, DO NOT ATTEMPT TO CLIMB DOWN THE BEAM ASSEMBLY. SERIOUS INJURY MAY RESULT. HAVE AN EXPERIENCED OPERATOR USE THE EMERGENCY LOWERING PROCEDURE TO SAFELY LOWER THE PLATFORM.

WARNING

BEFORE LOWERING PLATFORM, RETRACT THE DECK EXTENSION.

Emergency Stop
This lift is equipped with two emergency stop switches, one at the platform control and one at the base control, that when activated, will render the unit inoperable until reset. To reset, pull the button out.

WARNING

PUSHING THE EMERGENCY STOP BUTTON WILL APPLY BRAKES IMMEDIATELY. THIS MAY CAUSE UNEXPECTED PLATFORM MOVEMENT AS THE MACHINE COMES TO A SUDDEN STOP. BRACE YOURSELF AND SECURE OBJECTS ON THE PLATFORM DURING OPERATION OF THE MACHINE.

1.6 | MAINTENANCE LOCK

The maintenance lock pins must be placed into position whenever the machine is being serviced in the raised or partially raised position. Serious injury and/or death could result if maintenance lock is not used properly.

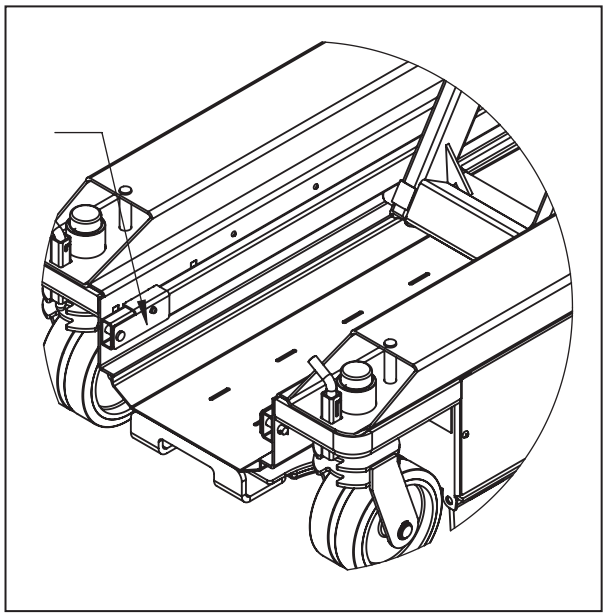

FIGURE 4: Maintenance Lock Storage

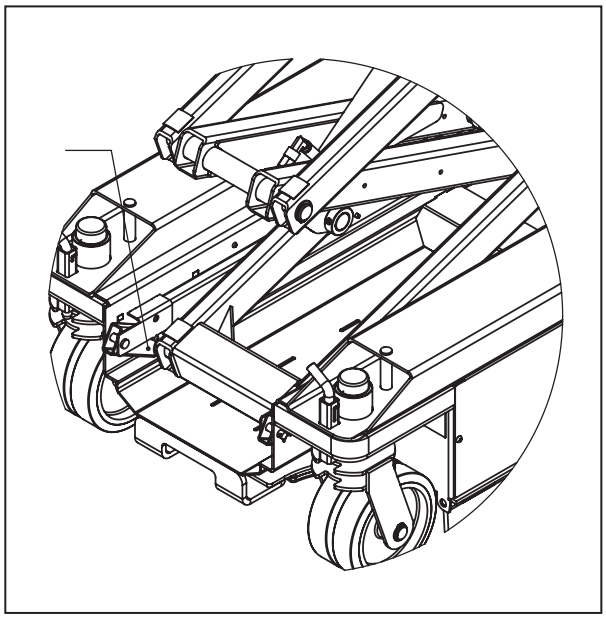

FIGURE 5: Maintenance Lock Use

1.7 | SAFETY GUIDELINES

Only qualified operators may operate this unit.

- All operators must read and understand the Operation and Safety Manual. They must understand all decals and warning labels on unit.
- Do not work on platform if your physical condition is such that you feel dizzy or unsteady in any way.
- Do not neglect/misuse machine. Report any misuse of equipment to proper personnel.
- Prevent unauthorized use; when unit is not in use, remove key.
- It is recommended all personnel on unit wear approved personal protective equipment (PPE), i.e. head gear.

Use machine only for purposes for which it was intended.

- Lift should never be used as a crane.
- Do not exceed the load capabilities of the platform.
- Distribute load evenly over platform floor area.
- Never use unit as electrical grounds for arc welding.
- Do not override any hydraulic, mechanical, or electrical safety devices.

Check job site for unsafe working conditions.

- Watch out for others. Keep others clear of operating platform. Never allow others to pass under a raised platform or position the platform over someone.
- Avoid contact with fixed objects (walls, buildings, or other machinery, etc) or moving vehicles (automobiles, cranes, etc).
- Follow any applicable national traffic regulations.
- Use indoors only. Lift is not designed for windy conditions or electrical storms.
- Unit must be on hard level surface before elevating. Do not operate on incline or uneven surface.
- You must maintain a clearance between any part of the machine, or its load, and any electrical line or apparatus. Follow local power line clearance regulations.

DANGER

DO NOT OPERATE MACHINE NEAR POWER LINES.
THE PLATFORM AND ENCLOSURES ARE NOT INSULATED.

Equipment is only as safe as the operator.

- Do not use ladders or scaffolding on the platform to obtain greater height.
- Do not enter or exit platform while machine is in motion.
- Never mount or dismount a raised platform.
- Make sure entry gate is secured before operating machine from the platform.
- Never belt or tie off to an adjacent structure.
- Secure tools and materials.
- Personnel must maintain a firm footing on the platform floor and work only within the platform area.
- It is recommended to avoid sudden braking or steering. Go slowly and leave more maneuvering room during cold weather operation

Before operation, ensure that the machine is properly serviced.

- Do not use machine if it is not working properly.
- Make sure platform rails and pins are secured.
- Operator shall use the maintenance lock when performing all types of maintenance procedures.
- Do not smoke while charging the battery.

THIS PAGE WAS INTENTIONALLY LEFT BLANK

SECTION 2 | PRODUCT DESCRIPTION

2.1 | GENERAL

Custom Equipment's Hy-Brid Lifts are aerial work platforms designed to be safe and reliable. The purpose of the machine is to elevate personnel, along with their necessary tools and materials to overhead work locations.

Manufacturer approval is required for any use other than the intended use.

Before operation, the operator must read and understand the manufacturer's operating instructions and user's safety rules, or have them explained, understand all labels, warnings, and instructions displayed on the aerial platform or have them explained, ensure that all occupant of the aerial platform wear appropriate protective equipment for the conditions, including the environment in which the aerial platform will be operated.

The operator must inspect the workplace for environmental hazards such as, but not limited to drop-offs, holes, slopes, debris, floor or overhead obstructions, surface, wind and weather conditions, or presence of unauthorized persons. Vibration does not create significant hazards on this machine.

	HB-1230 S3	
Working Height (maximum)	18 ft	5.49 m
Platform Height (maximum)	12 ft	3.66 m
Stowed Height	64.0 in	1.63 m
Ground Clearance (Pothole Guard Stowed)	2.86 in	7.3 cm
Ground Clearance (Pothole Guard Engaged)	0.53 in	1.3 cm
Overall Width	28.75 in	0.73 m
Overall Length	56.0 in	1.42 m
Platform (Retracted, Inside)	25.5 in x 53 in	0.65 m x 1.35 m
Slide-Out Deck Length	28.75 in	0.73 m
Guard Rail Height	43.3 in	1.1 m
Platform Entrance	20 in	0.51 m
Step Height	N/A	N/A
Wheel Base	46 in	1.17 m
Wheel Track	24 in	0.62 m
Turning Radius (Inside)	Zero	
Tire Size (Solid, Non-Marking) - Front / Rear	8 in / 12 in	20.3 cm / 30.5 cm
RATED LOAD		
Lift Capacity (Evenly Distributed):	550lb / 2 Persons	249.5 kg / 2 Persons
Slide-Out Deck Capacity	250 lb / 1 Person	113.4 kg / 1 Person
Horizontal/Manual Force	100 lb	447 N
FLOOR LOADING		
*Machine Weight (Unloaded) (Approx.)	1610 lb	730 kg
*Minimum Wheel Load-Contact Pressure	102.7 psi	707.8 kPa
*Maximum Wheel Load-Contact Pressure	137.7 psi	949.6 kPa
*Minimum Machine Loading-Floor Pressure	138.0 PSF	6.6 kPa
*Maximum Machine Loading-Floor Pressure	185.0 PSF	8.9 kPa

ENVIRONMENTAL LIMITATIONS		
Wind	No Windy Conditions/Indoor Use Only	
Rated Slope	Level Surface	
Tilt Sensor Activated	2° Longidudinal/1.5° Lateral	
Gradeability (Stowed Position)	25% (14°) Unloaded	
Temperature	-4°F to 104°F	-20°C to 40°C
Vibration	8.2 ft/s^2 max	2.5 m/s^2 max
Sound - Normal Use, Alarms	86 dB, 100 dB	86 dB, 100 dB

POWER SYSTEMS - Drive System (Proportional Electric):		
Drive Speed (Platform Elevated)	0-0.75 mph proportional	0-.34 m/s proportional
Drive Speed (Platform Lowered)	0-2.2 mph	0-1 m/s
Lift/Lower Speed	18 s (proportional) /22s	
Hydraulic Pressure (max)	1000 psi	6895 kPa
Hydraulic Fluid Capacity	1 gal	3.55 L
Power System-Voltage	24V DC	24V DC
Batteries-Deep Cycle Marine	(2) 12V Group 27 AGM	(2) 12V Group 27 AGM

*Note: Weight specification for Serial Numbers D08-20066 through D08-29999 :

Machine Weight (Unloaded) (Approx.)	1689 lb	766 kg
Minimum Wheel Load-Contact Pressure	138.4 psi	954.0 kPa
Maximum Wheel Load-Contact Pressure	183.4 psi	1264.8 kPa
Minimum Machine Loading-Floor Pressure	144.7 PSF	6.93 kPa
Maximum Machine Loading-Floor Pressure	191.8 PSF	9.18 kPa

3.1 | DECAL LOCATION

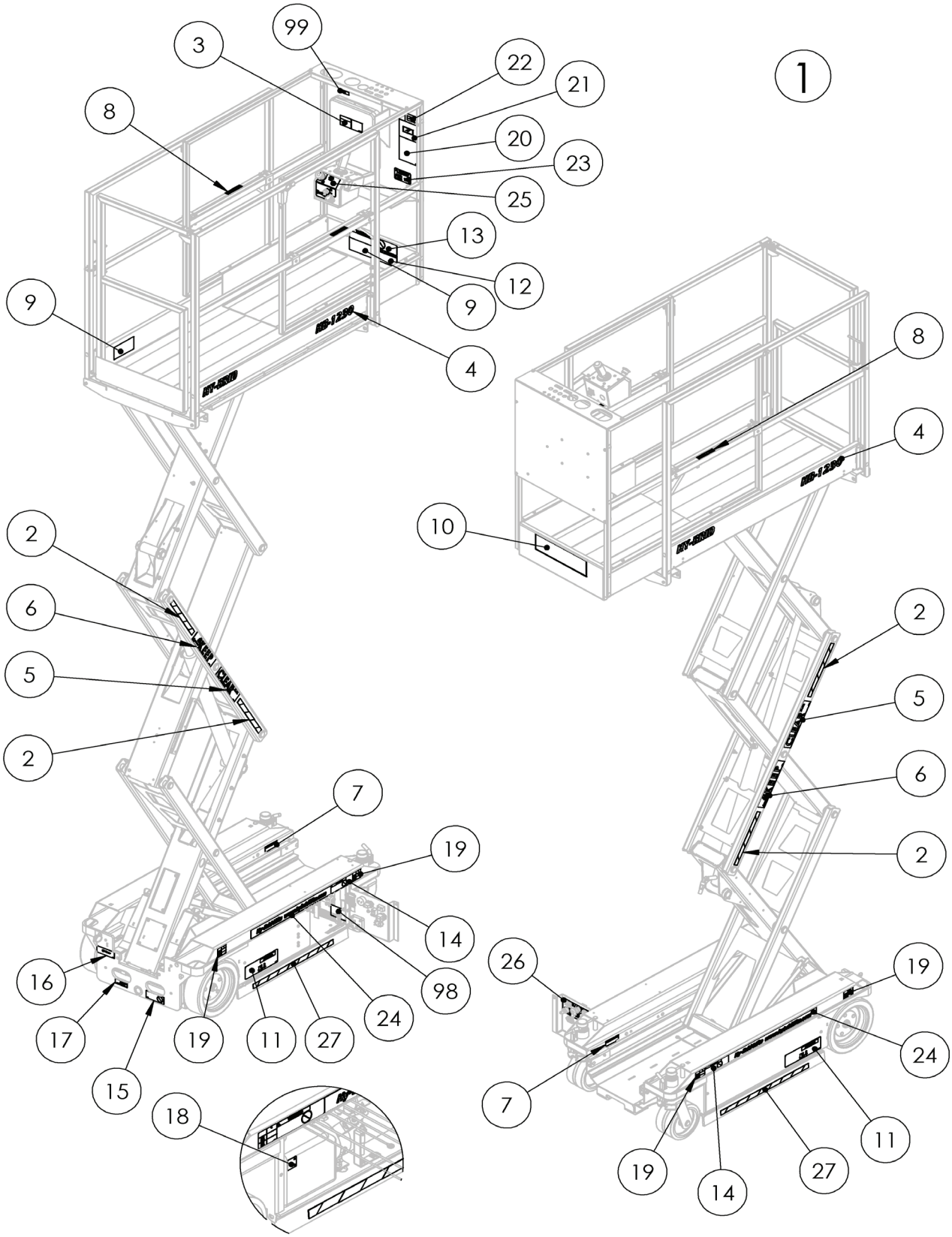

FIGURE 6: Decal Locations

3.2 | DECAL DESCRIPTIONS

ITEM #	PART #	DECAL MEANING OR DESIGNATION	QTY.
2	129-21-212-50-K	DECALS,HB-1230 S2 ANSI	1
2	129-21-312-50-K	DECALS,HB-1230 S3 ANSI	1
3	DE717-62	DECAL,SAFETY STRIPE (12.00)	4
4	DE600E-10	DECAL,MANUAL BOX	1
5	DE652	DECAL,WEBSITE	2
6	DE603-6	MODEL# DECAL-HB-1230	2
7	DE708	DECAL,CLEAR	2
8	DE707	DECAL,KEEP	2
9	DE600E-14	DECAL,MAINT LOCK	2
10	DE746	DECAL,LANYARD ATTACHMENT	2
11	DE717-61	DECAL,SAFETY STRIPE (24.00)	2
12	DE712	DECAL,CAPACITY,550#,2P,I,W/SO	2
13	DE601	DECAL,LOGO HY-BRID	1
14	DE709	DECAL, LWR	2
15	DE706	DECAL,UPR HB	1
16	DE719	DECAL,CASTERLOCK	1
17	DE721	DECAL,CASTERLOCK	2
18	DE747	DECAL,BRAKE RELEASE/NO TOW	1
19	DE751	DECAL,E-DOWN CABLE	1
20	DE753	DECAL,CHARGER CORD	1
21	DE679	DECAL,HYDR FLUID	1
22	DE765	DECAL,WHEEL LOAD HB-1230 S3	4
22	DE748	DECAL,WHEEL LOAD HB-1230 S2	4
24	DE755	DECAL,ERROR ALARMS	1
90	DE704	DECAL,CTL LWR	1
91	DE764	DECAL,CTL UPR	1
92	N/A	SERIAL NUMBER	0
93	N/A	SERIAL NUMBER REFERENCE	0

3.3 | DECAL SYMBOLS

- No Unauthorized Use
- Do not operate this machine unless you have been trained in safe operation.
- Training includes complete knowledge of the safety and operating instructions contained in the manufacturer's manual, your employer's work rules, and applicable government regulations.
- An untrained operator subjects himself and others to death or serious injury.

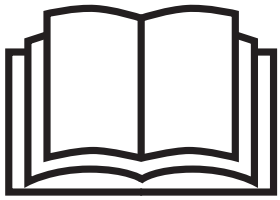

- Read and understand all dangers and warnings in the operator's manual before operating this machine.
- Improper use of this machine could cause death or serious injury.
- Inspect machine and make sure that it is operating properly, that all name plate and hazard signs are in place and legible, and that the machine is in accordance with the manufacturer's maintenance requirements contained in the operating and maintenance requirements contained in the operation and maintenance manual and the daily safety checklist.

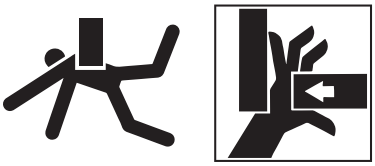

- Crushing Hazard
- Do not enter the space beneath the work platform or scissor structure unless the maintenance lock is in place.

- Refer to Maintenance Manual
- Only qualified service personnel may service the machine. Failure to comply with listed safety precautions may result in machine damage, personnel injury, or death.
- Replace designated items with manufacturer's specified equipment only. Failure to use these items may cause instability of platform.

- Batteries produce explosive gas. Only charge batteries in a well-ventilated area.
- Do not expose to sparks or flames.
- Do not smoke while charging battery.

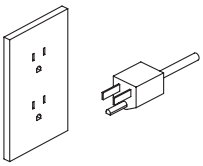

- Battery Charger Cord

- Tip Hazard

- Tip Hazard
- Do not elevate platform on an incline or step.

- Tip Hazard
- Do not elevate platform on a slope.

- Tip Hazard
- Do not elevate platform on uneven or soft surfaces.

- Indoor Use Only: No Wind Load

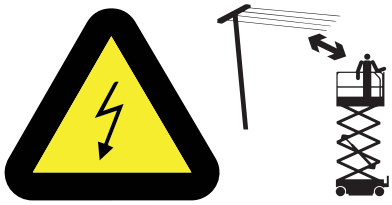

- Electrocution Hazard
- This machine is not insulated.
- Maintain safe clearance from electrical lines and apparatus. You must allow for machine sway, rock or sag and electrical lines swaying.
- This machine does not provide protection from contact with or proximity to an electrically charged conductor.
- You must maintain a clearance between any part of this machine or its load and any electrical apparatus. Follow local power line regulations.
- Death or serious injury will result from contact or inadequate clearance.

	• Brake Release
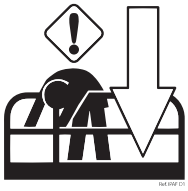	• Emergency Lowering
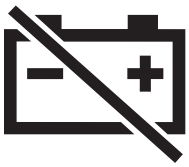	• Battery disconnect
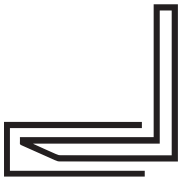	• Fork pocket
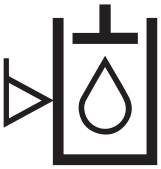	• Hydraulic oil level
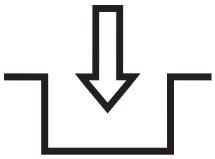	• Engaging mechanical Action: Enable Switch
	• Lanyard anchorage point location: Capacity 1 Person
	• Lanyard anchorage points are for work positioning restraints only, not for fall protection. • Use of fall arrest systems attached to anchorage points on mobile equipment may cause machine to tip, resulting in serious injury or death.

4.1 | PRELIMINARY UNPACKING INSTRUCTIONS AND DEALER INSPECTION

Maintenance locks must be engaged prior to inspecting or servicing the unit when the platform is elevated. Inspect machine for any possible damage during shipment; perform pre-delivery inspection. See checklist in the Maintenance Manual. Reset emergency stop switches, if necessary.

4.2 | STORAGE

After periods of storage or exposure to extremes of ambient conditions (heat, cold, moisture, dust etc.) inspect the machine. Refer to the Pre-Delivery/Frequent Inspection Checklist of the Maintenance Manual.

4.3 | PREPARATION FOR TRANSPORT

Lower the work platform to the down position. Bring the platform slide-out extension into the retracted position and lock in place. Turn the key switch to off position. Check the entire machine for loose or unsecured items. Remove any loose items from machine.

To limit caster swivel when loading or unloading, the caster lock pins should be used to lock the casters in the straight position.

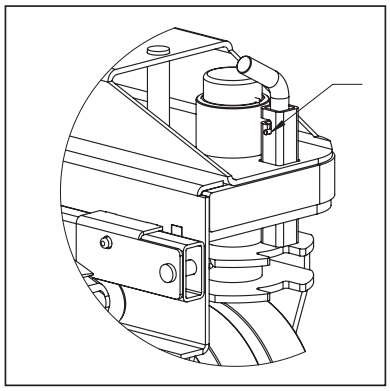

FIGURE 7: Caster Lock

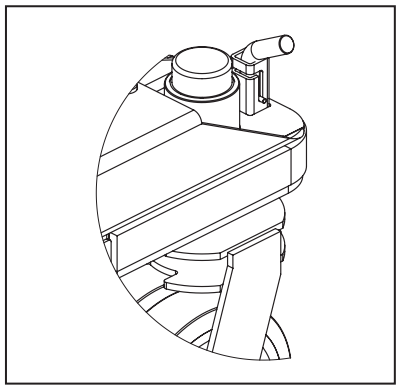

FIGURE 8: Caster Lock In Use

The machine can be pushed by releasing the parking brakes (one for each drive motor) at the rear of the machine. Pull both levers away from the floor. To resume normal operation, make sure both levers are down. Do not attempt to push or tow unit with the brakes applied. Do not push at speeds more than 0.9 m/s (2 mph). Severe gear damage will occur. Towing is not recommended.

NOTE: The drive system will not function if the parking brake is in the down release position.

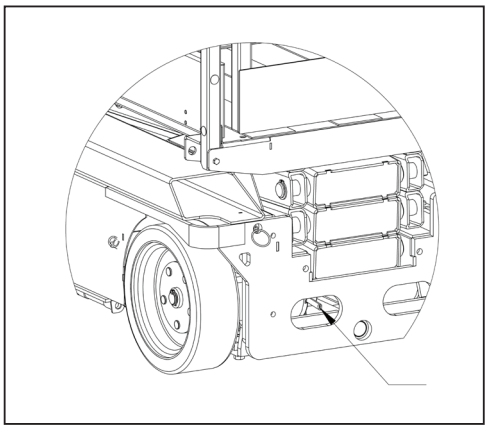

FIGURE 9: Brake Release Handle Location

4.4 | LIFTING AND TIE-DOWN POINTS

Tie-down points are provided for securing the machine on a trailer or truck bed for transport between places of use. They may also be used as lift points.

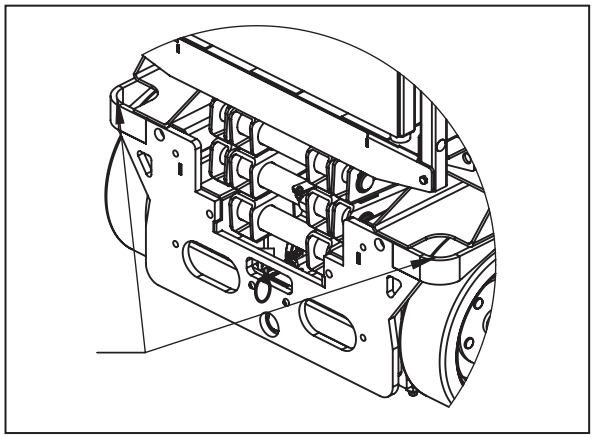

FIGURE 10: Tie-Down Points, Rear

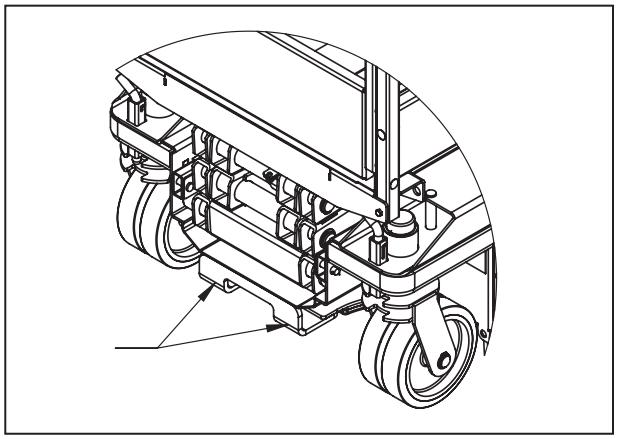

FIGURE 11: Tie-Down Points, Front

WARNING

DO NOT OVERLOAD BINDERS WHEN SECURING LOAD FOR TRANSPORT

4.5 | FORK LIFT POCKETS

Fork lift pockets are provided from the front and back of the unit for loading and unloading. A forklift from the side of the machine is not recommended. Do not use a forklift underneath the machine from the back. When moving machine with a forklift, do not let machine slide along floor. Bring forklift to a stop and then gently lower the machine.

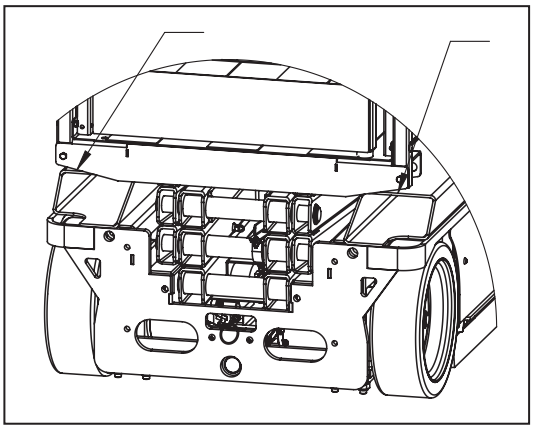

FIGURE 12: Fork Pockets

Center of gravity

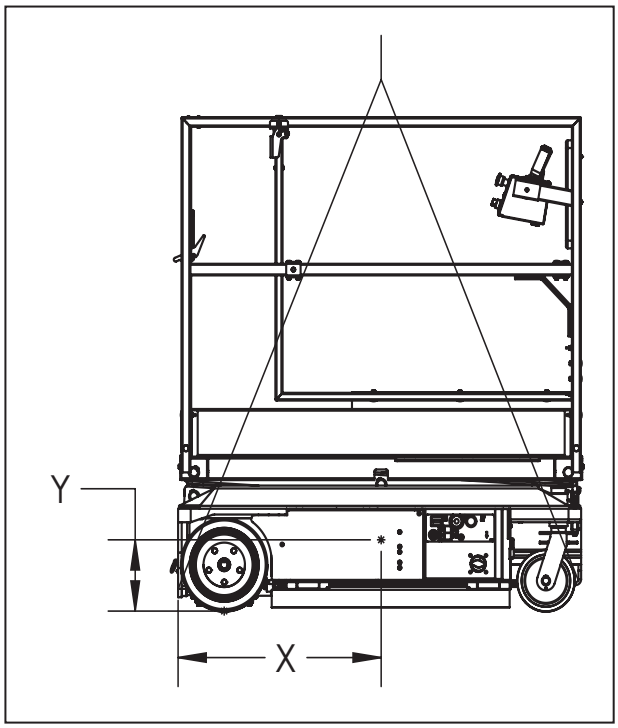

	X Axis	Y Axis
HB-1230	28 in (71 cm)	14 in (36 cm)

FIGURE 13: Center of Gravity

5.1 | BEFORE YOU OPERATE

Before use each day or at the beginning of each shift, the machine shall be given a visual inspection and functional test. Repairs (if any) must be made prior to operating the machine, as it is critical to ensure safe operation of the machine. A checklist for pre-start inspection can be found on page 30 of this manual.

Base Controls

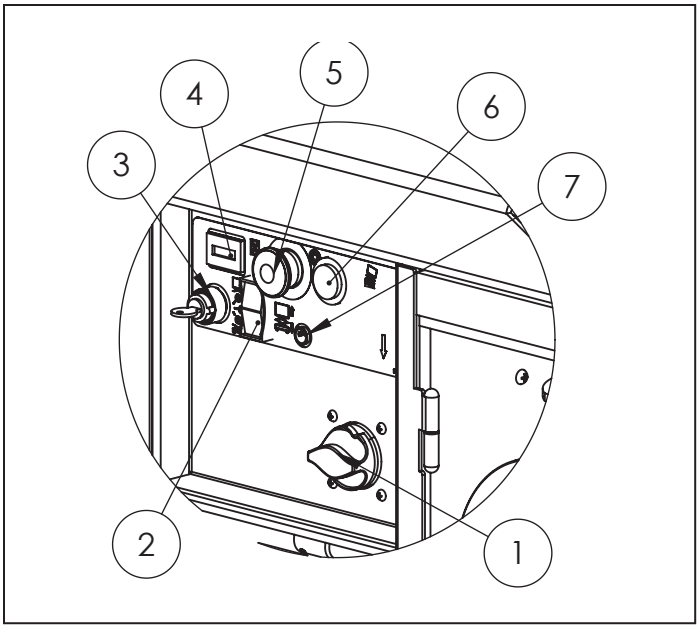

FIGURE 14: Base Controls

Item	Control/Indicator
1	Master Power Switch Operation described as follows
2	Up/Down Rocker Switch Operation described as follows
3	Key Switch Operation described as follows
4	Hour Meter Displays operation hours
5	Emergency Stop Operation described in Safety Controls
6	Beeper (Tilt/Descent Alarm) See Safety Indicators for more information
7	Diagnostic Light

Platform Controls

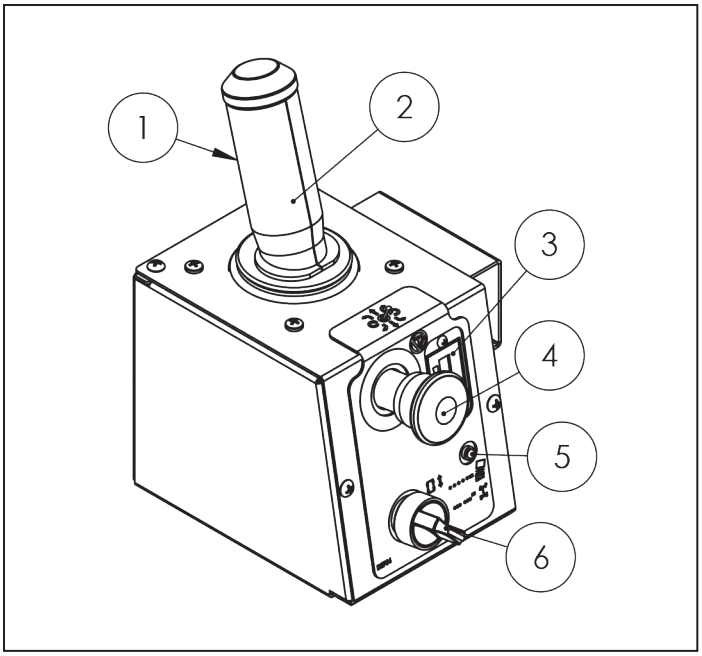

FIGURE 15: Platform Controls

Item	Control/Indicator
1	Drive Enable Trigger Operation described as follows
2	Joystick Operation described as follows
3	Battery Level Indicator
4	Emergency Stop Operation described in Safety Controls
5	Warning Light
6	Lift/Drive Mode Selection Switch Operation described as follows

5.2 | STARTUP/SHUT DOWN

WARNING

THE OPERATOR MUST BE AWARE OF THE ENVIRONMENT. DO NOT RAISE THE PLATFORM IF THE MACHINE IS NOT ON A FIRM, LEVEL SURFACE.

Operation Startup & Shutdown Practices

- Check that the work area is safe.
- Check that the Master Power Switch is in the "ON" position
- Ensure that the key in the lower control panel is in the "ON" position for the upper or lower controls. The key should be removed when to upper control location is selected to prevent unauthorized operation from the ground.
- Machine must be on a hard, level, surface before operation.
- Enter the work platform in the stowed position using the constant three point contact method.
- Follow all general rules and precautions stated in this manual
- When finished with the machine, place the platform in the stowed position.
- Park the machine on a level surface.
- Carefully exit the platform using the constant three point contact method.
  NEVER JUMP OFF PLATFORM.
- Remove key from lower control panel to prevent unauthorized use.
- The master power switch knob may be removed when in the isolated position and placed in a secure, padlockable location. (Ex. In the manual box)

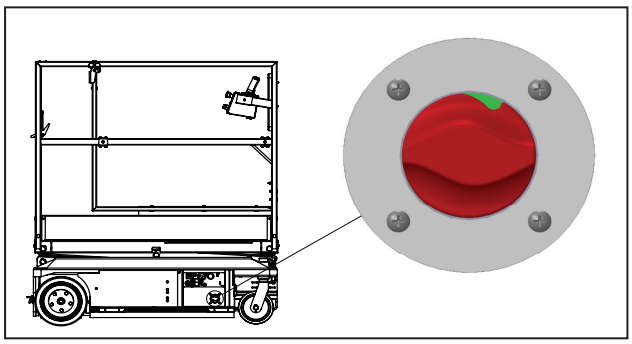

FIGURE 16: Main Power Switch

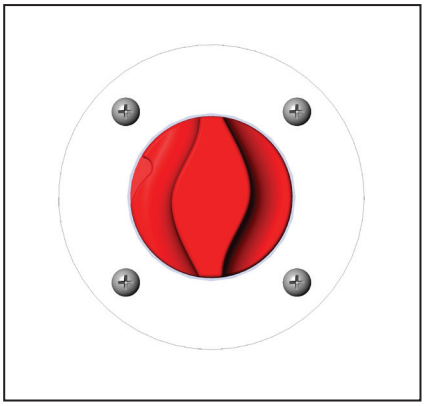

FIGURE 17: Main Power Switch Off

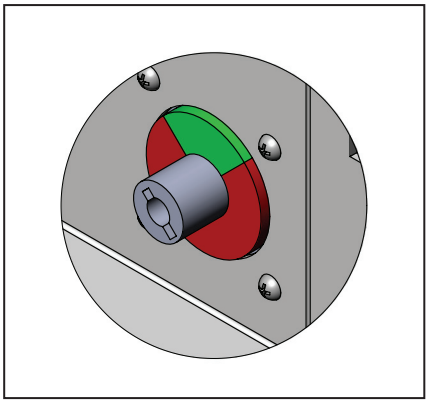

FIGURE 18: Main Power Switch Knob Removed

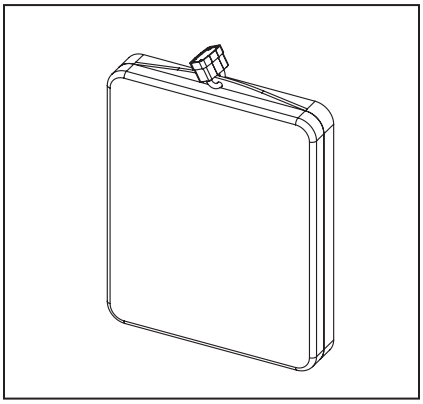

FIGURE 19: Secure Location

5.3 | ERROR ALARMS

The table below lists audible alarms that signal a potential hazard or that an interlock is functioning.

ALARM	ALERT ILLUSTRATION	MEANING
Slow Pulse	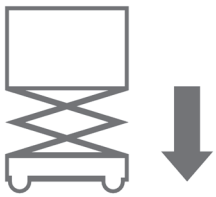	Machine is descending. Be aware of bystanders and possible obstructions.
Medium Pulse	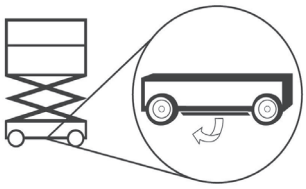	Machine Begins Elevating and Stops: Pothole Guards Not Engaged-Check for Obstruction
	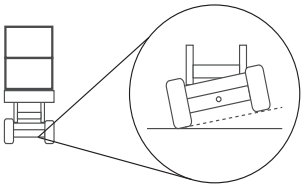	Drive Axle Not Locked-Move to Level Surface
Solid	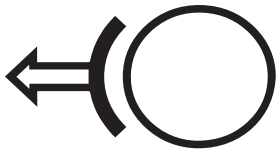	Machine will not drive: Brakes are manually released. Turn handle to engage brakes before using. OR Battery charger is plugged in. Unplug before use.
Fast 3 & Pause	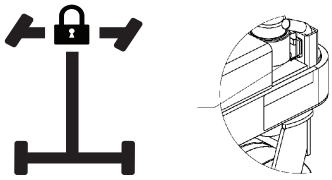	The machine is being transported on a slope. Engage the caster locks to limit movement.

5.4 | DRIVING AND STEERING

WARNING

CHECK THAT THE ROUTE OF TRAVEL TO BE TAKEN IS CLEAR OF PEOPLE, OBSTRUCTIONS, DEBRIS, HOLES, AND DROP-OFFS; AND IS CAPABLE OF SUPPORTING THE MACHINE.

Always check front steer wheel direction before driving. If there is resistance in turning the casters while pivoting the machine, steer forward to allow the casters to straighten out before turning.
For best control, distribute the load on the work platform toward the rear of the machine if possible.

To activate drive function, select drive mode using the switch on the platform control box.
To drive, hold the joystick trigger while moving the joystick. Moving the joystick will cause the machine to drive in that direction. Moving the joystick handle away from the operator will cause FORWARD travel, and pulling the joystick toward the operator will cause REVERSE travel. Moving the joystick directly to one side or the other will cause the machine to pivot. Travel speed is proportional and is controlled by the joystick. The farther it is moved, the faster the speed will be. The joystick returns to the neutral position when released.

Braking: For parking, the brake is automatically applied when the joystick is positioned in the center (neutral) position. In the event of a machine failure, the machine can be pushed by releasing the parking brake at the rear of the machine. See the "Preparation for Transport" section of this manual for brake release information.

5.5 | ELEVATING AND LOWERING

Using Upper Platform Controls
Use the key switch to on the lower controls to select the platform controls. To activate elevate/lower function, select elevate mode using the switch on the platform control box.
To drive, hold the joystick trigger while moving the joystick. Moving the joystick handle away from the operator will cause elevating, and pulling the joystick toward the operator will cause lowering. Speed is proportional and is controlled by the joystick. The farther it is moved, the faster the speed will be. The joystick returns to the neutral position when released.

Using Lower Base Controls
Use the key switch to select the lower controls. Pressing the top of the switch raises the platform, pressing the bottom lowers the platform.

5.6 | EXTENDING THE PLATFORM

1. Stand on the platform deck.
2. Grip the Slide Lock Handle to allow the deck to slide.
3. Slide the deck out to one of two locking points, one at approximately 15 in (38 cm) extension, the other at approximately 30 in (76.2 cm) extension.
4. Release the handle to keep deck in place. Be sure lock is engaged before entering.

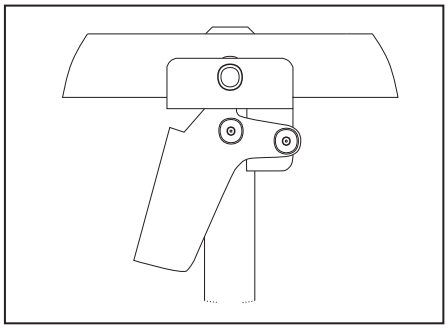

FIGURE 20: Slide Lock Handle

WARNING

CHECK THAT THE ROUTE OF TRAVEL TO BE TAKEN IS CLEAR OF PEOPLE, OBSTRUCTIONS, DEBRIS, HOLES, DROP-OFFS; AND IS CAPABLE OF SUPPORTING THE MACHINE.

WARNING

IF THE SLIDE-OUT DECK IS EXTENDED, CHECK FOR CLEARANCE UNDER AREA BEFORE LOWERING PLATFORM.

WARNING

DO NOT DRIVE UNIT WHEN STANDING ON EXTENSION. STAND ON PLATFORM BEHIND JOYSTICK.

5.7 | DAILY MAINTENANCE

Regular inspection and conscientious maintenance is important to efficient economical operation of this machine. It will help to assure that equipment will perform satisfactorily with a minimum of service and repair. Make checks at the stated intervals or more frequently if required by local operating conditions. A Pre-Start Inspection Checklist is included in this manual.

Additional maintenance for use by trained personnel is included in a separate Maintenance Manual. Refer to the Maintenance Manual for Pre-Delivery/Frequent and Monthly Checklists and replacement part information.

5.8 | CHARGING THE BATTERY

CAUTION

FAILURE TO PERFORM INSPECTIONS AND PREVENTATIVE MAINTENANCE AT RECOMMENDED INTERVALS MAY RESULT IN THE UNIT BEING OPERATED WITH DEFECTS THAT MAY RESULT IN INJURY OR DEATH OF THE OPERATOR.

This unit is equipped with 12-volt AGM maintenance-free batteries.

NOTE: The surrounding temperature greatly affects the power reserve within a battery.

EXAMPLE: A battery that is 100% charged at 80° F (27°C) drops to 65% at 32°F (0°C). At 0°F (-18°C), this battery will drop to 40% efficiency.

WARNING

BATTERIES GENERATE EXPLOSIVE GASES. KEEP SPARKS AND FLAME AWAY FROM BATTERIES. DO NOT SMOKE WHILE CHARGING.

The charger is equipped with an interlock circuit. The unit will not operate while charging. Operating while charging will shorten battery life.

To Charge:

- Park the machine on a level surface.
- Plug charger into AC outlet until charged.
- For best battery life, leave the charger plugged in until machine will be used again. The charger will maintain the battery charge.

5.9| BATTERY DISPLAYS

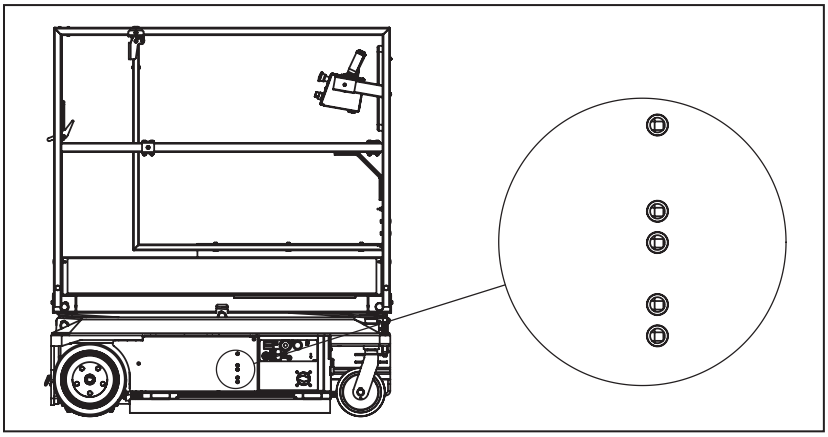

FIGURE 21: Battery Charger LED Display

How to read the battery displays

Power	Battery 1 Status: Charging	Battery 1 Status: Ready	Battery 2 Status: Charging	Battery 2 Status: Ready	
Green LED (ON)	Red LED (OFF)	Green LED (OFF)	Red LED (OFF)	Green LED (OFF)	This display indicates that the power is on but there is no connection to a battery. The charger must see approximately five (5) volts on a battery to deliver D/C current.
Green LED (ON)	Red LED (ON)	Green LED (OFF)	Red LED (ON)	Green LED (OFF)	This display indicates that power is on and that both outputs are delivering D/C current to the batteries.
Green LED (ON)	Red LED (OFF)	Green LED (ON)	Red LED (OFF)	Green LED (ON)	This display indicates that power is on and that both outputs are finished charging and are in a float maintenance mode.
Green LED (ON)	Red LED (FLASHING)	Green LED (ON)	Red LED (FLASHING)	Green LED (ON)	A flashing red light indicates there is a problem with a battery, such as low voltage or a bad cell.

WARNING

DO NOT OPERATE UNIT WHILE CHARGING.

CAUTION

NEVER ADD ACID TO BATTERY!

THIS PAGE WAS INTENTIONALLY LEFT BLANK

SECTION 6 | PRE-START INSPECTION

6.1 | PRE-START INSPECTION CHECKLIST

WARNING

THIS CHECKLIST MUST BE USED AT THE BEGINNING OF EACH SHIFT OR AFTER EVERY SIX TO EIGHT HOURS OF USE. FAILURE TO DO SO COULD AFFECT THE SAFETY OF THE OPERATOR.

MODEL NUMBER:_____ SERIAL NUMBER:_____

Keep inspection records up-to-date.

- Record and report all discrepancies to your supervisor.
- A dirty machine cannot be properly inspected.

Y — Yes/Acceptable N — No/Unacceptable R — Repaired

Description	Y	N	R
VISUAL INSPECTIONS			
There are no loose or missing parts.	☐	☐	☐
Check that warning and instructional labels are legible and secure. Ensure that load capacity is clearly marked.	☐	☐	☐
Check the platform rails and safety gate for damage.	☐	☐	☐
Platform and base controls are not missing, damaged, or disconnected.	☐	☐	☐
Electrical cables and wires are not torn, frayed, or disconnected.	☐	☐	☐
Hydraulic hoses are not torn or loose, and there are no leaks. Hoses and the cables have no worn areas or chafing.	☐	☐	☐
Check the tires for damage. Check that wheel axle retaining rings and set screw in rear wheel are tight.	☐	☐	☐
Check that all snap rings are secure in grooves on pivot pins.	☐	☐	☐
Functional Tests			
Gate closes automatically and latches (alignment can be adjusted with screw on toe board or railing if necessary).	☐	☐	☐
Platform Controls: Check all switches and push buttons for proper operation.			
Emergency Stop (Stops all movement)	☐	☐	☐
Drive & Up/Down Mode Switch (Selects drive/steer or elevate mode)	☐	☐	☐
Joystick (Return to neutral, drives forward & reverse, elevates & lowers)	☐	☐	☐
Drive Enable Trigger (Must be activated to drive)	☐	☐	☐
Base Controls: Check all switches and push buttons for proper operation.			
Emergency Stop (Stops all movement)	☐	☐	☐
Key Switch (Selects Platform Control, Ground Control, or Off)	☐	☐	☐
Up/Down Rocker Switch (Elevates, Lowers)	☐	☐	☐
Alarm (Not damaged, sounds for descent, tilt)	☐	☐	☐
Wheels: Front and rear wheels rotate freely.	☐	☐	☐
Drives in slow speed when elevated.	☐	☐	☐
Brakes: Machine stops when joystick released.	☐	☐	☐
Pothole guards deploy and lock when platform is elevated.	☐	☐	☐
Lift does not elevate when pothole guards are blocked.	☐	☐	☐

Date:_____ inspected by: _____

THIS PAGE WAS INTENTIONALLY LEFT BLANK

HY-BRID LIFTS™
BY CUSTOM EQUIPMENT LLC

Self-Propelled Aerial Work Platform
Operations & Safety Manual
HB-1230
Series III

© 2015 Custom Equipment, LLC
2647 Highway 175
Richfield, WI 53076
U.S.A.
Tel.: +1-262-644-1300
Fax: +1-262-644-1320
www.hybridlifts.com
Service@Customequipmentlifts.com

"Hy-Brid Lifts" is a trademark of Custom Equipment, LLC.
These machines comply with specified ANSI/SIA A92.6

Revision Date: April 2015

Printed In The USA